Certification Test Report
Non-Confidential business Information (Non-CBI)
Central Boiler, Inc.
Wood-Fired Hydronic Heater
Model: Classic Edge 760

Prepared for:	Central Boiler, Inc. 20502 160th Street Greenbush, MN 56726
Prepared by:	OMNI-Test Laboratories, Inc. 13327 NE Airport Way Portland, OR 97230 (503) 643-3788
Test Period:	8/7/2019 – 8/27/2019
Report Date:	October 31, 2019
Report Number:	0117WB039E

All data and information contained in this report are confidential and proprietary to Central Boiler, Inc.. Its significance is subject to the adequacy and representative character of the samples and to the comprehensiveness of the tests, examinations, or surveys made. The contents of this report cannot be copied or quoted, except in full, without specific, written authorization from Central Boiler, Inc. and OMNI-Test Laboratories, Inc. No use of the OMNI-Test Laboratories, Inc. name, logo, or registered mark (O-TL) is permitted, except as expressly authorized by OMNI-Test Laboratories, Inc. in writing.

- Document Edition # 001 (11/06/19) -

AUTHORIZED SIGNATORIES

This report has been reviewed and approved by the following authorized signatories:

Technician:

Bruce Davis, Technician
OMNI-Test Laboratories, Inc.

QA Review:

Alex Tiegs, QA Administrator
OMNI-Test Laboratories, Inc.

TABLE OF CONTENTS

PREFACE ..... (3 pages)

1. INTRODUCTION/APPLIANCE DESCRIPTION/PHOTOGRAPHS/DRAWINGS 4
   - Introduction 5
   - Individual Run Summary 6
   - Appliance Description 8
   - Photographs 9
   - Test Equipment Schematic 12

2. QUALITY ASSURANCE/QUALITY CONTROL 13
   - Sample Analysis 15
   - Calibrations 27

3. OWNER'S MANUAL 47

4. TEST DATA BY RUN 117
   - Run 1 119
   - Run 2 148
   - Run 3 193
   - Run 4 269

5. TESTING PROCEDURES AND RESULTS 390

   Summary Tables
   - Table 1a – Data Summary Part A 391
   - Table 1b – Data Summary Part B 391
   - Table 1c – Hang Tag Information 392
   - Table 2b – Year-Round Use Weighting 392
   - Test Results and Discussion 393

6. EXAMPLE CALCULATIONS 394

Section 1

Introduction/Appliance Description/Photographs/Drawings

INTRODUCTION

Central Boiler, Inc. retained OMNI-Test Laboratories, Inc. (*OMNI*) to perform certification emissions testing on the Classic Edge 760 boiler in accordance with U.S. EPA 40 CFR Part 60, Subpart QQQQ – Standards of Performance for New Residential Hydronic Heaters and Forced-Air Furnaces. The Classic Edge 760 furnace when tested with Oak cord wood meets the 2020 particulate matter emission limit of a weighted average 0.15 lbs/mmBtu heat output and a maximum emissions limit per individual category 0.15 lbs/mmBtu heat output.

Emissions (lb/mmbtu output)	
Heating Season	0.10
Year-Round Use	0.10

The testing was performed at *OMNI*'s testing facility in Portland, Oregon. The unit was received in good condition and logged in on August 6, 2019 then assigned and labeled with *OMNI* ID #2383. *OMNI* representatives Bruce Davis conducted the certification testing and completed all testing by August 27, 2019.

The unit was conditioned for 48 hours prior to testing by operating it at a Category III heat output rate.

The testing method used is composed of four distinct aspects:

- **Particulate Matter Emissions**: Particulate matter sampling using a dilution tunnel via ASTM E2618-13, and ASTM E2515-11
- **Delivered Efficiency**: Using entering and exiting water temperature differences along with measured flow rate to determine useful heat output.
- **Thermal Efficiency and CO Emissions**: Measured using sections 13.7 through 13.10 of CSA B415-10.
- **Operation**: As dictated by ASTM E2618, the appliance is brought to operating temperature before adding the test fuel charge, providing for a hot-to-hot test cycle with measurements taken under constant heat draw conditions within pre-determined ranges. There is no attempt to modulate heat demand to simulate an indoor thermostat cycling on and off in response to changes in the indoor environment.

Four test categories are used within the "Operation" scope:

- **Category I**: Heat Output less than 15% of Manufacturer's Rated Heat Output Capacity
- **Category II**: Heat Output 16 To 24% of Manufacturer's Rated Heat Output Capacity
- **Category III**: Heat Output 25 To 50% of Manufacturer's Rated Heat Output Capacity
- **Category IV**: Manufacturer's Rated Heat Output Capacity

This test report shall not be reproduced, except in full, without written approval from *OMNI*. The test results presented herein apply only to the specific appliance tested.

INDIVIDUAL RUN SUMMARIES – Certification Testing

Run 1 - Test procedures followed to produce a Category IV burn; heat draw was adjusted to approximately 230,000 BTU's. Observed burn rate was calculated at 14.48 kg/h. Emissions results were calculated using particulate sampling from Oak cordwood, on a hot to hot cycle. Heat demand water temperature set to call for heat at 165 degrees Fahrenheit and to go off demand mode at 185 degrees Fahrenheit.

During a CAT IV burn test, large amounts of water vapor are released into the dilution tunnel causing plugging of the 47 mm sample filters. If not caught right away, sample rates are reduced to a point that cause proportionate rates to fall outside the specified range. During this test, two 10-minute data points were calculated to be outside the specified limit for proportional rate.

Total test time of the CAT IV test was 419 minutes, total emission catch on filter train B was 26.0 mg. This calculates to 0.062 milligrams of catch per minute, total time proportional rates were out of specified range was 17 minutes. This calculates to 1.054 (17 * 0.062) milligrams of catch that are affected by the reduced sample rate. Emissions results for the CAT IV test with the 17 minutes of proportional rates outside specified limits is 0.08 lb/mmBTU output. If the calculated emissions catch of 1.054 mg affected by the proportional rates is multiplied by a factor of 3 (3 * 1.054) and added to the final catch this only increases final emissions results to 0.09 lb/mmBTU output. It was determined that emissions would have required to increase by 19 times during the 17 minutes to cause the emissions results to exceed 0.15 lb/mmBTU output. Carbon Monoxide emissions during the same 17-minute time period reflect clean combustion.

Based on these findings the CAT IV test was deemed acceptable for inclusion into the weighted average.

No additional sampling anomalies occurred, this test run was determined to be valid for inclusion in the weighted average.

Run 2 - Test procedures followed to produce a Category III burn; heat draw was adjusted to approximately 108,000 BTU's. Heat demand water temperature set to call for heat at 165 degrees Fahrenheit and to go off demand mode at 185 degrees Fahrenheit. Observed burn rate was calculated at 6.64 kg/h. Emissions results were calculated using particulate sampling from Oak cordwood, on a hot to hot cycle. No sampling anomalies occurred, this test run was determined to be valid for inclusion in the weighted average.

Run 3 - Test procedures followed to produce a Category II burn; heat draw was adjusted to approximately 54,000 BTU's. Heat demand water temperature set to call for heat at 165 degrees Fahrenheit and to go off demand mode at 185 degrees Fahrenheit. Observed burn rate was calculated at 3.56 kg/h. Emissions results were calculated using particulate sampling from Oak cordwood, on a hot to hot cycle. No sampling anomalies occurred, this test run was determined to be valid for inclusion in the weighted average.

Run 4 - Test procedures followed to produce a Category I burn; heat draw was adjusted to approximately 34,000 BTU's. Heat demand water temperature set to call for heat at 165 degrees Fahrenheit and to go off demand mode at 185 degrees Fahrenheit. Observed burn rate was calculated at 2.19 kg/h. Emissions results were calculated using particulate sampling from Oak cordwood, on a hot to hot cycle. No sampling anomalies occurred, this test run was determined to be valid for inclusion in the weighted average.

APPLIANCE DESCRIPTION

The Classic Edge 760 is a wood fired outdoor hydronic heater. It is designed to heat and circulate water in a closed loop, supplying energy to an existing system. Its heavy gauge steel structure consists of a large, roughly rectangular firebox constructed of either carbon steel or titanium enhanced stainless steel, and is surrounded by a water jacket with an integrated heat exchanger. The unit is well insulated and protected by an outer sheet metal skin designed for outdoor installation.

Combustion air is regulated by a blower and multiple dampers which supply air to various parts of the firebox. Airflow through the firebox is "downdraft." This means that when operating properly, this design gasifies the wood fuel in the upper portion of the firebox, and burns this gas below the grate in the lower portion of the firebox. Flue gasses are routed through the heat exchanger and exit through an 8" flue opening at the rear of the unit.

The Classic Edge 760 responds to heat demand by cycling the combustion blower on and off depending on water temperature. Combustion air dampers actuate in response to combustion gas temperature in order to promote low emissions output and efficient operation. The water temperature set point is user adjustable.

Other features of the Classic Edge 760 include:

- Overtemperature protection
- Atmospheric pressure vent for water circuit
- Network-enabled temperature logging
- Gasification chamber access door

The firebox of the Classic Edge 760 is approximately 37.8" deep, 26" wide, and 45.3" high. Firebox volume is 23.2 ft^3. The dry weight of the unit is 2186 lb and the approximate capacity of the water jacket is 330 gallons.

Central Boiler, Inc.
Classic Edge 750

Appliance Front

Appliance Right

Appliance Back

Typical Preburn Fuel

Run 1 Fuel

Missing File

Run 1 Fuel – Loaded

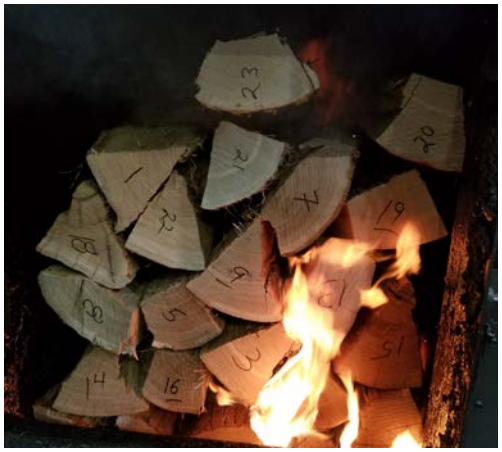

Run 2 Fuel

Run 2 Fuel – Loaded

Run 3 Fuel

Run 3 Fuel – Loaded

Run 4 Fuel

Run 4 Fuel – Loaded

Test Equipment Schematic

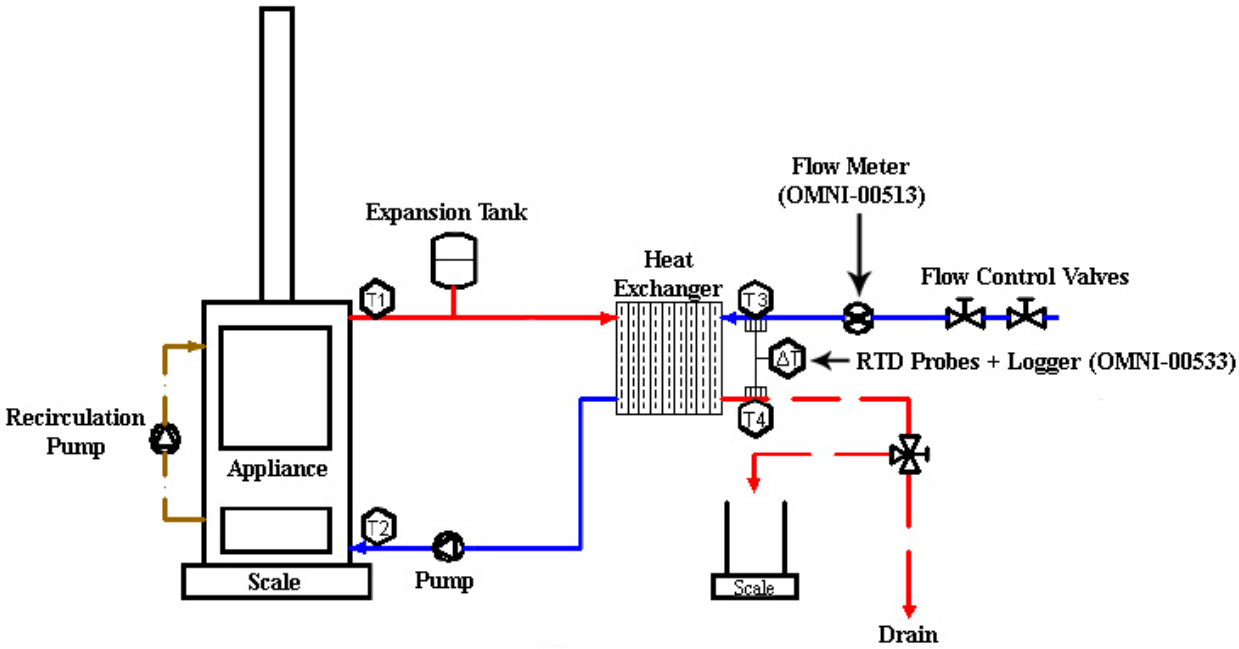

Section 2

Quality Assurance/Quality Control

QUALITY ASSURANCE/QUALITY CONTROL

OMNI follows the guidelines of ISO/IEC 17025, "General Requirements for the Competence of Testing and Calibration Laboratories," and the quality assurance/quality control (QA/QC) procedures found in *OMNI*'s Quality Assurance Manual.

OMNI's scope of accreditation includes, but is not limited to, the following:

- ANSI (American National Standards Institute) for certification of product to safety standards.
- To perform product safety testing by the International Accreditation Service, Inc. (formerly ICBO ES) under accreditation as a testing laboratory designated TL-130.
- To perform product safety testing as a "Certification Organization" by the Standards Council of Canada (SCC).
- Serving as a testing laboratory for the certification of wood heaters by the U.S. Environmental Protection Agency.

This report is issued within the scope of *OMNI*'s accreditation. Accreditation certificates are available upon request.

The manufacturing facilities and quality control system for the production of the Classic Edge 760 at Central Boiler's manufacturing facility were evaluated to determine if sufficient to maintain conformance with OMNI's requirements for product certification. OMNI has concluded that the manufacturing facilities, processes, and quality control system are adequate to produce the appliance congruous with the standards and model codes to which it was evaluated.

This report shall not be reproduced, except in full, without the written approval of OMNI-Test Laboratories, Inc.

Sample Analysis

Analysis Worksheets

Tared Filter, Probe, & O-Ring Data

D870

OMNI-Test Laboratories, Inc.

ASTM E2618 Wood Heater Run Sheets

Client: Central Boiler Project Number: 0117WB039E Run Number: 1
Model: Edge 760 Tracking Number: 2383 Date: 8/7/19
Test Crew: B Davis
OMNI Equipment ID numbers: 637, 283A, 592

ASTM E2515 Lab Sheet

Assembled By: B Davis

Date/Time in Dessicator: 8/8/19 0840

	Weighing #1	Weighing #2	Weighing #3	Weighing #4	Weighing #5
Date/Time:	8/12/19 0850	8/16/19 0910	8/22/19 1312		
R/H %:	17.4	14.4	18.6		
Temp:	75.0	75.6	73.9		
200 mg Audit:	200.0	200.0	200.0		
2 g Audit:	2000.0	2000.0	2000.1		
100 g Audit:	99997.8	99997.9	99997.9		
Initials:	BA	BL	BA		

Train	Element	ID #	Tare (mg)	Weight (mg)	Weight (mg)	Weight (mg)	Weight (mg)	Weight (mg)
A (First Hour)	Front Filter	D854	121.3	124.3	124.1	✓		
	Rear Filter							
	Probe							
	O-Ring Set							
A (Remainder)	Front Filter	D855	121.3	130.6	130.0	130.0	✓	
	Rear Filter	D856	120.4	120.6	120.4	✓		
	Probe	OES 4	114146.4	114148.1	114148.2	✓		
	O-Ring Set	R840	3357.4	3357.4	3357.4	✓		
B	Front Filter	D857	117.2	127.3	126.4	126.6	✓	
	Rear Filter	D858	118.2	122.0	121.7	121.8	✓	
	Probe	12	114283.6	114284.9	114285.0	✓		
	O-Ring Set	R841	4277.4	4278.2	4277.8	4277.7	✓	
BG	Filter	D859	117.4	117.9	117.6	117.8	✓	
A	~~D860~~ D861 Filter	D860 D861	118.2 118.5	119.6 129.8	119.3 130.0	119.3	✓	
B	Filter	D862 D863	118.9 117.2	120.0 128.2	119.5 127.9	119.6 127.8	✓	

Technician Signature: [signature] Date: 10/24/19

D871

OMNI-Test Laboratories, Inc.

ASTM E2618 Wood Heater Run Sheets

Client: Central Boiler Project Number: 0117WB039E Run Number: 2
Model: Edge 760 Tracking Number: 2383 Date: 8/8/19
Test Crew: B Davis
OMNI Equipment ID numbers: 637, 2834, 592

ASTM E2515 Lab Sheet

Assembled By: B Davis

Date/Time in Dessicator: 8/9/19 1210

	Weighing #1	Weighing #2	Weighing #3	Weighing #4	Weighing #5
Date/Time:	8/12/19 0850	8/16/19 0940	8/22/19 1312		
R/H %:	17.4	12.8	18.6		
Temp:	75.0	75.2	73.9		
200 mg Audit:	200.0	200.1	200.0		
2 g Audit:	2000.0	2000.0	2000.1		
100 g Audit:	99997.8	99997.9	99997.9		
Initials:	BL	BL	BL		

Train	Element	ID #	Tare (mg)	Weight (mg)	Weight (mg)	Weight (mg)	Weight (mg)	Weight (mg)
A (First Hour)	Front Filter	D864	119.0	119.8	119.7	✓		
	Rear Filter							
	Probe							
	O-Ring Set							
A (Remainder)	Front Filter	D865	118.0	138.6	140.6	140.8	✓	
	Rear Filter	D866	119.1	119.9	119.8	✓		
	Probe	11	114185.6	114187.4	114187.5	✓		
	O-Ring Set	R851	3385.2	3388.3	3387.8	3387.6	✓	
B	Front Filter	D867	117.5	140.5	140.7	✓		
	Rear Filter	D868	118.3	119.0	118.7	118.7	✓	
	Probe	14	1145473	114549.0	114549.1	✓		
	O-Ring Set	R852	3580.2	3581.7	3581.4	3581.2	✓	
BG	Filter	D869	118.9	118.9	119.0	✓		
Train A	Filter	D870	117.9	122.5	122.7	✓		
Train B	Filter	D871	119.1	123.7	123.9	✓		

Technician Signature: B D— Date: 10/24/19

OMNI-Test Laboratories, Inc.

ASTM E2618 Wood Heater Run Sheets

Client: Central Boiler Project Number: 0117WB Run Number: 3
Model: Edge 760 Tracking Number: 2383 Date: 8/13/19
Test Crew: BD
OMNI Equipment ID numbers: 637, 203A, 592

ASTM E2515 Lab Sheet

Assembled By: BD

Date/Time in Dessicator: 8/15/19 0825

	Weighing #1	Weighing #2	Weighing #3	Weighing #4	Weighing #5
Date/Time:	8/16/19 0916	8/22/19 1312	8/23/19 0845	8/23/19 0830	
R/H %:	14.4	18.6	21.1	17.9	
Temp:	75.6	73.9	74.6	75.5	
200 mg Audit:	200.0	200.0	199.9	200.0	
2 g Audit:	2000.0	2000.1	2000.3	2000.1	
100 g Audit:	99997.9	99997.9	99997.9	99997.9	
Initials:	BL	BL	BL	BL	

Train	Element	ID #	Tare (mg)	Weight (mg)	Weight (mg)	Weight (mg)	Weight (mg)	Weight (mg)
A (First Hour)	Front Filter	D872	118.7	118.8	118.7	✓		
	Rear Filter							
	Probe							
	O-Ring Set							
A (Remainder)	Front Filter	D873	118.0	132.0	131.6	130.2	130.1	✓
	Rear Filter	D874	119.0	119.5	119.6	✓		
	Probe	17	114561.2	114562.9	114562.7	✓		
	O-Ring Set	R853	3621.9	3623.6	3622.9	3623.0	✓	
B	Front Filter	D875	118.0	131.9	131.7	✓		
	Rear Filter	D876	119.0	119.7	119.5	✓		
	Probe	18	114401.8	114403.3	114403.2	✓		
	O-Ring Set	R854	3350.6	3352.3	3351.8	3351.7	✓	
BG	Filter	D877	119.0	119.0	119.1	✓		
A		D878	119.5	132.8	132.9	✓		
B		D879	119.3	131.8	131.9	✓		

Technician Signature: BD Date: 10/24/19

OMNI-Test Laboratories, Inc.

ASTM E2618 Wood Heater Run Sheets

Client: Central Boiler Project Number: 0117WB Run Number: 4
Model: Edge 760 Tracking Number: 2383 Date: 8/27/19
Test Crew: B Davis
OMNI Equipment ID numbers: 637, 2831, 592

ASTM E2515 Lab Sheet

Assembled By:

Date/Time in Dessicator: 0925 8/30/19

	Weighing #1	Weighing #2	Weighing #3	Weighing #4	Weighing #5
Date/Time:	9/3/19 0850	9/5/19 0832	9/6/19 0800		
R/H %:	19.8	19.6	20.7		
Temp:	76.2	75.9	76.1		
200 mg Audit:	200.2	200.1	200.1		
2 g Audit:	2000.0	2000.0	2000.0		
100 g Audit:	99997.8	99997.8	99997.8		
Initials:	BC	BC	BC		

Train	Element	ID #	Tare (mg)	Weight (mg)	Weight (mg)	Weight (mg)	Weight (mg)	Weight (mg)
A (First Hour)	Front Filter	D886	117.2	117.0	117.2	✓		
	Rear Filter							
	Probe							
	O-Ring Set							
A (Remainder)	Front Filter	D887	118.2	137.6	137.7	✓		
	Rear Filter	D888	117.4	117.9	117.9	✓		
	Probe	27	114273.7	114275.7	114275.9	✓		
	O-Ring Set	R857	4070.0	4071.1	4071.0	✓		
B	Front Filter	D889	118.7	136.5	136.6	✓		
	Rear Filter	D890	118.4	118.7	118.5	✓		
	Probe	28	114750.2	114752.6	114752.8	✓		
	O-Ring Set	R858	3290.8	3292.2	3292.1	✓		
BG	Filter	D891	118.3	119.0	118.9	✓		
A	Filter	D893	116.8	129.7	129.3	129.4	✓	
B	Filter	D892	119.1	131.8	132.0	✓		

Technician Signature: Date: 10/24/19

Tare Sheet: (check one) **Probes**_____ **47mm Filters** X **100mm Filters**_____ **O-Ring Pair**_____

Prepared By: Balance ID #: OMNI-00037 Thermohygrometer ID #: OMNI-00592 Audit Weight ID #/Mass: OMNI-00283A / 200 mg

Placed in Dessicator: Date: 6-21-19 Time: 4:00	Date: 6/27/19 Time: 1825 RH %: 14.6 T (°F): 74.5 Audit: 200.0	Date: 6/28/19 Time: 16:30 RH %: 24 T (°F): 73.6 Audit: 200.1	Date: 6/29/19 Time: 08:00 RH %: 32 T (°F): 72.8 Audit: 200.1	Date: Time: RH %: T (°F): Audit:	Date Used	Project Number	Run No.
ID #							
D845	120.5	120.7					
D846	120.9	120.8					
D847	121.3	121.2					
D848	122.1	122.0					
D849	122.3	122.1					
D850	121.7	121.7					
D851	121.1	121.1					
D852	119.9	119.8					
D853	122.2	122.0					
D854	121.5	121.3			8-7-19	0117WB	1
D855	121.2	121.3					
D856	120.7	120.4	120.4				
D857	117.3	117.2					
D858	118.3	118.0	118.2				
D859	117.4	117.4					
D860	118.4	118.2					
D861	118.7	118.5					
D862	118.9	118.9					
D863	117.3	117.2					
D864	118.8	119.0			8-8-19	0117WB	2
	Initials: BR	Initials: lh	Initials: lh	Initials:			

Final Technician Signature: B O [illegible] Date: 8/12/19 Evaluator signature: [illegible]

Control No. P-SFDP-0002.xls, Effective date: 2/1/2017

Tare Sheet: (check one) **Probes**_____ **47mm Filters**✓ **100mm Filters**_____ **O-Ring Pair**_____

Prepared By: B Davis Balance ID #: Omni-00637 Thermohygrometer ID #: Omni-00592 Audit Weight ID #/Mass: Omni-00283A 1 200 mg

Placed in Dessicator: Date: 7/29/19 Time: 16:00	Date: 7/30/19 Time: 1615 RH %: 15.8 T (°F): 77.8 Audit: 200.1	Date: 7/31/19 Time: 0840 RH %: 10.8 T (°F): 76.2 Audit: 200.1	Date: Time: RH %: T (°F): Audit:	Date: Time: RH %: T (°F): Audit:	Date Used	Project Number	Run No.
ID #							
D865	118.0	118.0	–		8-8-19	0117WB039E	2
D866	118.9	119.1	–				
D867	117.4	117.5	–				
D868	118.8	118.3	–				
D869	118.9	118.9	–				
D870	117.9	117.9	–				
D871	119.1	119.1	–				
D872	118.8	118.7	–		8/13/19	0117WB039E	3
D873	117.9	118.0	–				
D874	119.1	119.0	–				
D875	117.9	118.0	–				
D876	119.1	119.0	–				
D877	119.0	119.0	–				
D878	119.6	119.5	–				
D879	119.5	119.3	–				
D880	118.9	119.0	–				
D881	118.6	118.4	–				
D882	119.0	118.9	–				
D883	118.2	118.0	–				
D884	118.5	118.6	–				
	Initials: BD	Initials: BD	Initials:	Initials:			

Final Technician Signature: B D Date: 8/12/19 Evaluator signature: J. L. Morgan

Control No. P-SFDP-0002.xls, Effective date: 2/1/2017

Tare Sheet: (check one) **Probes**_____ **47mm Filters** ✓ **100mm Filters**_____ **O-Ring Pair**_____

Prepared By: B Davis Balance ID #: Omni-00637 Thermohygrometer ID #: Omni-00592 Audit Weight ID #/Mass: Omni-00283A / 200 mg

Placed in Dessicator: Date: 8/12/19 Time: 0825	Date: 8/13/19 Time: 0840 RH %: 18.3 T (°F): 75.5 Audit: 200.0	Date: 8/16/19 Time: 0930 RH %: 12.8 T (°F): 75.2 Audit: 200.1	Date: 8/19/19 Time: 0837 RH %: 23.1 T (°F): 75.5 Audit: 200.1	Date: Time: RH %: T (°F): Audit:	Date Used	Project Number	Run No.
ID #							
D885	118.2	118.0	✓				
D886	117.1	117.2	✓		8/27/19	0117UB039E	4
D887	118.2	118.2	✓				
D888	117.5	117.4	✓				
D889	118.6	118.7	✓				
D890	118.4	118.4	✓				
D891	118.4	118.3	✓				
D892	118.9	119.1	✓				
D893	116.8	116.8	✓				
D894	119.5	119.5	✓				
D895	117.7	117.8	✓				
D896	118.4	118.9	118.8	✓			
D897	116.8	116.9	✓				
D898	118.0	118.0	✓				
D899	117.9	117.7	✓				
D900	118.1	118.0	✓				
D901	117.6	117.7	✓				
D902	118.1	118.0	✓				
D903	118.0	117.8	✓				
D904	117.9	118.0	✓				
	Initials: BR	Initials: BR	Initials: BR	Initials:			

Final Technician Signature: [signature] Date: 8/19/19 Evaluator signature: [signature]

Tare Sheet: (check one) **Probes** ✓ **47mm Filters**____ **100mm Filters**____ **O-Ring Pair**____

Prepared By: B Davis Balance ID #: omni-00637 Thermohygrometer ID #: omni-00592 Audit Weight ID #/Mass: omni-00283A 1100g

Placed in Dessicator: Date: 7/9/19 Time: 0845	Date: 7/10/19 Time: 10:05 RH %: 19.8 T (°F): 75.4 Audit: 99997.8	Date: 7/11/19 Time: 0916 RH %: 23.1 T (°F): 76.6 Audit: 99997.8	Date: 7/15/19 Time: 10:10 RH %: 20.7 T (°F): 76.6 Audit: 99997.9	Date: Time: RH %: T (°F): Audit:	Date Used	Project Number	Run No.
ID #							
OES 4	114147.0	114146.2	114146.4	✓	8-7-19	0117WB039E	1
OES 5	113570.6	113570.6	✓				
OES 6	113710.1	113709.1	113709.8			Not USED	
11	114185.6	114185.6	✓		8-8-19	0117WB039E	2
12	114284.0	114283.4	114283.6	✓	8-7-19	0	1
14	114547.4	114547.1	114547.3	✓	8-8-19		2
15	114340.6	114340.6	✓				
16	114266.8	114266.3	114266.6			Not USED	
17	114561.4	114561.0	114561.2	✓	8-13-19	0117WB039E	3
18	114402.0	114401.6	114401.8	✓			
20	114253.7	114253.4	114253.6	✓			
21	114392.3	114391.5	✓				
22	114343.3	114343.4	✓				
13	114322.4	114321.8	114322.0	✓			
	Initials: BR	Initials: B	Initials: BR	Initials:			

Final Technician Signature: B Davis Date: 9/27/19 Evaluator signature: [illegible]

Tare Sheet: (check one) **Probes** ✓ **47mm Filters**____ **100mm Filters**____ **O-Ring Pair**____

Prepared By: B Davis Balance ID #: ~~OMNI-002783A~~ 00637 Thermohygrometer ID #: OMNI-00592 Audit Weight ID #/Mass: OMNI-002834 / 100g

Placed in Dessicator: Date: 7/31/19 Time: 0910	Date: 8-1-19 Time: 1040 RH %: 15.6 T (°F): 76.6	Date: 8-2-19 Time: 0825 RH %: 14.2 T (°F): 77.7	Date: 8-5-19 Time: 0906 RH %: 16.4 T (°F): 75.3	Date: Time: RH %: T (°F):	Date Used	Project Number	Run No.
ID #	Audit: 99997.9	Audit: 99997.8	Audit: 99997.8	Audit:			
3	116011.9	116011.7	✓				
OEs 3	114769.0	114769.1	✓				
21	114393.0	114392.8	✓				
24	114127.5	114127.0	114126.8	✓			
27	114273.9	114273.7	✓		8/27/19	0117WB039E	4
28	114750.4	114750.2	✓		↓	↓	↓
29	114279.1	114279.2	✓				
31	114367.3	114367.5	✓				
32	114741.5	114741.7	✓				
33	113944.4	113944.3	✓				
35	114326.4	114326.4	✓				
59	117786.1	117786.3	✓				
	Initials: BD	Initials: BD	Initials: BA	Initials:			

Final Technician Signature: B Davis Date: 8/2/19 Evaluator signature: Thy. Morgan

Tare Sheet: (check one) **Probes**_____ **47mm Filters**_____ **100mm Filters**_____ **O-Ring Pair** ✓

Prepared By: B Davis Balance ID #: omni-00637 Thermohygrometer ID #: omni-00592 Audit Weight ID #/Mass: omni-00283A 1.5 g

Placed in Dessicator: Date: 7/9/19 Time: 0910	Date: 7/10/19 Time: 0935 RH %: 19.2 T (°F): 75.2	Date: 7/11/19 Time: 0920 RH %: 20.7 T (°F): 76.6	Date: 7/15/19 Time: 10:20 RH %: 20.7 T (°F): 76.6	Date: 07/17/19 Time: 8:55 RH %: 23.7 T (°F): 76.4	8-1-19 1045 10.2 76.5		
ID #	Audit: 5000.0	Audit: 5000.0	Audit: 5000.0	Audit: 5000.0	Date Used 5000.1	Project Number	Run No.
R840	3360.1	3358.7	3357.4	3357.4 ✓	8-7-19	0117LB039E	1
R841	4277.4	4277.4			8-7-19	↓	1
R842	3364.3	3362.9	3361.7	3361.8 ✓			
R843	4125.2	4124.4	4123.7	4123.4	4123.2		
R844	3359.1	3358.2	3356.7	3356.7 ✓			
R845	3287.0	3285.9	3285.0	3285.0 ✓			
R846	3335.2	3334.4	3333.3	3333.5 ✓	Not used		
R847	4081.9	4081.1	4080.3	4080.3 ✓	↓		
R848	4108.3	4107.6	4106.8	4106.6 ✓			
R849	3389.1	3387.7	3385.9	3385.9 ✓			
R850	3314.0	3312.9	3311.7	3311.7 ✓			
	Initials: BD	Initials: MM	Initials: AK	Initials: MM	BD		

Final Technician Signature: B D Date: 8/1/19 Evaluator signature: K. J. Morgan

Control No. P-SFDP-0002.xls, Effective date: 2/1/2017

Tare Sheet: (check one) **Probes**_____ **47mm Filters**_____ **100mm Filters**_____ **O-Ring Pair** ✓

Prepared By: B Daus Balance ID #: omni-00637 Thermohygrometer ID #: omni-00592 Audit Weight ID #/Mass: omni-00283A 1 5g

Placed in Dessicator: Date: 8/2/19 Time: 0825	Date: 8/6/19 Time: 0854 RH %: 8.7 T (°F): 77.7 Audit: 5000.0	Date: 8/7/19 Time: 1048 RH %: 11.1 T (°F): 76.6 Audit: 5000.0	Date: Time: RH %: T (°F): Audit:	Date: Time: RH %: T (°F): Audit:	Date Used	Project Number	Run No.
ID #							
R851	3385.1	3385.2	✓		8-8-19	0117WB039C	2
R852	3580.3	3580.2	✓		↓	↓	2
R853	3621.8	3621.9	✓		8/13/19	↓	3
R854	3350.8	3350.6	✓		8 ↓	↓	3
R855	3373.7	3373.7	✓				
R856	3308.0	3307.9	✓				
R857	4070.0	4070.0	✓				
R858	3290.6	3290.8	✓				
R859	4082.6	4082.4	✓				
R860	3572.5	3572.4	✓				
R861	3290.6	3290.7	✓				
R862	3470.5	3470.5	✓				
R863	3385.6	3385.8	✓				
~~R864~~		~~3349.6~~					
R865	3412.3	3412.3	✓				
R866	4119.6	4119.4	✓				
	Initials: BD	Initials: BD	Initials:	Initials:			

Final Technician Signature: B D Date: 8/7/19 Evaluator signature: K J. Morgan

Calibrations

ID #	Equipment Name/Description	Attachment Type
637	Balance, Analytical - Mettler Instrument	Calibration Certificate
283A	Weight Standard set	Calibration Certificate
132	Weight Standard, 10 lb. - WeightMaker	Calibration Log
650	Barometer	Calibration Certificate
296-T59	DeWalt 16' Tape Measure	Calibration Log
340	Delmhorst Wood Moisture Meter	None*
592	Hygrometer/Thermometer, Digital - Omega	Calibration Certificate
353	Scale, Platform – Fuel Scale	Calibration Log
356	Scale, Pro-Dec (5000 lbs.) - Avery Weigh-Tronix	Calibration Certificate
410	Microtector	Calibration Certificate
413	Dry Gas Meter	Calibration Log
419	Infrared gas analyzer	Manual Cover
325	Sampling Box, Automated Emissions - Apex XC-60	Calibration Log
326	Sampling Box, Automated Emissions - Apex XC-60	Calibration Log
431	Wood Moisture Meter Calibrator	Calibration Log
513	Omega Low Flow Magmeter	Calibration Log
559	Dwyer Vaneometer	Manual

Certificate of Calibration

Certificate Number: **704810**

JJ Calibrations, Inc.
7007 SE Lake Rd
Portland, OR 97267-2105
Phone 503.786.3005
FAX 503.786.2994

OnSite

ACCREDITED
0723.01
Calibration

Omni-Test Laboratories
13327 NE Airport Way
Portland, OR 97230

PO: **190241**
Order Date: 07/10/2019
Authorized By: **N/A**

Property #: OMNI-00637
User: N/A
Department: N/A
Make: Mettler Toledo
Model: MS104TS/00
Serial #: B729400181
Description: Analytical Scale, 120g
Procedure: DCN 500887
Accuracy: ±0.0005g

Calibrated on: 07/10/2019
*Recommended Due: 01/10/2020
Environment: 21 °C 39 % RH
* As Received: Within Tolerance
* As Returned: Within Tolerance
Action Taken: Calibrated
Technician: **111**

Remarks: * Many factors may cause the unit to drift out of calibration before the recommended due date. Any reported error is the absolute value between the reference and the unit. Uncertainties include the effects of the unit.

Standards Used

Std ID	Manufacturer	Model	Nomenclature	Due Date	Trace ID
723A	Rice Lake	1mg-200g (Class 0)	Mass Set,	05/22/2020	694890

Measurement Data

Parameter / Measurement Description	Range Unit	Reference	Min	Max	*Error	UUT	Uncertainty Accredited = ✓
Before/After							
Force							
	g	10.00000	9.9995	10.0005	0.0000	10.0000 g	1.2E-05 ✓
	g	30.00000	29.9995	30.0005	0.0000	30.0000 g	1.3E-05 ✓
	g	60.00000	59.9995	60.0005	0.0001	60.0001 g	1.8E-05 ✓
	g	90.00000	89.9995	90.0005	0.0000	90.0000 g	2.1E-05 ✓
	g	120.00000	119.9995	120.0005	0.0001	119.9999 g	2.9E-05 ✓

JJ Calibrations, Inc. certifies that this instrument has been calibrated in accordance with the JJ Calibrations Quality Assurance Manual with the stated procedure using standards that are traceable to the National Institute of Standards and Technology (NIST), or other National Measurement Institutes (NMI's), or by using natural physical constants, intrinsic standards or ratio calibration techniques. The quality system and this certificate are in compliance with ANSI/NCSL Z540-1-1994, ISO/IEC 17025-2005, ISO 10012-1, the ISO 9000 family and QS 9000. The expanded uncertainties of measurements for this calibration are based upon 95% (2 sigma) confidence limits. Unless otherwise stated, a test accuracy ratio (TAR) of 4:1, if achievable, is maintained. The results reported herein apply only to the calibration of the item described above. This report may not be reproduced, except in full, without prior written consent of JJ Calibrations, Inc.
JJ Calibrations, Inc. quality system has been assessed and accredited to ISO/IEC 17025:2005.

Reviewer

3 Issued 07/12/2019 Rev # 15

Inspector

Certificate of Calibration

Certificate Number: **685888**

JJ Calibrations, Inc.
7007 SE Lake Rd
Portland, OR 97267-2105
Phone 503.786.3005
FAX 503.786.2994

Omni-Test Laboratories
13327 NE Airport Way
Portland, OR 97230

ACCREDITED
0723.01
Calibration

PO: **180188**
Order Date: 10/09/2018
Authorized By: **N/A**

Property #: OMNI-00283A
User: N/A
Department: N/A
Make: Troemner Inc
Model: 1mg-100g (Class F)
Serial #: 47883
Description: Mass Set, 21pc
Procedure: DCN 500901
Accuracy: Class F

Calibrated on: 10/26/2018
*Recommended Due: 10/26/2023
Environment: **20** °C **57** % RH
* As Received: Within Tolerance
* As Returned: Within Tolerance
Action Taken: Calibrated
Technician: **139**

Remarks: * Many factors may cause the unit to drift out of calibration before the recommended due date. Any reported error is the absolute value between the reference and the unit. Uncertainties include the effects of the unit.

This set meets Class F specifications.
Received and returned eight (8) masses in a black case secured by a rubber band.

Standards Used

Std ID	Manufacturer	Model	Nomenclature	Due Date	Trace ID
723A	Rice Lake	1mg-200g (Class 0)	Mass Set,	03/23/2019	668240
800A	Sartorius	MSA225W100DI	Analytical Balance	12/11/2018	663857

Measurement Data

Parameter / Measurement Description	Range Unit	Reference	Min	Max	ᵏError	UUT	Uncertainty
Before/After							Accredited = ✓
Mass							
Dot	200 mg	200.00030	199.4603	200.5403	0.0500	200.0503 mg	6.2E-01 ✓
	1 g	1.00000880	0.9991088	1.0009088	0.0000000	1.0000088 g	1E-03 ✓
	2 g	2.00001470	1.9989147	2.0011147	0.0003250	2.0003397 g	1.3E-03 ✓
	5 g	5.00000840	4.9985084	5.0015084	0.0000400	4.9999684 g	1.7E-03 ✓
	10 g	10.0000100	9.998010	10.002010	0.000245	9.999765 g	2.3E-03 ✓
Dot	20 g	20.0000140	19.996014	20.004014	0.000990	20.001004 g	4.6E-03 ✓
	50 g	49.9999660	49.989966	50.009966	0.000595	49.999371 g	1.1E-02 ✓
	100 g	100.000000	99.98000	100.02000	0.00194	99.99806 g	2.3E-02 ✓

JJ Calibrations, Inc. certifies that this instrument has been calibrated in accordance with the JJ Calibrations Quality Assurance Manual with the stated procedure using standards that are traceable to the National Institute of Standards and Technology (NIST), or other National Measurement Institutes (NMI's), or by using natural physical constants, intrinsic standards or ratio calibration techniques. The quality system and this certificate are in compliance with ANSI/NCSL Z540-1-1994, ISO/IEC 17025-2005, ISO 10012-1, the ISO 9000 family and QS 9000. The expanded uncertainties of measurements for this calibration are based upon 95% (2 sigma) confidence limits. Unless otherwise stated, a test accuracy ratio (TAR) of 4:1, if achievable, is maintained. The results reported herein apply only to the calibration of the item described above. This report may not be reproduced, except in full, without prior written consent of JJ Calibrations, Inc.
JJ Calibrations, Inc. quality system has been assessed and accredited to ISO/IEC 17025:2005.

Reviewer

3 Issued 10/29/2018 Rev # 15

Inspector

SCALE WEIGHT CALIBRATION DATA SHEET

Weight to be calibrated: 10 pounds

ID Number: OMNI-00132

Standard Calibration Weight: 10 pounds

ID Number: OMNI-00255

Scale Used: MTW-150K

ID Number: OMNI-00353

Date: 2/23/2018 By: B. Davis

Standard Weight (A) (Lb.)	Weight Verified (B) (Lb.)	Difference (A - B)	% Error
10.0	10.0	0.0	0

*Acceptable tolerance is 1%.

This calibration is traceable to NIST using calibrated standard weights.

Technician signature: [signature] Date: 2/23/18

Certificate of Calibration

Certificate Number: **698278**

JJ Calibrations, Inc.
7007 SE Lake Rd
Portland, OR 97267-2105
Phone 503.786.3005
FAX 503.786.2994

Omni-Test Laboratories
13327 NE Airport Way
Portland, OR 97230

ACCREDITED
0723.01
Calibration

PO: **190231**
Order Date: 04/04/2019
Authorized By: **N/A**

Property #: OMNI-00650
User: N/A
Department: N/A
Make: Control Company
Model: 6530
Serial #: 181062211
Description: Thermohygrometer / Barometer
Procedure: 403406
Accuracy: ±3%RH, ±.4°C(0.8°F), ±4mbar(0.12inHg)

Calibrated on: 04/18/2019
*Recommended Due: 04/18/2020
Environment: 22 °C 53 % RH
* As Received: Within Tolerance
* As Returned: Within Tolerance
Action Taken: Calibrated
Technician: **146**

Remarks: * Many factors may cause the unit to drift out of calibration before the recommended due date. Any reported error is the absolute value between the reference and the unit. Uncertainties include the effects of the unit.

Standards Used

Std ID	Manufacturer	Model	Nomenclature	Due Date	Trace ID
847A	Fluke	RPM4	Reference Pressure Monitor	11/21/2019	688957
644A	Thunder Scientific	1200	Two Pressure Humidity Generator	07/30/2019	674006

Measurement Data

Parameter / Measurement Description	Range Unit	Reference	Min	Max	*Error	UUT	Uncertainty
Before/After							Accredited = ✓
Humidity							
	%	13.0	10	16	1	14 %	5.8E-01 ✓
	%	50.0	47	53	2	48 %	5.8E-01 ✓
	%	80.0	77	83	3	77 %	5.8E-01 ✓
Temperature							
	°C	20.00	19.6	20.4	0.4	19.6 °C	8.1E-02 ✓
	°C	35.00	34.6	35.4	0.4	34.6 °C	8.1E-02 ✓
	°C	50.00	49.6	50.4	0.2	49.8 °C	8.1E-02 ✓
Barometer							
	29 inHg	29.6210	29.501	29.741	0.009	29.630 inHg	8.1E-02 ✓

JJ Calibrations, Inc. certifies that this instrument has been calibrated in accordance with the JJ Calibrations Quality Assurance Manual with the stated procedure using standards that are traceable to the National Institute of Standards and Technology (NIST), or other National Measurement Institutes (NMI's), or by using natural physical constants, intrinsic standards or ratio calibration techniques. The quality system and this certificate are in compliance with ANSI/NCSL Z540-1-1994, ISO/IEC 17025-2005, ISO 10012-1, the ISO 9000 family and QS 9000. The expanded uncertainties of measurements for this calibration are based upon 95% (2 sigma) confidence limits. Unless otherwise stated, a test accuracy ratio (TAR) of 4:1, if achievable, is maintained. The results reported herein apply only to the calibration of the item described above. This report may not be reproduced, except in full, without prior written consent of JJ Calibrations, Inc.
JJ Calibrations, Inc. quality system has been assessed and accredited to ISO/IEC 17025:2005.

Reviewer

3 Issued 04/19/2019 Rev # 15

Inspector

OMNI Environmental Services, Inc.
OMNI-Test Laboratories, Inc.

Tape Measure Calibration Log

Place the calibrated 12" ruler under the tape measure and verify that each ½" (i.e. 1.5", 2", 2.5") between 0 and 36" is within 1/8".

Calibrated using OMNI-00281

Tape Measure Number	Description	Cal Dates				Technician Initials			
OMNI-00296-T55	Dewalt 16' Tape Measure	12/12/16	12/4/17	1/2/19		BR	BR	BR	
OMNI-00296-T56	Dewalt 25' Tape Measure	12/12/16				BR			
OMNI-00296-T59	Dewalt 25' Tape Measures	12/12/16				BR			
OMNI-00296-T58	Dewalt 25' Tape measure	3/9/17	4/3/18			BR	BR		
OMNI-00296-T40	Stanley FatMax Tape measurer 16'	11/17/17	1/2/19			NTS	BR		
OMNI-00296-T31	Stanley Powerlock Tape Measurer	11/22/17	1/2/19			NTS	BR		
OMNI-00296-T59	DeWalt 25' tape Measure	12/06/17	4/3/19			NTS	BR		
OMNI-00296-T54	DeWalt 25' tape Measure	12/06/17				NTS			
OMNI-00296-T56	DeWalt 25' tape Measure	12/06/17				NTS			
OMNI-00296-T55	DeWalt 25' tape Measure	12/06/17	4/3/18	4/3/19		NTS	BR	BR	
OMNI-00296-T47	Removed From Service, Numbers were wearing off.	1/2/19				BR			

VWR Temperature Hygrometer Calibration Procedure and Data Sheet

Frequency: Every Two Years

Step 1: Locate NIST traceable standard.

Step 2: Place unit to be calibrated, tracking No. OMNI-00592, inside OMNI desiccate box on the same shelf with the NIST traceable standard.

Step 3: After a period of not less than four hours record the temperature and humidity of both units in the spaces provide below.

Step 4: If the unit to be calibrated matches the NIST standard within ± 4%, it is acceptable. If not, the unit needs to be sent to a repair company or replaced.

Verification Data:

Date: ~~1/29/19~~ 1/29/19 Technician: B Davis

Time in desiccate: 0840 Recording time: 1415

NIST Standard Temperature: 70.2 °F NIST Standard Humidity: 14.6

Test Unit Temperature Reading: 69.9 °F Test Unit Humidity Reading: 12.1

Test unit OMNI-00592 is X or was not ___ within acceptable limits.

Technician Signature: [signature]

Comments: A difference of 2.5% was found, with a full scale of 90% on the Instrument this gives a 2.77% deviation.

Calibration sheet For MTW-150K S/N MKW04072 (OMNI-00353)

Calibration Interval: 12 months

Parameter	Date	Omni reference weights used	Weight	Scale readout	Compliance	
Mass in Lbs.	12-11-08	00132	10 lb	10.0 lbs	✓	
	12-11-08	00132, 255	20 lb	20.0 lbs	✓	
	12-11-08	00132, 255, 274	30 lb	30.0 lbs	✓	
	3/9/11	00132	10LBS	10LBS	X	SW
	3/9/11	132/255	10LBS x 2	20LB	X	SW
	3/9/11	132/255/274	10LBS x 3	30LB	X	SW
	8/10/2012	00132	10 lb	10.0 lb	✓	J. Clark
	8/10/2012	132, 255	20 lb	20.0 lb	✓	J. Clark
	8/10/2012	132, 255, 274	30 lb	30.0 lb	✓	J. Clark
	7/19/2013	00132	10 lb	10.0 lb	✓	J. Clark
	7/19/2013	132, 255	20 lb	20.0 lb	✓	J. Clark
	7/19/2013	132, 255, 274	30 lb	30.0 lb	✓	J. Clark
	7/8~~x~~9/2014	-00132	10 lb	10.0 lb	✓	J. Clark
	7/9/2014	-00132, -00255	20 lb	20.0 lb	✓	J. Clark
	7/9/2014	-00132, -00255, -00274	30 lb	30.0 lb	✓	J. Clark
	7/13/2015	-00132	10 lb	10.0 lb	✓	J. Clark
	7/13/2015	-00132, -00255	20 lb	20.0 lb	✓	↓
	7/13/2015	-00132, -00255, -00274	30 lb	30.0 lb	✓	↓
	7/26/2016	omni-00283B	1 kg	2.2 lb	✓	B Davis
	7/26/2016	omni-00274	10 lb	12.2 lb	✓	B Davis
	7/26/2016	omni-00255	10 lb	22.2 lb	✓	B Davis
	8/14/17	omni-00283B	1 kg	2.2 lbs	—	BD
	8/14/17	omni-00274	+ 10.0	~~10.0~~ 12.2	✓	BD
	8/14/17	omni-00255	+ 10.0	22.2	✓	BD
	8/31/18	omni-00283B	1 kg	2.2	—	BD
	8/31/18	omni-00274	+ 10.0	12.2	—	BD
	8/31/18	omni-00255	+ 10.0	22.2	✓	BD
	10/24/19	omni-00283B	1 kg	2.2 lbs	—	BD
	10/24/19	omni-00274	+ 10.0	12.2 lbs	—	BD
	10/24/19	omni-00255	+ 10.0	22.2 lbs	—	BD

Established 1974

QUALITY CONTROL SERVICES

LABORATORY EQUIPMENT • SALES • SERVICE • CALIBRATION • REPAIRS
2340 SE 11TH Ave. Portland, Oregon 97214 • Box 14831 Portland, Oregon 97293
(503) 236-2712 • FAX (503) 235-2535 • www.qc-services.com

A2LA ACCREDITED
CERTIFICATE #1550.01

OMNI-Test Laboratories, Inc.
13327 NE Airport Way
Portland, OR 97230

Report Number: OMNE0353719181002

A2LA ACCREDITED
CERTIFICATE OF CALIBRATION WITH DATA

INSTRUMENT INFORMATION

Item	Make	Model	Serial Number	Customer ID	Location
Scale	Weigh-Tronix	WI-125x5000x0.5lb	53719	356	Lab
Units	**Readability**	**SOP**	**Cal Date**	**Last Cal Date**	**Cal Due Date**
lbs	0.5	QC033	10/2/18	10/4/17	10/2019

FUNCTIONAL CHECKS

SHIFT TEST	LINEARITY	REPEATABILITY	ENVIRONMENTAL CONDITIONS
Test Wt: 1000 Tol: 2.5	Test Wt: HB44 Tol: HB44	Test Wt: 1000 Tol: 2.5	☐ Good ☑ Fair ☐ Poor
As-Found: Pass:☑ Fail:☐	As-Found: Pass:☑ Fail:☐	As-Found: Pass:☑ Fail:☐	Temperature: 20.2°C
As-Left: Pass:☑ Fail:☐	As-Left: Pass:☑ Fail:☐	As-Left: Pass:☑ Fail:☐	

CALIBRATION DATA

Standard	As-Found	As-Left	Expanded Uncertainty
1000	999.5	999.5	0.31
700	699.5	699.5	0.31
500	499.5	499.5	0.29
200	199.5	199.5	0.29
100	99.5	99.5	0.29
50	49.5	49.5	0.29

CALIBRATION STANDARDS

Item	Make	Model	Serial Number	Cal Date	Cal Due Date	NIST ID
Avoirdupois Cast W	Rice Lake	25 and 50lb	PWO990-CA	11/24/17	11/2019	20172265

Permanent Information Concerning this Equipment:

Inidcator Serial Number: 069076

Comments/Information Concerning this Calibration

10/2/2018 - Used 1062 lbs of dead load to be able to walk scale up close to capacity. Relative Humidity = 61.0 %

Report prepared/reviewed by: _____ **Date:** 10-2-18 **Technician:** R.Kauble **Signature:** _____

THIS CERTIFICATE SHALL NOT BE REPRODUCED, EXCEPT IN FULL, WITHOUT THE APPROVAL OF QUALITY CONTROL SERVICES, INC.

The uncertainty is calculated according to the ISO Guide to the Expression of Uncertainty in Measurement and includes the uncertainty of standards used combined with the observed standard deviation of the unit under test. The uncertainty is expanded with a k factor of 2 for an approximate 95% level of confidence. Instruments listed above were calibrated using standards traceable to the National Institute of Standards and Technology (NIST). Calibration data reflect results at the time and location of calibration. Calibration data should be reviewed to insure that the instrument is performing to its required accuracy.

Certificate of Calibration

Certificate Number: **686722**

JJ Calibrations, Inc.
7007 SE Lake Rd
Portland, OR 97267-2105
Phone 503.786.3005
FAX 503.786.2994

Omni-Test Laboratories
13327 NE Airport Way
Portland, OR 97230

ACCREDITED
0723.01
Calibration

PO: **180192**
Order Date: 10/22/2018
Authorized By: **N/A**

Property #: OMNI-00410
User: N/A
Department: N/A
Make: Dwyer
Model: 1430
Serial #: OMNI-00410
Description: Microtector
Procedure: DCN 500908
Accuracy: ±0.00025" WC

Calibrated on: 10/30/2018
*Recommended Due: 10/30/2019
Environment: **22** °C **44** % RH
* As Received: Limited
* As Returned: Limited
Action Taken: Calibrated
Technician: **111**

Remarks: * Many factors may cause the unit to drift out of calibration before the recommended due date. Any reported error is the absolute value between the reference and the unit. Uncertainties include the effects of the unit.

Previous limitation of micrometer head calibrated only continued. .001" reading micrometer head ±.001" (LSD) tolerance applied.

Standards Used

Std ID	Manufacturer	Model	Nomenclature	Due Date	Trace ID
541A	Select	E8FED2	Gage Block Set, 8pc	12/18/2018	663864

Measurement Data

Parameter / Measurement Description	Range Unit	Reference	Min	Max	*Error	UUT	Uncertainty
Before/After							Accredited = ✓
Length							
	Inch	0.1300	0.129	0.131	0.001	0.129 Inch	1.1E-03 ✓
	Inch	0.3850	0.384	0.386	0.001	0.384 Inch	1.1E-03 ✓
	Inch	0.6150	0.614	0.616	0.001	0.614 Inch	1.1E-03 ✓
	Inch	0.8700	0.869	0.871	0.001	0.869 Inch	1.1E-03 ✓
	Inch	1.0000	0.999	1.001	0.001	0.999 Inch	1.1E-03 ✓

JJ Calibrations, Inc. certifies that this instrument has been calibrated in accordance with the JJ Calibrations Quality Assurance Manual with the stated procedure using standards that are traceable to the National Institute of Standards and Technology (NIST), or other National Measurement Institutes (NMI's), or by using natural physical constants, intrinsic standards or ratio calibration techniques. The quality system and this certificate are in compliance with ANSI/NCSL Z540-1-1994, ISO/IEC 17025-2005, ISO 10012-1, the ISO 9000 family and QS 9000. The expanded uncertainties of measurements for this calibration are based upon 95% (2 sigma) confidence limits. Unless otherwise stated, a test accuracy ratio (TAR) of 4:1, if achievable, is maintained. The results reported herein apply only to the calibration of the item described above. This report may not be reproduced, except in full, without prior written consent of JJ Calibrations, Inc.
JJ Calibrations, Inc. quality system has been assessed and accredited to ISO/IEC 17025:2005.

Reviewer

3 Issued 10/31/2018 Rev # 15

Inspector

ZRE NDIR/O_2

USER'S MANUAL

1312 West Grove Avenue
Orange, CA 92865-4134
Phone: 714-974-5560 Fax: 714-921-2531
www.gasanalyzers.com

Thermal Metering System Calibration
Y Factor

Manufacturer:	APEX
Model:	XC-60-EP
Serial Number:	606001
OMNI Tracking No.:	OMNI-00335
Calibrated Orifice:	☐ Yes

Average Gas Meter y Factor	Orifice Meter dH@
1.009	N/A

Calibration Date:	07/23/19	
Calibrated by:	B. Davis	
Calibration Frequency:	Six months	
Next Calibration Due:	1/23/2020	
Instrument Range:	1.000	cfm
Standard Temp.:	68	oF
Standard Press.:	29.92	"Hg
Barometric Press., Pb:	30.16	"Hg
Signature/Date:		7/23/19

Previous Calibration Comparision

Date	1/21/2019	Acceptable Deviation (5%)	Deviation
y Factor	1.022	0.0511	0.013
Acceptance	Acceptable		

Current Calibration

Acceptable y Deviation	0.020
Maximum y Deviation	0.004
Acceptable dH@ Deviation	N/A
Maximum dH@ Deviation	N/A
Acceptance	Acceptable

Reference Standard *			
Standard Calibrator	Model	Standard Test Meter	
	S/N	OMNI-00001	
	Calib. Date	14-Nov-18	
	Calib. Value	0.9981	y factor (ref)

Calibration Parameters	Run 1	Run 2	Run 3
Reference Meter Pressure ("H2O), Pr	0.00	0.00	0.00
DGM Pressure ("H2O), Pd	2.00	1.38	1.00
Initial Reference Meter	299.7	306.5	312.1
Final Reference Meter	306.4	312	320.9
Initial DGM	0	0	0
Final DGM	6.694	5.54	8.88
Temp. Ref. Meter (°F), Tr	78.0	78.0	78.0
Temperature DGM (°F), Td	88.0	89.0	89.0
Time (min)	34.0	34.0	62.5
Net Volume Ref. Meter, Vr	6.700	5.500	8.800
Net Volume DGM, Vd	6.694	5.54	8.88
Gas Meter y Factor =	**1.013**	**1.008**	**1.007**
Gas Meter y Factor Deviation (from avg.)	0.004	0.001	0.002
Orifice dH@	**N/A**	**N/A**	**N/A**
Orifice dH@ Deviation (from avg.)	N/A	N/A	N/A

where:

1. Deviation = |Average value for all runs - current run value|

** 2. y = [Vr x (y factor (ref)) x (Pb + (Pr/ 13.6)) x (Td + 460)]/ [Vd x (Pb + (Pd / 13.6)) x (Tr + 460)]

** 3. dH@ = 0.0317 x Pd / (Pb (Td + 460)) x [(Tr + 460) x time) / Vr]^2

* Reference calibration is traceable to NIST through NIST Test # 40674, Kimble ASTM E1272, or NIST traceable laboratory

** Equations come from EPA Method 5

The uncertainty of measurement is ±0.14 ft^3/min. This is based on the reference standard having a TAR (Test Accuracy Ratio) of at least 4:1.

Reviewed By 8/27/19

DIFFERENTIAL PRESSURE GAUGE CALIBRATION DATA SHEET

Instrument to be calibrated: Pressure Transducer

Maximum Range: 0-2" WC ID Number: OMNI-00335

Calibration Instrument: Digital Manometer ID Number: OMNI-00633

Date: 7/23/19 By: B. Davis

This form is to be used only in conjunction with Standard Procedure C-SPC.

Range of Calibration Point ("WC)	Digital Manometer Input ("WC)	Pressure Gauge Response ("WC)	Difference (Input - Response)	% Error of Full Span*
0-20% Max. Range 0 - 0.4	0.045	0.042	0.003	0.15
20-40% Max. Range 0.4 - 0.8	0.525	0.526	0.001	0.05
40-60% Max. Range 0.8 – 1.2	1.120	1.124	0.004	0.2
60-80% Max. Range 1.2 – 1.6	1.330	1.336	0.006	0.3
80-100% Max. Range 1.6 – 2.0	1.733	1.739	0.006	0.3

*Acceptable tolerance is 4%.

The uncertainty of measurement is ±0.4" WC. This is based on the reference standard having a TAR (Test Accuracy Ratio) of at least 4:1.

Technician signature: _____ Date: 7/23/19

Reviewed by: _____ Date: 08/27/19

Temperature Calibration
EPA Method 28R, ASTM 2515

Booth:	Temperature Monitor Type:	Equipment Number:
Mobile	National Instruments Logger	00335, 00336

Reference Meter Equipment Number: 00373	Calibration Due Date: 8/02/17

Calibration Performed By:	Date:	Ambient Temperature:	Barometric Pressure:
B. Davis	7/23/19	76	30.16

Input Temperature (F)	Ambient	Meter A	Meter B	Filter A	Filter B	Tunnel	FB Interior
0	1	1	1	1	1	0	0
100	101	101	101	101	101	100	100
300	301	301	302	301	301	300	300
500	501	501	501	501	501	500	500
700	701	701	701	701	701	700	700
1000	1001	1001	1001	1001	1001	1000	1000

Input (F)	FB Top	FB Bottom	FB Back	FB Left	FB Right	Imp A	Imp B	Cat	Stack
0	0	0	0	0	0	1	1	1	1
100	100	100	100	100	100	101	101	101	100
300	300	300	300	300	300	301	301	301	300
500	500	500	500	500	500	501	501	501	501
700	700	700	700	700	700	701	701	701	700
1000	1000	1000	1000	1000	1000	1001	1001	1001	1000
1500								1501	
2000								2001	

Technician signature: [signature] Date: 7/23/19

Reviewed By: [signature] Date: 08/27/19

Thermal Metering System Calibration
Y Factor

Manufacturer:	APEX
Model:	XC-60-EP
Serial Number:	606002
OMNI Tracking No.:	OMNI-00336
Calibrated Orifice:	☐ Yes

Average Gas Meter y Factor	Orifice Meter dH@
0.990	N/A

Calibration Date:	07/23/19	
Calibrated by:	B. Davis	
Calibration Frequency:	Six months	
Next Calibration Due:	1/23/2020	
Instrument Range:	1.000	cfm
Standard Temp.:	68	oF
Standard Press.:	29.92	"Hg
Barometric Press., Pb:	30.16	"Hg
Signature/Date:		7/23/19

Previous Calibration Comparision

Date	1/21/2019	Acceptable Deviation (5%)	Deviation
y Factor	0.995	0.04975	0.005
Acceptance	Acceptable		

Current Calibration

Acceptable y Deviation	0.020
Maximum y Deviation	0.001
Acceptable dH@ Deviation	N/A
Maximum dH@ Deviation	N/A
Acceptance	Acceptable

Reference Standard *			
Standard Calibrator	Model	Standard Test Meter	
	S/N	OMNI-00001	
	Calib. Date	14-Nov-18	
	Calib. Value	0.9981	y factor (ref)

Calibration Parameters	Run 1	Run 2	Run 3
Reference Meter Pressure ("H2O), Pr	0.00	0.00	0.00
DGM Pressure ("H2O), Pd	1.94	1.20	0.80
Initial Reference Meter	321	326.1	331.2
Final Reference Meter	326.003	331.1	336.6
Initial DGM	0	0	0
Final DGM	5.107	5.124	5.549
Temp. Ref. Meter (°F), Tr	78.0	78.0	78.0
Temperature DGM (°F), Td	88.0	88.0	89.0
Time (min)	23.8	29.0	38.0
Net Volume Ref. Meter, Vr	5.003	5.000	5.400
Net Volume DGM, Vd	5.107	5.124	5.549
Gas Meter y Factor =	**0.991**	**0.989**	**0.989**
Gas Meter y Factor Deviation (from avg.)	0.001	0.001	0.001
Orifice dH@	**N/A**	**N/A**	**N/A**
Orifice dH@ Deviation (from avg.)	N/A	N/A	N/A

where:

1. Deviation = |Average value for all runs - current run value|

** 2. y = [Vr x (y factor (ref)) x (Pb + (Pr/ 13.6)) x (Td + 460)]/ [Vd x (Pb + (Pd / 13.6)) x (Tr + 460)]

** 3. dH@ = 0.0317 x Pd / (Pb (Td + 460)) x [(Tr + 460) x time) / Vr]^2

* Reference calibration is traceable to NIST through NIST Test # 40674, Kimble ASTM E1272, or NIST traceable laboratory

** Equations come from EPA Method 5

The uncertainty of measurement is ±0.14 ft^3/min. This is based on the reference standard having a TAR (Test Accuracy Ratio) of at least 4:1.

Reviewed By 8/27/19

DIFFERENTIAL PRESSURE GAUGE CALIBRATION DATA SHEET

Instrument to be calibrated: Pressure Transducer

Maximum Range: 0-2" WC ID Number: OMNI-00336

Calibration Instrument: Digital Manometer ID Number: OMNI-00633

Date: 7/23/19 By: B. Davis

This form is to be used only in conjunction with Standard Procedure C-SPC.

Range of Calibration Point ("WC)	Digital Manometer Input ("WC)	Pressure Gauge Response ("WC)	Difference (Input - Response)	% Error of Full Span*
0-20% Max. Range 0 - 0.4	0.99	0.102	0.003	0.15
20-40% Max. Range 0.4 - 0.8	0.727	0.730	0.003	0.15
40-60% Max. Range 0.8 – 1.2	0.951	0.953	0.002	0.10
60-80% Max. Range 1.2 – 1.6	1.466	1.470	0.006	0.30
80-100% Max. Range 1.6 – 2.0	1.714	1.718	0.004	0.20

*Acceptable tolerance is 4%.

The uncertainty of measurement is ±0.4" WC. This is based on the reference standard having a TAR (Test Accuracy Ratio) of at least 4:1.

Technician signature: _____ Date: 7/23/19

Reviewed by: _____ Date: 08/27/19

Temperature Calibration
EPA Method 28R, ASTM 2515

Booth:	Temperature Monitor Type:	Equipment Number:
Mobile	National Instruments Logger	00335, 00336

Reference Meter Equipment Number: 00373	Calibration Due Date: 8/02/17

Calibration Performed By:	Date:	Ambient Temperature:	Barometric Pressure:
B. Davis	7/23/19	76	30.16

Input Temperature (F)	Ambient	Meter A	Meter B	Filter A	Filter B	Tunnel	FB Interior
0	1	1	1	1	1	0	0
100	101	101	101	101	101	100	100
300	301	301	302	301	301	300	300
500	501	501	501	501	501	500	500
700	701	701	701	701	701	700	700
1000	1001	1001	1001	1001	1001	1000	1000

Input (F)	FB Top	FB Bottom	FB Back	FB Left	FB Right	Imp A	Imp B	Cat	Stack
0	0	0	0	0	0	1	1	1	1
100	100	100	100	100	100	101	101	101	100
300	300	300	300	300	300	301	301	301	300
500	500	500	500	500	500	501	501	501	501
700	700	700	700	700	700	701	701	701	700
1000	1000	1000	1000	1000	1000	1001	1001	1001	1000
1500								1501	
2000								2001	

Technician signature: [signature] Date: 7/23/19

Reviewed By: [signature] Date: 08/27/19

Certificate of Calibration

Certificate Number: **707901**

JJ Calibrations, Inc.
7724 SE Aspen Summit Drive
Portland, OR 97266-9217
Phone 503.786.3005
FAX 503.786.2994

Omni-Test Laboratories
13327 NE Airport Way
Portland, OR 97230

PO: **190258**
Order Date: 09/03/2019
Authorized By: **N/A**

Property #: OMNI-00430
User: N/A
Department: N/A
Make: Delmhorst
Model: MCS-1
Serial #: OMNI 00430
Description: Moisture Calibrator
Procedure: Raw Data
Accuracy: Raw Data

Calibrated on: 09/09/2019
*Recommended Due: 09/09/2020
Environment: 22 °C 53 % RH
As Received: Other - See Remarks
As Returned: Other - See Remarks
Action Taken: Calibrated
Technician: **40**

Remarks: * Many factors may cause the unit to drift out of calibration before the recommended due date. Any reported error is the absolute value between the reference and the unit.

Data is provided for your determination of acceptability and reported measure value only.

Standards Used

Std ID	Manufacturer	Model	Nomenclature	Due Date	Trace ID
281A	Hewlett-Packard	3458A	Digital Bench Multimeter, 8.5	06/18/2020	700481

Measurement Data

Parameter / Measurement Description	Range Unit	Reference	Min	Max	*Error	UUT
Before/After						
Resistance						
12 %	120 MOhm	0.00000	0.0000	0.0000	120.5641	120.5641 MOhm
22 %	1.1 MOhm	0.0000000	0.000000	0.000000	1.100236	1.100236 MOhm

JJ Calibrations, Inc. certifies that this instrument has been calibrated in accordance with the JJ Calibrations Quality Assurance Manual with the stated procedure using standards that are traceable to the National Institute of Standards and Technology (NIST), or other National Measurement Institutes (NMI's), or by using natural physical constants, intrinsic standards or ratio calibration techniques. The quality system and this certificate are in compliance with ANSI/NCSL Z540-1-1994, ISO/IEC 17025-2005, ISO 10012-1, the ISO 9000 family and QS 9000. The expanded uncertainties of measurements for this calibration are based upon 95% (2 sigma) confidence limits. Unless otherwise stated, a test accuracy ratio (TAR) of 4:1, if achievable, is maintained. The results reported herein apply only to the calibration of the item described above. This report may not be reproduced, except in full, without prior written consent of JJ Calibrations, Inc.
JJ Calibrations, Inc. quality system has been assessed and accredited to ISO/IEC 17025:2005.

Reviewer

Issued 09/11/2019 Rev # 15

Inspector

Certificate of Calibration

14956685

Instrument Identification

Company ID: 74857
OMNI-TEST
MICHAEL CASTILLO
13327 NE ARIPORT WAY
PORTLAND, OR 97230

PO Number: 190251

Instrument ID: **OMNI-00677**
Manufacturer: DWYER INSTRUMENTS
Description: ANEMOMETER VANE

Model Number: VT-200
Serial Number: 18200149

Certificate Information

Reason For Service: CALIBRATION
Type of Cal: NORMAL
As Found Condition: IN TOLERANCE
As Left Condition: IN TOLERANCE
Procedure: 33K6-4-1769-1 VELOCITY, TEMP, AND FLOW REV: 9/30/15
Remarks:

Technician: RYAN EDWARDS
Cal Date 04Sep2019
Cal Due Date: 04Sep2020
Interval: 12 MONTHS
Temperature: 23.0 C
Humidity: 61.0 %

Tektronix certifies the performance of the above instrument has been verified using test equipment of known accuracy, which is traceable to the International System of Units (SI), National Metrology Institutes (NIST, NPL, PTB), derived from ratio type measurements, compared to reference materials or recognized consensus standards. The policies and procedures comply with ANSI/NCSL Z540.1-1994.
The quality system complies with ISO9001.

This certificate shall not be reproduced, except in full, without the written consent of Tektronix.

Approved By: RYAN EDWARDS
Service Representative

Issue Date: 9/4/2019

Calibration Standards

NIST Traceable#	Inst. ID#	Description	Manufacturer	Model	Cal Date	Date Due
14717431	17021560	TEMP/HUM RECORDER	OMEGA	ITHX-SD	08Jun2019	08Jul2020
14942663	38-1005980	PITOT TUBE AIRFLOW SYSTEM	SYPRIS	AF12319/PX653	16Aug2019	16Feb2021
14468373	38-1007264	PLATINUM RESISTANCE THERMOMETER	HART SCIENTIFIC	1502A/5612	15Mar2019	15Mar2020

9639 Interocean Drive • Cincinnati, OH 45246 • Phone: 513-870-4730 • Fax: 513-874-7752

Tektronix®

Certificate of Calibration

14956685

Calibration Standards

NIST Traceable#	Inst. ID#	Description	Manufacturer	Model	Cal Date	Date Due
14330222	38-1018828	TEMP/HUMIDITY PROBE	VAISALA	HMP45A	30Jan2019	30Jan2020
14333248	38-1037024	BAROMETRIC TRANSDUCER	OMEGADYNE	PX02K1-28A5T	31Jan2019	31Jan2020
14302838	B0023974	DATA ACQUISITION/SWITCH UNIT	AGILENT	34970A	22Jan2019	22Feb2020
14550342	H058567	DIGITAL PRESSURE GAGE	MENSOR	2101	09Apr2019	09Jun2020

9639 Interocean Drive • Cincinnati, OH 45246 • Phone: 513-870-4730 • Fax: 513-874-7752

Section 3

Owner’s Manual

Central Boiler, Inc.
20502 160th Street
Greenbush, MN 56726

Serial No: Date Manufactured:

Model: Classic Edge 760

U.S. ENVIRONMENTAL PROTECTION AGENCY Certified to comply with the 2020 particulate emission standards using cord wood.

Tested to: ASTM E2618-13, ASTM E2515-11, CAN/CSA-B415.1-10 (R2015)
Meets: EPA Step 2 Emission Level

Total Particulate Matter: 3.0 g/hr annual weighted average
0.10 lbs/Million Btu heat output

Thermal Output Rating: 0 - 235,938 Btu/hr

Firebox Volume: 23 cubic ft.

Appliance needs periodic inspection and repair for proper operation. Consult owner's manual for further information. It is against federal regulations to operate this appliance in a manner inconsistent with operating instructions in the owner's manual.

p/n: 7000848

CENTRAL BOILER®

CLASSIC EDGE™

TITANIUM HDX SERIES

OUTDOOR WOOD FURNACE

OWNER'S MANUAL

CLASSIC EDGE 760

TITANIUM HDX SERIES

WARNING: If the information in this manual is not followed exactly, a fire or explosion may result causing property damage, personal injury or loss of life.

- **Do not store or use gasoline or other flammable vapors and liquids in the vicinity of this or any other appliance.**
- **WHAT TO DO IF YOU SMELL GAS**
  - **Do not try to light any appliance.**
  - **Do not touch any electrical switch.**
  - **Immediately call your gas supplier. Follow the supplier's instructions.**
  - **If you cannot reach your gas supplier, call the fire department.**
- **Installation and service must be performed by a qualified installer, service agency or the gas supplier.**

EM
C US

0117WB036S
0117WB039E

MADE IN USA

SAVE THESE INSTRUCTIONS

(p/n 9000712 - REV. A) - DRAFT

Central Boiler, Inc. • 20502 160th Street • Greenbush, MN 56726
CentralBoiler.com

The Classic Edge outdoor hydronic heater by Central Boiler is listed by OMNI-Test Laboratories to the applicable portions of the following standards: UL 2523-13 Solid Fuel-Fired Hydronic Heating Appliances, Water Heaters and Boilers, CAN/CSA B415.1-10 (R2015) Performance Testing of Solid-Fuel-Burning Heating Appliances, CSA-B366.1-11 (R2015) Solid-Fuel-Fired Central Heating Appliance, ASTM E2618-13 Standard Test Method for Measurement of Particulate Emissions and Heating Efficiency of Solid Fuel-Fired Hydronic Heating Appliances, ASTM E2515-11 Standard Test Method for Determination of Particulate Matter Emissions Collected by a Dilution Tunnel.

The Classic Edge includes two 4-foot stainless steel insulated chimney sections (8" in diameter, p/n 10508 - Classic Edge 760). Use only stainless steel solid fuel chimneys specified by Central Boiler. Maximum draft is marked on nameplate.

French Owner's Manual is available at CentralBoiler.com/support or upon request from your dealer
(Manuel d'installation en français disponible sur demande auprès de votre revendeur)

CLASSIC EDGE 760 — Annual Efficiency Rating*: 89.8% (lower heating value), 83.4% (higher heating value)
Manufacturer's Rated Heat Output Capacity: 235,938 Btu/hr | Range**: 0 to 235,938 Btu/hr.
Water Capacity: 330 gal. | Weight: 2,186 lbs

*Performance is a product of the combustion rate, combustion efficiency and heat exchange efficiency with a single fuel load without refueling. Results vary based on wood species, wood quality, wood quantity and moisture content. Efficiencies are determined under the same test conditions using higher heating value, lower heating value and annual fuel utilization efficiency (AFUE).

- This heater meets the 2020 U.S. Environmental Protection Agency's cord wood emission limits for wood heaters sold after May 15, 2020. Under specific test conditions this heater has been shown to deliver heat at rates shown for the respective model above**.
- This wood heater has a manufacturer-set minimum low burn rate that must not be altered. This wood heater needs periodic inspection and repair for proper operation. It is against federal regulations to operate this wood heater in a manner inconsistent with operating instructions in this manual.
- DO NOT OVERFIRE THIS HEATER. Attempts to achieve heat output rates that exceed heater design specifications can result in permanent damage to the heater.
- Any person(s) operating a hydronic heater must comply with all applicable laws, including but not limited to local ordinances.
- Improper use or failure to maintain the hydronic heater may cause nuisance conditions. The person(s) operating a hydronic heater is/are responsible for operation in a manner that does not create a nuisance condition. Meeting the setback distance and stack height recommendations from the manufacturer and requirements in applicable State and local regulations may not always be adequate to prevent nuisance conditions in some areas due to terrain or other factors.
- Operating an outdoor furnace may not be suitable to some individuals' abilities or lifestyles. Be sure to review the Owner's Manual for the appliance with your dealer.

- Register at time of purchase for FREE 25 Year Limited Warranty -

Verify your warranty and check status of water samples at: CentralBoiler.com/w25

For parts and accessories, service or repairs, call your authorized Central Boiler dealer or heating contractor. Record the information below for future reference.

Model	Serial Number	Installation Date
Dealership Name		Phone Number
Owner Name		

Contents

How to Use This Guide

The guide is divided into sections to help with the operation and maintenance of the outdoor furnace. If questions arise that are not answered with this manual, consult with your authorized Central Boiler dealer.

Central Boiler Online Resources Iv
EPA Resources Iv
Labeling and Terminology 1

Important Precautionary Information 2
Foundation 4
Access to Ports on Outdoor Furnace 5
Ground Rod Kit 6
Furnace Installation - Connecting to Your Existing System 6
Outdoor Wood Furnace Best Burn Practices 8
Chimney Recommendations 8
Chimney Installation 8

Water Quality and Maintenance 11
Initial Water Treatment, Fill and Testing 11
Titanium Series Models - Water Samples 12
Water Sample Kit 12
When to Submit Water Sample 12
System Maintenance 13
Water Test Kits and Test Results 13
Post Heating Season Maintenance 14
Flushing the System 14

Wood Selection and Preparation 16

Operating Instructions 17
FireStar Combustion Controller 17
How the Classic Edge Works 17
Cold Start Firing 19
Adding Heat Load 21
Ash Removal Frequency 21
Adding Wood 21

Maintenance Schedule 26
Control Locations 27
Routine Maintenance 27
Maintenance Sections 28

Serviceable Items 40
Firebox Door Hinge / Latch Bearing Adjustment 40
Firebox Door Seal 40
Reaction Chamber Door Seal 42
Heat Exchanger Door Seal 43
Circuit Breaker 44
Airbox Seal 45
Air Charge Tube and Refractory Modules 46
Thermocouple 47
Heat Exchanger Door Insulation 48
Heat Exchanger Access Cover Insulation 49
Combustion Air Tube / Front Air Channel 50

Troubleshooting 52

General Information 61

Wiring Diagram 62

Water Sample Information - Titanium Series Models 63

CENTRAL BOILER ONLINE RESOURCES

Enter **CentralBoiler.com** in your browser or scan the code using any QR code reader app on your smartphone to access Central Boiler's library of information to help with installation, operation and maintenance of your Central Boiler outdoor furnace.

Detailed Furnace Installation Variations - https://www.CentralBoiler.com/explore/furnace-installation/

View and/or download PDFs to assist in installation of your outdoor furnace. Information and examples regarding pumps, foundations, chimneys and support structures, ThermoPEX piping, and example configurations for a variety of heating configurations.

Online Support Center

https://www.CentralBoiler.com/Support/

Enter your furnace serial number and find articles, answers, parts and more information.

Online Support Center

CentralBoiler.com/Support

Enter your serial number for information specific to your furnace.

Write your ***serial number*** here for future reference.

Videos to supplement the Owner's Manual are available at
www.youtube.com/centralboilerinc
Watch tips on initial startup, testing system water and more.

EPA RESOURCES

EPA's Burnwise Program - https://www.epa.gov/burnwise

How to Use a Moisture Meter Video - http://www.youtube.com/watch?v=jM2WGgRcnm0

EPA offers tips on how to properly use a moisture meter to test firewood before using in a wood-burning stove or fireplace. Wet wood can create excessive smoke which is wasted fuel.

Split, Stack, Cover and Store Video - http://www.youtube.com/watch?v=yo1--Zrh11s

EPA offers four simple steps to properly dry firewood before using in a wood-burning stove or fireplace. Wet wood can create excessive smoke which is wasted fuel. Burning dry, seasoned firewood with a moisture content of 20% or less can save money and help reduce harmful air pollution.

Resources to Help Burn Wood the Right Way - https://www.epa.gov/burnwise/resources-help-you-burn-wood-right-way-and-promote-burn-wise-program
Find tip sheets, brochure and flyers, and more information.

NOTE: The warranty can be voided by operating a residential hydronic heater in a manner inconsistent with the Owner's Manual.

INSTALLATIONS IN MASSACHUSETTS:

1. All installation components must be products approved in the Commonwealth of Massachusetts by the Gas and Plumbing Board.
2. The maximum run of tubing from the water heater to a fan coil is 50 linear feet.
3. Persons operating this hydronic heater are responsible for operation of the hydronic heater so as not to cause a condition of air pollution as defined in 310 CMR 7.01(1).

Labeling and Terminology

The outdoor furnace and this installation guide use the following terms and symbols to bring attention to the presence of hazards of various risk levels and important information concerning the use and maintenance of the outdoor furnace.

⚠ DANGER

This symbol and text indicate an imminently hazardous situation which, if ignored, will result in death or serious injury.

⚠ WARNING

This symbol and text indicate the presence of a hazard which can cause severe personal injury or death to an operator or bystander, or substantial property damage if ignored.

⚠ CAUTION

This symbol and text indicate the presence of a hazard which can cause minor personal injury or property damage if ignored.

NOTE: Indicates supplementary information worthy of particular attention relating to installation, operation, or maintenance of the outdoor furnace but is not related to a hazardous condition.

Be sure to follow all instructions and related precautions as they are meant for your safety and protection. Store this manual in a readily accessible location for future reference.

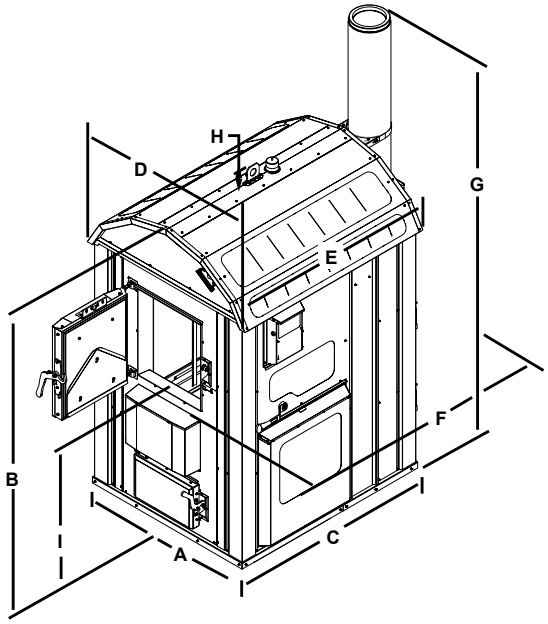

Classic Edge 760 Measurements

	A	B	C	D	E	F	G	H	I
in.	51	84.75	59.75	53.5	60.5	79	164	5	39
cm	130	215	152	136	154	201	417	13	99

- Measurement (F) is from firebox door to chimney inspection cover.
- Measurement (G) includes two 4 ft (1.2 m) chimney sections.
- All measurements are approximate

© 2020 Central Boiler

Important Precautionary Information

Be sure to read carefully and understand these precautions before, during and after the installation, operation and maintenance of the furnace.

NOTE: All operations must be in accordance with local and state codes which may differ from the information in this manual.

⚠ CAUTION

This outdoor furnace is not intended to be the only source of heat. In the event of a prolonged power failure, a generator may be used to prevent lines from freezing. Should the outdoor furnace be left unattended, run out of fuel or require service, an alternate heating source in the building being heated should be in place to prevent damage caused by freezing.

⚠ WARNING

This outdoor furnace and/or chimney is not intended or safety tested to be used or installed in a building where contents of that building could be damaged or where a financial loss could occur from smoke, soot, fire or water.

⚠ WARNING

The outdoor furnace vent cap must fit loosely on the vent opening. Do not force the cap down or try to seal it tightly onto the vent pipe. Do not extend or restrict the vent pipe or opening. DO NOT ALLOW THE OUTDOOR FURNACE TO BE PRESSURIZED.

© 2008 Central Boiler

⚠ WARNING

Be sure the outdoor furnace is filled with water before firing. Never fire the outdoor furnace when the water level is more than 1" (2.5 cm) below the FULL mark on the sight gauge. 1650XL Inhibitor Plus and Molyboost must be added before the initial fill (see Water Quality and Maintenance).

⚠ WARNING

Disconnect the electrical power to the outdoor furnace before replacing an electrical component.

⚠ WARNING

Do not attempt service inside the electrical control panel without first disconnecting the electrical power at the main power source.

NOTE: Any electrical installation should be done by a qualified installer in accordance with applicable codes.

⚠ WARNING

Allow the outdoor furnace to thoroughly cool and completely clean out the firebox before draining water from the outdoor furnace. If the water in the outdoor furnace ever boils, be sure to check the water level and restore to full. If water is added, the proper level of 1650XL Inhibitor Plus (p/n 1650) must be maintained.

⚠ WARNING

When cleaning the outdoor furnace, be careful not to spill any coals.

⚠ WARNING

ALWAYS store ash in a covered non-combustible container.

⚠ WARNING

Do not allow combustible materials (straw, hay or wood) near the outdoor furnace. Keep the perimeter of the outdoor furnace clear and clean.

⚠ WARNING

For fire safety, keep all combustible materials at least six feet (two meters) away from the outdoor furnace, especially around the door area. Debris of wood chips and other combustibles in the area may be easily ignited if a hot coal is spilled out of the firebox and left unnoticed.

⚠ WARNING

The firebox door must be closed and latched at all times except when filling the firebox with wood. Leaving the firebox door open may lead to a runaway fire. In the event of a runaway fire, close the firebox door. In the event of a chimney or soot fire, close the firebox door and make sure power is off to the outdoor furnace.

⚠ WARNING

All covers must be maintained at all times except during maintenance, inspection and service.

⚠ WARNING

When opening the firebox door, the door switch will shut off the primary air actuator motor while the firebox door is open. Do NOT disable the door switch.

NOTE: The prohibition against burning these materials does not prohibit the use of fire starters made from paper, cardboard, saw dust, wax and similar substances for the purpose of starting a fire in an affected wood heater.

NOTE: Do not use chemicals or fluids to start the fire. Use kindling or gas-fired wood ignition option to start an initial fire.

NOTE: The sight gauge valve should always be closed, except when checking water level. Water will automatically drain from the sight gauge tube when the valve is closed. Remember that this type of valve requires only 1/4 turn to open or close.

⚠ WARNING

This heater is designed to burn natural wood only. DO NOT BURN: unseasoned wood, treated wood, colored paper, cardboard, trash or garbage.

NOTE: Chloride or sulfurous gases can be generated if plastic or rubber is burned and will mix with the moisture from the wood and form hydrochloric or sulfuric acids in the firebox, creating corrosion.

NOTE: This outdoor furnace is not to be used with an automatic stoker.

⚠ CAUTION

This outdoor furnace is not to be connected to a chimney flue serving another appliance.

⚠ WARNING

When adding wood to the firebox, be careful not to get pinched between the wood and the door frame, or any part of the outdoor furnace. Use extreme care with large pieces of wood that may be difficult to handle.

Tools

Included with each new furnace are tools that are invaluable for maintenance and cleaning. Use the **maintenance tool** to clean the firebox and to remove ash from the Reaction Chamber. The maintenance tool is also used for cleaning the firebox and door frame. The **cleaning rod** can be used to break up heavy or solidified ash in the firebox. It is also used to clean the heat exchangers. The **Reaction Chamber cleaning tool** is used to clean ash from the Reaction Chamber.

Refer to the Maintenance section for more information.

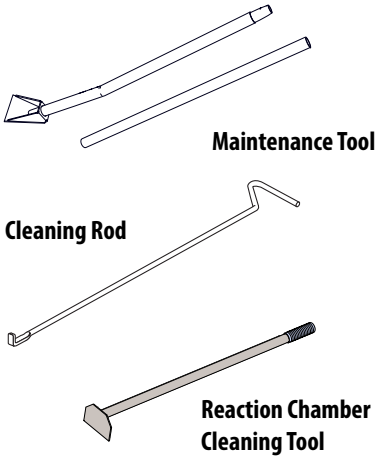

Foundation

The outdoor furnace may be installed directly on stable, level ground without the necessity of a foundation, although installing the outdoor furnace on a foundation offers many advantages. The outdoor furnace is less likely to move due to frost heaving. A foundation keeps the area directly around the outdoor furnace free of standing water and can help to keep unwanted pests out. It can also raise the furnace up to provide a more comfortable height of the firebox door opening.

If the ground is unstable, one option is to use patio blocks under the perimeter of the base. Another option is to pour a concrete foundation.

To install the outdoor furnace on a concrete foundation, refer to the illustration for dimensions and for the location of the hollowed-out area for each model. A 4" to 6" (10 to 15 cm) thick concrete slab works well; however, a thicker slab may be used to obtain the desired door opening height.

If the area for the concrete slab is unstable and/or affected by frost heaving, consider installing 2" closed-cell insulation beneath the front portion of the slab and under the area of the ground used for walking.

⚠ CAUTION

Do not use any combustible materials for the foundation.

NOTE: The installation surface or foundation must be noncombustible. The hot supply and return lines must also be protected from possible exposure to sunlight, fire or physical damage that may be caused by an occurrence outside the outdoor furnace enclosure. Foundations may consist of concrete, crushed rock or patio blocks.

Classic Edge 760
(Foundation Optional)

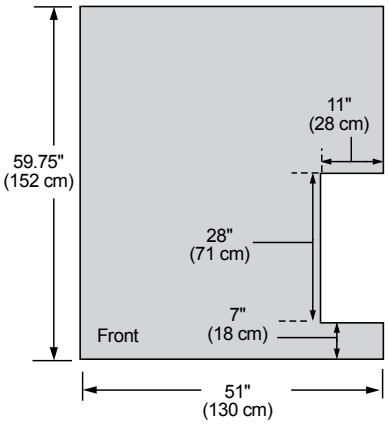

⚠CAUTION
Do not use any combustible materials for the foundation.

Outdoor furnace must be installed on a noncombustible surface or foundation that incorporates an enclosure that will prevent supply and return lines from possible exposure to sunlight, fire, or physical damage that may be caused by an occurrence outside the outdoor furnace enclosure. Foundation may consist of concrete, crushed rock, or patio blocks.

© 2020 Central Boiler

Access to Ports on Outdoor Furnace

Ports are provided that allow mounting circulation pumps on the outdoor furnace. Refer to the illustrations in this section for proper supply and return line and pump installations for your model.

NOTE: The Installation Guide provides more information on pump selection. For even more detailed information, see the Hydronic Component Selection Guide (p/n 2482), available from your Central Boiler dealer.

Classic Edge 760 Model – 3-Pump Configuration

3 - Pump Parts List*

Qty	p/n	Description
2	118	Close Nipple, 3/4"
2	198	Ball Valve, 3/4"
2	224	Isolation Flange Kits, 3/4"
1	225	Isolation Flange Kits, 1-1/4"
2	274	90° Street Elbow, 3/4"
2	296	Swing Check Valve, 3/4"
2	409	Close Nipple, 1-1/4"
1	410	Ball Valve, 1-1/4"
1	411	90° Street Elbow, 1-1/4"
3	536	Nipple, 3/4" x 7"
3	556	Power Supply Cord, 32"
1	582	6 Outlet Converter
4	1330	MPT to PEX, 3/4" x 1"
2	5643	Brass Clamp, 1-1/4"
1	5871	Swing Check Valve, 1-1/4"
4	5926	Stainless Steel Clamp Crimp Ring, 1"
1	6593	Grounding Rod Kit
1	5000015	Nipple, 1-1/4" x 2-1/2
3	5800033	0015e3 Pump

*Parts and accessories sold separately. Pump size may vary.

For illustration purposes only.

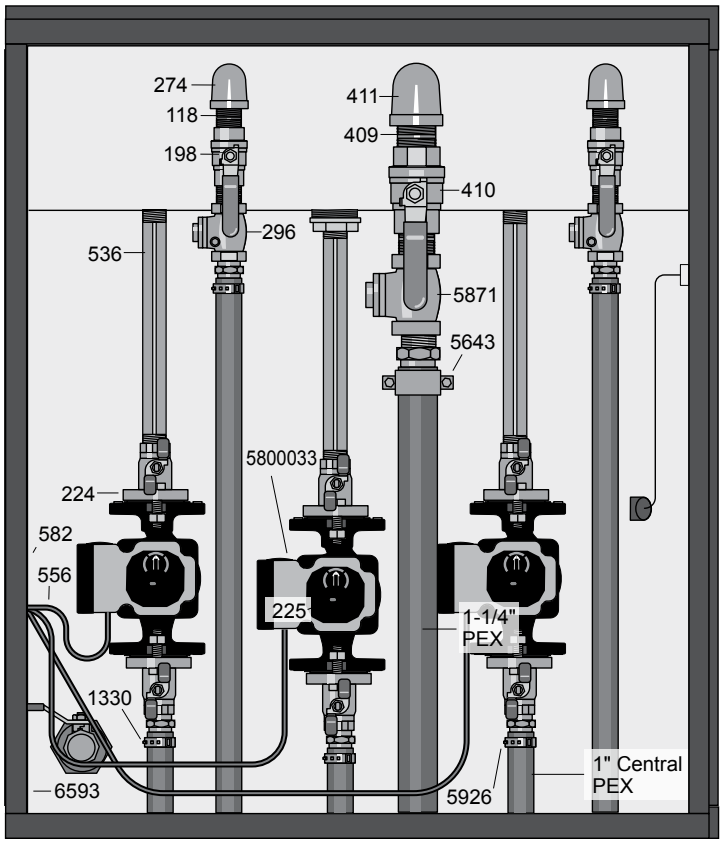

NOTE

Grounding Rod Kit (p/n 6593) must be installed with every furnace.

Ground Rod Kit

The outdoor furnace must be electrically bonded to ground in accordance with the requirements of the authority having jurisdiction or, in absence of such requirements, with the National Electrical Code, ANSI/NFPA 70 and/or the Canadian Electrical Code Part 1, CSA C22.1 Electrical Code.

Install a Ground Rod Kit (p/n 6593) and connect it to the outdoor furnace.

1. In the water line trench near the outdoor furnace, drive the ground rod into the ground until the top of the ground rod is below the ground surface.
2. Route the ground wire from the ground rod under the outdoor furnace base and over to the frame of the outdoor furnace.
3. Secure the ground terminal with a cap screw (1/4" x 3/4"), star washer and nut. Secure the ground wire to the terminal; then secure the ground wire to the ground rod with the clamp. Tighten all hardware securely.

NOTE: A hole for the ground terminal has been pre-punched in the outdoor furnace base near the pumps.

Detailed Furnace Installation Variations

Visit CentralBoiler.com to access a library of detailed illustrations for connecting to a wide variety of existing heating systems and for other heating options.

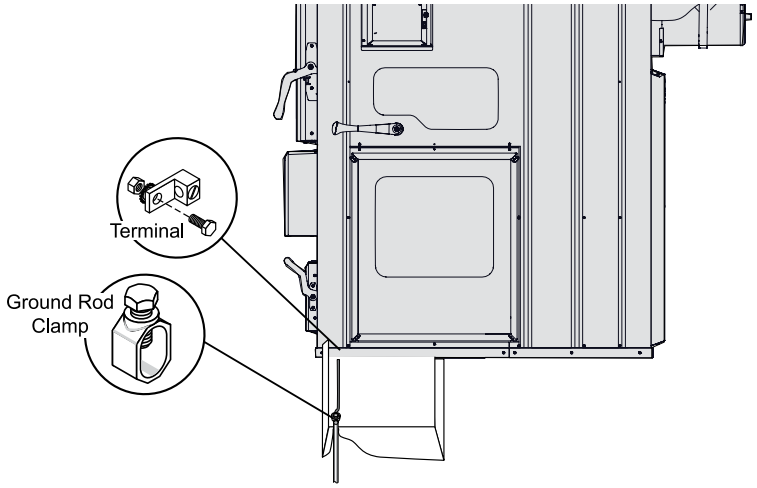

Furnace Installation - Connecting to Your Existing System

A common installation is to connect the outdoor furnace to an existing water heater and then to an existing forced air system. A water-to-air heat exchanger is mounted in the plenum or duct work of the existing furnace. Heated water from the outdoor furnace either continuously flows through the water-to-air heat exchanger or is diverted through a 3-way zone valve. When the thermostat senses the need for heat, the fan on the existing furnace forces air through the heat exchanger, transferring heat throughout the existing ductwork.

NOTE: There are numerous ways to connect to your heating system. Refer to the Central Boiler Outdoor Furnace Installation Guide for other installations.

Typical Installation

Connecting to Water Heater and Forced Air Furnace

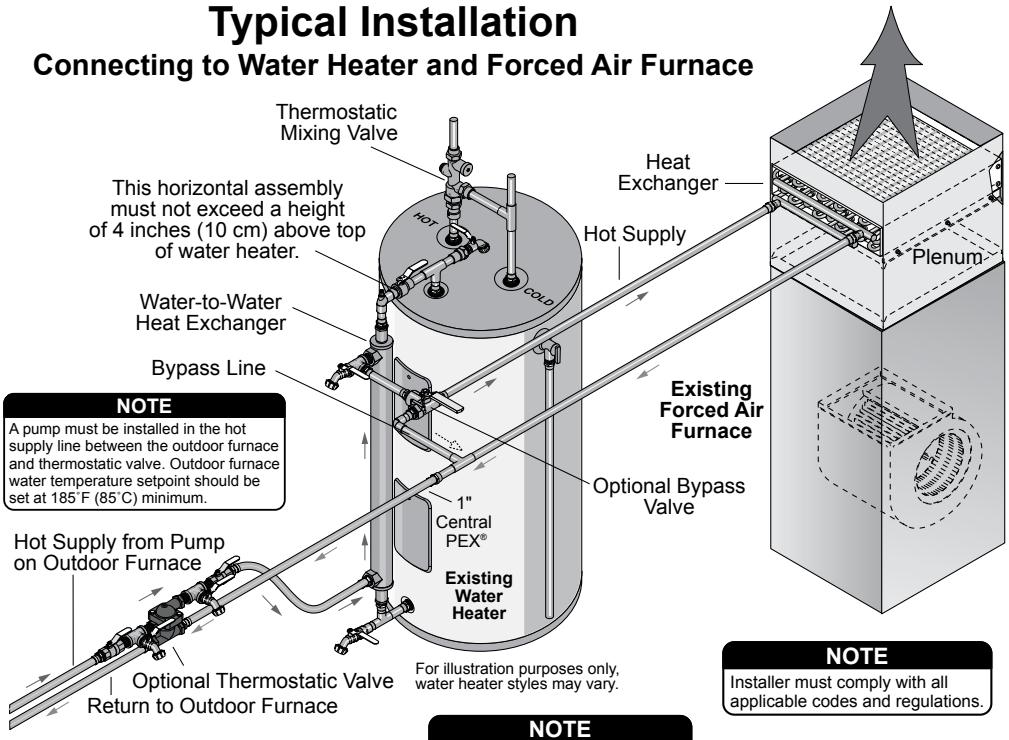

NOTE
A pump must be installed in the hot supply line between the outdoor furnace and thermostatic valve. Outdoor furnace water temperature setpoint should be set at 185˚F (85˚C) minimum.

For illustration purposes only, water heater styles may vary.

NOTE
Installer must comply with all applicable codes and regulations.

NOTE: A certified electrician must do the electrical installation.

NOTE
Any electrical installation should be done by a qualified installer in accordance with applicable codes.

© 2014 Central Boiler

Remote Thermal Storage Installation

Connecting to Remote Thermal Storage Tank

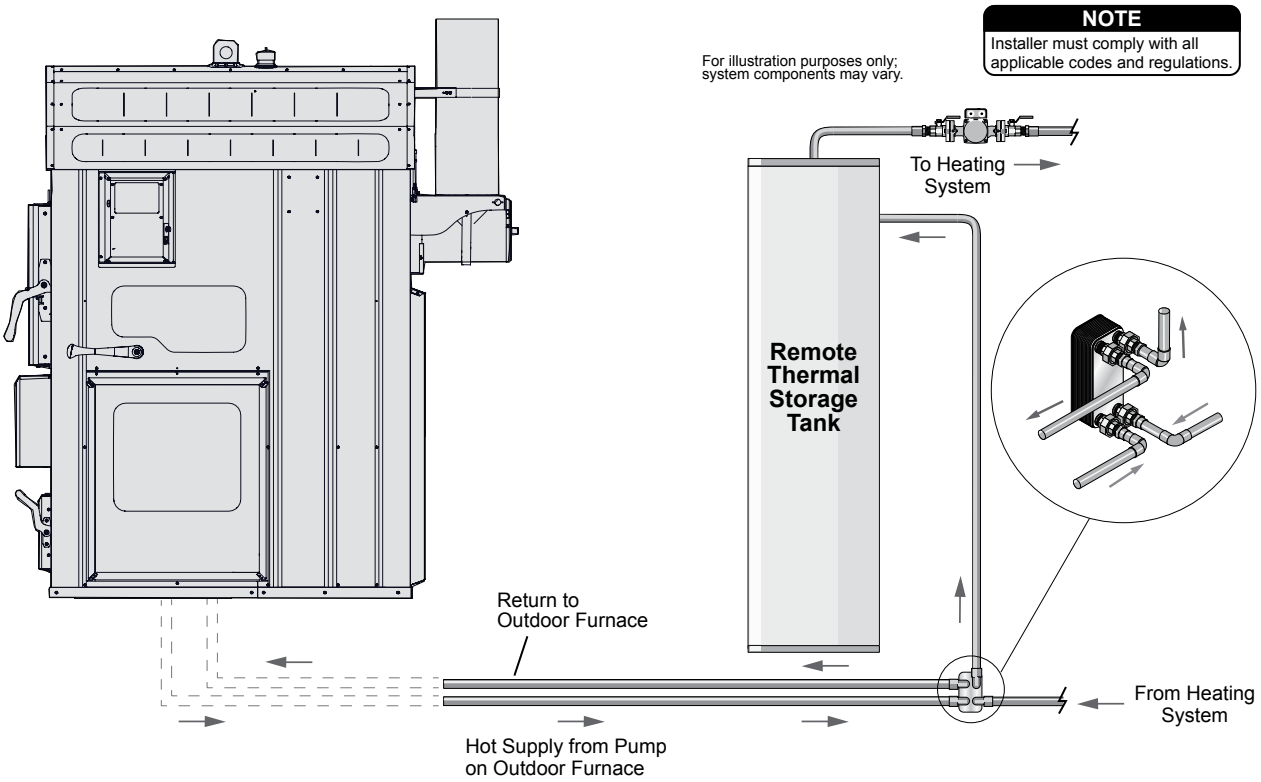

NOTE
Installer must comply with all applicable codes and regulations.

Outdoor Wood Furnace Best Burn Practices

1. Read and follow all operating instructions supplied by the manufacturer.
2. FUEL USED: Only those listed fuels recommended by the manufacturer of your unit. Never use the following: trash, plastics, gasoline, rubber, naphtha, household garbage, material treated with petroleum products (particle board, railroad ties and pressure treated wood), leaves, paper products, and cardboard.
3. LOADING FUEL: For a more efficient burn, pay careful attention to loading times and amounts. Follow the manufacturer's written instructions for recommended loading times and amounts.
4. STARTERS: Do not use lighter fluids, gasoline, or chemicals.
5. CHIMNEY RECOMMENDATIONS: In higher populated areas, extend the chimney to a height above the roofs of surrounding buildings.
6. Always remember to comply with all applicable state and local codes.

Be considerate of neighbors when operating your furnace. If you use your furnace in the summer months, be certain your chimney exhaust is not adversely affecting neighbors with open windows.

Chimney Recommendations

In higher populated areas, extend the chimney to a height above the roofs of surrounding buildings. Use Central Boiler Chimney Extensions when extending the chimney. When only the standard eight feet (2.4 m) of chimney are used, the sections must be secured at the connection joint with four (4) screws to stabilize the extension.

Chimney Installation

NOTE: Instructions for installing chimney sections and the chimney brace assembly are also provided with the furnace.

1. Remove the two slotted hex screws securing the Chimney Slide to the Chimney Support.
2. Remove the six self-tapping screws from the slot in the Chimney Brace Support. These screws are used to assemble the chimney sections.
3. Remove the single slotted hex screw securing the Chimney Strap to the Chimney Brace Support.
4. Install the rope seal at the bottom of the first chimney section; then assemble the chimney as shown.
5. Mount the Chimney Slide to the Chimney Support with two slotted hex screws. Do not tighten completely to allow the Chimney Slide to move.
6. Level the chimney front to back; then position the Chimney Slide against the chimney and completely tighten the two slotted hex screws.
7. Wrap the Chimney Strap around the chimney and secure with a slotted hex screw.
8. Secure the base of the chimney and the joint between the first two chimney sections with three self-tapping screws.

Chimney Section Installation and Chimney Brace Assembly

Illustration for reference only.
Refer to instructions provided with furnace for more information.

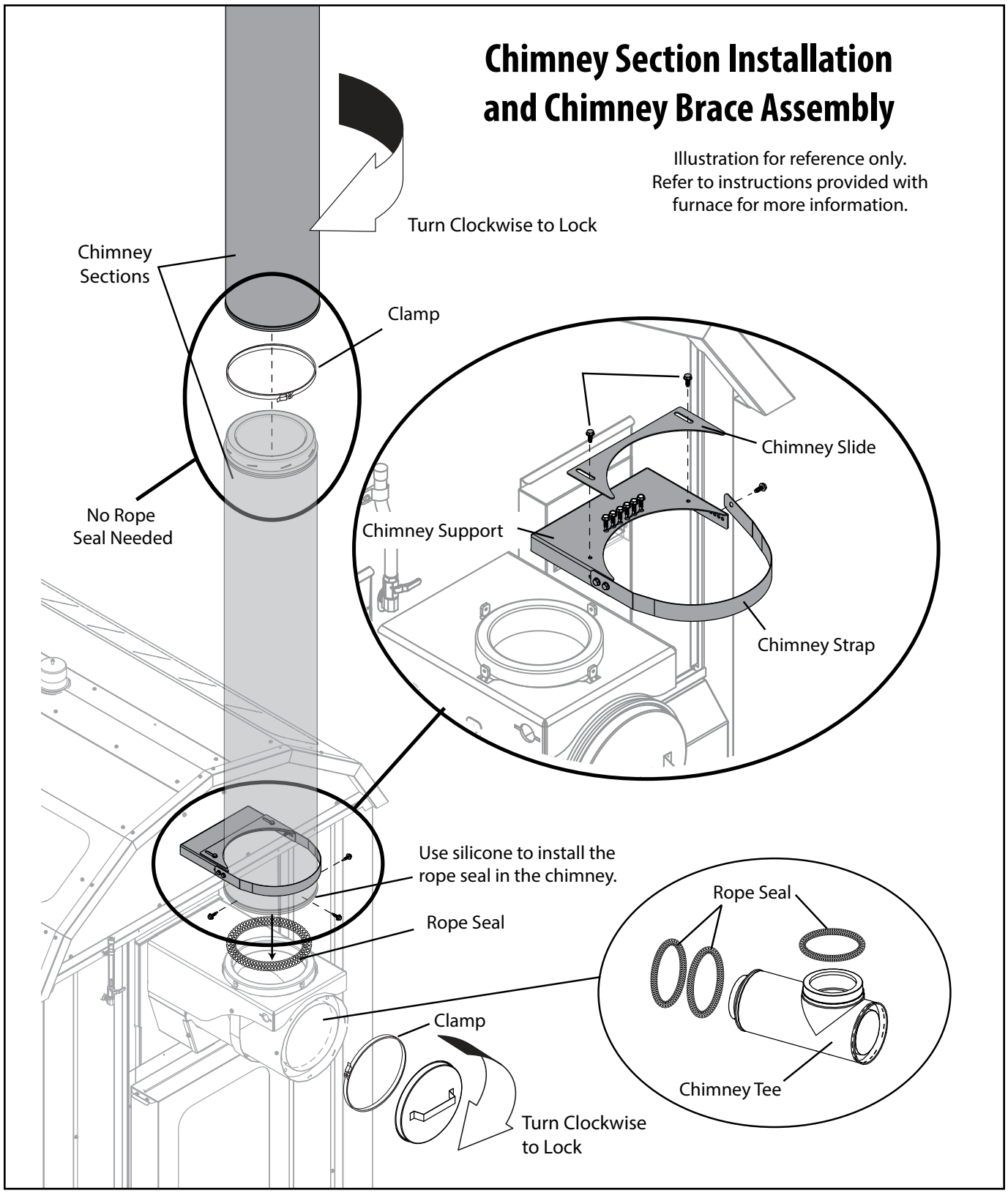

If extensions are added to the standard eight feet (2.4 m) of chimney, the chimney should be reinforced appropriately. The illustration shows chimney support recommendations when three or more sections are used. When adding sections of chimney, make sure that there is nothing within the fall zone of the chimney that could be damaged. If something is located within the fall zone and cannot be removed, guy wires or braces may need to be installed to prevent a falling chimney from causing damage.

NOTE: If more than three 4-foot (1.2-m) sections of chimney are used, a support (e.g., a pole, pipe or other structural support) may be installed from the ground that can withstand wind. Other reinforcement recommendations are shown.

NOTE: For chimney extensions or chimney replacement, use only genuine Central Boiler chimney components. Parts are available from an authorized Central Boiler dealer.

The installation of a spark arrestor is recommended, particularly where there are dry conditions or where there is combustible material near the unit, unless the installation of a spark arrestor is prohibited by local requirements.

NOTE: If the screen is left on the chimney cap, the spark arrestor should be inspected and cleaned as needed.

Use common sense to avoid potential fires, including exercising caution when disposing of ashes, cleaning and refueling. Keep all highly combustible materials (e.g., gasoline, propane, leaves, pine needles, etc.) away from an operating unit at all times. Take special precautions in windy conditions.

NOTE: You may need to increase the chimney height if conditions occur that force exhaust to low levels.

Chimney Reinforcement Recommendations

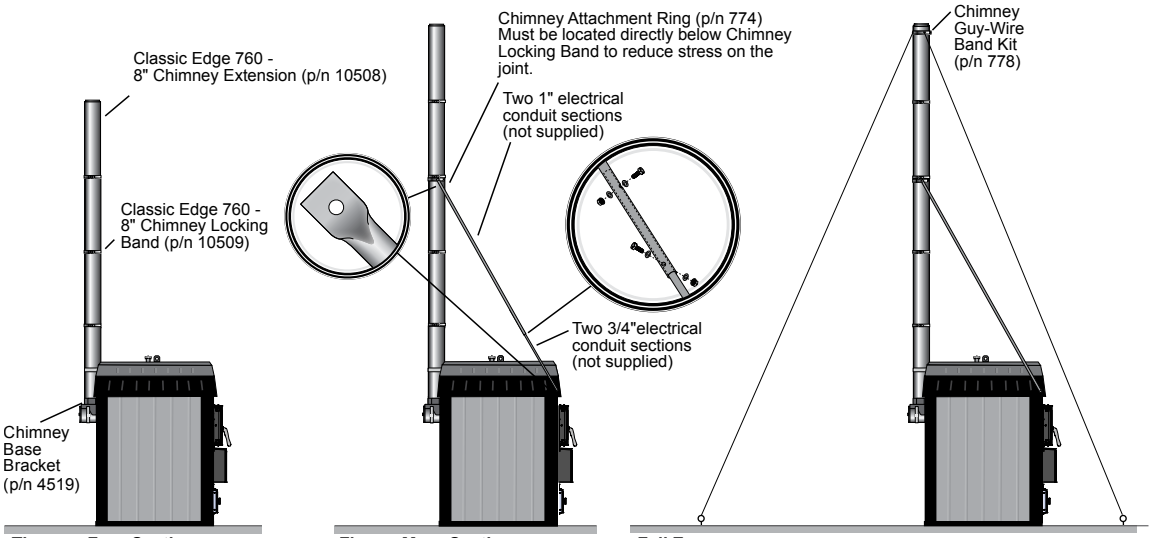

Three or Four Sections
When three or four sections of chimney are being used, a Chimney Base Bracket Kit (p/n 4519) is recommended.

Five or More Sections
When five or more sections of chimney are being used, a Chimney Base Bracket Kit (p/n 4519) and a Chimney Attachment Ring (p/n 774) are recommended.

Fall Zone
If objects are placed in the fall zone of the chimney, a Chimney Guy-Wire Band Kit (p/n 778) or additional bracing is recommended.

NOTE
- Additional bracing may be necessary in certain areas such as those subject to severe weather, winds, freezing rain, etc.
- Inspect all bracing bi-annually for integrity.

WATER QUALITY AND MAINTENANCE

INITIAL WATER TREATMENT, FILL AND TESTING

SEE HOW IT'S DONE
CentralBoiler.com > Support

The Installation and Initial Water Treatment Guide provided with the furnace provides step-by-step instructions for finalizing the installation which includes important information about adding water treatment and filling the outdoor furnace system for the first time (or any time the system has been completely drained and needs to be refilled). Refer to Finalizing the Installation.

Use the following information for your outdoor furnace model:

INITIAL 1650XL INHIBITOR PLUS TREATMENT AMOUNTS	
Classic Edge 760	2 units

NOTE: If the system has a larger than normal water capacity, more 1650XL Inhibitor Plus should be added at a recommended rate of 7 oz. (207 ml) per 10 gallons (37.8 liters) of system water. One unit (1 gallon or 3.78 liters) of 1650XL Inhibitor Plus will treat 180 gallons (681 liters) of system water.

INITIAL MOLYBOOST TREATMENT AMOUNTS	
Classic Edge 760	32 oz.

NOTE: If the system has a larger than normal water capacity, more MolyBoost should be added at a recommended rate of 1 oz. (29.6 ml) per 10 gallons (37.8 liters) of system water.

NOTE: Remember that for Titanium Series stainless steel models, water treatment with 1650XL and MolyBoost is required. For non-stainless models, MolyBoost is optional.

NOTE: MolyBoost is an additive that enhances the corrosion protection properties of 1650XL Inhibitor Plus. When used with 1650XL Inhibitor Plus, it provides more protection than using 1650XL separately. MolyBoost does not provide adequate protection alone without 1650XL.

Titanium Series Models - Water Samples

Maintaining the corrosion inhibitor at a proper level is imperative to preventing corrosion failures. To qualify for the 25 year warranty, you must follow the instructions in the Owner's Manual and the Installation and Initial Water Treatment Guide concerning initial water treatment and maintenance. When the outdoor furnace is initially put into service, and once a year after that, you are required to submit a water sample to confirm proper maintenance and water treatment (see When to Submit Water Sample for more information). No warranty claim can be approved unless the outdoor furnace registration and the required water tests verifications are on file at Central Boiler.

NOTE: It is your responsibility as owner to ensure that your water sample information is accurate and that you submit your samples on a timely basis as required by the warranty for your stainless steel outdoor furnace. Failure to do so will result in a one year warranty.

Water Sample Kit

Your owner's packet contains a Water Sample Kit for submitting an initial water test. Additional Water Samples Kits are available from your Central Boiler dealer.

When to Submit Water Sample

INITIAL WATER SAMPLE: You are required to submit an initial water sample within 30 days of purchase of your outdoor furnace. EXCEPTION: if your outdoor furnace is not being installed within 30 days of purchase, you must email Central Boiler (service@centralboiler.com) with an estimated installation date, your name and your furnace serial number. When the furnace installation is complete, send the water sample **within 10 days of the initial fill**.

ANNUAL WATER SAMPLE: You are required to submit a water sample yearly prior to the anniversary date of your initial installation. Record the anniversary date below:

_____

DATE OF INSTALLATION

TO CHECK STATUS OF YOUR WATER SAMPLE: Check the status of your water sample at:

CentralBoiler.com/w25

You will need your serial number and postal code. Please allow 2-3 weeks for results to be available.

SYSTEM MAINTENANCE

An important part of outdoor furnace maintenance is controlling the quality of the water in the outdoor furnace.

Water Test Kits and Test Results

DATE	pH LEVEL	NITRITE LEVEL

Record the results of pH and nitrite level tests in the table above.
If additional space is needed, record on a separate sheet of paper.

It is very important to keep record of water test results (include the date, pH and nitrite level). If subsequent water tests indicate a pH that is too low and/or a nitrite level that is too high, the results should be verified using a new test kit.

The pH test strips and indicator have a varying shelf life that can affect their accuracy. Test kits should be stored in a dry area at room temperature to obtain maximum accuracy over a longer period of time.

The pH and nitrite levels of the water in the outdoor furnace will not decrease unless fresh water is added to the furnace and/or biological contamination is introduced. Biological contamination can occur if the furnace is not heated up to 185˚F immediately after filling it with inhibitor and water as directed. The nitrite level of the water in the outdoor furnace will not increase unless 1650XL Inhibitor Plus is added. For example, if a water test in the fall of the year indicates a pH of 8.5 and a nitrite level of 2000 ppm and no water or 1650XL Inhibitor Plus is added, a water test the following spring must indicate a pH of at least 8.5 and a nitrite level of no more than 2000 ppm (or slightly less, due to evaporation).

NOTE: ANY time water is added to the system, it is extremely important to bring the water temperature up to operating temperature (185˚F) as soon as possible, even if it is during the off-season. Failure to bring the water in the system up to operating temperature immediately after filling the system can allow bacteria present in the water to multiply and prevent the 1650XL Inhibitor Plus from providing adequate protection.

If the test indicates a significantly lower pH level or higher nitrite level, perform another test with a new test kit to verify the results. If the results are +10% different using a new test kit, it is an indication that either water or 1650XL Inhibitor Plus has been added to the system.

If a test is conducted and verified that indicates a high pH (above 9.5) and/or nitrite level (above 30 drops), DO NOT ADD MORE 1650XL INHIBITOR PLUS. Adding 1650XL Inhibitor Plus increases nitrite and pH levels. Use the following steps to obtain the correct nitrite and pH levels:

1. Drain the outdoor furnace until the water in the sight gauge reaches the bottom of the sight gauge; then add fresh water until it is 1 inch below the FULL mark on the sight gauge.
2. Circulate the water for 30 minutes. Test the water again and, if needed, add 1650XL Inhibitor Plus.
3. Bring the water temperature up to operating temperature (185˚F), circulate for 24 hours and test the system water again.

POST HEATING SEASON MAINTENANCE

The water should be left in the outdoor furnace if the outdoor furnace is not being used for an extended period of time.

1. Refer to the Preventive Maintenance Schedule for a list of operations to perform.
2. Shut off the power supply to the outdoor furnace.
3. Place a cover over the chimney to keep rain from entering the outdoor furnace. Clean and oil the chimney flue to the firebox.
4. To prevent condensation in the firebox, one option is to keep a 60W light bulb on in the firebox during the non-heating season.

Flushing the System

If the system water is brown or orange, it is an indication that the 1650XL Inhibitor Plus level has not been maintained and corrosion is present in the water jacket. Sludge Conditioner (p/n 166 or 1660) can be used by circulating the recommended amount through the furnace **for one week** to help clean some of the corrosion from inside the water jacket before flushing and refilling.

Recommended amounts are:

Classic Edge 760, 1 unit

NOTE: 1 unit = 1/2 gallon if using p/n 1660 or 1 unit = 1 gallon if using p/n 166. Use one unit of Sludge Conditioner per 200 gallons of system water.

Draining Treated System Water

1650XL Inhibitor Plus is composed of common materials and is biodegradable. However, in keeping with good safety and environmental practices, the supplier recommends the following if draining treated system water becomes necessary:

You may drain the outdoor furnace to a home septic system. Central Boiler 1650XL Inhibitor Plus is biodegradable and can be properly treated in a residential septic system. If doing so, however, be careful not to overflow the septic system.

Do not drain the outdoor furnace in such a manner that the drain water could in any way contact surface water, stream, river, estuary (where a river meets a sea), lake, pond, ocean or other types of waters.

Do not drain to any location within 50 feet (15 meters) of any water well.

The water jacket should then be thoroughly flushed and the system refilled with the proper amount of 1650XL Inhibitor Plus and Molyboost added (see following section). Be sure to test the system water to verify the proper amount of 1650XL Inhibitor Plus.

1. De-energize the pump(s) and close the supply and return valves on the outdoor furnace. Remove the inspection panel and insulation covering the drain to gain access to the drain valve. Remove the cap and connect a hose to the drain.
2. Open the drain to drain the system; then flush the top of the firebox and bottom of the water jacket beneath the firebox using a wand placed in the vent.

⚠ CAUTION

Completely clean out the firebox before draining water from the outdoor furnace.

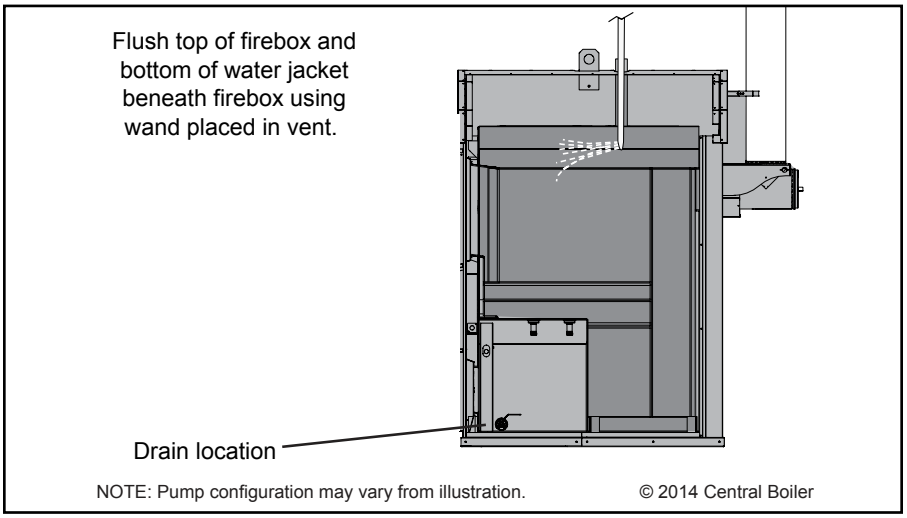

3. Close the drain valve securely and replace the cap on drain after flushing the outdoor furnace.
4. Add 1650XL Inhibitor Plus and Molyboost.
5. Fill the outdoor furnace following the procedure in Finalizing the Installation in the Installation Guide. Start the pump(s) and bring the water temperature up to operating temperature (185˚F) for two hours with the system circulating to thoroughly mix the 1650XL Inhibitor Plus.

NOTE: ANY time water is added to the system, it is extremely important to bring the water temperature up to operating temperature (185˚F) as soon as possible, even if it is during the off-season. Failure to bring the water in the system up to operating temperature immediately after filling the system can allow bacteria present in the water to multiply and prevent the 1650XL Inhibitor Plus from providing adequate protection.

6. Insulate the area using a mat of fiberglass insulation.
7. Install the inspection panel and secure with self-tapping screws.

Wood Selection and Preparation

Before You Start Operating Your Classic Edge Outdoor Wood Furnace

Be sure to read carefully and observe all of the information in the entire Owner's Manual.

If any questions arise that cannot be answered by the information in this manual, be sure to contact your dealer.

For the best results, it is best to burn seasoned split wood. However, it may be possible to burn some unsplit wood with the split wood depending on quality, size, moisture content and wood type. Properly seasoned wood has a moisture content of 20% or less. It is darker, has cracks in the end grain, and sounds hollow when smacked against another piece of wood. Most wood needs to be split to dry down to 20% within a year. Wood between 4" and 8" (10 and 20 cm) in diameter works well in most cases. Pieces of wood that are too large can reduce output capacity because they burn slower.

- Wood that works well in most cases:
  - Is between 4" and 8" (10 and 20 cm) in diameter
  - Is approximately 60-70% of the length of the firebox
  - Typically weighs 10-15 pounds per cubic foot for heavy heat loads
- Pieces of wood that are too large can reduce output capacity because they burn slower. Wood that is too long can cause bridging.
- Seasoned wood burns more efficiently, minimizes the amount of creosote formation and reduces emissions.
- Maintain a quantity of smaller, drier pieces of wood for relighting the fire if the wood load is burned very low or becomes completely empty.
- Green wood contains about 50% moisture by weight. Energy is required to heat the wood and evaporate the moisture - energy which could have been used to provide heat for the home. The illustration below shows that burning drier, seasoned wood provides more energy for heating your home compared with burning green, unseasoned wood that uses more energy to evaporate the moisture and provides less energy for heating your home.

NOTE: Do not store wood within the outdoor furnace installation clearances or within the spaces required for fueling, ash removal and other routine maintenance operations.

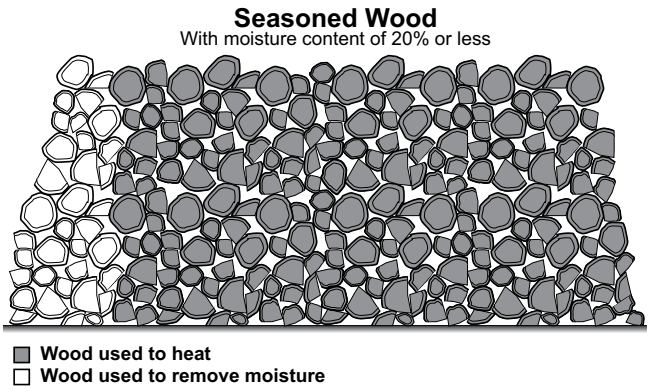

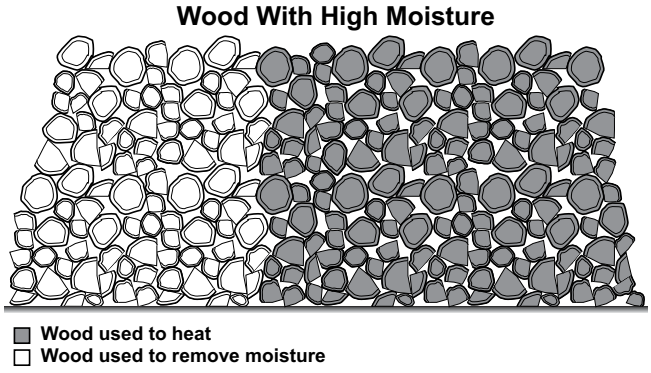

Operating Instructions

FIRESTAR COMBUSTION CONTROLLER

Refer to the FireStar Combustion Controller Operation Manual for information about the combustion controller.

How the Classic Edge Works

Because of its highly efficient and clean-burning design, the Classic Edge operates differently than other types of wood-burning devices. Understanding a few basic principles will help you operate the Classic Edge as it was designed, maximizing its performance, heat transfer and longevity.

NOTE: For proper operation, the fuel must match the heat load, the furnace must be maintained to ensure proper air flow, and the water temperature must be kept above 150˚F (66˚C).

1. The combustion air fan pressurizes the airbox located at the front of the outdoor furnace. Primary air flow, regulated by an actuator motor, flows into the firebox through combustion air outlets located on the front and sides near the bottom. Secondary air is regulated by a second actuator motor that allow air flow through the air charge tube. Combustion starts in the firebox near the bottom of the wood load.

Operating with Properly Seasoned Wood

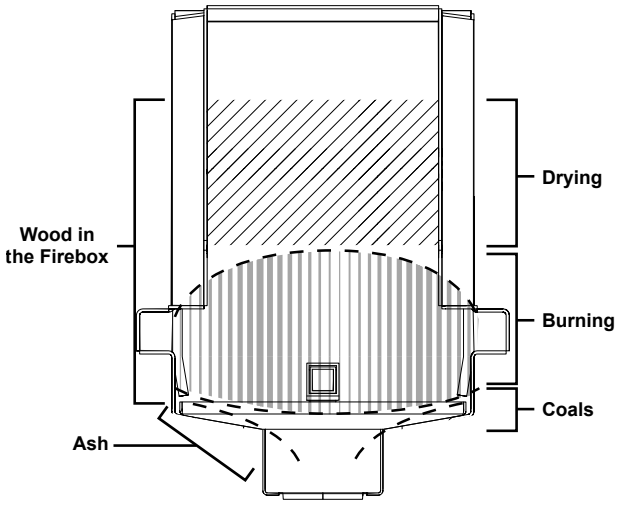

- Burns more efficiently
- Minimizes amount of wood used
- Reduces emissions
- Extends life of furnace
- Reduces bridging

Operating with Wood with Too Much Moisture

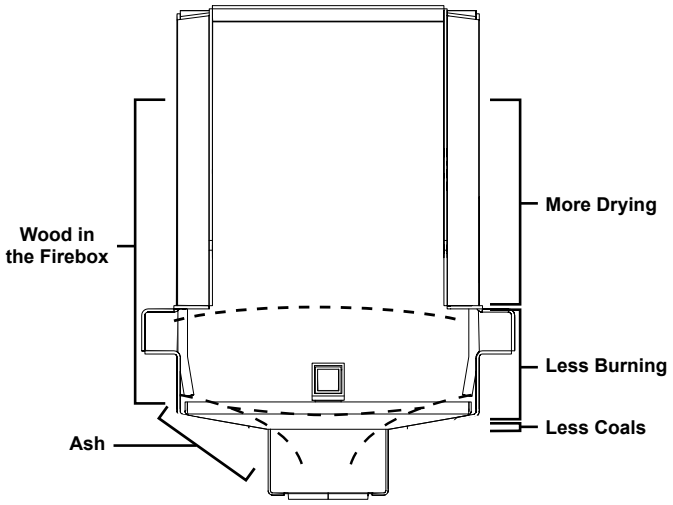

- Burns less efficiently
- Increases amount of wood used
- Lowers combustion rates
- Increases maintenance requirements
- Increases bridging

NOTE: When the volume of burning wood is greater than the volume of drying wood, the outdoor furnace operates more efficiently.

© 2019 Central Boiler

NOTE: The combustion air outlets must be visible (i.e., ash must be kept below the combustion air outlets as shown).

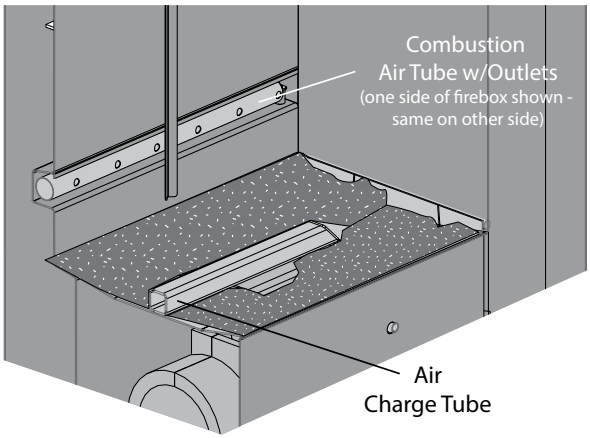

Keep the combustion air tube outlets open and clear of ash and coals to allow the furnace to operate properly.

2. Gasified fuel exits the bottom of the firebox alongside and under the air charge tube, through the mixing channel and down to the Fusion Combustor and Reaction Chamber™. Final combustion occurs in the Reaction Chamber where extremely high temperatures aid in complete combustion. The chimney creates a draft (negative pressure) which helps to draw exhaust gases from the furnace.

3. Heat is transferred to the water from the hot gases as they move through the firebox, the Reaction Chamber and the heat exchanger.

CORRECT
(Proper Flow)

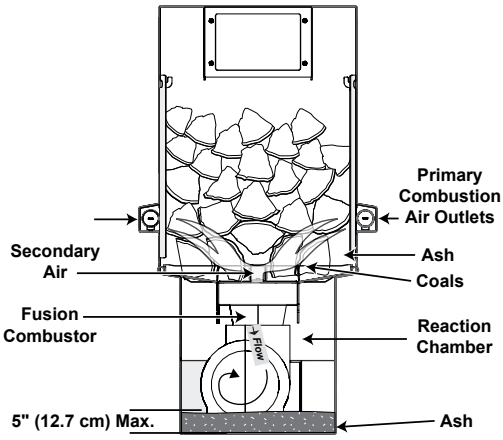

Front View

NOTE: The illustration shows the Classic Edge operating correctly with proper combustion air flow and with the wood properly loaded.

NOTE: A key point to remember about the operation of the Classic Edge is that as wood burns, the combustion gases flow down through the bottom of the firebox so the proper flow must be maintained as shown.

NOTE: Refer to the General Troubleshooting Information for more information on outdoor furnace operation and for conditions to avoid.

Cold Start Firing

NOTE: These procedures apply to initial firing or refueling the outdoor furnace from a cold start (water temperature below 100˚F or 38˚C) and/or no charcoal base left in the firebox).

Use small, dry kindling to establish a good fire on initial or cold startups.

⚠ CAUTION

Do not burn plastic, garbage, treated wood or fuels not listed for this outdoor furnace.

⚠ CAUTION

If the water in the outdoor furnace boils, be sure to check the water level and restore to full. Add 1650XL Inhibitor Plus (p/n 1650) as needed (see Water Quality and Maintenance).

NOTE: Before firing the outdoor furnace for the first time, make sure the proper amount of 1650XL Inhibitor Plus has been added and the water level is 1" below the full mark on the sight gauge, as the water will expand when heated.

1. Disconnect the heat load draw by turning off the pump(s).
2. Turn the controller on by pressing the **Power** button.
3. Lift and push the bypass door handle toward the back of the outdoor furnace to open the bypass door; then unlatch and open the firebox door.

NOTE: The alarm is a reminder that the bypass door is open. During a cold start, it will continue to sound.

⚠ WARNING

When opening the firebox door, the door switch will shut off the primary air actuator motor while the firebox door is open. Do NOT disable the door switch.

4. The first time you fire the outdoor furnace, add very dry kindling to fill the firebox to a level approximately 15 inches (38 cm) from the bottom of the firebox. Smaller kindling is preferred. It should be staggered and able to ignite and burn quickly for the initial fire.

NOTE: For Ignition Assist, press the Ignition Air button on the FireStar combustion controller with the firebox door open to add air and help ignite a new load of wood.

5. To get the cleanest start-up, the kindling must first start to burn at the bottom and as close to center as possible. Place paper around the firebox with very small pieces of kindling on top. Light the paper and kindling. Once the paper and kindling are lit, close and latch the firebox door. Do not close the bypass door.

⚠ CAUTION

Do not leave the firebox door open while the fire is burning. Damage to the door seal and paint on the front of the outdoor furnace will result and it could cause a dangerous build-up of gas in the firebox.

Cold Start Initial Fire Up

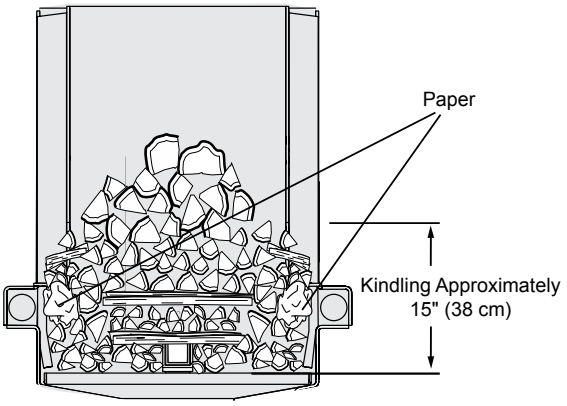

© 2019 Central Boiler

6. Allow the wood load to burn until the kindling turns to coals (leave the bypass door open); then add enough kindling again to fill the firebox about 1/4 full. On top of the kindling, add 8-10 inches (20-25 cm) of dry, seasoned split wood. Close and latch the firebox door.

7. Wait for 15 seconds; then slowly pull the bypass door handle toward the front of the furnace and push down to close the bypass door.

8. After the water temperature is above 150˚F (66˚C), proceed to Adding Heat Load.

Adding Heat Load

NOTE: During initial start-up, a considerable amount of moisture from condensation will collect inside the firebox and heat exchanger and may drip out of the Reaction Chamber door. This is normal and the moisture will evaporate after the first couple of fuel loads.

1. With no heat load draw in the system, monitor the operation of the outdoor furnace until the water temperature reaches the water temperature setpoint.

2. Turn on the pump(s); then start a heat load draw in the system by turning up the thermostat in the house. Monitor the outdoor furnace for one hour or until another cycle occurs (i.e., outdoor furnace goes from combustion to idle mode). If the water temperature drops and does not recover to the water temperature setpoint within one hour of starting the heat load draw, the heat load draw should be shut off, allowing the furnace to cycle to the idle mode again.

NOTE: The outdoor furnace will not operate satisfactorily if the heat load is higher than the output capacity of the outdoor furnace.

3. At this point, there should be glowing coals established in the bottom of the firebox. The firebox can be filled with dry, seasoned split wood.

Ash Removal Frequency

During the first week of operation, check the level of ash in the Reaction Chamber every two days. Ash needs to be removed from the Reaction Chamber before it obstructs the combustion air flow for efficient operation. Clean the Reaction Chamber before it becomes 1/2 full of ash (approximately 5" or 13 cm deep in any area of the Reaction Chamber).

Adding Wood

1. Slowly lift and push the bypass door handle toward the back of the outdoor furnace to open the bypass door; then wait for 15 seconds.

NOTE: The alarm is a reminder that the bypass door is open. During a cold start, it will continue to sound.

⚠ WARNING

Keep your face away and stay as far away as possible from the firebox door area when opening the door.

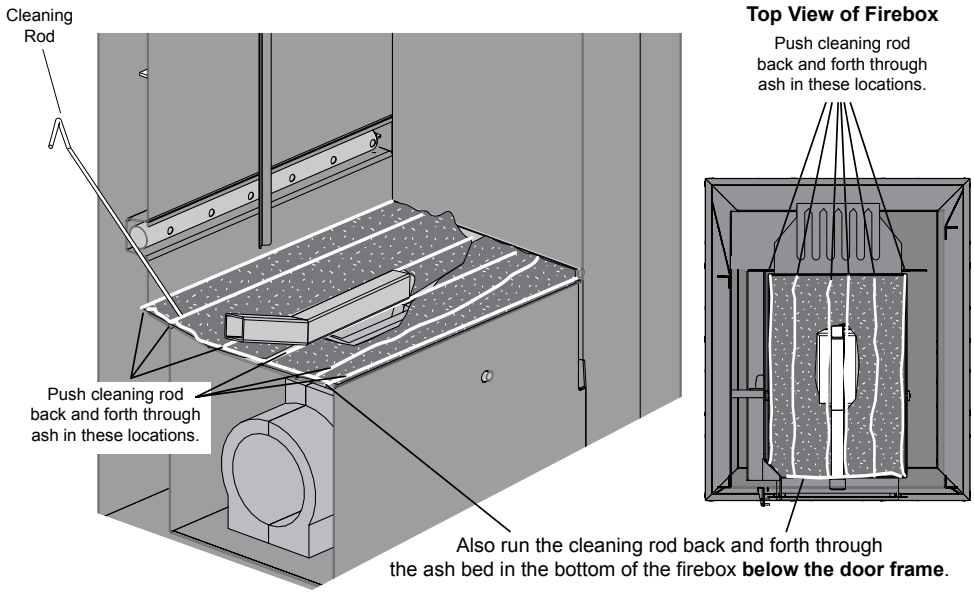

2. Unlatch the firebox door; then slightly open the firebox door and wait 10 seconds. Stay as far away as possible as the firebox door is opened because smoke and hot gases escaping through the firebox door opening could ignite. From a safe distance, observe the fuel load.

⚠ WARNING

Use extreme care when adding wood when wood or coals are already present. Very hot gases may be coming out of the firebox door opening.

OPERATING TIP

Run the cleaning rod through the coal bed every time before loading wood to help maintain proper air flow and optimize combustion.

3. Using the illustration as a reference, push the cleaning rod through the ash, coals and remaining wood in the bottom of the firebox to loosen it up, including a pass on each side of the air charge tube. Also run the rod through the ash bed back and forth in the bottom of the firebox below the door frame.

NOTE: Neglecting to push the cleaning rod through the ash and coals as described in Step 3 each time before wood is loaded can cause the ash bed to deepen and become compacted. This can result in poor heat output and combustion because of restricted airflow. Compacted ash will not fall into the Reaction Chamber; it will need to be removed with a shovel.

4. Some ash in the bottom of the firebox (but not alongside the charge tube) is necessary for the proper operation of the outdoor furnace. Ash acts as an insulator, keeping the glowing coals in the bottom of the firebox hot enough to restart the fire. When using the cleaning rod, some of the ash will fall into the Reaction Chamber and some ash with coals will remain. The coals remaining around the mixing channel (the area alongside the air charge tube) will create a clean, efficient burn.

5. The combustion air outlets must be kept open and clear of ash and coals to allow the furnace to operate properly. If needed, remove enough ash to keep the combustion air outlets free of obstruction.

NOTE: It is important to understand that when the water temperature setpoint (185°F) is reached, the combustion air is shut off until the water temperature drops to the setpoint minus the differential setting. During this cycle-off time there will be no active fire in the firebox. If the firebox door is opened, the wood might begin to burn again but will be shut down when the door is closed if the water temperature is above the setpoint. If the door is opened and closed when the water temperature is below the setpoint the fan will cycle on again to achieve the setpoint even though the differential point has not been reached. If the combustion cycle is activated with the water temperature at least to the differential below setpoint and the fire is not actively burning when the door is closed, first confirm that proper operating and maintenance procedures are being performed before considering testing mechanical components.

6. When refilling the firebox, the new wood load will ignite quickly and burn more efficiently if these instructions are followed. This will prevent creosote buildup in the heat exchanger, air channels or primary elbow. The operating procedures will maintain good air flow and very efficient combustion.

DAILY

- Run the cleaning rod through the ash and coal bed and along both sides of the air charge tube as shown on previous page to keep ash loose. **Use care near the refractory mixing channel.** This will allow excess ash to flow down into the Reaction Chamber. If the coal bed/remaining wood is more than 4 inches deep, it may be necessary to use the cleaning rod to open a passage through the coals on each side of the air charge tube. **Air flow down past the air charge tube is essential for a good combustion rate to be maintained. To confirm adequate air flow, cautiously open the Reaction Chamber door to visually identify the combustion air flow while the furnace is in a burn cycle with the fan on and the bypass closed.**

- To ensure the fire will maintain good combustion, it is important to refill the firebox when an adequate amount of the previous wood load is remaining (enough to provide enough heat and fire to dry and ignite the new wood load). If the coals burn out from under the new wood load and are unable to keep the fire going, there are not enough coals and wood left from the previous load. On Classic Edge Titanium HDX models with FireStar controller software version 6.7 or later, enabling the Easy Refire mode will help keep part of the wood load for a quicker, more efficient fire up after reloading. Easy Refire is enabled as default setting on version 6.72 and later.

- Be sure to fill the firebox with enough wood so there is adequate wood left the next time you load to dry and ignite the new wood.

- Keep in mind that burning dry, well-seasoned wood requires less coals to ignite the new wood load.
- Burning higher moisture wood or larger, unsplit wood will require that a larger amount of the previous wood load remain in the firebox to adequately ignite the new wood load. If there are not an adequate amount of coals or enough of the previous wood load to achieve a good hot fire and efficient combustion with Reaction Chamber temperatures, open the bypass door for a long enough time to get the new wood load burning well; then close the bypass. Refer to Cold Start Firing.
- If the furnace is being used in the fall and spring or on heat loads much lower than the main heating season, use a 25% wood load or whatever amount will be needed for the period of time between normal reloading.

WEEKLY (or as needed)

- Clean the heat exchanger weekly (or as needed) to prevent air flow restriction. When the operating procedure outlined here is used, there will be no creosote formation in the Reaction Chamber or heat exchanger passage.
- Clean ash out of the Reaction Chamber channel as needed. It is best not to allow the Reaction Chamber to fill to a depth over 1/2 full.
- Inspect and clean the chimney tee as needed to prevent restriction.
- Clean and inspect the spark arrestor (if one is being used) as needed.
- Review the operation and maintenance, and refueling tips videos available on the Online Support Center.

NOTE: If the furnace has been operated without adequate airflow and efficient combustion, it may be necessary to inspect and clean the primary combustion air outlets, air channels, primary air elbow, heat exchanger, and Reaction Chamber.

NOTE: If the fire goes out or keeps going out, the pulse timer can be adjusted to a longer duration and shorter time periods between idle pulses.

⚠ WARNING

When adding wood to the firebox, be careful not to get pinched between the wood and the door frame or any part of the outdoor furnace. Use extreme care with large pieces of wood that may be difficult to handle.

7. Inspect the firebox for crusty deposits on the walls and in the corners and use the maintenance tool or similar type of tool to scrape and remove. Use the maintenance tool to remove any thick deposits from the inside front corners of the firebox, down each side and across the top, as shown.

8. Use the maintenance tool to keep the front combustion air outlets, and the combustion outlets on both air tubes free of any buildup.

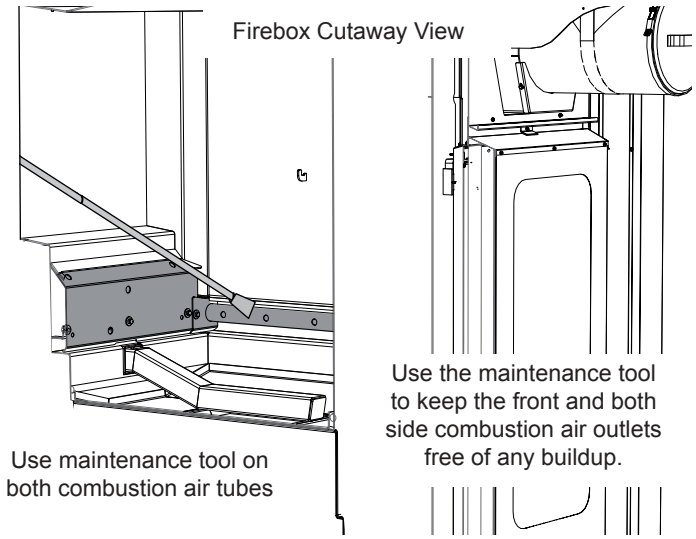

9. When loading, load the wood so that the combustion air outlets on the side of the firebox do not become blocked or restricted.

10. Close and latch the firebox door. **Do not use the firebox door to ram wood into the outdoor furnace. Do not operate the outdoor furnace with the firebox door open.** Combustion in the firebox cannot be controlled if the firebox door is left open or unlatched. If the firebox door is left open, an uncontrolled burn will result. To return to a controlled burn, close and latch the firebox door.

11. Wait for 15 seconds; then slowly pull the bypass door handle toward the front of the furnace and push down to close the bypass door.

⚠ WARNING

The firebox door must be closed and latched at all times except when filling the firebox with wood or damage to gaskets, paint, etc., may occur. Leaving the firebox door open may lead to a runaway fire. In the event of a runaway fire, close the firebox door.

Maintenance Schedule

PREVENTIVE MAINTENANCE SCHEDULE

Regular maintenance and inspections can help extend the life of your outdoor furnace and prevent high-cost repairs. This table is meant to serve as a general guideline until you become acquainted with how the outdoor furnace operates with your specific application.

OPERATION	SERVICE INTERVAL: Before first operation of season	Daily	Weekly	Monthly	Semi-Annually	Post Season	Other	See Section Number
Check water level.	●	●						1
Remove ash.			C			●		3
Scrape firebox door frame; use cleaning rod in ash.		A				●		8
Inspect firebox door seal.		A				●		4
Inspect and lubricate door latch bushings.						●	G	4
Inspect chimney and chimney tee.	●		●			●		5
Check vent cap.	●							2
Clean heat exchangers.	●		C			●	F	6
Inspect rear access heat exchanger door latches, seal and insulation							H	6
Inspect Reaction Chamber and Fireball.	●		C			●		7
Inspect secondary air charge tube and refractory.						●		11
Inspect firebox and firebox ash area.	●	A				●		8
Inspect and clean combustion air outlets.	●		C			●	B	9
Inspect and clean the combustion fan and inlet screen.					D			10
Oil the combustion fan.						●		10
Check pH and nitrite levels of water.	●				D	●		E
Inspect primary and secondary combustion air elbows.						G		12
Grease bypass door handle.				F		●		13
Perform a complete cleaning.				F		●		14

NOTE: Check daily for build-up of creosote in the lower corners and around the air outlets until experience shows how often cleaning is necessary.

- A Daily, or as needed.
- B Twice a week.
- C Weekly until interval for your application can be determined.
- D When new, after three months, then every six months thereafter.
- E Refer to **Testing Treated Water in the Outdoor Furnace** (Installation and Initial Water Treatment Guide).
- F Frequency will vary depending on heat load requirements, type of wood used and the moisture content of the wood.
- G Or as needed.
- H Whenever rear access heat exchanger door is opened.

Control Locations

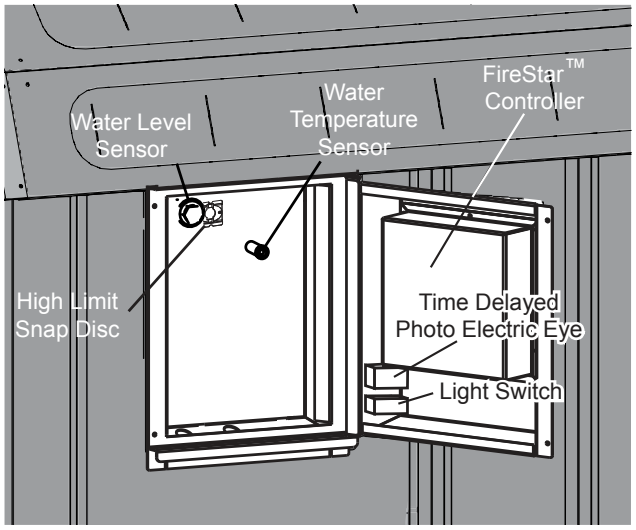

ROUTINE MAINTENANCE

⚠ CAUTION

Use only genuine Central Boiler Parts and Accessories if it ever becomes necessary to replace any component of the outdoor furnace.

Routine inspections and maintenance are essential to the proper operation and longevity of the outdoor furnace. The items indicated in the preventive maintenance schedule are intended to serve as a guideline. Actual intervals between inspections and maintenance may vary depending on a number of factors, including your heat load requirements, type of wood used, and outdoor temperatures.

NOTE: Proper maintenance of the firebox, Reaction Chamber, Fusion Combustor, heat exchanger, chimney transition box and chimney tee are essential for the outdoor furnace to function properly and for longevity.

⚠ CAUTION

Do not burn plastic, garbage, treated wood or fuels not listed for this outdoor furnace.

NOTE: Chloride or sulfurous gases can be generated if plastic or rubber is burned and will mix with the moisture from the wood to form hydrochloric or sulfuric acids in the firebox, creating corrosion.

Creosote - Formation and Need for Removal. When wood is burned slowly, it produces tar and other organic vapors, which combine with expelled moisture to form creosote. The creosote vapors condense in the relatively cool chimney flue of a slow-burning fire. As a result, creosote residue accumulates on the flue lining. When ignited this creosote makes an extremely hot fire.

NOTE: If the outdoor furnace is operated correctly, creosote will not form in the chimney.

The chimney connector and chimney should be inspected at least twice monthly during the heating season to determine if a creosote buildup has occurred, and to check for corrosion or condensation. If creosote has accumulated it should be removed to reduce the risk of a chimney fire.

⚠ WARNING

The chimney and chimney connector must be clean and in good condition.

MAINTENANCE SECTIONS

Refer to the Preventive Maintenance Schedule for the recommended intervals with which to perform these maintenance items.

Section 1 - Water Level

Open the sight gauge valve. The sight gauge tube will fill to indicate the level of water in the outdoor furnace. Be sure to close the sight gauge valve after checking water level. The sight gauge valve and tube will drain when the valve is closed.

Section 2 - Vent Cap

Check that the vent cap fits loosely on the vent opening. Check the vent cap copper tube for obstruction; clean with a pipe cleaner if needed.

⚠ WARNING

The outdoor furnace vent cap must fit loosely on the vent opening. Do not force the cap down or try to seal it tightly onto the vent pipe. Do not extend or restrict the vent pipe or opening. DO NOT ALLOW THE OUTDOOR FURNACE TO BE PRESSURIZED.

Section 3 - Ash

Refer to the Adding Wood section.

Section 4 - Firebox Door Seal and Bushings

Make sure the firebox door is properly latched and check the condition of the firebox door seal. If it is not sealing properly (indicated by a uniform indentation), replace the seal. If it is not sealing properly after replacing the seal, the firebox door may need to be adjusted. See Firebox Door Hinge/Latch Bearing Adjustment in Serviceable Items section.

Section 5 - Chimney Tee and Chimney

Remove the band clamp and chimney inspection cover. Inspect the chimney outlet and chimney for excessive creosote, ash or deposits and clean as necessary.

NOTE: The chimney inspection cover must fit tightly. Check and clean if necessary the groove for the cover to prevent air from leaking out. Leaking air caused by an improperly fitting cover can cause corrosion.

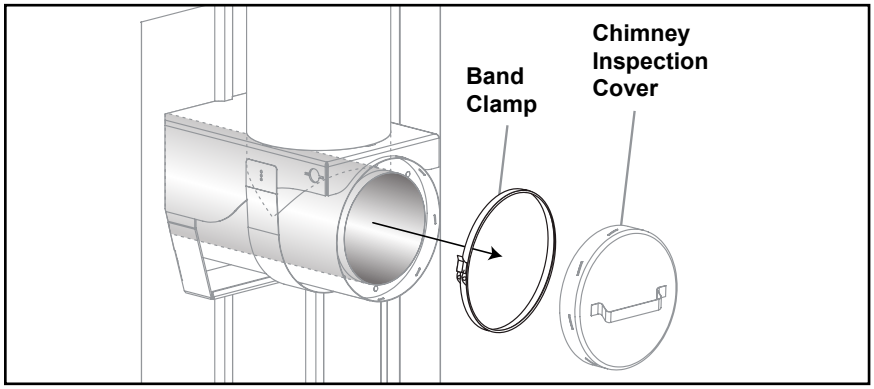

Section 6 - Heat Exchangers

NOTE: Inspect the heat exchangers weekly, and clean as needed, until the interval for your application can be determined. Frequency will vary depending on a number of factors including heat load requirements, type of wood used and the moisture content of the wood.

NOTE: The best time to clean the heat exchangers is prior to loading with wood when all that remains in the firebox is a glowing coal bed.

1. Press the **Power** button on the FireStar combustion controller to turn it off.

⚠ CAUTION

Be sure to turn off the FireStar combustion controller before doing this procedure.

2. Remove the chimney inspection cover. Inspect the area above the heat exchangers for any excessive ash buildup. Clean and remove any excessive ash accumulation.

3. Remove the heat exchanger access cover from the back of the furnace. Inspect the cover insulation and repair/replace as necessary.

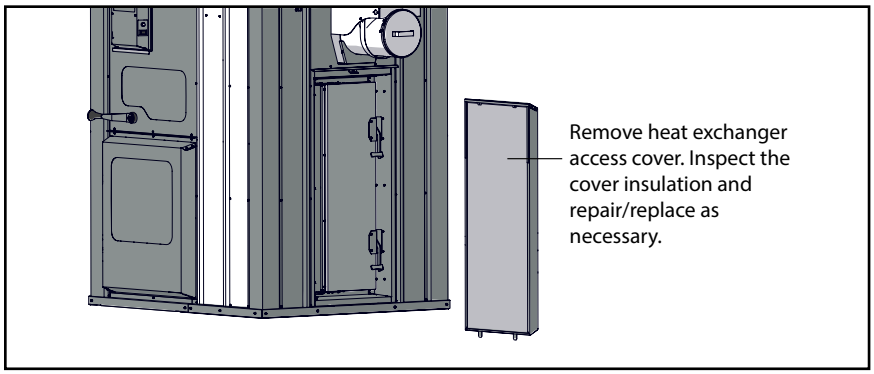

4. Carefully undo both latches on the hinged heat exchanger door. If any coals or wood remain in the firebox, slowly open the door making sure to stand off to the side when opening it.

⚠ CAUTION

Open the heat exchanger door slowly and stand off to the side when opening it.

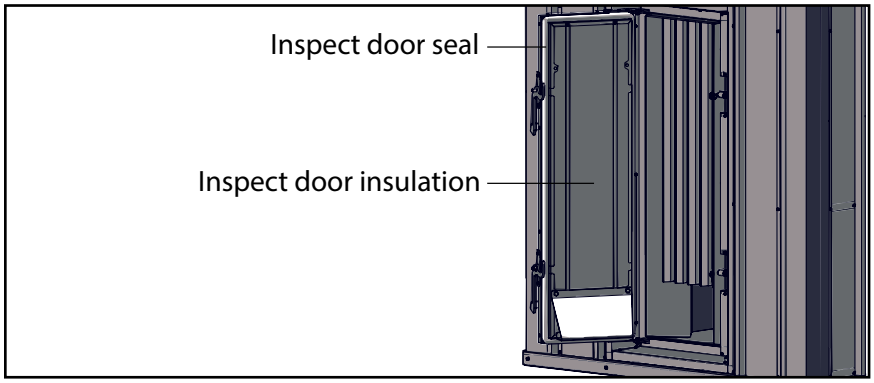

5. Inspect the door insulation and door seal. Repair/replace any defective seal or insulation.

6. Inspect the door frame edge for any buildup of creosote or ash. Use the maintenance tool to clean the door edges.

⚠ CAUTION

Always wear the appropriate personal protective gear when cleaning ash from the turbulators and the Reaction Chamber.

7. Remove each turbulator by gently pulling down and out. Clean each turbulator to remove any ash or buildup; then inspect for damage.

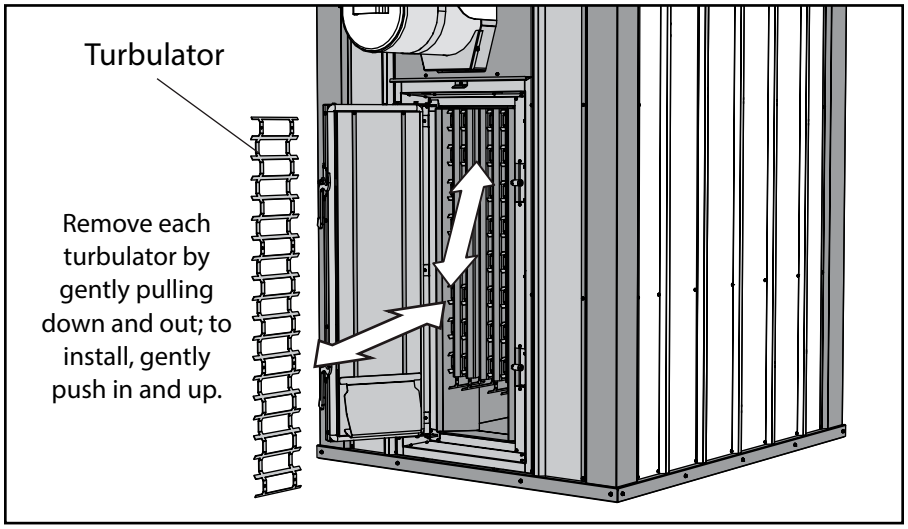

8. Inspect the heat exchangers for excessive buildup of creosote or ash. Use the scraping end of the maintenance tool to clean any accumulations from the sides of the heat exchanger sections. Angle the cleaning rod up to clean from the top of the exchangers and then down to the bottom between each folder of the exchanger.

The Flue Brush Kit (p/n 390) is an excellent option as an additional way to clean the exchangers.

NOTE: If there is creosote buildup in the heat exchanger, it is caused by operating the furnace incorrectly. It is important to follow the recommended operation and maintenance procedures (see Operating Instructions).

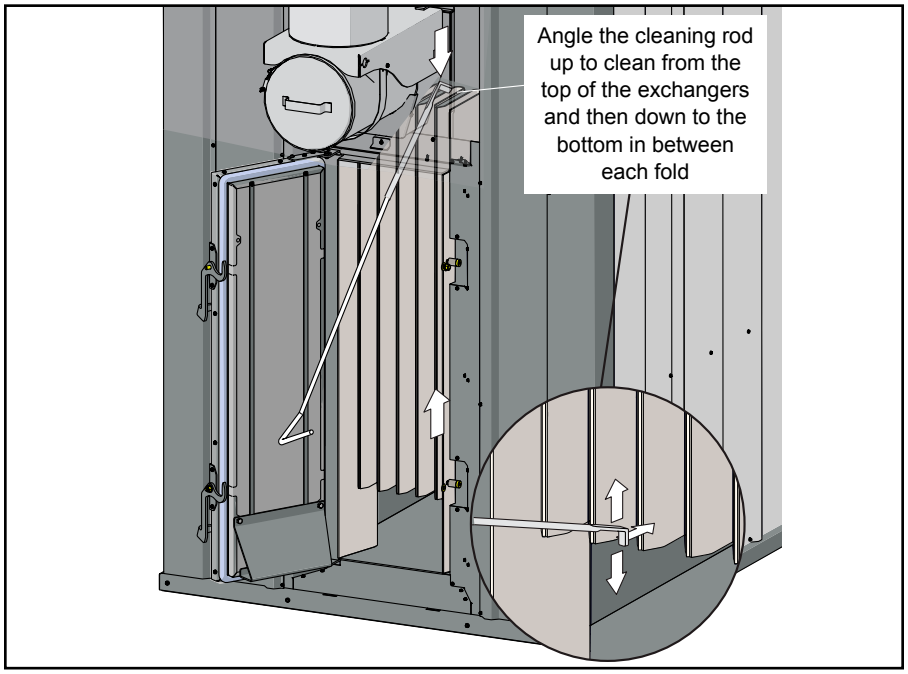

9. Using the maintenance tool and a shovel, clean any accumulated ash from beneath the heat exchanger. Dispose of ash properly.

10. Ensure that the door seal and frame are still clean of any debris or ash; then install each turbulator by gently pushing in and up.

11. Close and latch the heat exchanger door; then install the heat exchanger access cover and chimney inspection cover.

12. Press the **Power** button on the FireStar combustion controller to turn it on.

Section 7 - Reaction Chamber

1. Press the **Power** button on the FireStar combustion controller to turn it off.

⚠ CAUTION

Be sure to turn off the FireStar combustion controller before doing this procedure.

2. Unlatch and open the Reaction Chamber door.

3. Use the maintenance tool to pull the ash to the front of the furnace. Take care when pulling ash from each side of the Fusion Combustor not to move the refractory sections.

4. Use a small shovel to remove all of the ash and deposits from the Reaction Chamber. Take care not to damage the temperature sensor. You can also clean ash from the back of the furnace by opening the heat exchanger door.

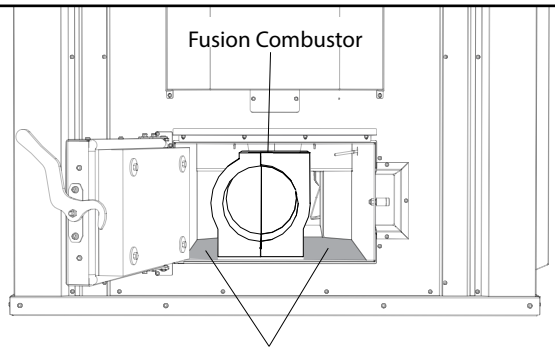

Carefully pull ash to the front of the Reaction Chamber on each side of the Fusion Combustor using the maintenance tool; then remove with small shovel.

NOTE: It is extremely important to clean ash from the entire Reaction Chamber area. If necessary, refer to section Heat Exchangers section for the procedure for removing ash from heat exchanger area.

⚠ CAUTION

Take care not to damage the temperature sensor when removing ash.

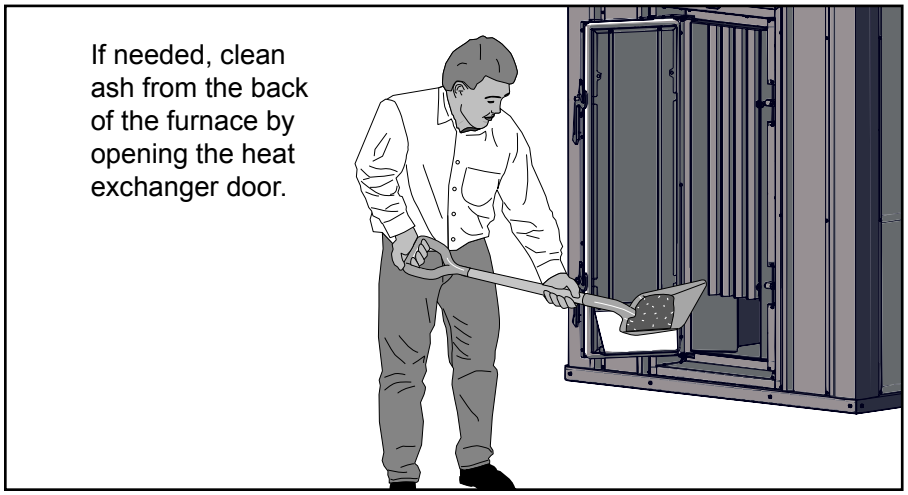

5. Close the Reaction Chamber door and secure the latch.

6. Press the **Power** button on the FireStar combustion controller to turn it on.

Section 8 - Firebox

⚠ WARNING

Remove all wood, coals and ash from the firebox.

1. Scrape the top and sides of the firebox and around the door frame area to remove any deposits; then inspect the surfaces of the firebox for any signs of corrosion, paying particular attention to the ash level and below.

NOTE: When scraping to clean inside the firebox, be sure to pay particular attention to the corners and to the seams.

2. If signs of corrosion are present, contact your dealer. Refer to the section Corrosion is Present in the Troubleshooting section.

3. A thin, tar-like creosote layer may form on the firebox walls and migrate toward the bottom of the firebox where it could collect into a thicker layer. Normally this layer will burn up as it collects on the bottom. If it migrates to the bottom of the firebox and does not burn up, it must be removed. Do not allow it to cover or restrict air flow through the combustion air outlets or bottom of the firebox. If larger, thick, dry deposits form on the walls in the firebox, they should be removed with the maintenance tool.

NOTE: Be aware that the hotter the fire, the less creosote is deposited, so weekly cleaning may be necessary in mild weather, even though monthly cleaning may be enough in coldest months.

Section 9 - Combustion Air Tubes

NOTE: If the combustion air tubes are becoming restricted by ash or creosote, it is caused by operating the furnace incorrectly. It is important to follow the recommended operation and maintenance procedures (see Adding Wood section).

Primary combustion air is supplied to the firebox through the combustion air outlets located in the front air channel and in the side combustion air tubes. Be sure to clean off any buildup around the combustion air tube holes and buildup that may collect around the combustion air tubes themselves.

The side combustion air tubes can be removed if necessary. To remove, lift the end of the tube closest to the back of the firebox up off of the retaining pin, then in and toward the back of the firebox. Install by reversing this procedure.

NOTE: If there is a large amount of buildup on the exterior of the combustion air tube, it may be necessary to first remove the buildup to make removal easier.

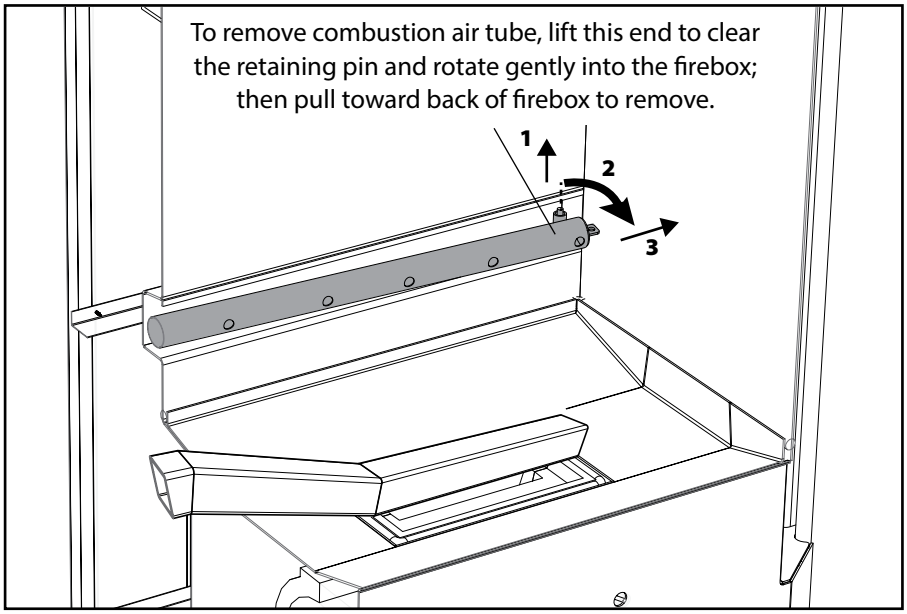

Section 10 - Combustion Air Fan

1. Disconnect power to the outdoor furnace.

⚠ WARNING

Do not proceed without testing that power is disconnected.

2. Remove the airbox access cover; then open the hinged airbox door. Inspect the combustion air fan inlet screen and fan wheel and clean if necessary. Make sure the air intake is clean and not obstructed.

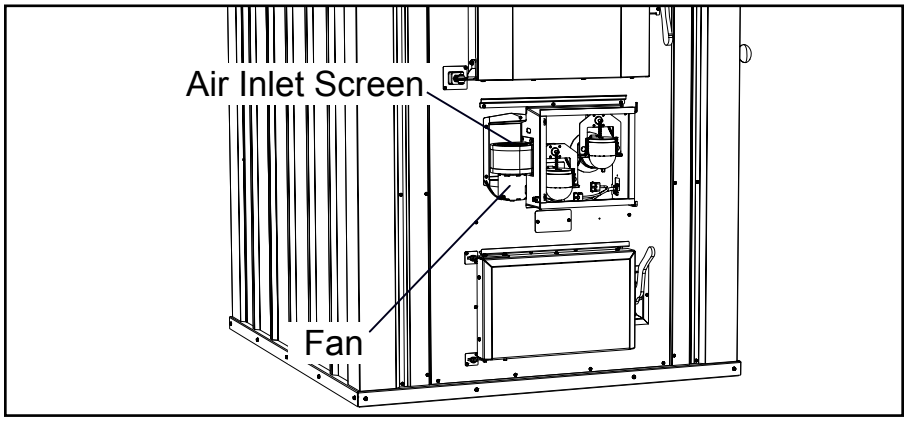

NOTE: Only if the decal on the fan housing indicates to oil the bearings at the end of each heating season, oil the combustion fan bearings using the following procedure.

4. If the decal on the fan housing indicates to oil the bearings, remove the bolts securing the combustion fan and remove the combustion fan. Hold the fan so the oil locations are upright; then apply 10 drops of SAE 20 non-detergent oil (e.g., 3-IN-ONE® Oil) in each location, as shown. Install the combustion fan and secure with bolts.

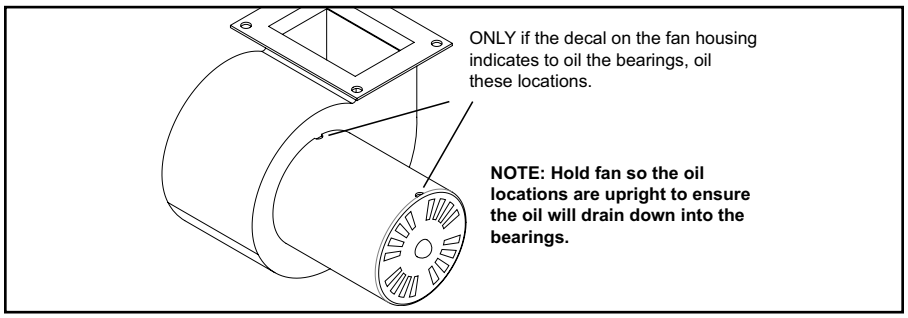

5. Close and secure the airbox door. Install the airbox access cover.

⚠ DANGER

Do not connect power or operate the outdoor furnace with the airbox access cover removed. The outer airbox cover must be installed and secured with screws.

Section 11 - Air Charge Tube and Refractory

Removing and inspecting the air charge tube and inspecting the refractory is best done after the outdoor furnace has been shut down and the firebox has been cleaned according to the Complete Firebox Cleaning Procedures.

NOTE: The air charge tube and refractory are wear items.

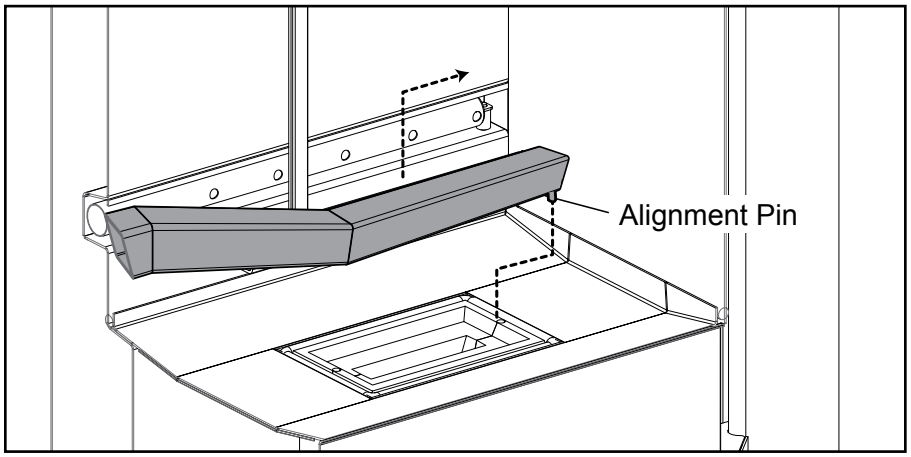

1. Remove the air charge tube by lifting and then sliding it toward the rear of the outdoor furnace. Inspect the mixing channel to see the area is not plugged.
2. Inspect each refractory module for damage. Small cracks and chips in the refractory are normal. If large pieces of the refractory modules are missing, contact your Central Boiler dealer.
3. Install the air charge tube making sure the alignment pin is seated in the alignment hole in the refractory modules.

Section 12 - Primary Air Elbow

1. Disconnect the electrical power to the outdoor furnace at the main power source.

⚠ WARNING

Do not proceed without testing that power is disconnected. Make sure the power cannot be reconnected while servicing the actuator motors (i.e., use lock out, tag out).

2. Remove the outer airbox cover; then open the airbox door.
3. Disconnect the actuator motor wiring harness.
4. Loosen the hose clamp securing the primary air elbow to the air tube; then remove the assembly from the airbox.

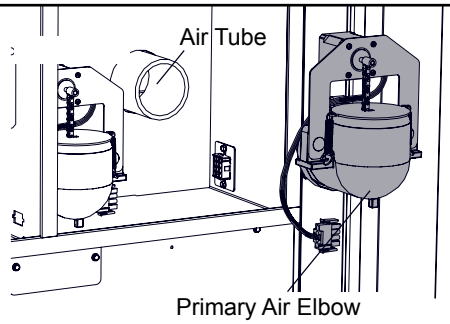

5. Inspect the elbow and clean out any build-up or blockage.

NOTE: A *small* amount of material in the elbow is normal and is not an indication of improper operation.

NOTE: If there is creosote buildup in the primary air elbow, it is caused by operating the furnace incorrectly. It is important to follow the recommended operation and maintenance procedures (see Adding Wood section).

6. Inspect the air tube for blockage or obstructions. To remove blockage or obstructions in the air tube, a screwdriver and a shop vac may be useful.
7. Install the primary air elbow over the air tube; then tighten the hose clamp.
8. Connect the actuator motor wiring harness.
9. Close and secure the airbox door. Install the outer airbox cover and secure with screws.

⚠ DANGER

Do not connect power or operate the outdoor furnace with the outer airbox cover removed. The outer airbox cover must be installed and secured with screws.

10. Connect the electrical power to the outdoor furnace at the main power source.

Section 13 - Bypass Handle

1. Using the grease zerk on the bypass handle, add grease.

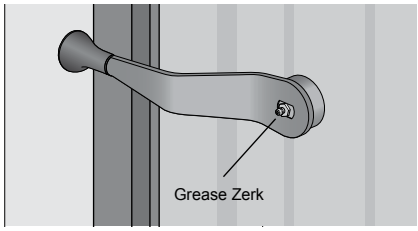

2. Lift and lower the bypass handle several times to distribute the grease.

Section 14 - Complete Cleaning Procedures

The frequency for performing a complete cleaning will vary depending on a number of factors, including your heat load requirements, type of wood used, and the moisture of the wood.

NOTE: Proper maintenance of the firebox, Reaction Chamber, heat exchanger, chimney transition box and chimney tee are essential for the outdoor furnace to function properly and for longevity.

NOTE: It may be best to allow the wood and coals to burn out completely before this type of cleaning.

⚠ CAUTION

Always wear the appropriate personal protective gear (e.g., protective gloves, clothes, dust mask, etc.) when cleaning ash from the firebox and the Reaction Chamber, etc.

⚠ CAUTION

Clear the entire area surrounding the outdoor furnace of any combustible materials before performing these cleaning procedures.

⚠ WARNING

Be careful not to spill any coals or ash. Place coals and ash in a metal container with a tight-fitting metal lid.

NOTE: Refer to the illustration and clean the areas identified in the order shown. For each area in the illustration, refer to the corresponding maintenance section.

1. Press the **Power** button to turn the FireStar combustion controller off.

⚠ CAUTION

Be sure to turn off the FireStar combustion controller before doing this procedure.

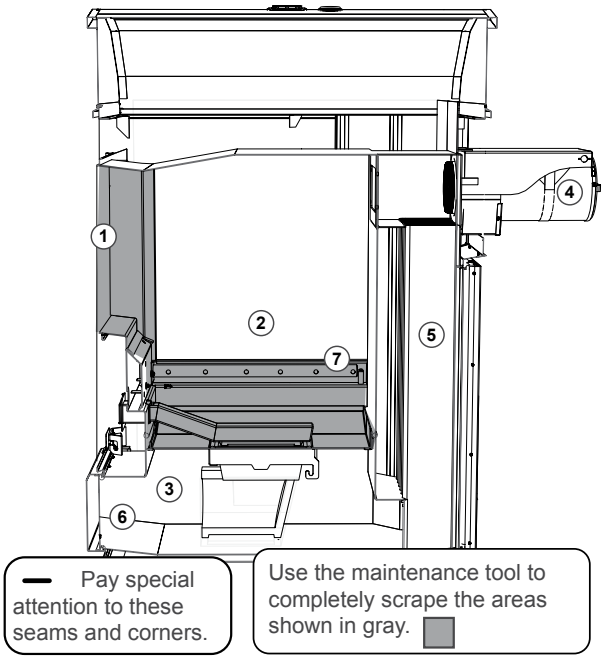

Clean ash and deposits from the areas identified in the order shown. Refer to the corresponding maintenance sections for detailed procedures.

1 Door Frame 2 Firebox 3 Reaction Chamber 4 Chimney Tee
5 Heat Exchangers 6 Reaction Chamber
7 Combustion Air Outlets

© 2019 Central Boiler

Door Frame

Open the firebox door; then scrape the face and surface area of the door frame to remove any deposits.

Firebox

See Maintenance Section 8 - Firebox.

Chimney Tee

See Maintenance Section 3 - Chimney Tee.

Heat Exchangers

See Maintenance Section 6 - Heat Exchangers.

Reaction Chamber

See Maintenance Section 7 - Reaction Chamber.

Combustion Air Tubes / Air Charge Tube

See Maintenance Section 9 - Combustion Air Tubes and Maintenance Section 11 - Air Charge Tube and Refractory.

SERVICEABLE ITEMS

NOTE: These procedures should be performed by a qualified individual and in accordance with any and all federal, state/provincial and local codes and regulations. When performing work on an appliance observe all precautions in the literature, tags and labels attached to the appliance and other safety precautions that may apply. When working with electricity and electrical components, failure to follow precautions could result in property damage, personal injury or death.

NOTE: If any of these items are under warranty, remember that the warranty covers only the cost of the replacement part. Labor is not covered.

NOTE: Use only genuine Central Boiler parts and accessories if it ever becomes necessary to replace any component on the outdoor furnace.

FIREBOX DOOR HINGE / LATCH BEARING ADJUSTMENT

If the firebox door seal has been replaced and it is not sealing properly, the firebox door may need to be adjusted to close more tightly. When adjusting the firebox door, make sure it is not adjusted too tightly as damage to the firebox door, frame or door seal may result.

1. To tighten the hinges, loosen the inner adjustment nut and turn the outer nut in slightly; then tighten the inner adjustment nut securely. Adjust the top and bottom hinge for equal pressure when the door is latched.

2. To tighten the latch bearing, loosen the latch adjustment nut; then tap the latch bearing assembly in toward the firebox. Tighten the latch adjustment nut securely.

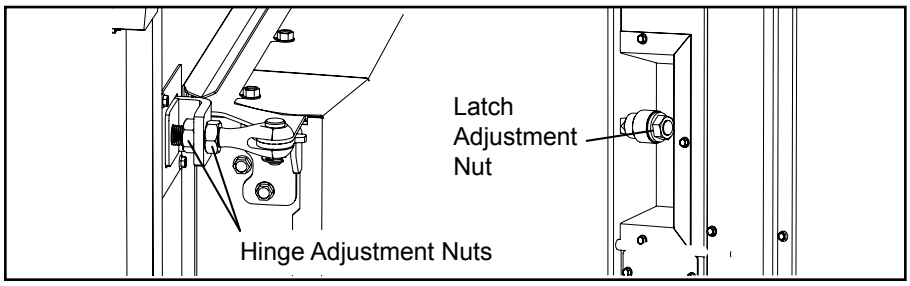

FIREBOX DOOR SEAL

The firebox door seal must be in good condition to ensure an airtight seal. If the outdoor furnace is operated with the door open or ajar, the firebox door seal may become damaged or brittle due to excessive temperatures. If replacement is necessary, use the following procedure:

⚠ WARNING

Remove all wood, coals and ash from the firebox.

1. Disconnect power to the outdoor furnace.

⚠ WARNING

Do not proceed without testing that power is disconnected. Make sure the power cannot be reconnected while testing components (i.e., use lock out, tag out).

2. Using a scraper, remove the firebox door seal on the inner side of the firebox door and clean any remaining silicone adhesive from the groove. Any residue left in the groove will interfere with the new silicone seal.
3. Apply a liberal amount of silicone sealant into the entire firebox door seal groove.
4. Starting at the center of the hinge side of the firebox door, insert the new silicone seal into the groove, pressing it firmly into the bead of silicone sealant. Make sure the seal is not stretched as it is pressed into the corners. Force the seal out to fill in the corners as shown.

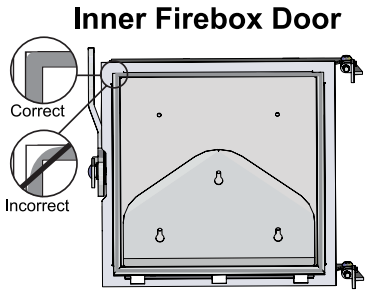

5. Scrape the face and surface area of the door frame to remove any deposits.
6. Close the firebox door. Make sure that pressure is felt as the latch is closed to ensure the seal is tight with the door frame.
7. Open the firebox door and check that there is an impression in the seal from the door frame. This mark must extend, with no gaps, around the entire perimeter of the firebox door seal. If needed, adjust the hinges and latch assembly.

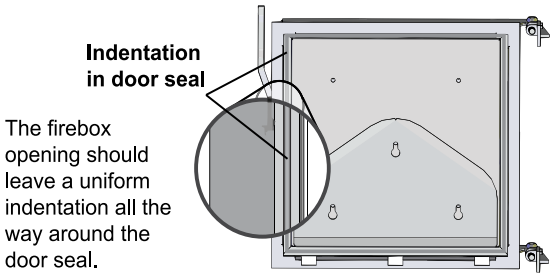

⚠ CAUTION

The firebox door seal will be damaged or destroyed if it is not installed properly.

REACTION CHAMBER DOOR SEAL

The Reaction Chamber door seal must be in good condition to ensure an airtight seal. If replacement is necessary due to the Reaction Chamber door seal becoming damaged or brittle, use the following procedure:

1. Disconnect power to the furnace.
2. Unlatch and open the Reaction Chamber door.
3. Use the maintenance tool to pull the ash to the front of the furnace; then use a small shovel to remove all of the ash and deposits from the Reaction Chamber. Take care not to damage the temperature sensor.

⚠ WARNING

Remove all ash from the Reaction Chamber.

4. Using a scraper, remove the Reaction Chamber door seal rope and clean any remaining silicone adhesive from the groove. Any residue left in the groove will interfere with the new seal.
5. Apply a liberal amount of silicone sealant into the entire Reaction Chamber door seal groove.
6. Starting at the center of the hinge side of the Reaction Chamber door, insert the new door seal rope into the groove, pressing it firmly into the bead of silicone sealant. Make sure the Reaction Chamber door seal rope is not stretched as it is pressed into the corners. Force the Reaction Chamber door seal rope out to fill in the corners as shown.

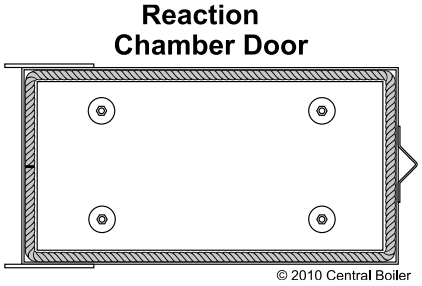

7. When the seal has been pressed into the groove all the way around the Reaction Chamber door, cut the end of the rope about one inch longer than required and press it tightly against the beginning end of the rope.
8. Close the Reaction Chamber door and secure the latch.

HEAT EXCHANGER DOOR SEAL

Heat Exchanger Door Seal Rope

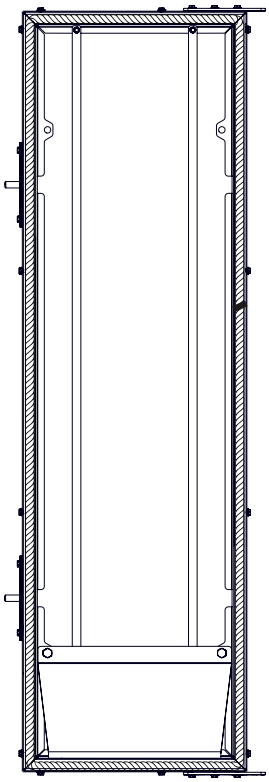

The heat exchanger door seal must be in good condition to ensure an airtight seal. If replacement is necessary due to the door seal becoming damaged or brittle, use the following procedure:

1. Press the **Power** button on the FireStar combustion controller to turn it off.

⚠ CAUTION

Be sure to turn off the FireStar combustion controller before doing this procedure.

2. Remove the heat exchanger access cover from the back of the furnace.
3. Carefully undo both latches on the heat exchanger door; then slowly open the door making sure to stand clear of the opening.

⚠ CAUTION

Open the heat exchanger door slowly and stand off to the side when opening it.

4. Using a scraper, remove the heat exchanger door seal rope and clean any remaining silicone adhesive from the groove. Any residue left in the groove will interfere with the new seal.
5. Apply a liberal amount of silicone sealant into the entire heat exchanger door seal groove.
6. Starting at the center of the hinge side of the heat exchanger door, insert the new door seal rope into the groove, pressing it firmly into the bead of silicone sealant. Make sure the door seal rope is not stretched as it is pressed into the corners. Force the door seal rope out to fill in the corners as shown.
7. When the seal has been pressed into the groove all the way around the heat exchanger door, cut the end of the rope about one inch longer than required and press it tightly against the beginning end of the rope.
8. Close the heat exchanger door and secure with latches. Install and secure the heat exchanger access cover.

CIRCUIT BREAKER

The circuit breaker is located in the pump access area and also serves as the furnace disconnect. If the circuit breaker trips (turns off), reset it by turning it on. If the circuit breaker continues to trip, a component may be faulty. It is possible to isolate a faulty component using the following procedure.

1. Disconnect power to the outdoor furnace.

⚠ WARNING

Do not proceed without testing that power is disconnected. Make sure the power cannot be reconnected while testing components (i.e., use lock out, tag out).

2. Remove the airbox access cover; then open the airbox door.
3. Disconnect the actuator motor harness and disconnect the fan harness.
4. To test for a faulty component, connect one component at a time (e.g., start with one of the actuator motors); then connect power to the outdoor furnace. If the circuit breaker trips, the component is likely faulty. If not, disconnect power to the outdoor furnace and repeat the procedure until all components have been tested.

⚠ CAUTION

Disconnect power to the outdoor furnace before disconnecting a component and before connecting a component.

5. Close and secure the airbox door. Install the airbox access cover.

⚠ DANGER

Do not connect power or operate the outdoor furnace with the outer airbox cover removed. The outer airbox cover must be installed and secured with screws.

AIRBOX SEAL

Replace the airbox seal if it becomes damaged or worn to maintain proper operation of the furnace. See your Central Boiler dealer for replacement seals.

NOTE: It is best to replace the entire seal. Over time, the seal will compress, and replacing it in sections may result in the old sections not sealing completely against the airbox door.

1. Disconnect power to the outdoor furnace.

⚠ WARNING

Do not proceed without testing that power is disconnected. Make sure the power cannot be reconnected while replacing the airbox seal.

2. Remove the airbox access cover; then open the airbox door. Using a scraper or similar tool, scrape off the existing seal from the airbox.
3. Clean off any remaining adhesive residue with alcohol or a suitable solvent.
4. Measure and cut replacement seal.

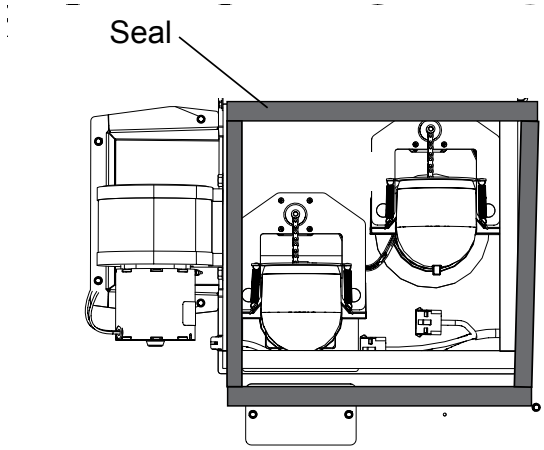

5. Remove the adhesive backing from the replacement seal and carefully apply the seal to the airbox as shown, making sure there are no gaps.
6. Close the airbox door and turn the furnace back on.
7. After the fan has started, use your hand to feel around the edges of the airbox door to check for leaks. A little air leakage, especially around the latches, is normal. If an excessive amount of air is felt, turn off the furnace; then check and repair/replace the seal if necessary.
8. Install the airbox access cover.

AIR CHARGE TUBE AND REFRACTORY MODULES

⚠ WARNING

Remove all wood, coals and ash from the firebox and allow the firebox to cool thoroughly before replacing the air charge tube and/or refractory.

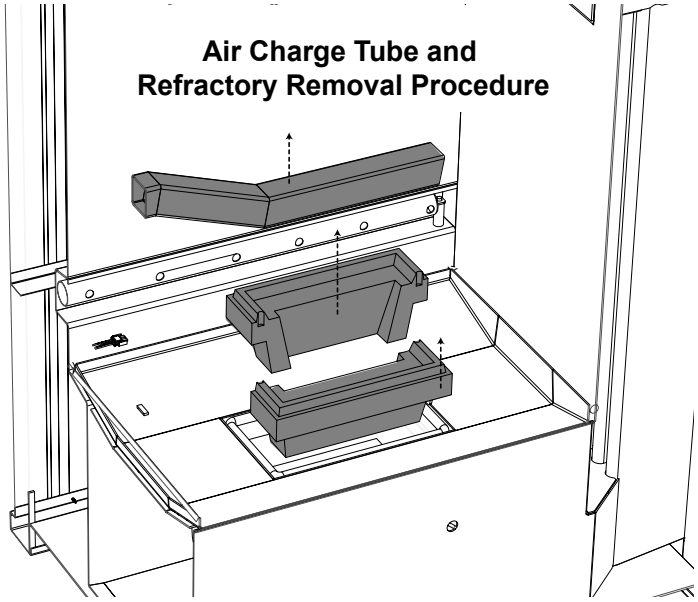

1. Remove the air charge tube by lifting it up and sliding it toward the back of the outdoor furnace.
2. Remove the rope gasket; then remove the existing refractory modules.
3. Ensure the area where the new refractory modules will be installed is clean and free of all debris. Install the new refractory modules; then install a new rope gasket on top of the refractory modules.
4. Install the new air charge tube by placing it in the opening at the front of the outdoor furnace as shown; then pull it toward the front of the outdoor furnace to secure it in place making sure the alignment pin fits into the alignment hole in the refractory modules.

THERMOCOUPLE

1. Disconnect power to the outdoor furnace.

⚠ WARNING

Do not proceed without testing that power is disconnected. Make sure the power cannot be reconnected while replacing the thermocouple.

2. Remove the pump access cover.
3. Disconnect the thermocouple connector; then remove the mastic tape from the thermocouple.
4. Remove the thermocouple.
5. Install the new thermocouple until the stop collar contacts the thermocouple tube.

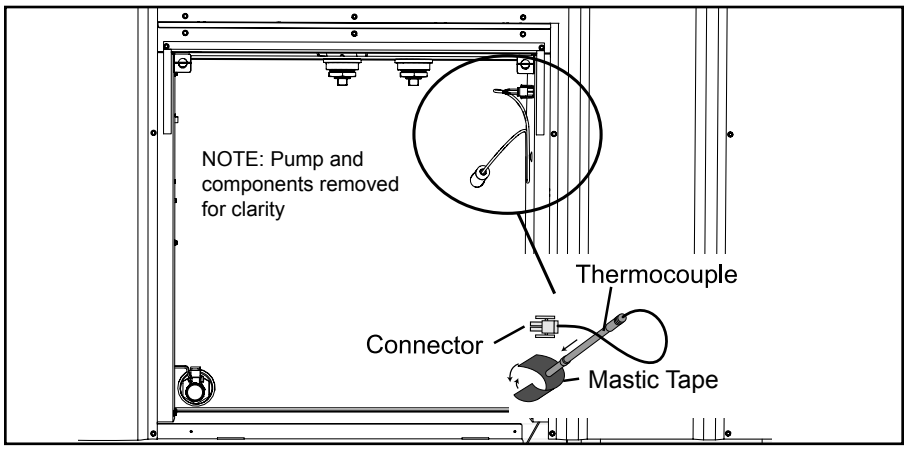

6. Secure the thermocouple with the mastic tape; then connect the thermocouple connector.
7. Install the pump access cover; then connect power to the furnace.

HEAT EXCHANGER DOOR INSULATION

NOTE: Insulation for the heat exchanger door is not standard fiberglass insulation. Use only the correct insulation when replacing or damage could occur. Contact your Central Boiler dealer for replacement insulation.

1. Press the **Power** button on the FireStar combustion controller to turn it off.
2. Remove all wood, coals and ash from the firebox and allow the firebox to cool thoroughly.

⚠ WARNING

Remove all wood, coals and ash from the firebox and allow the firebox to cool thoroughly before replacing the heat exchanger door insulation.

3. Remove the heat exchanger access cover from the back of the furnace.
4. Carefully undo both latches on the heat exchanger door; then slowly open the door making sure to stand clear of the opening.

⚠ CAUTION

Open the heat exchanger door slowly and stand off to the side when opening it.

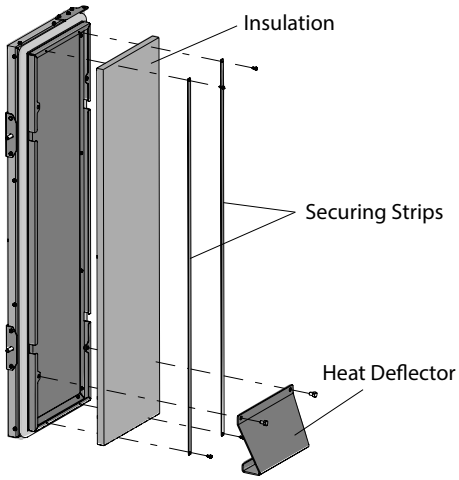

5. Swing the door open far enough to gain access to the inside of the door.
6. Wearing proper protective gear, use a brush or small broom to clean off any accumulated ash from the inside of the door.

7. Remove the heat deflector from the bottom of the door.
8. Remove the hardware and securing strips.
9. Carefully remove the insulation paying close attention to how the insulation is installed in the door and tucked into the edges of the door. This will aid in installation of the new insulation.
10. Before installing the new insulation, place it over the opening to make sure it is the correct size.
11. Place the new insulation inside the heat exchanger door with the reflective side facing out (toward you). Be careful not to tear the reflective material. Ensure that the edges of the new insulation are tucked into the edges of the door.
12. Install the securing strips. It may be necessary to adjust the insulation being careful not to tear it, after the securing strips are installed.
13. Install the heat deflector.
14. Check the insulation again to ensure that it is properly secured and attached to the inside of the heat exchanger door.
15. Carefully close and latch the heat exchanger door.

NOTE: The first few times the heat exchanger door is opened and closed after installing new insulation, it could seem more difficult to secure the latches. This is normal and once the insulation settles, securing the latches will be easier.

16. Install the heat exchanger access cover.

HEAT EXCHANGER ACCESS COVER INSULATION

NOTE: Be sure to check the temperature range for the spray adhesive. It may be necessary to replace the heat exchanger access cover insulation indoors to allow it to cure properly.

1. Remove the heat exchanger access cover from the back of the furnace.
2. Lay the cover on a piece of cardboard on a flat surface; then, wearing proper protective equipment, use a scraper to remove the insulation and any adhesive from the cover.
3. Test fit the new piece of insulation.
4. Using a good quality spray adhesive, follow the instructions on the can and apply the necessary amount to the inside of the cover.
5. Install the insulation in the cover, pressing down in multiple spots to ensure complete contact with the adhesive. Make sure the insulation is tucked all the way into the top of the cover.

6. Leave the cover on the flat surface until the adhesive cures according the adhesive manufacturer's instructions.

7. After the adhesive has cured, check to ensure the insulation has properly bonded to the cover; then install the heat exchanger access cover on the furnace.

COMBUSTION AIR TUBE / FRONT AIR CHANNEL

Press the **Power** button on the FireStar combustion controller to turn it off.

⚠ CAUTION

Be sure to turn off the FireStar combustion controller before doing this procedure.

⚠ WARNING

Remove all wood, coals and ash from the firebox and allow the firebox to cool thoroughly before working inside the firebox.

Combustion Air Tube

1. Lift the end of the tube closest to the back of the firebox up off of the retaining pin, then in and toward the back of the firebox. Install by reversing this procedure.

NOTE: If there is a large amount of buildup on the exterior of the combustion air tube, it may be necessary to first remove the buildup to make removal easier.

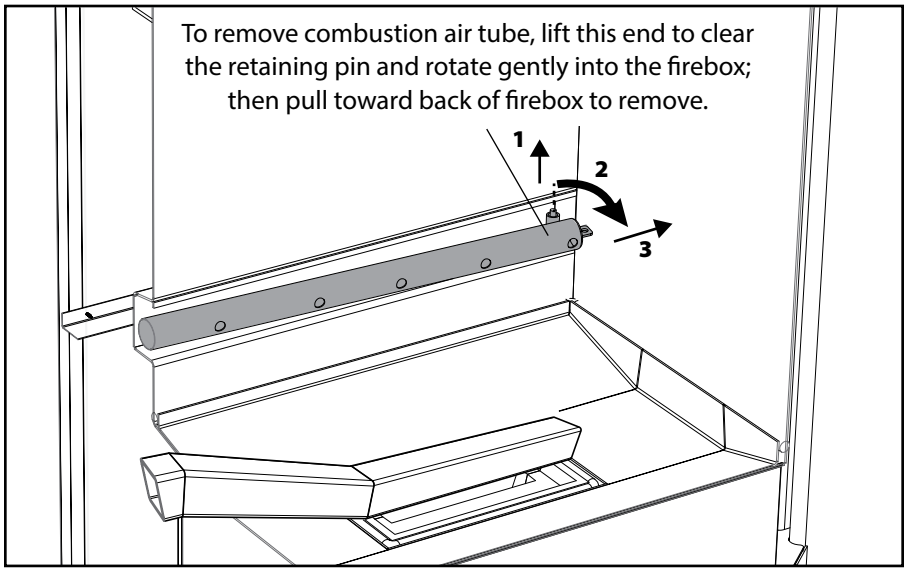

Front Air Channel

1. Remove the acorn nuts securing the front air channel and remove. Remove any ash or deposits from behind the air channel in the wall of the firebox.

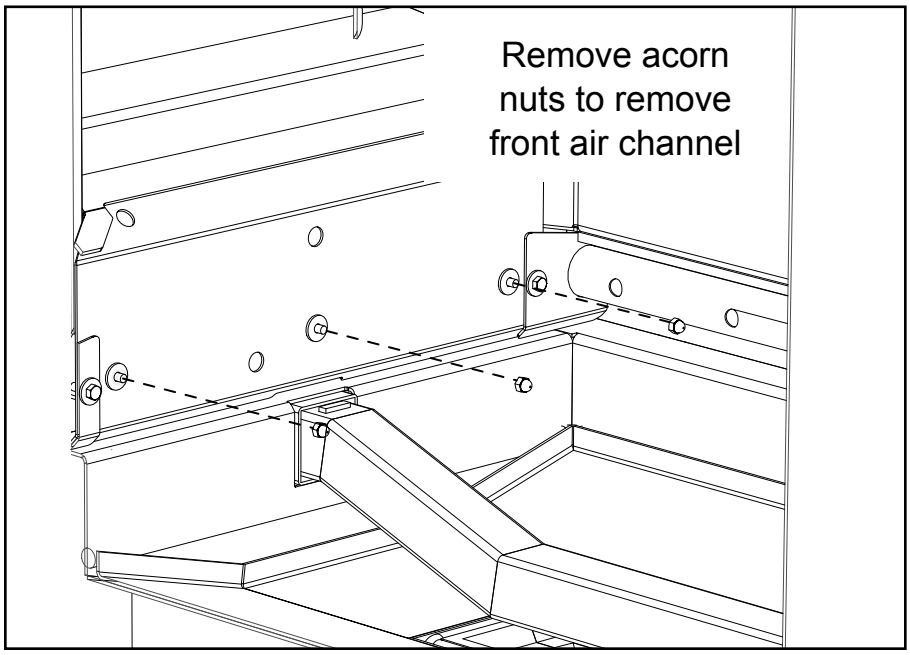

2. Install the new air channel. Apply a high-temperature, anti-seize compound to the stud threads; then secure with the acorn nuts and tighten securely.

TROUBLESHOOTING

GENERAL TROUBLESHOOTING INFORMATION

If the outdoor furnace is not operating the way it should, first review the information found in the Operation Instructions section, particularly the Adding Wood section.

INCORRECT
(Inadequate Flow)

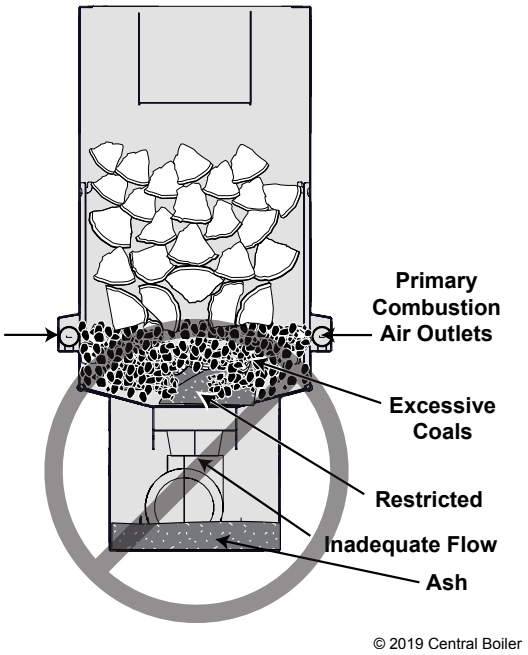

Is the Reaction Chamber full of ash?

The Reaction Chamber is where final combustion occurs. It is important that the Reaction Chamber remain unobstructed to allow final combustion to occur. It is not designed to be an ash collection area, although over time ash will gradually accumulate in the Reaction Chamber.

If ash builds up in the Reaction Chamber to a level that obstructs flow, the performance of the outdoor furnace will be affected, so the ash must be removed. A good rule is to clean the Reaction Chamber before it becomes 1/2 full (approximately 5" or 13 cm deep in any area of the Reaction Chamber).

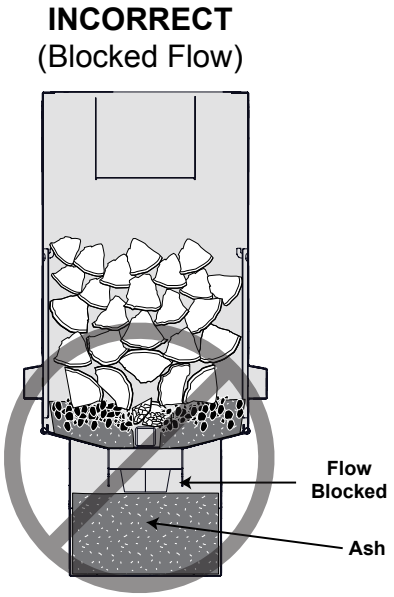

Are the air outlets plugged?

Primary combustion air is provided through the combustion air outlets in the firebox.If the air outlets are restricted or plugged, the furnace will not operate correctly. If it appears the combustion air outlets are plugged or restricted, refer to the Maintenance Sections for the Combustion Air Tubes and Air Charge Tube and Refractory. If after cleaning each combustion air outlet, air flow is still blocked, inspect the primary combustion air elbow. Refer to the Maintenance Section for Primary Air Elbow.

NOTE: If there is creosote buildup in the primary air elbow, it is caused by operating the furnace incorrectly. It is important to follow the recommended operation and maintenance procedures (see Adding Wood section).

Is there creosote and/or ash inside the airbox?

Creosote, ash, or even coals in the airbox is an indication that the outdoor furnace has not been maintained and/or operated properly. Especially important to the operation and efficiency of the outdoor furnace is unrestricted air flow throughout the entire system. Refer to Adding Wood for a detailed explanation of how to operate and maintain your Classic Edge.

One or more combustion air outlets are covered - If the level of coals and ash in the firebox is allowed to accumulate over the combustion air outlets, normal air flow can be blocked and could force coals and ash back into the airbox. Remove enough ash so the combustion air outlets are not covered. Review the Adding Wood section for more information.

TROUBLESHOOTING OTHER SITUATIONS

A. OUTDOOR FURNACE IS NOT OPERATING CORRECTLY

Review the information in the Adding Wood section, starting at step 5.

1. **Out of wood** - Add wood as necessary. Use correctly sized, seasoned wood.
2. **Mixing channel (area directly below the charge tube) or Fusion Combustor obstructed** - Inspect and clean as required.
3. **Combustion air outlets obstructed** - Clean as required to prevent the combustion air outlets from being obstructed.
4. **Combustion air fan obstructed or not running** - Check the screen over the fan inlet and the inside of the fan for any obstructions.
5. **Airbox leaking** - The airbox cover must be properly secured. Determine the cause and correct.
6. **Primary air actuator motor closed** - If the primary air actuator motor is not operating properly, determine the cause and correct.
7. **Reaction Chamber, heat exchanger or the chimney plugged** - If the Reaction Chamber, heat exchanger or chimney are plugged, determine the cause and correct.
8. **Door open** - If the display on the controller indicates Door Open, close the firebox door. Make sure the firebox door is properly latched and check the condition of the firebox door seal. If it is not sealing properly (indicated by a uniform indentation), replace the seal.
9. **Low water** - If the display on the controller indicates Low Water, the system senses a low water condition. Check the water level at the sight gauge and, if necessary, add water according to the Water Quality and Maintenance section. If adding water does not correct the problem, contact your Central Boiler dealer.

NOTE: If water needs to be added, it is very important to identify the cause of water loss and correct immediately. A leaky system or overheating commonly leads to dilution of the corrosion inhibitor and water jacket corrosion.

10. **Low water temperature for too long a period of time** - The display on the controller will indicate Fire Out and the controller will shut down the furnace if the water temperature has been too low for too long. Determine the cause of the water temperature being too low.
11. **Alarm condition** - Refer to the FireStar Combustion Controller Operation Manual.
12. **Chimney not drafting properly** - Draft is the force which moves air from the appliance up through the chimney. The amount of draft in your chimney depends on the length of the chimney, local geography, nearby obstructions and other factors. Draft occurs when the temperature in the chimney is high enough to cause a negative pressure that "pulls" the exhaust up and out the chimney.

    Proper draft is necessary for the Classic Edge to operate optimally. Too much draft may cause excessive temperatures in the appliance. Inadequate draft may cause backpuffing and plugging of the chimney.

    If poor draft is suspected, perform the following test: with the outdoor furnace and chimney at normal operating temperature, loosen the chimney inspection cover and pull it back about an inch. If exhaust comes out from around the cover, pressure in the chimney may be incorrect and adding more chimney sections may be required. However, due to many variables, even if exhaust does not come out from around the cover, the chimney might still not be drafting properly at all times. Due to a number of variables, poor draft can be an intermittent problem.

NOTE: A qualified installer may perform the following test to check for proper draft. Before performing the test, the outdoor furnace should be completely cleaned to ensure nothing obstructs exhaust flow through the system. Fire the furnace and allow it to reach normal operating temperature before performing the test.

- Drill a hole in the chimney inspection cover; then with the outdoor furnace and chimney at normal operating temperature, use a manometer to check draft. If flue draft is less than -0.05 in. WC (-12.45 Pa) add more chimney sections.
- After the test, fill the hole in the chimney inspection cover with high-temp silicone.

Perform test with bypass closed at normal operating temperature.

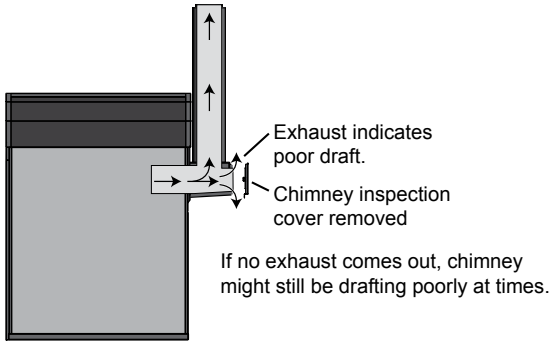

© 2015 Central Boiler

- If a spark arrestor is being used, make sure it is clean and unobstructed.
- Objects like buildings and trees in close proximity or nearby terrain (e.g., hills, valleys, etc.) can adversely affect air flow in the chimney. Adding chimney sections may overcome these factors.

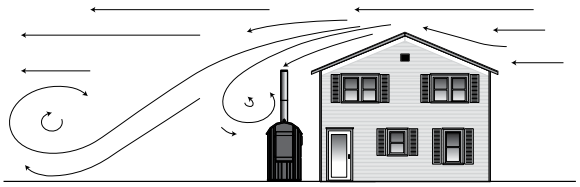

May cause poor draft.

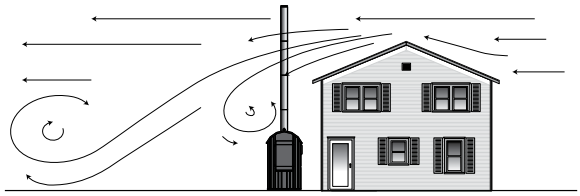

Allows for better draft.

© 2015 Central Boiler

B. FIRE GOES OUT OR KEEPS GOING OUT

Review the information in the Adding Wood section, starting at step 5.

C. BUILDING IS LOSING TEMPERATURE

Review the information in the Adding Wood section, starting at step 5.

1. **Circulation valve(s) closed** - Be sure the proper valves in the system are open to allow circulation.
2. **Circuit breaker off** - If there is a circuit breaker that supplies power to the outdoor furnace, check that it is on.
3. **Circuit breaker off** - Check that the circuit breaker switch (located in the pump compartment) is on. If the circuit breaker has tripped, determine the cause before resetting it.
4. **Circulation pump(s) not operating** - Check that circulation pumps are operating. If not, disconnect power to the pump. Close valves at the pump. Disassemble the pump and try to turn the pump shaft. If the shaft is stuck, replace the pump cartridge. Replace only the cartridge whenever possible. If necessary, replace the pump. Follow instructions supplied with the pump.
5. **Air in system** - Check for air in the water lines or heat exchangers. If you hear a gurgling sound in a heat exchanger, air is present in the system. Shut off the pump, wait 15 seconds and start the pump. If it is necessary to force air from lines, refer to Initial Start-up Procedures.
6. **Building(s) poorly insulated or uninsulated** - Poorly insulated or uninsulated buildings, buildings with uninsulated or poorly insulated ceilings, or a lack of proper insulation under radiant flooring can cause excessive fuel consumption and or heating problems.
7. **Supply and return lines installed incorrectly** - Make sure the hot supply line is connected to the correct fitting on the outdoor furnace and heat exchanger.
8. **Circulation pump(s) installed backwards** - Check that pump flow direction is correct. If not, shut off power to pump. If the flow is not in the correct direction, disconnect pump from water line and reverse pump mounting to correct flow direction. If the pump is not mounted on the outdoor furnace, check for proper pump mounting location.
9. **Underground supply and return lines insulated poorly** - Heat loss from poorly insulated underground supply and return lines is often indicated by an unusually high amount of snow melting above the lines when the ground temperature is 10° F (-12˚C) or colder.
10. **Supply and return lines uninsulated** - Uninsulated supply and return lines in areas that are not intended to be heated (unheated crawl spaces, under mobile homes, etc.) may cause excessive heat loss. Insulate the supply and return lines.
12. **Poor water quality** - Water with high amounts of solids, sand or dirt can create deposits inside the wall of heat exchanger components, reducing the amount of heat output. If this condition is suspected, contact your Central Boiler dealer.
13. **New construction with radiant in-floor heat** - Bringing a cold concrete slab up to temperature the first time will take a considerable amount of time and wood; once warm, wood consumption will be reduced if the concrete slab and building are insulated properly.
14. **Heat load too large** - Re-evaluate the system and match heat load to the outdoor furnace.

D. SMOKE COMING FROM BETWEEN FIREBOX DOOR AND FRONT OF THE DOOR FRAME

1. **Door seal faulty or door frame obstructed** - If there is smoke coming from between the firebox door and the front of the door frame for more than a short time after reloading, scrape the face and surface area of the door frame to remove any deposits. Check the condition of the firebox door seal and replace if necessary.
2. **Door hinges and/or latch need adjusting** - Adjust the hinges and/or latch bearing.

E. OUTDOOR FURNACE IS OVERHEATING

1. **Air entering through the firebox door or smoke coming out of the firebox door when the door is closed** - Make sure the firebox door is properly latched and check the condition of the firebox door seal. If it is not sealing properly (indicated by a uniform indentation), replace the seal. If firebox door does not close tightly, adjust using the appropriate procedure (see Owner Serviceable Items).

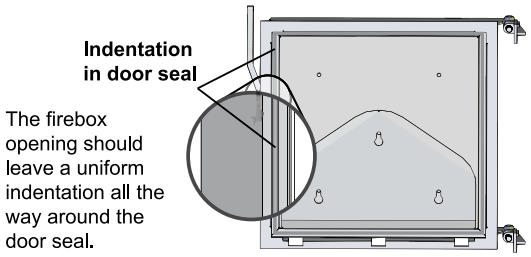

©2014 Central Boiler

NOTE: If the outdoor furnace is operated with the door open, the firebox door seal may be damaged.

2. **Actuator motor and/or air regulating disc stuck open or obstructed** - Remove any obstructions. Lubricate the chain with a high temperature dry film lubricant rated for chains. Be careful not to get lubricant on the actuator motor or motor shaft. If replacement is necessary, refer to Air Regulating Disc Gaps for the factory settings for the air regulating discs.

NOTE: If the outdoor furnace loses water from boiling, the problem should be identified and repaired immediately. Under normal operation, little or no water needs to be added. Adding water to the furnace may cause corrosion if not immediately treated with 1650XL Inhibitor Plus to the proper pH and nitrite levels. In addition, the amount of dissolved solids in the system (due to adding additional water) can cause problems.

3. **Water is not circulating** - Check to make sure the pump is operating and water is circulating continuously through the supply and return lines to keep water temperature uniform in the outdoor furnace.
4. **Circulation valve(s) closed** - Be sure the proper valves in the system are open to allow circulation.
5. **Pulse set to run too long and/or too often in a low heat draw situation** - Increase the time between idle pulses of air and/or decrease the amount of time the pulse is provided (see FireStar operating instructions).
6. **FireStar combustion controller set incorrectly** - Refer to FireStar Combustion Controller Operation Manual.

F. FREQUENT PUMP TROUBLE OR POOR WATER CIRCULATION

1. **Pump mounted incorrectly** - If the pump is not mounted on the outdoor furnace, it must be mounted at a minimum of four feet lower than the top water level in the outdoor furnace.

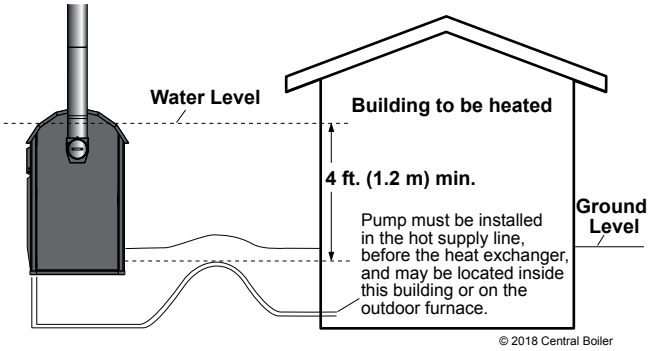

Make sure the pump motor is installed in a horizontal position. The junction box must not be located below the pump motor. If necessary, remove the four screws and rotate the pump body.

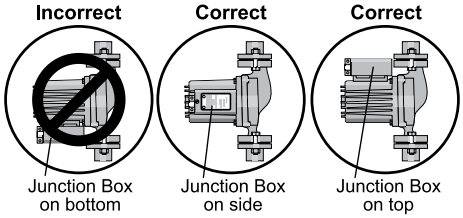

2. **Water will not circulate** - If the system has been drained and refilled, or if the system has been opened for any reason (e.g., replacement of pump, adding heat exchangers, repairing a leak), the system must be purged (see Initial Start-up Procedures).
3. **Poor water quality** - Water with high amounts of solids, sand or dirt can cause frequent pump failure. Use softened and/or filtered water.
4. **Deposits in water lines/heat exchanger walls** - If water high in silica or other mineral content has been used, material deposits may build up on the insides of the supply and return lines and on the heat exchanger walls. If this occurs, the system will need to be drained and then cleaned using Sludge Conditioner (p/n 166). The system must then be refilled with the proper amount of 1650XL Inhibitor Plus (p/n 1650) and fresh water.

G. BURNING AN EXCESSIVE AMOUNT OF WOOD

1. **High volume water heating** - High volume water heating (e.g., car wash, swimming pool, etc.) will require high wood consumption.
2. **Excessive heat loss** - See items 6-10 of Building is Losing Temperature.
3. **Supply and return line heat loss** - If not using ThermoPEX, supply and return lines buried in a wet, low-lying area may cause a large heat loss that will greatly increase wood consumption.
4. **High heat demand** - Concrete slabs (with radiant heat) that are poorly insulated or are exposed to water or cold outside temperatures will require increased wood consumption (see Hydronic Installations section). Bringing a cold concrete slab up to temperature the first time will take a considerable amount of time and wood; once warm, wood consumption will be reduced if the concrete slab and building are insulated properly. The following will also have a high heat demand: poorly insulated buildings, buildings with large amounts of glass windows/doors, buildings with overhead doors, greenhouses, uninsulated crawl spaces, outdoor air infiltration and air leaking through foundation.

H. VISIBLE EXHAUST COMING FROM CHIMNEY

Review the information in the Adding Wood section, starting at step 5.

There are conditions related to outside temperatures, humidity, fuel moisture, burn rate and other factors that can cause steam to be visible in the exhaust plume of combustion equipment, whether it is wood, gas or oil.

Seeing a white exhaust plume with moisture present is normal under many conditions and is not suggestive of poor combustion or high emissions.

Opacity is the amount of light which is blocked in an exhaust plume. It is a measurement that is usually stated as a percentage. For example, an opacity of 0% means that all light passes through while an opacity of 100% means that no light can pass through. Opacity measurements give an indication of the concentration of particles in an exhaust plume.

To read opacity correctly, observations should be made only when:

- The sun is shining and behind you,
- You are at least three times the distance of the chimney height away from the furnace, and
- The plume is traveling perpendicular to your position.

The observation should be conducted looking at the point of the plume where condensed water vapor (steam) is not present. Do not observe the plume itself but rather look through it at a contrasting background (such as green leaves or trees). There are many other important factors as well.

The amount of visible emissions can be reduced by burning seasoned wood, by making sure that your chimney meets the recommendations in this owner's manual and by loading the firebox to match your heat load. Once the water content of the wood has evaporated, the emissions become very transparent.

1. **Too much ash in firebox** - Refer to Routine Maintenance for ash removal.

I. CORROSION IS PRESENT - CALL DEALER

NOTE: To reduce condensation in the firebox, it is not recommended to set the temperature below 185˚F (85˚C).

1. **Burning garbage or plastic** -Do not burn garbage or plastic. It is likely unlawful and may damage the firebox in a very short period of time.

NOTE: Chloride or sulfurous gases can be generated if plastic or rubber is burned and will mix with the moisture from the wood to form hydrochloric or sulfuric acids in the firebox, creating corrosion.

2. **Firebox wasn't cleaned out at the end of the heating season** - Be sure to follow the post-heating season maintenance schedule which includes scraping out firebox and removing all ash.
3. **Cleaning rod not run through ash bed prior to loading wood** - It is important that you push the cleaning rod back and forth through the ash bed each time prior to loading wood to allow air flow and prevent the ashes from accumulating moisture. See Operating Instructions for more details.

GENERAL INFORMATION

Make note of these precautionary statements, also found on the outdoor furnace.

CAUTION

Temperature Sensor

Take care not to damage the temperature sensor when removing ash.

ATTENTION

Capteur de température

Prenez soin de ne pas endommager le capteur de température lorsque vous enlevez les cendres.

NOTICE

During a cold start, a considerable amount of moisture from condensation will collect inside the firebox and Reaction Chamber. This is normal and the moisture will evaporate when the outdoor furnace reaches operating temperature.

REMARQUE

Lors d'un démarrage à froid, une importante quantité d'humidité de condensation s'accumule à l'intérieur du foyer et de la chambre de réaction. Ce phénomène est normal et l'humidité s'évaporera lorsque la chaudière extérieure aura atteint sa température de service.

p/n 7000392

NOTICE

For use with aluminum or copper conductors.

REMARQUE

Pour utilisation avec des conducteurs en aluminum ou en cuivre.

p/n 7000247

CAUTION

Failure to perform proper care and maintenance will reduce the life and performance of your furnace. For best results, always follow these guidelines:

1. Add water treatment *before* filling with water.
2. Burn properly seasoned wood.
3. Do not burn anything other than the recommended fuels.
4. Clean and inspect the furnace regularly.
5. Do not operate with the water temperature below 150 F (66°C).
6. Maintain the recommended water treatment levels at all times.
7. Clean the firebox thoroughly and keep it dry when not in use.
8. See Owner's Manual for more information about regularly scheduled maintenance.

ATTENTION!

The Owner's Manual is located behind the airbox cover. Remove and read it before operating furnace. If you have any questions, contact your dealer.

NOTICE

Inspect and clean the heat exchangers monthly or as needed.
READ OWNER'S MANUAL FOR COMPLETE INSTRUCTIONS.

MAINTENANCE SCHEDULE

DAILY
Check water level. Remove ashes as needed.

MONTHLY
Check door seal, chimney and vent cap. Remove ashes and clean the firebox. Inspect and clean the heat exchanger and Reaction Chamber.

SEMANNUALLY
Completely remove ashes from the firebox. Inspect and scrape the firebox. Inspect and clean the heat exchanger and Reaction Chamber. This inspection should also be performed after the first and third months of operation. Use a wire brush and small scraper to clean firebox, side walls, back wall and ash pan.

READ OWNER'S MANUAL FOR COMPLETE INSTRUCTIONS.

p/n 7000394

CAUTION

- DO NOT start fire until water level is full.
- Keep face away from door area.
- Hot surfaces.
- Keep children away.
- DO NOT touch during operation.
- DO NOT burn treated wood, plastics or rubber in the furnace.
- Maximum draft marked on the nameplate.
- ALWAYS comply with all applicable codes and regulations.
- ALWAYS take care when adding wood to the furnace to prevent hot coals from spilling out.
- ALWAYS store ashes in a covered non-combustible container.

ATTENTION

- NE démarrez PAS le feu avant de faire le plein d'eau.
- Éloignez votre visage de la porte.
- Surfaces brûlantes.
- Éloignez les enfants.
- NE touchez PAS pendant l'utilisation.
- NE brûlez PAS de bois traité, de plastique ou de caoutchouc dans la chaudière.
- Le tirage maximal est indiqué sur la plaque signalétique.
- Respectez TOUJOURS l'ensemble des législations et réglementations applicables.
- Procédez TOUJOURS avec précaution lorsque vous ajoutez du bois dans la chaudière pour éviter de faire tomber des braises à l'extérieur.
- Stockez TOUJOURS les cendres dans un récipient non combustible et couvert.

p/n 7000233

DO NOT BURN GARBAGE

Burning garbage causes damage to components of wood burning appliances.

HPBA

Refer to your Owner's Manual.

BURN RESPONSIBLY

Preserve Your Right to Burn Wood

- Before installing, ALWAYS consider the direction that the chimney exhaust will travel with prevailing winds.
- BEFORE operating, the furnace must be installed with adequate chimney height. If there is a residence not served by the furnace within 300 feet (91.5 meters), the chimney must be 2 feet (0.6 meters) higher than the peak of the residence it serves. If there is a residence not served by the furnace within 100 feet (30.5 meters), the chimney must be 2 feet (0.6 meters) higher than the peak of the residence served or not served, whichever is higher. Proper chimney height will aid in dispersing the chimney exhaust. Chimney height may need to be greater than the above minimum requirements. The outdoor wood furnace must be installed in accordance with the manufacturer's recommendations and/or in accordance to all applicable codes and regulations, whichever is more stringent. Refer to your Owner's Manual.
- ONLY burn the proper fuels specified.
- DO NOT create a nuisance. Be certain your chimney exhaust is not adversely affecting neighbors. Creating a nuisance may affect your right to burn wood. If any issue with chimney exhaust arises, take immediate action to solve the issue.
- Properly dispose of ashes into a metal container with a cover.
- Wood burning can be more of an art than a science. The operator may need to vary technique to achieve satisfying results as installations, heat loads and fuel vary. Over time, you will become familiar with your particular installation and you will be able to identify cause and effect in a variety of circumstances.

Protect your right to heat with wood. Careless operation may result in a loss of your rights.

p/n 7000091

DANGER

- Risk of fire or explosion.

DANGER

- Risque d'incendie ou d'explosion.

WARNING

- Risk of fire.
- DO NOT operate with flue draft exceeding -0.050 in. water column (-12.450 Pa).
- DO NOT use chemicals to start unit firing.
- DO NOT burn garbage, gasoline, fuel oils, or other flammable liquids or materials.
- DO NOT operate with fuel-loading or ash-removal doors open.
- DO NOT store fuel or other combustible materials within marked installation clearances.
- Inspect and clean flues and chimney regularly.
- For safety, open bypass door 15 seconds before opening the firebox door and do not operate the furnace with the firebox door unlatched.
- Operating the furnace with the firebox door unlatched may lead to a runaway fire. In the event of a runaway fire or immediately after tending to the fire, latch the firebox door and wait 15 seconds before closing the bypass door to purge the firebox.
- DO NOT leave furnace unattended with the firebox door unlatched.
- DO NOT install or operate furnace before first reading and understanding the Owner's Manual.
- DO NOT allow others to install or operate furnace without first reading and understanding the Owner's Manual.

AVERTISSEMENT

- Risque d'incendie.
- N'UTILISEZ PAS l'appareil si le tirage dépasse de -0,050 pouce la colonne d'eau (-12,450 Pa).
- N'utilisez PAS de produits chimiques pour allumer la machine.
- Ne brûlez PAS de déchets, d'essence, l'huile de vidange ni d'autres liquides ou matériaux inflammables.
- NE faites PAS fonctionner la chaudière avec la porte de chargement du combustible ou celle d'enlèvement des cendres ouverte.
- NE stockez PAS de carburant ou autres matériaux combustibles à l'intérieur du périmètre de sécurité indiqué.
- Inspectez et nettoyez périodiquement les carneaux et la cheminée.
- Pour des raisons de sécurité, ouvrez la porte de dérivation quinze secondes avant d'ouvrir la porte du foyer. Ne faites pas fonctionner la chaudière avec la porte du foyer déverrouillée.
- Si la chaudière fonctionne avec la porte du foyer déverrouillée, un feu de cheminée risque de se déclarer. Si un feu de cheminée survient ou immédiatement après avoir éteint le feu, verrouillez la porte du foyer et attendez quinze secondes avant de fermer la porte de dérivation pour purger le foyer.
- Ne laissez PAS la chaudière sans surveillance lorsque la porte du foyer est déverrouillée.
- N'installez PAS et N'utilisez PAS la chaudière avant de lire et de comprendre le manuel du propriétaire.
- N'autorisez PAS d'autres personnes à installer et utiliser la chaudière avant de lire et de comprendre le manuel du propriétaire.

p/n 7000232

CAUTION

15 seconds before opening firebox door, lift and push handle toward back of furnace to open bypass door.

15 seconds after closing firebox door, pull handle toward front of furnace and push down to close bypass door.

ATTENTION

Quinze secondes avant d'ouvrir la porte du foyer, ouvrez la porte de dérivation en soulevant puis poussant la poignée en direction de l'arrière de la chaudière.

Quinze secondes après avoir fermé la porte du foyer, fermez la porte de dérivation en tirant la poignée en direction de l'avant de la chaudière puis en la poussant vers le bas.

p/n 7000273

NOTICE

Initially inspect the heat exchangers weekly, and clean as needed, until you can determine the frequency of cleaning based on your application.

Refer to the Owner's Manual for cleaning procedures.

p/n 7000676

Furnace Power Disconnect
Coupure électrique de la chaudière.

NOTICE

To reset the circuit breaker, turn the switch OFF and then ON.

p/n 7000348

AVIS

Pour réarmer le disjoncteur, amenez l'interrupteur sur ARRÊT puis sur MARCHE.

p/n 7000230

NOTICE

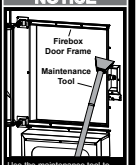

Use the maintenance tool to completely scrape the face of the firebox door frame where the door seal contacts.

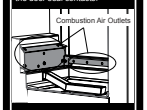

Keep the combustion air outlets and exhaust pathway open and clear of ash to allow the furnace to operate properly.

WARNING

AVOID DAMAGE!
BEFORE operating this appliance read manual and watch videos for proper operation and maintenance procedures.

Damage or decreased life expectancy of appliance could result if appliance is not properly operated or maintained.

p/n 7000555

WARNING

Risk of fire. Do not store fuel or other combustible materials within marked clearances to combustibles. Do not cover supply and return lines with combustible materials.

AVERTISSEMENT

Risque d'incendie. Ne stockez pas de carburant ou autres matériaux combustibles à l'intérieur du périmètre de sécurité indiqué. Ne recouvrez pas les conduites d'alimentation et de retour avec des matériaux combustibles.

p/n 7000243

CAUTION

DO NOT disable the door switch, as it serves as a safety and reset function.

ATTENTION

NE désactivez PAS l'interrupteur de porte car il sert de fonction de sécurité et de réinitialisation.

p/n 7000494

NOTICE

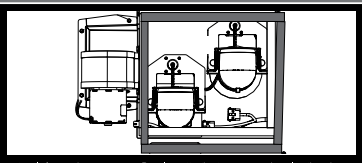

Inspect seals for any damage or gaps. Pay close attention to corners and any location where one seal meets another, as a good seal is crucial for proper furnace operation. Refer to the Owner's Manual for instructions on how to replace a defective seal.

*Airbox illustration for reference only. Actual setup and component location may differ from your specific model. Refer to your Owner's Manual for more details.

© 2017 Central Boiler

CAUTION

ANY TIME WATER IS ADDED, the furnace MUST BE immediately heated to 185°F, circulated, and the inhibitor level tested. FAILURE TO DO SO WILL RESULT IN DAMAGE to your furnace's water jacket!

Carefully follow the steps in your Owner's Manual for adding water and testing inhibitor levels.

The Owner Resources page at CentralBoiler.com allows you to access the Owner's Manual and view videos and other resources specific to your furnace.

CentralBoiler.com
Explore > Owner Resources

p/n 7000682

NOTICE

Chimney pipe and all extensions must be insulated.

REMARQUE

Coupez l'alimentation électrique avant d'enlever ce panneau.

CAUTION

HOT Surfaces

Do NOT Touch During Operation

ATTENTION

Surfaces BRÛLANTES

NE touchez PAS pendant le fonctionnement

p/n 7000240

WARNING

Risk of fire. Do not open the Reaction Chamber door when appliance is in operation. Do not leave Reaction Chamber door open unattended.

AVERTISSEMENT

Risque d'incendie. N'ouvrez pas la porte de la chambre de réaction lorsque l'appareil est en marche. Ne laissez pas la porte de la chambre de réaction ouverte sans surveillance.

p/n 7000391

CAUTION

Do not plug, block or seal vent opening. Sealing can result in a dangerous buildup of pressure.

ATTENTION

Ne pas bloquer, obturer ou sceller l'ouverture du conduit d'évacuation. Sceller l'ouverture pourrait entraîner une augmentation dangereuse de la pression.

p/n 7000525

WARNING

Turn off Furnace Power Disconnect before opening this panel. Furnace Power Disconnect located on side of furnace under the pump panel. Do not operate furnace with this panel removed.

AVERTISSEMENT

Avant d'ouvrir ce panneau, arrêtez le commutateur de coupure électrique de la chaudière. Ce commutateur est situé sur le côté de la chaudière sous le panneau de la pompe. Ne pas faire fonctionner la chaudière à bois extérieur avec ce panneau retiré.

p/n 7000441

CAUTION

Watch your head.

p/n 8956

WIRING DIAGRAM

MAIN HARNESS CONNECTOR 1			
TERMINAL	WIRE COLOR & SIZE		DESTINATION
3	VIO	18GA	Auxiliary Temp 1
4	ORG	18GA	Auxiliary Temp 2
5	BRN	18GA	Water Temperature
8	PNK	18GA	Door Switch
9	RED	T/C	Reaction Temp -
10	YEL	T/C	Reaction Temp +
13	GRY	18GA	Bypass Alarm Switch
14	BLU/BLK	18GA	Water Level Switch

MAIN HARNESS CONNECTOR 2			
TERMINAL	WIRE COLOR & SIZE		DESTINATION
1	BLK/WHT	18GA	Primary Air Actuator
2	RED/WHT	18GA	Primary Air Actuator
3	BLU/WHT	18GA	Primary Air Actuator
4	GRN	18GA	Secondary Air Actuator
5	RED	18GA	Secondary Air Actuator
6	BLU	18GA	Secondary Air Actuator
8	BLK	16GA	120 VAC
9	GRN/WHT	18GA	Primary Air Actuator
11	YEL/BLK	18GA	+24VDC
12	GRN/BLK	18GA	DC Ground
13	BLK	18GA	Secondary Air Actuator
14	RED	18GA	+5VDC
15	GRN/YEL	16GA	Earth Ground
16	VIO	16GA	Combustion Fan

CONTROL PANEL 12 PIN CONNECTOR			
TERMINAL	WIRE COLOR & SIZE		DESTINATION
1	BLK	16GA	120 VAC
2	GRN/YEL	16GA	Earth Ground
3	WHT	16GA	120 VAC Neutral
4	BLK	18GA	Secondary Air Actuator
5	GRN	18GA	Secondary Air Actuator
6	RED	18GA	Secondary Air Actuator
7	VIO	16GA	Combustion Fan
8	BLU/WHT	18GA	Primary Air Actuator
9	GRN/WHT	18GA	Primary Air Actuator
10	BLK/WHT	18GA	Primary Air Actuator
11	RED/WHT	18GA	Primary Air Actuator
12	BLU	18GA	Secondary Air Actuator

AIR BOX 12 PIN CONNECTOR			
TERMINAL	WIRE COLOR & SIZE		DESTINATION
1	VIO	16GA	Combustion Fan
2	GRN/YEL	16GA	Earth Ground
3	WHT	16GA	120 VAC Neutral
4	BLK/WHT	18GA	Primary Air Actuator
5	GRN/WHT	18GA	Primary Air Actuator
6	RED/WHT	18GA	Primary Air Actuator
8	BLU	18GA	Secondary Air Actuator
9	GRN	18GA	Secondary Air Actuator
10	BLK	18GA	Secondary Air Actuator
11	RED	18GA	Secondary Air Actuator
12	BLU/WHT	18GA	Primary Air Actuator

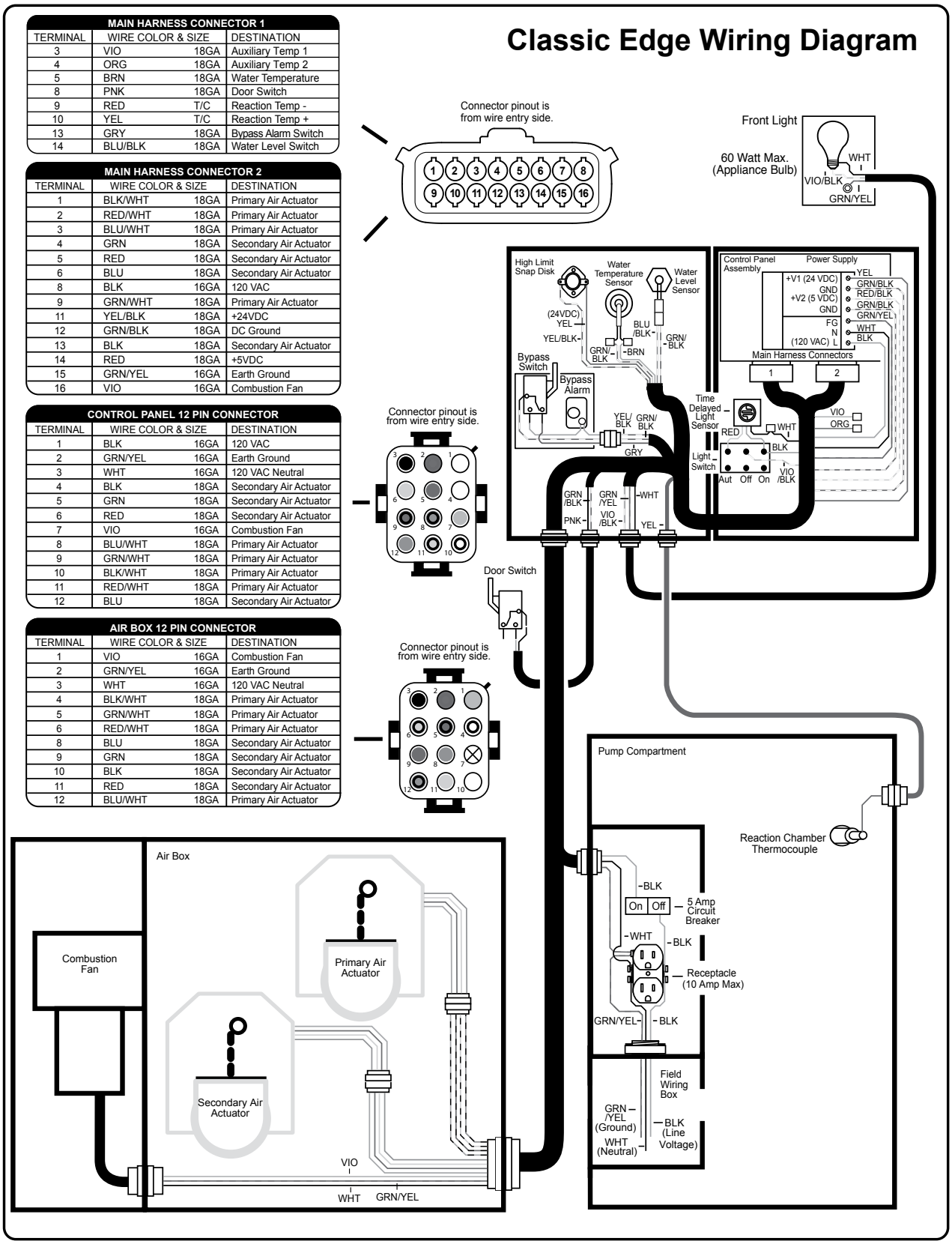

© 2017 Central Boiler p/n 7000828

WATER SAMPLE INFORMATION - TITANIUM SERIES MODELS

NOTE: It is your responsibility as owner to ensure that your water sample information is accurate and that you submit your samples on a timely basis as required by the warranty for your stainless steel outdoor furnace. Failure to do so will result in a one year warranty.

WATER SAMPLE LABEL INFORMATION

Use the Water Sample Kit provided in your owner's packet or include the water sample label information below when mailing water samples to Central Boiler.

NAME: _____

ADDRESS: _____

CITY: _____ STATE: _____ ZIP: _____

EMAIL: _____

PHONE: _____ FURNACE SERIAL # _____

DEALER: _____

DATE SAMPLE COLLECTED: _____

☐ NO ANTIFREEZE ADDED ☐ ANTIFREEZE ADDED

Please check ONE box

FOR LAB USE ONLY:

Moly pH Ni Date

MAILING LABEL

Use the Water Sample Kit provided in your owner's packet or send water samples to Central Boiler, Attn: Water Quality Department, 20502 160th Street, Greenbush, MN 56726.

FROM _____

_____

_____

CENTRAL BOILER, INC.
ATTN: WATER QUALITY DEPARTMENT
20502 160th Street
Greenbush, MN 56726

LIMITED WARRANTY - CLASSIC EDGE TITANIUM SERIES MODELS

Central Boiler, Inc. ("Central Boiler") warrants to the original owner, except (a) parts manufactured by others and excluded from warranty coverage below; and (b) parts or items specified below as covered by a limited one year warranty, Central Boiler Classic, Classic Edge and E-Classic Titanium Series furnaces against defects in workmanship and against corrosion failure of the firebox/water jacket assembly for a period of TWENTY-FIVE (25) YEARS from the date of original retail purchase, provided that the Limited Warranty Registration Form is completed and sent to Central Boiler within ten (10) days of the original owner taking possession of the furnace and the original owner strictly complies with the instructions for maintenance and water treatment contained in the Owner's Manual; otherwise this Limited Warranty shall be for a period of ONE (1) YEAR from the date of manufacture or one year from original retail purchase, if proof of purchase date can be provided.

If a failure of a warranty covered part occurs that is caused by a defect in workmanship or corrosion, at its option Central Boiler will (1) repair or replace (using new or refurbished replacement parts) the defective or failed part based on the date of original retail purchase at the following prorated scale:

First – Fifth year: Parts and labor will be covered at 100%
Sixth year: Parts will be covered at 70%
Seventh year: Parts will be covered at 60%
Eighth year: Parts will be covered at 50%
Ninth year: Parts will be covered at 40%
Tenth – Twentieth year: Parts will be covered at 15%
Twenty-first – Twenty-fifth: Parts will be covered at 10%

(2) exchange the furnace with a comparable model furnace that is new or which has been manufactured from new or serviceable used parts and is at least functionally equivalent to the original furnace, or (3) provide a discount off the retail purchase price of a new Central Boiler furnace of comparable model based on the pro-rated scale: Years 1-5 100%, years 6-7 at 50%, years 8-10 at 40%, years 11-15 at 30% and years 16-25 at 10%. A replacement furnace/part assumes the remaining warranty of the original furnace/part or ninety (90) days from the date of replacement or repair, whichever provides longer coverage. If a furnace or part is qualified for replacement under the provisions of this limited warranty, at Central Boiler's discretion, the furnace or part may be required to be returned to Central Boiler for inspection and recycling or disposal.

Because maintaining the corrosion inhibitor at a proper level is imperative to preventing corrosion failures, to qualify for the 25 year warranty the operator must comply with the instructions in the owner's manual for maintenance and water treatment and send a furnace water sample when the furnace is initially put into service and once each year thereafter to confirm proper maintenance and water treatment. No warranty claim can be approved unless the furnace registration and the required water test verifications are on file at Central Boiler.

Parts Manufactured By Others. Parts that are factory-installed by Central Boiler, but are manufactured by others, may be covered by their own manufacturer's warranty and are not covered by this limited warranty, except the FireStar™ combustion controller on the Classic, Classic Edge and E-Classic Titanium Series furnace is warranted against defects in workmanship for a period of two (2) years from the date of original retail purchase, provided that the Limited Warranty Registration Form is completed and sent to Central Boiler within ten (10) days of the original owner taking possession of the furnace; otherwise this limited warranty shall be for a period of ONE (1) YEAR from the date of original retail purchase. This limited warranty covers the controller part only; service calls, mileage, and labor to diagnose the problem and install a new part are not covered.

Parts Covered by a Limited One Year Warranty. The following parts are covered by a limited warranty for workmanship defects for one year: gaskets, seals, heat shields, paint, charge tube, firebox ash pan, combustors, aquastats, actuators, heat refractory, and firebrick. This limited warranty covers the part only; service calls, mileage, and labor to diagnose the problem and install a new part are not covered.

EXCLUSIONS AND LIMITATIONS - This Limited Warranty applies only to Central Boiler Classic, Classic Edge and E-Classic Titanium Series outdoor furnaces. This limited warranty covers only those defects or corrosion failures that arise as a result of normal use of the outdoor furnace and does not cover any other defects or problems, including those that arise as a result of: (a) improper maintenance (b) operation outside the furnace's specifications (see owner's manual), accident, abuse, misuse, misapplication, or parts that are not factory-installed; (c) service performed by anyone other than Central Boiler unless authorized by Central Boiler in writing; (d) modifications undertaken without the written permission of Central Boiler; or (e) if any Central Boiler serial number has been removed or defaced. This limited corrosion warranty will be void if the owner fails to maintain the proper amount of corrosion inhibitor in the system, fails to send water samples to Central Boiler as required, or burns materials in the firebox other than natural wood. This limited warranty excludes the cost of shipping, labor to remove or reinstall the furnace, plumbing labor and/or parts and the cost of alternative heat if the furnace is out of service for repairs. Warranty excludes replacement of water, inhibitors or other additives, and parts used in the system whether or not mounted on the furnace, such as pumps, valves, and piping.

Central Boiler is not liable for damage or repairs required as a consequence of faulty installations or applications by others or any event of force majeure. Central Boiler is not liable for incidents or accidents which can be prevented by the owner or that occur from the operation of the outdoor furnace. A backup heating system should be in place to prevent damage in case of failure to refuel the outdoor furnace or in the event that mechanical failure of the outdoor furnace or system occurs. Heat replacement representations found in Central Boiler promotional information should be used only as a guideline. Heat loss for all applications with all weather extremes and other heat variables must be considered when sizing an outdoor furnace for different applications.

THIS LIMITED WARRANTY AND REMEDIES SET FORTH ABOVE ARE EXCLUSIVE AND IN LIEU OF ALL OTHER WARRANTIES, REMEDIES AND CONDITIONS, WHETHER ORAL OR WRITTEN, EXPRESS OR IMPLIED. CENTRAL BOILER SPECIFICALLY DISCLAIMS ANY AND ALL IMPLIED WARRANTIES, INCLUDING, WITHOUT LIMITATION, WARRANTIES OF MERCHANTABILITY AND FITNESS FOR A PARTICULAR PURPOSE. IF CENTRAL BOILER CANNOT LAWFULLY DISCLAIM IMPLIED WARRANTIES UNDER THIS LIMITED WARRANTY, ALL SUCH WARRANTIES, INCLUDING WARRANTIES OF MERCHANTABILITY AND FITNESS FOR A PARTICULAR PURPOSE ARE LIMITED IN DURATION TO THE DURATION OF THIS WARRANTY. No Central Boiler dealer or employee is authorized to make any modification, extension, or addition to this limited warranty. CENTRAL BOILER IS NOT RESPONSIBLE FOR DIRECT, SPECIAL, INCIDENTAL OR CONSEQUENTIAL DAMAGES RESULTING FROM ANY BREACH OF WARRANTY OR CONDITION, OR UNDER ANY OTHER LEGAL THEORY. Some states and provinces do not allow the exclusion or limitation of incidental or consequential damages or exclusions or limitations on the duration of implied warranties or conditions, so the above limitations or exclusions may not apply to you. This warranty gives you specific legal rights, and you may also have other rights that vary by state or province.

OBTAINING WARRANTY SERVICE - To obtain warranty service, contact the Central Boiler dealer from whom you purchased your furnace or contact Central Boiler by telephone (800-248-4681) or mail (20502 160th Street, Greenbush, MN 56726). Please provide the dealer's name, original date of sale, model number and serial number in all communications. Central Boiler reserves the right to require the warranty service to be performed at a Central Boiler facility when deemed necessary by Central Boiler. All corrosion repairs will be performed at Central Boiler unless authorized by Central Boiler in writing.

Design Changes. Central Boiler reserves the right to change and improve the product design for improved performance without assuming responsibility to upgrade previously sold products.

©2019 Central Boiler

Section 4

Test Data by Run

Hydronic Heating Appliances - Test Method ASTM 2618
Conditioning

Manufacturer: Central Boiler
Model: Edge 760
Tracking No.: 2383
Project No.: 0117WB000E
Test Date: July 2019
Technician: Central Boiler
Operation Category: CAT I - CAT II

Stove Weight (lb): 2185.5
Water Weight (lb): 2689

Elapsed Time (hr)	Flue Gas Temp (degrees F)
0	137.0
1	191.0
2	197.0
3	144.0
4	284.0
5	135.0
6	287.0
7	216.0
8	137.0
9	268.0
10	136.0
11	269.0
12	138.0
13	260.0
14	140.0
15	244.0
16	141.0
17	226.0
18	144.0
19	188.0
20	148.0
21	122.0
22	151.0
23	123.0
24	149.0
25	188.0
26	146.0
27	247.0
28	136.0
29	159.0
30	276.0
31	146.0
32	291.0
33	141.0
34	296.0
35	142.0
36	130.0
37	275.0
38	144.0
39	133.0
40	140.0
41	160.0
42	133.0
43	125.0
44	183.0
45	145.0
46	135.0
47	293.0
48	140.0
49	129.0
50	289.0

Run 1

Hydronic Heating Appliances - Test Method ASTM 2618
Results

Manufacturer:	Central Boiler
Model:	Edge 760
Tracking No.:	2383
Project No.:	0117WB000E
Run:	1
Test Date:	August 7, 2019

Burn Rate	**14.48**	**kg/hr dry**
Average Tunnel Temperature	117	degrees F
Average Gas Velocity in Dilution Tunnel - vs	8.4	feet/second
Average Gas Flow Rate in Dilution Tunnel - Qsd	21401	dscf/hour
Average Delta p	0.016	inches H20
Average Delta H	1.29	inches H20
Total Time of Test	419	minutes

PARTICULATE EMISSIONS RESULTS

First Hour:	**6.24**	g/hr
	0.37	g/kg
	0.06	lb/mmBTU output
Complete Run:	**8.55**	g/hr
	0.59	g/kg
	0.08	lb/mmBTU output

	SAMPLE TRAIN 1		SAMPLE TRAIN 2		AMBIENT SAMPLE TRAIN	
Total Sample Volume - Vm	65.68	cubic feet	66.91	cubic feet	62.50	cubic feet
Average Gas Meter Temperature	91	degrees F	90	degrees F	78	degrees F
Total Sample Volume (Standard Conditions) - Vmstd	63.9	dscf	63.9	dscf	61.6	dscf
Total Particulates - mn	25.9	mg	26	mg	0.4	mg
Particulate Concentration (dry-standard)	0.00041	grams/dscf	0.00041	grams/dscf	0.000006	grams/dscf
Particulate Emissions	59.62	grams	59.83	grams		
Difference from Average	0.11	grams	0.11	grams		

Results Are Acceptable

	AVERAGE	
Total Sample Volume - Vm	66.29	cubic feet
Average Gas Meter Temperature	90	degrees F
Total Sample Volume (Standard Conditions) - Vmstd	63.9	dscf
Particulate Concentration (dry-standard)	0.00040	grams/dscf
Particulate Emissions	59.73	grams
7.5% of the average particulate emissions	4.48	grams

ADDITIONAL ACCEPTANCE CRITERIA

Boiler Water Return Temperature >120 °F	**Acceptable**
Proportional Rate Variation >80%	**Not Acceptable**
90% of PR Values between 90-110%	**Acceptable**

SAMPLE TRAIN 1 - FIRST HOUR

Total Sample Volume - Vm	9.56	cubic feet
Average Gas Meter Temperature	86	degrees F
Total Sample Volume (Standard Conditions) - Vmstd	9.39	dscf
Total Particulates - mn	2.8	mg
Particulate Concentration (dry-standard)	0.00030	grams/dscf
Particulate Emissions	6.24	grams
Burn Rate	16.68	(dry kg/hr)
Heat Output Rate	236088	BTU/hr

Hydronic Heating Appliances - Test Method ASTM 2618
Results

Manufacturer:	Central Boiler	Equipment Numbers:	
Model:	Edge 760		
Tracking No.:	2383		
Project No.:	0117WB000E		
Run #:	1		
Date:	8/7/19		

TRAIN 1 (First Hour emissions)

Sample Component	Reagent	Filter, Probe or Dish #	Weights		
			Final, mg	Tare, mg	Particulate, mg
B. Front filter catch	Filter	D854	124.1	121.3	2.8
C. Rear filter catch	Filter				0.0
D. Probe catch*	Probe				0.0
E. Filter seals catch*	Seals				0.0

Sub-Total	Total Particulate, mg:	2.8

TRAIN 1

Sample Component	Reagent	Filter, Probe or Dish #	Weights		
			Final, mg	Tare, mg	Particulate, mg
A. Front filter catch (remainder)	Filter	D855	130.0	121.3	8.7
B. Rear filter catch	Filter	D856,860,861	369.7	357.1	12.6
C. Probe catch*	Probe	OES 4	114148.2	114146.4	1.8
D. Filter seals catch*	Seals	R840	3357.4	3357.4	0.0

Sub-Total	Total Particulate, mg:	23.1
	Total Particulate, mg:	25.9

TRAIN 2

Sample Component	Reagent	Filter, Probe or Dish #	Weights		
			Final, mg	Tare, mg	Particulate, mg
A. Front filter catch	Filter	D857	126.6	117.2	9.4
B. Rear filter catch	Filter	D858,862,863	369.2	354.3	14.9
C. Probe catch*	Probe	12	114285.0	114283.6	1.4
D. Filter seals catch*	Seals	R841	4277.7	4277.4	0.3

Total Particulate, mg:	26.0

AMBIENT

Sample Component	Reagent	Filter # or Probe #	Weights		
			Final, mg	Tare, mg	Particulate, mg
A. Front filter catch*	Filter	D859	117.8	117.4	0.4

Total Particulate, mg:	0.4

*Any particulate catch that results in a negative number, is assumed to be zero

Component	Equations:
A. Front filter catch	Final (mg) - Tare (mg) = Particulate, mg
B. Rear filter catch	Final (mg) - Tare (mg) = Particulate, mg
C. Probe catch	Final (mg) - Tare (mg) = Particulate, mg

Hydronic Heating Appliances - Test Method ASTM 2618
Fuel Moisture

Manufacturer:	Central Boiler
Model:	Edge 760
Tracking No.:	2383
Project No.:	0117WB000E
Technician:	Central Boiler
Run #:	1
Test Date:	August 7, 2019

Wet Weight (lb)	% Moisture				
9.3	19.2	18.6	19.8	20.2	19.6
12.7	20.9	18.1	22	20.9	18.4
12.3	20.2	19.4	20	18.2	19.5
12.1	19.8	18.3	20.3	19.2	23.8
11.5	22.3	20.3	23.8	25.7	24.5
9.1	22.4	22.7	25.8	19.7	18.3
12.1	22.4	18.1	18.9	20.3	25.2
12.9	18.2	18.7	19.2	19.4	20.1
13	19.9	19.4	18.6	18.3	20.3
13.5	20.3	19.5	19.3	22.2	18
11.7	19.5	19.8	23.8	20.8	18.4
11.9	19.1	19.1	18.7	18.2	21.7
13.2	21.5	25.4	24.4	20.1	19.1
10.6	19.1	18.8	20	18.1	19.1
11.4	24.2	26.9	24.4	27.7	19
12.5	18.8	20.8	22.1	19.0	19.7
13.1	20.1	18.9	21.7	21.0	20.3
10.4	19.9	19.2	18.1	19.7	19.9
12.9	21.4	24.9	26.7	25.9	24.7
11.4	21.7	21.6	23.1	21.4	24.8
11	19.5	19.7	19.8	19.5	19.3
9.2	18.4	18.7	19.2	19.7	19.0
11.7	26.7	27.8	25.6	24.9	23.8

Total Weight of Load (lb): 269.5

Total Moisture of Load (%): 20.9

Equipment Numbers:

Hydronic Heating Appliances - Test Method ASTM 2618
Test Data

Run: 1

Manufacturer: Central Boiler
Model: Edge 760
Tracking No.: 2383
Project No.: 0117WB000E
Test Date: August 7, 2019
Technician: B. Davis
Beginning Clock Time: 19:34
Recording Interval: 1 min.
Total Sampling Time: 419 min.

Velocity Traverse Data

	Pt.1	Pt.2	Pt.3	Pt.4	Pt.5	Pt.6	Pt.7	Pt.8	Pt.9	Pt.10	Pt.11	Pt.12	Center	
Initial dP	0.015	0.016	0.015	0.016	0.017	0.017	0.016	0.015	0.017	0.016	0.015	0.015	0.017	"H2O
Initial Temp.	118	118	118	118	118	118	118	118	118	118	118	118	118	oF

Air Velocity: Initial: <50 Final: <50 V_{strav} 8.71 ft/sec
Scale Audit: Pre: 10.0 Post: 10.0 Induced Draft: 0 V_{scent} 9.03 ft/sec
Pitot Tube Leak Test: Pre: 0 Post: 0 % Smoke Capture: 100 F_p 0.965
Flue Pipe Cleaned Prior to First Test in Series: Date:

PM Control Module: 335, 336
Dilution Tunnel MW(dry): 29.00 lb/lb-mole
Dilution Tunnel MW(wet): 28.78 lb/lb-mole
Dilution Tunnel H2O: 2.00 percent
Dilution Tunnel Static: -0.171 "H2O
Pitot Tube Cp: 0.99

	(1)	(2)	(amb)
Meter Box Y Factor:	1.009	0.99	1.001

Barometric Pressure:	Begin	Middle	End	Average
	30.02	29.98	29.97	29.99 "Hg

Tunnel Velocity: 8.43 ft/sec.
Intial Tunnel Flow: 355.6 scfm
Average Tunnel Flow: 356.7 scfm
Tunnel Area: 0.785 ft2
Post-Test Leak Check (1): 0.000 cfm @ 10 in. Hg
Post-Test Leak Check (2): 0.000 cfm @ 8 in. Hg
Fuel Moisture (dry basis %): 20.9
Total Particulate (1): 25.9
Total Particulate (2): 26.0

Elapsed Time	Gas Meter Cubic Feet (1)	Gas Meter Cubic Feet (2)	Gas Meter Cubic Feet (amb)	Sample Rate, cfm (1)	Sample Rate, cfm (2)	Orifice dH (1)	Orifice dH (2)	Orifice dH (amb)	Meter oF (1)	Meter oF (2)	Meter oF (amb)	Meter Vac. In. Hg. (1)	Meter Vac. In. Hg. (2)	Dilution Tunnel Temp.	Dilution Tunnel dP	Pro. Rate (%) (1)	Pro. Rate (%) (2)	Fuel Weight, lb: Scale Reading	Fuel Weight, lb: Weight Change	Flow, gpm: Load Side Liquid Flow Rate	Flow, gpm: Boiler Side Liquid Flow Rate (optional)	Temperature Data, oF: Thermopile ΔT	Boiler to Heat Exch. Temp.	Heat Exch to Boiler Temp.	Inlet Load Temp.	Outlet Load Temp.	Stack	Filter (1)	Filter (2)	Ambient		Specific Heat of Inlet Water (BTU/lb-°F)	Mass Flow Rate of Inlet Water (lb/min)	Heat Output, Btu
0	0.000	0.000	0.000			1.11	0.98	0.32	83	82	77	1.93	1.40	115	0.017			269.5		4.56	15.3	106.7	176.5	146.1	66.2	172.9	260	78	78	77				
1	0.145	0.149		0.15	0.15	1.34	1.09	0.32	83	82	77	1.97	1.50	106	0.016	93	94	269.0	0.50	4.60	15.4	106.6	176.4	146.0	66.2	172.8	240	79	79	77		1.001	38.303	4088
2	0.306	0.312		0.16	0.16	1.34	1.10	0.32	83	82	77	1.96	1.50	100	0.014	109	109	268.0	1.00	4.60	15.4	106.2	176.0	145.8	66.2	172.4	227	79	79	77		1.001	38.303	4072
3	0.466	0.475		0.16	0.16	1.33	1.08	0.32	83	82	77	1.98	1.50	103	0.017	99	99	267.5	0.50	4.58	15.4	105.6	175.4	145.4	66.2	171.9	249	80	80	77		1.001	38.138	4034
4	0.626	0.637		0.16	0.16	1.33	1.08	0.32	83	82	77	2.00	1.50	114	0.016	103	102	266.5	1.00	4.48	15.4	105.1	174.8	144.9	66.2	171.3	260	82	83	77		1.001	37.325	3927
5	0.785	0.800		0.16	0.16	1.34	1.08	0.32	83	82	77	2.00	1.50	116	0.016	103	103	266.0	0.50	4.52	15.2	104.8	174.5	144.7	66.2	171.0	265	83	83	77		1.001	37.652	3950
6	0.945	0.961		0.16	0.16	1.33	1.07	0.32	83	82	77	1.99	1.50	117	0.017	100	99	265.0	1.00	4.60	15.4	104.6	174.3	144.6	66.2	170.8	268	84	84	77		1.001	38.302	4010
7	1.104	1.122		0.16	0.16	1.32	1.08	0.32	83	82	77	2.00	1.50	118	0.016	103	102	264.0	1.00	4.70	15.3	104.3	174.0	144.3	66.2	170.5	270	85	85	77		1.001	39.109	4083
8	1.262	1.283		0.16	0.16	1.31	1.07	0.32	83	82	77	1.98	1.50	119	0.016	102	102	263.5	0.50	4.64	15.3	104.2	173.9	144.3	66.2	170.4	271	85	85	77		1.001	38.630	4029
9	1.420	1.445		0.16	0.16	1.32	1.06	0.32	83	82	77	1.99	1.50	119	0.016	102	103	262.5	1.00	4.66	15.3	104.0	173.8	144.2	66.2	170.3	271	86	86	77		1.001	38.769	4038
10	1.578	1.605		0.16	0.16	1.31	1.06	0.32	83	83	77	1.99	1.50	119	0.017	99	98	262.0	0.50	4.62	15.3	103.9	173.6	144.2	66.2	170.1	272	86	86	77		1.001	38.442	4000
11	1.736	1.764		0.16	0.16	1.32	1.06	0.32	83	83	77	2.00	1.50	119	0.014	109	108	261.0	1.00	4.60	15.3	103.8	173.5	144.0	66.2	170.0	273	87	87	77		1.001	38.256	3976
12	1.894	1.925		0.16	0.16	1.32	1.05	0.32	83	83	77	2.01	1.50	119	0.014	109	109	260.0	1.00	4.54	15.3	103.9	173.6	144.1	66.2	170.1	273	87	87	77		1.001	37.805	3931
13	2.053	2.084		0.16	0.16	1.31	1.04	0.32	84	83	77	2.00	1.50	119	0.018	97	95	259.0	1.00	4.65	15.3	104.0	173.7	144.2	66.2	170.2	273	87	87	77		1.001	38.735	4031
14	2.210	2.243		0.16	0.16	1.30	1.04	0.32	84	83	77	2.02	1.50	119	0.016	101	101	258.5	0.50	4.64	15.3	104.0	173.8	144.1	66.2	170.2	273	88	87	77		1.001	38.629	4023
15	2.368	2.403		0.16	0.16	1.30	1.04	0.32	84	83	77	2.01	1.50	119	0.016	102	101	257.5	1.00	4.59	15.3	104.1	173.8	144.2	66.2	170.3	274	88	88	77		1.001	38.175	3979
16	2.526	2.561		0.16	0.16	1.30	1.04	0.32	84	83	77	2.02	1.60	120	0.015	105	104	257.0	0.50	4.54	15.3	104.1	173.8	144.3	66.2	170.3	274	88	88	77		1.001	37.819	3942
17	2.683	2.720		0.16	0.16	1.30	1.04	0.32	84	83	77	2.01	1.60	120	0.015	105	104	256.0	1.00	4.64	15.3	104.2	173.9	144.3	66.2	170.4	274	88	88	77		1.001	38.629	4029
18	2.841	2.878		0.16	0.16	1.31	1.03	0.32	84	84	77	2.02	1.60	120	0.016	102	100	255.0	1.00	4.56	15.4	104.2	174.0	144.3	66.2	170.4	274	88	88	77		1.001	37.980	3962
19	2.999	3.036		0.16	0.16	1.30	1.03	0.32	84	84	77	2.02	1.60	120	0.016	102	100	254.5	0.50	4.45	15.3	104.3	174.0	144.4	66.2	170.5	274	88	88	77		1.001	37.004	3864
20	3.157	3.196		0.16	0.16	1.30	1.03	0.32	85	84	77	2.01	1.60	119	0.017	99	98	254.0	0.50	4.58	15.4	104.3	174.1	144.4	66.2	170.5	274	88	88	77		1.001	38.143	3984
21	3.315	3.353		0.16	0.16	1.30	1.03	0.32	85	84	77	2.01	1.60	120	0.018	96	94	253.0	1.00	4.58	15.4	104.5	174.3	144.4	66.2	170.7	274	88	88	77		1.001	38.141	3989
22	3.473	3.512		0.16	0.16	1.30	1.03	0.32	85	84	77	2.01	1.60	119	0.017	99	98	252.0	1.00	4.64	15.3	104.5	174.2	144.5	66.2	170.7	274	88	88	77		1.001	38.625	4040
23	3.630	3.670		0.16	0.16	1.30	1.02	0.32	85	84	77	2.00	1.60	119	0.016	101	100	251.5	0.50	4.54	15.4	104.6	174.4	144.6	66.2	170.8	273	88	88	77		1.001	37.815	3960
24	3.790	3.829		0.16	0.16	1.35	1.06	0.32	85	84	77	2.05	1.60	119	0.016	103	101	250.5	1.00	4.50	15.4	104.7	174.5	144.6	66.2	170.9	273	88	88	77		1.001	37.492	3931
25	3.951	3.989		0.16	0.16	1.36	1.04	0.32	85	85	77	2.05	1.70	119	0.016	104	101	250.0	0.50	4.66	15.3	104.7	174.5	144.6	66.2	170.9	274	88	88	77		1.001	38.763	4063
26	4.112	4.148		0.16	0.16	1.35	1.04	0.32	85	85	77	2.05	1.70	120	0.016	104	100	249.0	1.00	4.57	15.4	104.8	174.6	144.8	66.2	171.0	276	88	88	77		1.001	38.048	3992
27	4.272	4.307		0.16	0.16	1.35	1.04	0.32	86	85	77	2.06	1.70	120	0.016	103	100	248.5	0.50	4.63	15.4	104.8	174.6	144.7	66.2	171.0	276	88	88	77		1.001	38.539	4043
28	4.433	4.466		0.16	0.16	1.35	1.03	0.32	86	85	77	2.07	1.70	120	0.016	104	100	247.3	1.19	4.67	15.4	104.8	174.6	144.7	66.2	171.0	276	88	88	77		1.001	38.869	4077
29	4.594	4.624		0.16	0.16	1.35	1.03	0.32	86	85	77	2.05	1.70	120	0.016	104	100	246.5	0.82	4.56	15.3	105.0	174.8	144.8	66.2	171.3	276	88	88	77		1.001	37.973	3993
30	4.755	4.783		0.16	0.16	1.35	1.03	0.32	86	85	77	2.07	1.70	120	0.016	104	100	245.9	0.61	4.58	15.3	105.0	174.8	144.8	66.2	171.2	275	88	88	77		1.001	38.136	4007
31	4.916	4.941		0.16	0.16	1.35	1.02	0.32	86	85	77	2.07	1.70	120	0.017	101	97	245.1	0.77	4.56	15.3	105.2	175.0	145.0	66.2	171.4	276	88	88	77		1.001	37.977	3998
32	5.077	5.099		0.16	0.16	1.34	1.02	0.32	86	86	77	2.06	1.70	120	0.016	104	100	244.3	0.78	4.52	15.3	105.1	174.9	144.9	66.2	171.3	275	88	88	77		1.001	37.651	3961
33	5.238	5.258		0.16	0.16	1.33	1.02	0.32	86	86	77	2.09	1.70	120	0.016	104	100	243.6	0.69	4.52	15.3	105.1	175.0	145.0	66.2	171.4	275	88	88	77		1.001	37.655	3964
34	5.398	5.415		0.16	0.16	1.33	1.01	0.32	86	86	77	2.10	1.80	120	0.017	100	96	242.9	0.69	4.58	15.4	105.2	175.0	145.1	66.2	171.5	274	88	88	77		1.001	38.135	4018
35	5.558	5.573		0.16	0.16	1.33	1.01	0.32	87	86	77	2.09	1.80	119	0.016	103	100	242.3	0.68	4.58	15.4	105.2	175.0	145.2	66.2	171.4	274	88	88	77		1.001	38.137	4015
36	5.718	5.730		0.16	0.16	1.34	1.01	0.32	87	86	77	2.11	1.80	120	0.016	103	99	241.5	0.74	4.58	15.3	105.2	175.0	145.0	66.2	171.5	274	88	87	77		1.001	38.136	4017
37	5.878	5.888		0.16	0.16	1.33	1.08	0.32	87	86	77	2.10	1.90	120	0.016	103	100	240.9	0.59	4.52	15.4	105.3	175.1	145.1	66.2	171.5	274	88	87	77		1.001	37.650	3969
38	6.039	6.050		0.16	0.16	1.33	1.07	0.32	87	86	77	2.10	1.90	120	0.016	103	102	240.2	0.76	4.56	15.4	105.3	175.1	145.1	66.2	171.5	274	88	87	77		1.001	37.977	4002
39	6.199	6.211		0.16	0.16	1.34	1.07	0.32	87	86	77	2.09	1.90	120	0.016	103	102	239.6	0.61	4.66	15.4	105.3	175.1	145.0	66.2	171.5	274	88	87	77		1.001	38.787	4088
40	6.359	6.372		0.16	0.16	1.33	1.06	0.32	87	87	77	2.10	1.90	120	0.015	106	105	238.9	0.65	4.60	15.4	105.4	175.2	145.2	66.2	171.7	273	87	87	77		1.001	38.313	4044
41	6.519	6.534		0.16	0.16	1.33	1.06	0.32	87	87	77	2.09	1.90	120	0.016	103	102	238.3	0.61	4.62	15.3	105.3	175.1	145.2	66.2	171.6	273	87	87	77		1.001	38.464	4056
42	6.679	6.694		0.16	0.16	1.33	1.05	0.32	87	87	77	2.09	1.90	120	0.016	103	101	237.4	0.86	4.56	15.3	105.4	175.2	145.2	66.2	171.6	273	87	87	77		1.001	37.968	4005
43	6.839	6.854		0.16	0.16	1.33	1.05	0.32	87	87	77	2.11	1.90	120	0.013	114	112	236.7	0.77	4.56	15.3	105.2	175.1	145.1	66.2	171.5	273	87	87	77		1.001	37.984	4002
44	6.999	7.015		0.16	0.16	1.33	1.05	0.32	88	87	77	2.10	1.90	120	0.017	100	98	236.2	0.48	4.64	15.4	105.3	175.1	145.1	66.2	171.6	273	87	87	77		1.001	38.622	4072
45	7.160	7.175		0.16	0.16	1.33	1.04	0.32	88	87	77	2.12	1.90	120	0.015	107	104	235.4	0.78	4.52	15.4	105.2	175.0	145.1	66.2	171.4	273	87	87	77		1.001	37.655	3965
46	7.320	7.335		0.16	0.16	1.33	1.04	0.32	88	87	77	2.10	1.90	120	0.016	103	101	234.9	0.54	4.70	15.3	105.2	175.0	145.1	66.2	171.5	273	87	87	77		1.001	39.110	4120

Elapsed Time	Particulate Sampling Data																	Fuel Weight, lb		Flow, gpm		Temperature Data, oF												
	Gas Meter Cubic Feet (1)	Gas Meter Cubic Feet (2)	Gas Meter Cubic Feet (amb)	Sample Rate, cfm (1)	Sample Rate, cfm (2)	Orifice dH (1)	Orifice dH (2)	Orifice dH (amb)	Meter oF (1)	Meter oF (2)	Meter oF (amb)	Meter Vac. In. Hg. (1)	Meter Vac. In. Hg. (2)	Dilution Tunnel Temp.	Dilution Tunnel dP	Pro. Rate (%) (1)	Pro. Rate (%) (2)	Scale Reading	Weight Change	Load Side Liquid Flow Rate	Boiler Side Liquid Flow Rate (optional)	Thermopile ΔT	Boiler to Heat Exch. Temp.	Heat Exch to Boiler Temp.	Inlet Load Temp.	Outlet Load Temp.	Stack	Filter (1)	Filter (2)	Ambient		Specific Heat of Inlet Water (BTU/lb-°F)	Mass Flow Rate of Inlet Water (lb/min)	Heat Output, Btu
47	7.480	7.495		0.16	0.16	1.34	1.04	0.32	88	87	77	2.10	2.00	121	0.016	103	101	234.1	0.80	4.60	15.3	105.1	174.9	145.0	66.3	171.3	273	87	87	77		1.001	38.302	4028
48	7.640	7.655		0.16	0.16	1.33	1.04	0.32	88	87	77	2.11	2.00	121	0.016	103	101	233.3	0.73	4.44	15.4	105.2	175.0	145.1	66.3	171.4	274	88	87	77		1.001	37.000	3896
49	7.801	7.814		0.16	0.16	1.33	1.03	0.32	88	87	77	2.14	2.00	121	0.016	103	100	232.7	0.66	4.62	15.4	105.1	174.8	145.2	66.3	171.3	274	88	88	77		1.001	38.462	4046
50	7.961	7.975		0.16	0.16	1.33	1.07	0.32	88	87	77	2.11	1.90	121	0.016	103	101	232.0	0.68	4.58	15.4	105.0	174.8	145.0	66.3	171.2	274	88	87	77		1.001	38.142	4008
51	8.122	8.137		0.16	0.16	1.32	1.06	0.32	88	88	77	2.14	1.90	121	0.016	103	102	231.4	0.53	4.64	15.4	104.9	174.7	144.9	66.3	171.1	274	88	88	77		1.001	38.629	4056
52	8.281	8.299		0.16	0.16	1.33	1.07	0.32	88	88	77	2.12	1.90	120	0.017	99	99	230.6	0.79	4.64	15.4	105.0	174.8	145.0	66.3	171.2	272	88	87	77		1.001	38.621	4059
53	8.442	8.460		0.16	0.16	1.33	1.07	0.32	88	88	77	2.13	1.90	121	0.017	100	98	229.9	0.77	4.54	15.3	104.9	174.7	144.8	66.3	171.1	273	88	87	77		1.001	37.806	3969
54	8.602	8.622		0.16	0.16	1.32	1.07	0.32	88	88	77	2.11	1.90	121	0.017	100	99	229.3	0.53	4.70	15.3	104.9	174.7	144.8	66.3	171.1	273	88	88	77		1.001	39.109	4106
55	8.762	8.784		0.16	0.16	1.32	1.06	0.32	88	88	77	2.13	1.90	121	0.017	100	99	228.5	0.81	4.56	15.3	104.8	174.7	144.8	66.3	171.1	273	88	87	77		1.001	37.975	3984
56	8.922	8.945		0.16	0.16	1.33	1.06	0.32	88	88	77	2.12	1.90	121	0.015	106	105	227.9	0.65	4.57	15.3	104.8	174.6	144.9	66.3	171.1	273	88	88	77		1.001	38.053	3992
57	9.082	9.107		0.16	0.16	1.32	1.06	0.32	89	88	77	2.12	1.90	121	0.016	102	102	227.1	0.74	4.54	15.3	104.8	174.7	144.9	66.3	171.1	273	88	88	77		1.001	37.814	3968
58	9.242	9.269		0.16	0.16	1.32	1.06	0.32	89	88	77	2.14	1.90	121	0.016	102	102	226.7	0.45	4.67	15.3	104.9	174.8	144.9	66.3	171.2	273	88	88	77		1.001	38.904	4086
59	9.402	9.430		0.16	0.16	1.32	1.06	0.32	89	88	77	2.13	1.90	121	0.016	102	101	226.0	0.71	4.58	15.3	104.9	174.7	144.8	66.3	171.1	273	88	88	77		1.001	38.138	4004
60	9.562	9.591		0.16	0.16	1.32	1.06	0.32	89	88	77	2.13	1.90	121	0.016	102	101	225.1	0.93	4.58	15.4	104.8	174.7	144.8	66.3	171.1	273	88	88	77		1.001	38.137	4003
61	9.725	9.753		0.16	0.16	1.35	1.06	0.32	89	88	77	2.07	1.90	122	0.014	112	109	224.4	0.61	4.60	15.4	104.8	174.6	144.8	66.3	171.0	273	86	88	77		1.001	38.303	4017
62	9.887	9.915		0.16	0.16	1.34	1.05	0.32	89	88	77	2.11	1.90	122	0.017	101	99	223.8	0.60	4.76	15.3	104.7	174.6	144.8	66.3	171.0	273	87	88	77		1.001	39.598	4153
63	10.048	10.075		0.16	0.16	1.34	1.05	0.32	89	88	77	2.09	1.90	121	0.017	100	98	223.2	0.59	4.37	15.4	104.9	174.7	145.1	66.3	171.2	273	87	88	77		1.001	36.355	3819
64	10.210	10.237		0.16	0.16	1.34	1.07	0.32	89	88	77	2.14	1.90	121	0.015	107	105	222.4	0.86	4.58	15.4	104.8	174.6	145.2	66.3	171.1	273	87	88	77		1.001	38.137	4003
65	10.371	10.399		0.16	0.16	1.34	1.07	0.32	89	88	77	2.11	1.90	122	0.016	103	102	222.0	0.41	4.54	15.5	104.7	174.6	144.8	66.3	171.0	274	87	88	77		1.001	37.814	3963
66	10.532	10.562		0.16	0.16	1.34	1.07	0.32	89	88	77	2.11	1.90	122	0.016	103	103	221.2	0.81	4.56	15.3	104.7	174.5	144.7	66.3	170.9	274	88	88	77		1.001	37.977	3980
67	10.694	10.724		0.16	0.16	1.34	1.07	0.32	89	88	77	2.13	1.90	122	0.015	107	105	220.4	0.76	4.56	15.3	104.6	174.5	144.6	66.2	170.9	275	87	88	77		1.001	37.978	3978
68	10.855	10.886		0.16	0.16	1.34	1.07	0.32	89	89	77	2.12	1.90	122	0.017	100	99	219.8	0.59	4.50	15.3	104.7	174.5	144.7	66.2	170.9	275	87	88	77		1.001	37.493	3929
69	11.017	11.048		0.16	0.16	1.35	1.09	0.32	89	89	77	2.14	1.90	122	0.017	101	99	219.0	0.77	4.48	15.4	104.8	174.7	144.8	66.2	171.0	275	88	88	77		1.001	37.325	3916
70	11.178	11.212		0.16	0.16	1.35	1.09	0.32	89	89	77	2.11	1.90	122	0.016	103	103	218.2	0.81	4.52	15.3	104.7	174.6	144.8	66.3	171.0	275	88	88	77		1.001	37.659	3948
71	11.339	11.376		0.16	0.16	1.35	1.09	0.32	89	89	77	2.10	1.80	122	0.017	100	100	217.7	0.54	4.70	15.4	104.6	174.5	144.7	66.3	170.9	275	88	88	77		1.001	39.087	4095
72	11.501	11.539		0.16	0.16	1.35	1.08	0.32	89	89	77	2.13	1.80	122	0.015	107	106	217.0	0.73	4.70	15.4	104.6	174.5	144.7	66.3	170.9	275	88	88	77		1.001	39.101	4095
73	11.662	11.703		0.16	0.16	1.35	1.09	0.32	89	89	77	2.17	1.80	122	0.016	103	103	216.4	0.57	4.54	15.3	104.7	174.5	144.7	66.2	170.9	276	88	88	77		1.001	37.767	3958
74	11.823	11.866		0.16	0.16	1.34	1.09	0.32	90	89	77	2.11	1.80	122	0.015	106	106	215.5	0.87	4.64	15.4	104.7	174.5	144.6	66.2	170.9	276	88	88	77		1.001	38.614	4046
75	11.984	12.030		0.16	0.16	1.34	1.09	0.32	90	89	77	2.14	1.80	122	0.016	103	103	214.8	0.71	4.29	15.4	104.9	174.5	145.4	66.2	171.2	275	88	88	77		1.001	35.706	3751
76	12.146	12.194		0.16	0.16	1.34	1.08	0.32	90	89	77	2.11	1.90	122	0.016	104	103	214.1	0.71	4.64	15.3	104.7	174.5	144.9	66.3	171.0	275	88	88	77		1.001	38.609	4047
77	12.307	12.357		0.16	0.16	1.34	1.08	0.32	90	89	77	2.12	1.90	122	0.014	110	110	213.5	0.66	4.54	15.4	104.6	174.5	144.7	66.3	170.9	275	88	88	77		1.001	37.800	3959
78	12.468	12.521		0.16	0.16	1.34	1.09	0.32	90	89	77	2.13	1.80	122	0.016	103	103	212.7	0.71	4.60	15.4	104.5	174.4	144.5	66.2	170.8	275	88	88	77		1.001	38.286	4007
79	12.629	12.684		0.16	0.16	1.35	1.09	0.32	90	89	77	2.11	1.80	121	0.016	103	102	211.9	0.81	4.54	15.3	104.5	174.3	144.6	66.2	170.7	275	88	88	77		1.001	37.798	3955
80	12.791	12.847		0.16	0.16	1.34	1.09	0.32	90	89	77	2.12	1.90	121	0.016	104	102	211.0	0.94	4.46	15.2	104.5	174.3	144.4	66.2	170.7	276	88	88	77		1.001	37.153	3886
81	12.952	13.010		0.16	0.16	1.34	1.08	0.32	90	89	78	2.14	1.90	121	0.016	103	102	210.0	1.03	4.68	15.3	104.3	174.2	144.5	66.2	170.6	276	88	88	78		1.001	38.931	4067
82	13.113	13.174		0.16	0.16	1.34	1.08	0.32	90	89	78	2.14	1.90	121	0.013	114	114	209.8	0.13	4.62	15.4	104.3	174.2	144.5	66.3	170.6	275	88	88	78		1.001	38.446	4016
83	13.274	13.337		0.16	0.16	1.34	1.08	0.32	90	89	78	2.11	1.90	120	0.015	106	106	209.3	0.54	4.54	15.3	104.2	174.1	144.4	66.3	170.4	275	88	88	78		1.001	37.799	3943
84	13.435	13.499		0.16	0.16	1.34	1.08	0.32	90	89	78	2.13	1.90	120	0.014	110	109	208.4	0.87	4.56	15.3	104.2	174.1	144.3	66.2	170.5	275	88	88	78		1.001	37.965	3961
85	13.596	13.662		0.16	0.16	1.34	1.09	0.32	90	89	78	2.13	1.90	121	0.016	103	102	207.7	0.72	4.65	15.3	104.1	174.0	144.3	66.2	170.4	277	88	89	78		1.001	38.740	4039
86	13.757	13.826		0.16	0.16	1.33	1.09	0.32	90	89	78	2.14	1.90	121	0.015	106	106	207.0	0.72	4.60	15.3	104.1	173.9	144.2	66.2	170.3	278	88	89	78		1.001	38.256	3986
87	13.918	13.989		0.16	0.16	1.34	1.08	0.32	90	90	78	2.17	1.90	121	0.016	103	102	206.2	0.73	4.63	15.4	104.0	173.9	144.2	66.2	170.3	278	88	89	78		1.001	38.530	4013
88	14.079	14.152		0.16	0.16	1.34	1.08	0.32	90	90	78	2.11	1.90	121	0.016	103	102	205.4	0.83	4.59	15.4	104.0	173.8	144.2	66.3	170.2	279	88	89	78		1.001	38.206	3977
89	14.241	14.315		0.16	0.16	1.34	1.09	0.32	90	90	78	2.12	1.90	122	0.016	104	102	204.7	0.73	4.56	15.4	104.0	173.9	144.2	66.3	170.3	277	88	89	78		1.001	37.960	3952
90	14.402	14.479		0.16	0.16	1.34	1.09	0.32	90	90	78	2.11	1.80	121	0.017	100	100	203.9	0.79	4.48	15.4	104.0	173.9	144.2	66.3	170.3	277	89	89	78		1.001	37.310	3886
91	14.563	14.643		0.16	0.16	1.34	1.09	0.32	90	90	78	2.14	1.80	120	0.015	106	106	203.2	0.70	4.62	15.3	104.0	173.8	144.2	66.3	170.2	277	88	89	78		1.001	38.448	4002
92	14.724	14.807		0.16	0.16	1.34	1.09	0.32	90	90	78	2.13	1.80	121	0.017	100	100	202.4	0.79	4.54	15.3	104.1	174.0	144.4	66.3	170.4	278	89	89	78		1.001	37.798	3939
93	14.885	14.970		0.16	0.16	1.33	1.09	0.32	90	90	78	2.16	1.80	122	0.016	103	102	201.7	0.68	4.46	15.4	104.2	174.2	144.3	66.3	170.5	278	88	89	78		1.001	37.150	3877
94	15.047	15.134		0.16	0.16	1.33	1.09	0.32	91	90	78	2.13	1.80	121	0.016	103	103	201.0	0.74	4.60	15.3	104.2	174.1	144.4	66.3	170.5	278	88	89	78		1.001	38.282	3993
95	15.208	15.297		0.16	0.16	1.33	1.09	0.32	91	90	78	2.13	1.90	121	0.016	103	102	200.2	0.82	4.62	15.4	104.3	174.2	144.4	66.3	170.5	278	89	89	78		1.001	38.446	4013
96	15.369	15.461		0.16	0.16	1.33	1.09	0.32	91	90	77	2.13	1.80	121	0.017	100	100	199.5	0.69	4.58	15.4	104.3	174.2	144.5	66.3	170.6	278	88	89	77		1.001	38.125	3981
97	15.530	15.624		0.16	0.16	1.33	1.09	0.32	91	90	77	2.14	1.80	121	0.016	103	102	198.6	0.85	4.56	15.3	104.3	174.2	144.5	66.3	170.6	279	89	89	77		1.001	37.962	3963
98	15.690	15.789		0.16	0.16	1.33	1.08	0.32	91	90	77	2.14	1.80	122	0.015	106	107	197.8	0.79	4.54	15.3	104.3	174.2	144.5	66.3	170.6	279	89	89	77		1.001	37.802	3948
99	15.851	15.952		0.16	0.16	1.33	1.09	0.32	91	90	77	2.11	1.90	122	0.016	103	102	197.4	0.48	4.44	15.4	104.4	174.3	144.6	66.3	170.7	279	88	89	77		1.001	36.993	3865
100	16.012	16.115		0.16	0.16	1.33	1.08	0.32	91	90	78	2.14	1.90	122	0.016	103	102	196.6	0.73	4.70	15.3	104.3	174.3	144.5	66.3	170.6	280	88	89	78		1.001	39.105	4083
101	16.173	16.278		0.16	0.16	1.33	1.09	0.32	91	90	78	2.15	1.90	122	0.016	103	102	195.9	0.77	4.54	15.4	104.3	174.3	144.5	66.3	170.7	279	88	88	78		1.001	37.827	3952
102	16.334	16.442		0.16	0.16	1.33	1.09	0.32	91	90	78	2.13	1.90	121	0.015	106	106	195.2	0.68	4.60	15.3	104.4	174.4	144.7	66.3	170.8	277	88	88	78		1.001	38.255	4000
103	16.495	16.606		0.16	0.16	1.33	1.09	0.32	91	90	78	2.13	1.90	122	0.016	103	103	194.5	0.73	4.70	15.4	104.5	174.5	144.6	66.3	170.9	279	88	88	78		1.001	39.153	4098
104	16.656	16.770		0.16	0.16	1.33	1.09	0.32	91	90	78	2.12	1.90	122	0.016	103	103	193.8	0.68	4.57	15.3	104.5	174.5	144.7	66.3	170.9	280	88	88	78		1.001	38.019	3979
105	16.817	16.933		0.16	0.16	1.33	1.09	0.32	91	90	78	2.13	1.90	123	0.016	103	102	193.0	0.75	4.52	15.4	104.7	174.6	144.8	66.3	171.0	279	88	88	78		1.001	37.632	3943
106	16.978	17.096		0.16	0.16	1.33	1.09	0.32	91	90	78	2.16	1.90	121	0.016	103	102	192.4	0.61	4.46	15.4	104.7	174.7	144.9	66.4	171.1	279	88	88	78		1.001	37.151	3895
107	17.139	17.260		0.16	0.16	1.33	1.09	0.32	91	90	78	2.14	1.80	122	0.013	114	114	191.7	0.77	4.56	15.4	104.8	174.8	144.9	66.4	171.1	279	88	88	78		1.001	37.955	3981
108	17.300	17.423		0.16	0.16	1.32	1.09	0.32	91	90	78	2.16	1.90	122	0.016	103	102	190.9	0.71	4.64	15.4	104.8	174.8	144.9	66.4	171.2	280	88	88	78		1.001	38.604	4051

Elapsed Time	Particulate Sampling Data																	Fuel Weight, lb		Flow, gpm		Temperature Data, oF												
	Gas Meter Cubic Feet (1)	Gas Meter Cubic Feet (2)	Gas Meter Cubic Feet (amb)	Sample Rate, cfm (1)	Sample Rate, cfm (2)	Orifice dH (1)	Orifice dH (2)	Orifice dH (amb)	Meter oF (1)	Meter oF (2)	Meter oF (amb)	Meter Vac. In. Hg. (1)	Meter Vac. In. Hg. (2)	Dilution Tunnel Temp.	Dilution Tunnel dP	Pro. Rate (%) (1)	Pro. Rate (%) (2)	Scale Reading	Weight Change	Load Side Liquid Flow Rate	Boiler Side Liquid Flow Rate (optional)	Thermopile ΔT	Boiler to Heat Exch. Temp.	Heat Exch to Boiler Temp.	Inlet Load Temp.	Outlet Load Temp.	Stack	Filter (1)	Filter (2)	Ambient		Specific Heat of Inlet Water (BTU/lb-°F)	Mass Flow Rate of Inlet Water (lb/min)	Heat Output, Btu
109	17.461	17.587		0.16	0.16	1.33	1.08	0.32	91	90	78	2.13	1.90	123	0.016	103	103	190.2	0.75	4.64	15.3	104.9	174.9	145.0	66.4	171.3	281	88	88	78		1.001	38.605	4056
110	17.622	17.751		0.16	0.16	1.33	1.08	0.32	91	90	78	2.17	1.90	123	0.016	103	103	189.5	0.72	4.58	15.3	105.0	175.0	145.0	66.3	171.3	281	88	88	78		1.001	38.118	4007
111	17.783	17.913		0.16	0.16	1.33	1.09	0.32	91	90	78	2.12	1.90	123	0.016	103	102	188.8	0.64	4.70	15.3	105.1	175.1	145.1	66.3	171.4	281	88	88	78		1.001	39.088	4112
112	17.944	18.077		0.16	0.16	1.33	1.09	0.32	91	90	78	2.15	1.90	123	0.016	103	103	188.1	0.78	4.56	15.4	105.1	175.1	145.1	66.3	171.5	282	88	89	78		1.001	37.954	3995
113	18.105	18.241		0.16	0.16	1.33	1.09	0.32	91	90	78	2.13	1.90	123	0.017	100	100	187.4	0.69	4.70	15.4	105.2	175.2	145.2	66.4	171.6	281	88	89	78		1.001	39.089	4118
114	18.266	18.405		0.16	0.16	1.33	1.09	0.32	91	90	78	2.14	1.90	123	0.016	103	103	186.7	0.63	4.56	15.4	105.3	175.3	145.3	66.4	171.7	281	88	89	78		1.001	37.961	4004
115	18.427	18.568		0.16	0.16	1.33	1.09	0.32	91	90	78	2.15	1.90	123	0.016	103	102	185.8	0.94	4.62	15.4	105.4	175.3	145.3	66.3	171.7	282	88	89	78		1.001	38.439	4055
116	18.588	18.731		0.16	0.16	1.33	1.08	0.32	91	90	78	2.17	1.90	122	0.015	106	106	185.2	0.58	4.62	15.3	105.4	175.4	145.3	66.4	171.8	280	88	88	78		1.001	38.432	4057
117	18.749	18.894		0.16	0.16	1.34	1.08	0.32	91	90	78	2.14	1.90	123	0.016	103	102	184.5	0.71	4.62	15.3	105.5	175.5	145.4	66.4	171.9	280	88	88	78		1.001	38.442	4060
118	18.910	19.057		0.16	0.16	1.33	1.09	0.32	91	91	78	2.16	1.90	123	0.015	106	105	183.8	0.67	4.56	15.3	105.5	175.5	145.4	66.4	171.9	280	88	88	78		1.001	37.959	4009
119	19.070	19.221		0.16	0.16	1.33	1.08	0.32	91	91	78	2.13	1.90	123	0.014	109	110	183.1	0.71	4.63	15.3	105.6	175.6	145.5	66.4	171.9	277	88	88	78		1.001	38.577	4078
120	19.231	19.384		0.16	0.16	1.33	1.08	0.32	91	91	78	2.15	1.90	121	0.016	103	102	182.3	0.80	4.58	15.3	105.5	175.6	145.4	66.4	171.9	277	88	88	78		1.001	38.102	4026
121	19.392	19.547		0.16	0.16	1.33	1.08	0.32	91	91	78	2.19	1.90	122	0.016	103	102	181.7	0.61	4.64	15.5	105.5	175.5	145.4	66.4	171.9	278	88	88	78		1.001	38.603	4078
122	19.553	19.710		0.16	0.16	1.33	1.07	0.32	91	91	78	2.13	1.90	122	0.016	103	102	180.9	0.79	4.54	15.3	105.5	175.5	145.4	66.4	171.9	279	88	88	78		1.001	37.795	3992
123	19.714	19.872		0.16	0.16	1.33	1.08	0.32	91	91	78	2.17	1.90	123	0.016	103	102	180.3	0.64	4.72	15.3	105.5	175.6	145.5	66.4	171.9	280	89	88	78		1.001	39.253	4146
124	19.874	20.036		0.16	0.16	1.32	1.08	0.32	91	91	78	2.17	1.90	123	0.016	102	103	179.5	0.78	4.60	15.3	105.5	175.5	145.5	66.4	171.8	280	89	88	78		1.001	38.278	4042
125	20.035	20.199		0.16	0.16	1.32	1.08	0.32	91	91	78	2.20	1.90	123	0.016	103	102	178.9	0.66	4.68	15.4	105.5	175.6	145.5	66.4	171.9	280	88	87	78		1.001	38.928	4113
126	20.195	20.361		0.16	0.16	1.32	1.07	0.32	92	91	78	2.17	1.90	123	0.014	109	109	178.1	0.71	4.54	15.3	105.5	175.5	145.4	66.4	171.8	281	89	87	78		1.001	37.794	3990
127	20.356	20.523		0.16	0.16	1.32	1.07	0.32	92	91	78	2.15	1.90	123	0.013	114	113	177.4	0.73	4.58	15.3	105.5	175.6	145.5	66.4	171.9	281	89	87	78		1.001	38.120	4027
128	20.516	20.686		0.16	0.16	1.32	1.07	0.32	92	91	78	2.19	1.90	123	0.016	102	102	176.8	0.66	4.56	15.4	105.6	175.6	145.5	66.4	172.0	282	89	87	78		1.001	37.959	4013
129	20.676	20.849		0.16	0.16	1.32	1.07	0.32	92	91	78	2.22	1.90	123	0.016	102	102	176.0	0.81	4.52	15.3	105.6	175.6	145.5	66.4	172.0	282	89	87	78		1.001	37.627	3978
130	20.836	21.011		0.16	0.16	1.31	1.06	0.32	92	91	78	2.18	1.90	123	0.017	99	98	175.3	0.68	4.27	15.2	105.6	175.7	145.5	66.4	172.0	282	89	88	78		1.001	35.530	3757
131	20.996	21.173		0.16	0.16	1.31	1.07	0.32	92	91	78	2.19	1.90	123	0.016	102	102	174.4	0.92	4.54	15.4	105.9	175.7	146.4	66.4	172.3	283	89	88	78		1.001	37.798	4009
132	21.156	21.335		0.16	0.16	1.30	1.07	0.32	92	91	78	2.18	1.90	123	0.016	102	102	173.8	0.59	4.48	15.4	105.6	175.7	145.6	66.4	172.0	283	89	88	78		1.001	37.327	3948
133	21.315	21.498		0.16	0.16	1.31	1.07	0.32	92	91	78	2.21	1.90	123	0.015	105	105	173.0	0.79	4.53	15.4	105.8	175.9	145.6	66.4	172.2	283	88	88	78		1.001	37.719	3996
134	21.475	21.659		0.16	0.16	1.31	1.07	0.32	92	91	78	2.21	1.90	123	0.016	102	101	172.3	0.73	4.59	15.4	105.9	175.9	145.7	66.3	172.2	282	88	88	78		1.001	38.241	4054
135	21.635	21.821		0.16	0.16	1.31	1.06	0.32	92	91	78	2.21	1.90	123	0.016	102	102	171.5	0.77	4.56	15.3	105.9	175.9	145.7	66.3	172.2	280	88	88	78		1.001	37.962	4024
136	21.795	21.982		0.16	0.16	1.32	1.06	0.32	92	91	78	2.16	1.90	122	0.017	99	98	170.9	0.61	4.48	15.3	105.9	176.0	145.7	66.4	172.3	281	88	88	78		1.001	37.305	3957
137	21.955	22.145		0.16	0.16	1.32	1.06	0.32	92	91	78	2.19	1.90	123	0.016	102	102	170.0	0.82	4.54	15.3	106.0	176.0	145.8	66.4	172.3	282	88	88	78		1.001	37.796	4009
138	22.115	22.306		0.16	0.16	1.32	1.05	0.32	92	91	78	2.19	1.90	123	0.017	99	98	169.4	0.69	4.54	15.4	106.0	176.0	145.7	66.4	172.3	282	88	88	78		1.001	37.793	4009
139	22.275	22.467		0.16	0.16	1.32	1.05	0.32	92	91	78	2.20	1.90	123	0.017	99	98	168.6	0.78	4.52	15.2	106.0	176.1	145.8	66.4	172.4	283	88	89	78		1.001	37.632	3995
140	22.435	22.628		0.16	0.16	1.32	1.06	0.32	92	91	78	2.20	1.90	123	0.017	99	98	167.8	0.74	4.64	15.3	106.1	176.1	145.7	66.3	172.4	281	87	88	78		1.001	38.605	4099
141	22.596	22.790		0.16	0.16	1.31	1.05	0.32	92	91	78	2.18	2.00	123	0.016	103	102	167.3	0.53	4.58	15.4	106.1	176.1	145.8	66.3	172.4	282	88	89	78		1.001	38.117	4047
142	22.756	22.950		0.16	0.16	1.31	1.04	0.32	92	91	78	2.21	2.00	123	0.016	102	100	166.3	0.98	4.50	15.3	106.1	176.1	145.9	66.3	172.4	283	88	89	78		1.001	37.470	3980
143	22.917	23.111		0.16	0.16	1.31	1.05	0.32	92	91	78	2.22	2.00	124	0.016	103	101	165.5	0.81	4.60	15.4	106.1	176.2	145.8	66.4	172.5	283	88	89	78		1.001	38.281	4066
144	23.076	23.272		0.16	0.16	1.31	1.04	0.32	92	91	78	2.22	2.00	124	0.016	102	101	164.9	0.65	4.56	15.3	106.1	176.1	145.9	66.4	172.4	283	88	89	78		1.001	37.959	4031
145	23.236	23.432		0.16	0.16	1.31	1.03	0.32	92	91	78	2.20	2.00	124	0.016	102	100	164.0	0.87	4.54	15.3	106.1	176.2	145.9	66.4	172.5	283	88	89	78		1.001	37.793	4014
146	23.396	23.592		0.16	0.16	1.30	1.04	0.32	92	91	78	2.20	2.00	124	0.017	99	97	163.2	0.76	4.56	15.3	106.2	176.2	145.9	66.4	172.5	283	88	89	78		1.001	37.966	4035
147	23.554	23.752		0.16	0.16	1.30	1.04	0.32	92	91	78	2.22	2.00	124	0.016	101	100	162.7	0.49	4.58	15.4	106.2	176.3	146.0	66.4	172.6	283	88	89	78		1.001	38.107	4052
148	23.713	23.913		0.16	0.16	1.29	1.03	0.32	92	91	78	2.22	2.00	123	0.016	101	101	161.8	0.99	4.60	15.3	106.3	176.4	146.0	66.4	172.7	283	88	88	78		1.001	38.314	4077
149	23.872	24.071		0.16	0.16	1.30	1.03	0.32	92	91	78	2.22	2.00	124	0.015	105	102	161.1	0.64	4.62	15.3	106.3	176.4	146.0	66.4	172.7	282	88	88	78		1.001	38.430	4091
150	24.031	24.231		0.16	0.16	1.30	1.03	0.32	92	91	78	2.23	2.00	123	0.017	98	97	160.4	0.73	4.62	15.3	106.4	176.5	146.1	66.4	172.7	282	88	88	78		1.001	38.442	4094
151	24.190	24.391		0.16	0.16	1.30	1.03	0.32	92	91	78	2.24	2.00	124	0.016	102	100	159.5	0.85	4.68	15.3	106.5	176.6	146.1	66.4	172.8	281	88	88	78		1.001	38.927	4149
152	24.349	24.549		0.16	0.16	1.30	1.02	0.32	92	91	78	2.25	2.00	123	0.016	101	99	158.9	0.62	4.58	15.3	106.5	176.6	146.1	66.4	172.9	280	88	88	78		1.001	38.118	4065
153	24.509	24.709		0.16	0.16	1.36	1.03	0.32	92	91	78	2.29	2.00	123	0.016	102	100	158.3	0.62	4.66	15.3	106.5	176.6	146.3	66.4	172.9	280	88	88	78		1.001	38.767	4134
154	24.672	24.868		0.16	0.16	1.35	1.03	0.32	92	91	78	2.25	2.00	123	0.018	98	94	157.5	0.78	4.62	15.3	106.5	176.6	146.2	66.4	172.9	279	88	88	78		1.001	38.440	4098
155	24.834	25.027		0.16	0.16	1.36	1.03	0.32	92	91	78	2.28	2.00	123	0.017	100	97	156.8	0.77	4.60	15.3	106.5	176.6	146.2	66.4	172.9	280	88	88	78		1.001	38.280	4080
156	24.997	25.187		0.16	0.16	1.36	1.03	0.32	92	91	78	2.28	2.00	123	0.015	107	104	156.0	0.72	4.50	15.3	106.5	176.6	146.2	66.4	172.9	281	88	88	78		1.001	37.472	3996
157	25.160	25.345		0.16	0.16	1.36	1.02	0.32	92	91	78	2.30	2.00	123	0.015	107	102	155.3	0.69	4.60	15.4	106.6	176.7	146.3	66.4	173.0	281	88	88	78		1.001	38.280	4085
158	25.322	25.504		0.16	0.16	1.36	1.02	0.32	92	91	78	2.28	2.00	123	0.016	103	100	154.5	0.85	4.62	15.3	106.5	176.7	146.3	66.4	173.0	281	88	88	78		1.001	38.443	4101
159	25.485	25.663		0.16	0.16	1.37	1.02	0.32	92	91	78	2.27	2.10	123	0.016	104	100	153.8	0.65	4.54	15.4	106.5	176.6	146.2	66.4	172.9	281	88	88	78		1.001	37.793	4030
160	25.648	25.821		0.16	0.16	1.36	1.01	0.32	92	91	78	2.28	2.10	123	0.016	104	99	153.0	0.86	4.50	15.4	106.6	176.7	146.2	66.4	173.0	281	88	88	78		1.001	37.477	3998
161	25.811	25.980		0.16	0.16	1.37	1.01	0.32	92	91	78	2.30	2.10	124	0.016	104	100	152.3	0.71	4.47	15.3	106.5	176.7	146.3	66.4	173.0	282	88	88	78		1.001	37.237	3972
162	25.974	26.137		0.16	0.16	1.36	1.01	0.32	92	91	78	2.29	2.10	124	0.016	104	98	151.5	0.77	4.63	15.2	106.6	176.7	146.3	66.4	173.0	282	88	89	78		1.001	38.566	4114
163	26.136	26.295		0.16	0.16	1.36	1.01	0.32	92	91	78	2.30	2.10	123	0.017	100	96	150.8	0.69	4.62	15.3	106.5	176.7	146.3	66.4	172.9	281	88	88	78		1.001	38.437	4099
164	26.299	26.453		0.16	0.16	1.35	0.99	0.32	92	91	78	2.33	2.10	124	0.016	104	99	150.0	0.86	4.56	15.4	106.4	176.5	146.2	66.4	172.8	283	89	89	78		1.001	37.996	4048
165	26.462	26.609		0.16	0.16	1.35	0.98	0.32	92	91	78	2.30	2.20	124	0.016	104	98	149.1	0.86	4.60	15.3	106.4	176.5	146.2	66.4	172.8	284	89	89	78		1.001	38.282	4078
166	26.625	26.764		0.16	0.15	1.35	0.97	0.32	92	91	78	2.32	2.20	124	0.016	104	97	148.2	0.92	4.60	15.3	106.4	176.5	146.2	66.4	172.8	286	89	89	78		1.001	38.282	4076
167	26.785	26.919		0.16	0.16	1.30	1.10	0.32	92	91	78	2.44	2.50	124	0.016	102	97	147.5	0.69	4.56	15.3	106.3	176.6	146.1	66.5	172.8	284	89	89	78		1.001	37.958	4040
168	26.944	27.083		0.16	0.16	1.30	1.08	0.32	92	91	78	2.46	2.50	124	0.017	99	100	146.6	0.92	4.58	15.3	106.2	176.5	146.2	66.6	172.8	284	88	89	78		1.001	38.115	4053
169	27.102	27.246		0.16	0.16	1.29	1.06	0.32	92	91	78	2.46	2.50	124	0.016	101	102	145.9	0.69	4.72	15.3	106.3	176.6	146.3	66.6	172.9	285	88	89	78		1.001	39.257	4176
170	27.261	27.407		0.16	0.16	1.29	1.06	0.32	92	91	78	2.49	2.50	124	0.016	102	101	144.9	0.96	4.60	15.3	106.2	176.6	146.3	66.7	172.9	283	88	89	78		1.001	38.283	4070

Elapsed Time	Particulate Sampling Data																	Fuel Weight, lb		Flow, gpm		Temperature Data, oF													
	Gas Meter Cubic Feet (1)	Gas Meter Cubic Feet (2)	Gas Meter Cubic Feet (amb)	Sample Rate, cfm (1)	Sample Rate, cfm (2)	Orifice dH (1)	Orifice dH (2)	Orifice dH (amb)	Meter oF (1)	Meter oF (2)	Meter oF (amb)	Meter Vac. In. Hg. (1)	Meter Vac. In. Hg. (2)	Dilution Tunnel Temp.	Dilution Tunnel dP	Pro. Rate (%) (1)	Pro. Rate (%) (2)	Scale Reading	Weight Change	Load Side Liquid Flow Rate	Boiler Side Liquid Flow Rate (optional)	Thermopile ΔT	Boiler to Heat Exch. Temp.	Heat Exch to Boiler Temp.	Inlet Load Temp.	Outlet Load Temp.	Stack	Filter (1)	Filter (2)	Ambient		Specific Heat of Inlet Water (BTU/lb-°F)	Mass Flow Rate of Inlet Water (lb/min)	Heat Output, Btu
171	27.419	27.569		0.16	0.16	1.29	1.06	0.32	92	91	78	2.49	2.60	124	0.017	98	99	144.4	0.51	4.62	15.4	106.2	176.7	146.4	66.7	173.0	284	88	89	78		1.001	38.441	4088
172	27.579	27.731		0.16	0.16	1.29	1.05	0.32	92	91	78	2.46	2.60	124	0.016	102	102	143.4	1.04	4.52	15.3	106.2	176.7	146.4	66.8	173.0	283	88	89	78		1.001	37.628	4000
173	27.737	27.890		0.16	0.16	1.28	1.04	0.32	92	91	78	2.49	2.60	123	0.016	101	100	142.8	0.59	4.58	15.3	106.1	176.6	146.4	66.9	172.9	283	88	88	78		1.001	38.111	4048
174	27.895	28.050		0.16	0.16	1.28	1.03	0.32	92	91	78	2.49	2.60	123	0.015	104	104	142.0	0.80	4.58	15.4	106.0	176.7	146.4	66.9	173.0	284	88	88	78		1.001	38.121	4047
175	28.053	28.211		0.16	0.16	1.28	1.03	0.32	92	91	78	2.49	2.70	123	0.017	98	98	141.3	0.69	4.52	15.4	106.0	176.7	146.6	67.0	173.0	283	88	88	78		1.001	37.625	3994
176	28.210	28.369		0.16	0.16	1.28	1.02	0.32	92	91	78	2.49	2.70	123	0.016	100	99	140.4	0.85	4.50	15.4	106.0	176.7	146.5	67.0	173.0	283	88	88	78		1.001	37.479	3979
177	28.368	28.527		0.16	0.16	1.29	1.01	0.32	92	91	78	2.49	2.70	124	0.016	101	99	139.6	0.83	4.53	15.3	106.1	176.7	146.6	66.9	173.0	281	88	88	78		1.001	37.698	4005
178	28.527	28.685		0.16	0.16	1.28	1.00	0.32	92	91	78	2.50	2.70	122	0.016	101	99	139.0	0.60	4.54	15.4	106.1	176.7	146.5	66.8	173.0	281	88	88	78		1.001	37.819	4019
179	28.685	28.842		0.16	0.16	1.28	1.01	0.32	92	91	78	2.53	2.80	123	0.016	101	98	138.1	0.91	4.56	15.4	106.1	176.6	146.4	66.8	172.9	283	88	88	78		1.001	37.967	4035
180	28.843	29.000		0.16	0.16	1.27	1.00	0.32	92	91	78	2.51	2.80	123	0.016	101	99	137.3	0.78	4.42	15.4	106.3	176.7	146.4	66.7	173.0	284	88	88	78		1.001	36.821	3917
181	29.002	29.159		0.16	0.16	1.29	1.03	0.32	92	91	78	2.54	2.90	123	0.017	98	97	136.6	0.73	4.64	15.4	106.4	176.7	146.5	66.7	173.1	283	88	88	78		1.001	38.602	4111
182	29.161	29.318		0.16	0.16	1.29	1.01	0.32	92	91	78	2.53	3.00	123	0.016	101	100	135.7	0.88	4.58	15.4	106.4	176.7	146.3	66.6	173.0	284	88	88	78		1.001	38.117	4059
183	29.319	29.476		0.16	0.16	1.29	0.99	0.32	92	91	78	2.54	3.10	124	0.017	98	96	134.9	0.85	4.60	15.3	106.5	176.8	146.4	66.6	173.1	283	88	89	78		1.001	38.280	4082
184	29.478	29.631		0.16	0.16	1.29	0.97	0.32	92	91	78	2.54	3.20	123	0.017	98	94	134.1	0.70	4.58	15.3	106.9	177.1	146.6	66.5	173.4	283	89	89	78		1.001	38.120	4080
185	29.636	29.786		0.16	0.16	1.29	0.95	0.32	92	91	78	2.57	3.30	124	0.015	104	100	133.3	0.86	4.73	15.3	107.1	177.3	146.8	66.5	173.6	282	89	89	78		1.001	39.414	4228
186	29.796	29.939		0.16	0.15	1.29	0.95	0.32	92	91	78	2.55	3.30	123	0.016	102	96	132.6	0.67	4.54	15.4	107.3	177.5	146.9	66.5	173.8	281	89	89	78		1.001	37.794	4060
187	29.955	30.092		0.16	0.15	1.29	0.94	0.32	92	91	78	2.58	3.30	123	0.015	105	99	131.8	0.85	4.52	15.4	107.4	177.5	146.9	66.4	173.8	281	89	88	78		1.001	37.629	4045
188	30.113	30.245		0.16	0.15	1.29	0.94	0.32	92	91	78	2.56	3.30	123	0.017	98	93	131.0	0.80	4.58	15.3	107.4	177.6	147.0	66.4	173.8	281	89	88	78		1.001	38.124	4100
189	30.272	30.401		0.16	0.16	1.32	1.05	0.32	92	91	78	2.61	3.70	123	0.017	98	95	130.2	0.82	4.58	15.3	107.5	177.6	146.9	66.4	173.9	281	89	88	78		1.001	38.124	4103
190	30.433	30.561		0.16	0.16	1.32	1.02	0.32	92	91	78	2.63	3.80	123	0.016	103	100	129.5	0.65	4.58	15.3	107.6	177.7	147.1	66.4	174.0	281	89	88	78		1.001	38.122	4107
191	30.594	30.718		0.16	0.16	1.33	1.01	0.32	92	91	78	2.61	3.80	123	0.015	106	102	128.6	0.94	4.48	15.3	107.7	177.8	147.1	66.4	174.1	280	89	88	78		1.001	37.311	4023
192	30.754	30.876		0.16	0.16	1.33	1.01	0.32	92	91	78	2.61	3.90	123	0.017	99	96	128.0	0.55	4.46	15.4	107.7	177.8	147.0	66.4	174.0	279	89	88	78		1.001	37.150	4005
193	30.915	31.035		0.16	0.16	1.33	1.00	0.32	92	91	78	2.62	3.90	123	0.016	103	100	127.1	0.88	4.56	15.4	107.5	177.6	146.9	66.4	173.9	278	88	88	78		1.001	37.985	4090
194	31.076	31.192		0.16	0.16	1.32	1.05	0.32	92	91	78	2.63	4.40	123	0.016	103	98	126.5	0.66	4.48	15.4	107.4	177.5	146.8	66.4	173.7	278	88	87	78		1.001	37.316	4011
195	31.237	31.353		0.16	0.16	1.33	1.04	0.32	92	91	78	2.61	4.40	123	0.016	103	101	125.6	0.84	4.56	15.4	107.3	177.5	146.7	66.4	173.7	278	88	87	78		1.001	37.952	4077
196	31.398	31.513		0.16	0.16	1.33	1.04	0.32	92	91	78	2.62	4.40	123	0.016	103	100	124.9	0.79	4.64	15.2	107.3	177.4	146.8	66.4	173.7	279	88	87	78		1.001	38.605	4148
197	31.559	31.674		0.16	0.16	1.33	1.05	0.32	92	91	78	2.60	4.40	123	0.015	106	104	124.3	0.58	4.64	15.4	107.3	177.4	146.8	66.4	173.6	279	88	87	78		1.001	38.609	4147
198	31.720	31.835		0.16	0.16	1.33	1.07	0.32	92	91	78	2.60	4.30	123	0.017	100	98	123.3	0.97	4.64	15.4	107.2	177.4	146.7	66.4	173.6	279	88	87	78		1.001	38.605	4145
199	31.881	32.000		0.16	0.16	1.33	1.10	0.32	92	91	78	2.65	4.10	123	0.015	106	107	122.6	0.68	4.52	15.4	107.2	177.3	146.6	66.4	173.6	279	88	88	78		1.001	37.634	4040
200	32.041	32.166		0.16	0.17	1.33	1.15	0.32	92	91	78	2.62	3.80	123	0.016	102	104	121.8	0.84	4.60	15.3	107.2	177.3	146.7	66.4	173.5	280	89	88	78		1.001	38.282	4107
201	32.202	32.337		0.16	0.17	1.33	1.21	0.32	92	91	78	2.61	3.60	123	0.016	103	107	120.9	0.85	4.60	15.3	107.1	177.2	146.7	66.4	173.5	280	89	88	78		1.001	38.283	4106
202	32.362	32.511		0.16	0.17	1.33	1.26	0.32	92	91	78	2.63	3.40	123	0.016	102	109	120.1	0.78	4.48	15.3	107.2	177.3	146.7	66.4	173.6	280	89	88	78		1.001	37.307	4005
203	32.523	32.688		0.16	0.18	1.32	1.29	0.32	92	91	78	2.62	3.20	124	0.015	106	115	119.3	0.87	4.62	15.3	107.2	177.3	146.6	66.4	173.5	280	89	89	78		1.001	38.446	4125
204	32.683	32.867		0.16	0.18	1.32	1.32	0.32	92	91	78	2.65	3.20	124	0.016	102	112	118.4	0.86	4.52	15.3	107.1	177.3	146.6	66.4	173.5	280	89	89	78		1.001	37.632	4037
205	32.844	33.046		0.16	0.18	1.32	1.32	0.32	92	91	78	2.65	3.20	124	0.016	103	112	117.7	0.75	4.58	15.4	107.2	177.3	146.8	66.4	173.6	281	89	89	78		1.001	38.124	4091
206	33.004	33.215		0.16	0.17	1.32	1.10	0.32	92	91	78	2.65	2.70	124	0.015	106	109	116.8	0.87	4.58	15.3	107.1	177.2	146.7	66.4	173.5	281	89	89	78		1.001	38.129	4090
207	33.164	33.380		0.16	0.16	1.31	1.11	0.32	92	91	78	2.66	2.70	124	0.017	99	100	115.9	0.84	4.52	15.4	107.0	177.1	146.6	66.4	173.4	284	89	90	78		1.001	37.632	4032
208	33.324	33.545		0.16	0.16	1.21	1.10	0.32	92	91	78	3.05	2.70	124	0.016	102	103	114.9	1.01	4.63	15.4	106.9	177.0	146.5	66.4	173.2	283	90	90	78		1.001	38.524	4121
209	33.428	33.710		0.10	0.16	0.41	1.11	0.32	92	91	78	6.70	2.70	123	0.016	66	103	114.1	0.83	4.58	15.3	106.7	176.8	146.3	66.4	173.0	282	89	90	78		1.001	38.121	4071
210	33.512	33.875		0.08	0.16	0.35	1.11	0.32	92	91	78	7.26	2.70	123	0.013	59	115	113.3	0.78	4.61	15.3	106.4	176.5	146.1	66.4	172.7	281	88	90	78		1.001	38.386	4089
211	33.591	34.040		0.08	0.16	0.33	1.11	0.32	92	91	78	7.36	2.70	123	0.015	52	107	112.4	0.92	4.60	15.3	106.4	176.5	146.0	66.4	172.7	284	88	90	78		1.001	38.281	4076
212	33.671	34.195		0.08	0.16	0.33	0.70	0.32	92	91	78	7.41	4.50	125	0.017	50	94	111.6	0.78	4.56	15.4	106.3	176.4	146.1	66.4	172.7	286	88	89	78		1.001	37.959	4042
213	33.747	34.328		0.08	0.13	0.33	0.72	0.32	92	91	78	7.42	4.40	125	0.017	47	81	110.5	1.07	4.48	15.3	106.4	176.5	146.1	66.4	172.8	287	88	89	78		1.001	37.306	3974
214	33.826	34.463		0.08	0.13	0.32	0.73	0.32	92	91	78	7.47	4.30	125	0.017	49	82	109.6	1.00	4.70	15.4	106.4	176.6	146.1	66.4	172.8	289	88	89	78		1.001	39.093	4166
215	33.903	34.598		0.08	0.13	0.32	0.75	0.32	92	91	78	7.47	4.20	125	0.016	49	85	108.7	0.87	4.56	15.3	106.5	176.6	146.2	66.4	172.9	287	88	89	78		1.001	37.955	4047
216	33.982	34.735		0.08	0.14	0.50	0.74	0.32	92	91	78	8.83	4.30	124	0.016	50	86	107.9	0.83	4.56	15.3	106.4	176.6	146.2	66.4	172.8	286	87	89	78		1.001	37.962	4045
217	34.037	34.885		0.05	0.15	0.35	1.03	0.32	91	91	78	9.83	5.40	124	0.016	35	94	106.9	0.96	4.60	15.3	106.4	176.5	146.2	66.4	172.8	285	87	89	78		1.001	38.287	4079
218	34.108	35.045		0.07	0.16	0.10	1.03	0.32	91	91	78	13.85	5.30	124	0.016	45	100	106.1	0.78	4.62	15.3	106.4	176.5	146.1	66.4	172.7	286	87	89	78		1.001	38.443	4094
219	34.143	35.205		0.04	0.16	0.11	1.05	0.32	91	91	78	13.95	5.20	124	0.016	22	100	105.1	1.01	4.60	15.4	106.4	176.5	146.1	66.4	172.7	286	86	89	78		1.001	38.283	4077
220	34.211	35.368		0.07	0.16	0.08	1.10	0.32	91	91	78	14.50	4.90	124	0.017	42	99	104.2	0.92	4.54	15.3	106.4	176.5	146.1	66.4	172.7	286	86	89	78		1.001	37.798	4025
221	34.231	35.509		0.02	0.14	0.06	0.62	0.32	91	91	78	9.92	7.80	124	0.016	13	88	103.3	0.91	4.60	15.3	106.4	176.5	146.1	66.4	172.7	285	86	85	78		1.001	38.286	4077
222	34.244	35.620		0.01	0.11	0.07	0.46	0.32	91	91	78	9.92	9.00	124	0.015	9	72	102.3	0.92	4.52	15.3	106.4	176.5	146.2	66.4	172.7	284	85	88	78		1.001	37.638	4009
223	34.256	35.727		0.01	0.11	0.07	0.45	0.32	91	91	78	9.93	9.10	124	0.016	8	67	101.5	0.81	4.55	15.4	106.5	176.7	146.3	66.4	172.9	286	85	88	78		1.001	37.906	4043
224	34.269	35.834		0.01	0.11	0.06	0.45	0.32	91	91	78	9.90	9.10	124	0.015	9	69	100.6	0.91	4.60	15.4	106.7	176.8	146.3	66.4	173.0	286	84	88	78		1.001	38.276	4087
225	34.283	35.940		0.01	0.11	0.13	0.45	0.32	91	91	78	6.42	9.10	123	0.016	9	66	99.6	1.01	4.53	15.3	106.7	176.9	146.4	66.4	173.1	287	84	88	78		1.001	37.692	4027
226	34.407	36.048		0.12	0.11	1.25	0.46	0.32	91	91	78	1.54	9.20	124	0.015	82	70	98.8	0.86	4.61	15.3	106.8	176.9	146.4	66.4	173.2	287	84	88	78		1.001	38.369	4102
227	34.565	36.154		0.16	0.11	1.25	0.45	0.32	91	91	78	1.55	9.20	121	0.016	101	66	97.9	0.82	4.52	15.3	106.7	177.0	146.5	66.4	173.2	284	83	87	78		1.001	37.635	4022
228	34.721	36.261		0.16	0.11	1.17	0.45	0.32	91	91	78	1.76	9.10	121	0.015	103	69	97.1	0.83	4.48	15.3	106.6	176.9	146.4	66.5	173.1	279	83	88	78		1.001	37.314	3984
229	34.873	36.368		0.15	0.11	1.17	0.45	0.32	91	91	78	1.70	9.20	122	0.015	100	69	96.3	0.83	4.58	15.3	106.5	176.8	146.4	66.5	173.0	283	84	87	78		1.001	38.120	4064
230	35.025	36.475		0.15	0.11	1.17	0.45	0.32	91	91	78	1.72	9.20	123	0.016	97	67	95.4	0.91	4.70	15.4	106.4	176.7	146.3	66.5	172.9	283	84	88	78		1.001	39.093	4163
231	35.176	36.582		0.15	0.11	1.13	0.46	0.32	91	91	78	1.88	9.20	123	0.016	97	67	94.4	1.02	4.64	15.3	106.6	176.9	146.4	66.6	173.1	285	84	87	78		1.001	38.607	4118
232	35.331	36.689		0.16	0.11	1.27	0.45	0.32	91	91	78	2.04	9.20	124	0.017	96	65	93.5	0.89	4.54	15.3	106.6	177.0	146.5	66.6	173.2	287	84	88	78		1.001	37.799	4035

Elapsed Time	Particulate Sampling Data																	Fuel Weight, lb		Flow, gpm		Temperature Data, oF													
	Gas Meter Cubic Feet (1)	Gas Meter Cubic Feet (2)	Gas Meter Cubic Feet (amb)	Sample Rate, cfm (1)	Sample Rate, cfm (2)	Orifice dH (1)	Orifice dH (2)	Orifice dH (amb)	Meter oF (1)	Meter oF (2)	Meter oF (amb)	Meter Vac. In. Hg. (1)	Meter Vac. In. Hg. (2)	Dilution Tunnel Temp.	Dilution Tunnel dP	Pro. Rate (%) (1)	Pro. Rate (%) (2)	Scale Reading	Weight Change	Load Side Liquid Flow Rate	Boiler Side Liquid Flow Rate (optional)	Thermopile ΔT	Boiler to Heat Exch. Temp.	Heat Exch to Boiler Temp.	Inlet Load Temp.	Outlet Load Temp.	Stack	Filter (1)	Filter (2)	Ambient		Specific Heat of Inlet Water (BTU/lb-°F)	Mass Flow Rate of Inlet Water (lb/min)	Heat Output, Btu
233	35.490	36.796		0.16	0.11	1.28	0.41	0.32	91	91	78	2.04	9.60	123	0.016	102	67	92.5	0.95	4.54	15.4	106.7	177.1	146.5	66.6	173.3	287	85	87	78		1.001	37.795	4039
234	35.647	36.898		0.16	0.10	1.28	0.52	0.32	91	91	78	2.02	8.30	124	0.017	97	62	91.7	0.81	4.68	15.3	106.7	177.1	146.6	66.6	173.3	286	86	86	78		1.001	38.929	4160
235	35.806	37.050		0.16	0.15	1.28	0.92	0.32	91	91	78	2.01	0.90	124	0.016	102	95	90.7	0.97	4.54	15.3	106.9	177.2	146.6	66.6	173.5	288	86	86	78		1.001	37.794	4043
236	35.964	37.196		0.16	0.15	1.28	0.84	0.32	91	91	78	2.03	1.10	124	0.016	101	92	89.9	0.85	4.56	15.3	106.9	177.3	146.6	66.6	173.5	286	87	85	78		1.001	37.956	4064
237	36.122	37.341		0.16	0.15	1.28	0.84	0.32	92	91	78	2.03	1.10	123	0.016	101	91	89.1	0.83	4.62	15.3	107.3	177.6	147.0	66.6	173.9	285	87	86	78		1.001	38.446	4130
238	36.283	37.494		0.16	0.15	1.41	1.10	0.32	92	91	78	2.15	1.60	123	0.016	103	96	88.3	0.80	4.54	15.3	107.4	177.8	147.1	66.5	174.0	284	87	87	78		1.001	37.791	4065
239	36.448	37.659		0.16	0.16	1.40	1.10	0.32	92	91	78	2.20	1.60	122	0.015	109	107	87.3	0.95	4.65	15.3	107.6	177.9	147.2	66.5	174.1	284	87	88	78		1.001	38.737	4174
240	36.611	37.824		0.16	0.16	1.37	1.09	0.32	92	91	78	2.13	1.60	123	0.016	104	103	86.8	0.49	4.57	15.4	107.9	178.2	147.3	66.5	174.4	286	87	88	78		1.001	38.009	4107
241	36.774	37.988		0.16	0.16	1.37	1.08	0.32	92	91	78	2.08	1.60	123	0.016	104	103	85.9	0.94	4.64	15.3	108.1	178.4	147.5	66.5	174.6	286	87	88	78		1.001	38.617	4181
242	36.938	38.151		0.16	0.16	1.37	1.09	0.32	92	91	78	2.14	1.60	123	0.016	105	102	85.2	0.70	4.68	15.3	108.2	178.4	147.4	66.4	174.6	286	87	88	78		1.001	38.953	4218
243	37.101	38.314		0.16	0.16	1.37	1.09	0.32	92	91	78	2.10	1.60	123	0.017	101	99	84.3	0.87	4.56	15.4	108.3	178.5	147.5	66.4	174.7	286	87	88	78		1.001	37.967	4115
244	37.265	38.478		0.16	0.16	1.37	1.09	0.32	92	91	78	2.11	1.60	123	0.016	105	103	83.5	0.80	4.46	15.3	108.3	178.6	147.5	66.4	174.7	287	87	88	78		1.001	37.147	4028
245	37.428	38.642		0.16	0.16	1.36	1.08	0.32	92	91	78	2.11	1.60	123	0.015	107	106	82.6	0.96	4.60	15.3	108.5	178.7	147.7	66.4	174.9	288	87	89	78		1.001	38.283	4159
246	37.591	38.805		0.16	0.16	1.37	1.08	0.32	92	91	78	2.13	1.60	123	0.017	101	99	82.2	0.39	4.52	15.3	108.5	178.7	147.6	66.4	174.9	286	87	89	78		1.001	37.633	4088
247	37.755	38.968		0.16	0.16	1.37	1.08	0.32	92	91	77	2.09	1.60	123	0.016	105	102	81.2	0.95	4.60	15.3	108.6	178.8	147.7	66.4	175.0	287	87	89	77		1.001	38.289	4163
248	37.918	39.131		0.16	0.16	1.37	1.08	0.32	92	91	77	2.10	1.60	122	0.016	104	102	80.4	0.85	4.58	15.4	108.8	179.0	147.9	66.4	175.2	287	87	89	77		1.001	38.125	4153
249	38.081	39.293		0.16	0.16	1.38	1.08	0.32	92	91	77	2.11	1.60	123	0.017	101	98	79.7	0.69	4.68	15.3	108.9	179.1	147.8	66.4	175.2	285	87	89	77		1.001	38.939	4245
250	38.244	39.457		0.16	0.16	1.37	1.07	0.32	92	91	77	2.14	1.60	123	0.016	104	103	78.9	0.78	4.60	15.3	109.0	179.2	148.0	66.3	175.4	287	87	89	77		1.001	38.287	4179
251	38.407	39.619		0.16	0.16	1.36	1.07	0.32	92	91	77	2.14	1.70	123	0.016	104	102	78.1	0.77	4.56	15.3	109.3	179.5	148.2	66.3	175.6	286	87	89	77		1.001	37.966	4153
252	38.571	39.781		0.16	0.16	1.37	1.07	0.32	92	91	77	2.11	1.70	124	0.016	105	102	77.2	0.95	4.56	15.3	109.3	179.5	148.3	66.4	175.7	288	88	89	77		1.001	37.964	4154
253	38.734	39.943		0.16	0.16	1.39	1.07	0.32	92	91	78	2.12	1.70	123	0.016	104	102	76.4	0.82	4.58	15.3	109.4	179.6	148.4	66.4	175.8	287	87	89	78		1.001	38.122	4176
254	38.898	40.106		0.16	0.16	1.36	1.07	0.32	92	91	78	2.13	1.70	123	0.015	108	105	75.6	0.77	4.56	15.3	109.4	179.6	148.4	66.4	175.8	286	87	89	78		1.001	37.959	4157
255	39.061	40.268		0.16	0.16	1.36	1.06	0.32	92	91	78	2.13	1.70	122	0.016	104	101	74.9	0.73	4.62	15.3	109.5	179.7	148.4	66.4	175.9	285	87	89	78		1.001	38.455	4215
256	39.224	40.430		0.16	0.16	1.36	1.06	0.32	92	91	78	2.14	1.70	122	0.016	104	101	73.9	0.95	4.67	15.3	109.6	179.8	148.5	66.4	176.0	285	87	88	78		1.001	38.880	4265
257	39.387	40.591		0.16	0.16	1.36	1.06	0.32	92	91	78	2.11	1.70	121	0.016	104	101	73.1	0.80	4.56	15.4	109.7	179.9	148.6	66.4	176.1	283	87	89	78		1.001	37.960	4168
258	39.550	40.753		0.16	0.16	1.36	1.06	0.32	92	91	78	2.12	1.70	121	0.015	107	105	72.3	0.77	4.50	15.3	109.6	179.8	148.6	66.4	176.0	283	87	89	78		1.001	37.476	4113
259	39.713	40.914		0.16	0.16	1.35	1.05	0.32	92	91	78	2.14	1.70	121	0.016	104	101	71.9	0.47	4.52	15.3	109.7	179.8	148.6	66.4	176.1	283	87	89	78		1.001	37.634	4132
260	39.876	41.075		0.16	0.16	1.36	1.06	0.32	92	91	78	2.13	1.70	121	0.017	101	98	70.9	0.97	4.52	15.4	109.7	179.9	148.6	66.4	176.1	284	87	89	78		1.001	37.633	4133
261	40.039	41.235		0.16	0.16	1.36	1.05	0.32	92	91	78	2.14	1.70	121	0.016	104	100	70.3	0.59	4.56	15.3	109.7	179.9	148.7	66.4	176.1	283	87	89	78		1.001	37.961	4170
262	40.202	41.397		0.16	0.16	1.36	1.04	0.32	92	91	78	2.12	1.70	120	0.017	101	98	69.4	0.93	4.54	15.3	109.7	179.9	148.7	66.4	176.1	283	87	89	78		1.001	37.797	4151
263	40.364	41.557		0.16	0.16	1.36	1.05	0.32	92	91	78	2.10	1.70	121	0.015	107	103	68.7	0.68	4.52	15.3	109.8	180.0	148.8	66.4	176.2	282	87	88	78		1.001	37.635	4137
264	40.527	41.717		0.16	0.16	1.35	1.04	0.32	92	91	78	2.12	1.70	120	0.017	101	97	67.9	0.80	4.52	15.3	109.8	180.0	148.8	66.4	176.2	281	87	88	78		1.001	37.636	4138
265	40.690	41.878		0.16	0.16	1.36	1.04	0.32	92	91	78	2.09	1.70	120	0.016	104	101	67.6	0.31	4.56	15.3	109.8	180.0	148.9	66.4	176.2	282	87	88	78		1.001	37.956	4173
266	40.852	42.037		0.16	0.16	1.35	1.04	0.32	92	91	78	2.16	1.70	120	0.016	103	99	66.6	0.98	4.50	15.4	109.8	179.9	148.8	66.4	176.2	284	87	88	78		1.001	37.481	4119
267	41.014	42.197		0.16	0.16	1.35	1.03	0.32	92	91	78	2.16	1.80	121	0.016	103	100	65.2	1.38	4.50	15.3	109.7	179.9	148.7	66.4	176.1	285	87	88	78		1.001	37.466	4115
268	41.176	42.357		0.16	0.16	1.34	1.03	0.32	92	91	78	2.15	1.80	121	0.016	103	100	64.5	0.77	4.50	15.2	109.9	180.1	148.9	66.4	176.3	284	87	88	78		1.001	37.440	4119
269	41.338	42.516		0.16	0.16	1.35	1.02	0.32	92	91	78	2.17	1.80	120	0.017	100	96	62.9	1.54	4.48	15.4	110.1	180.3	149.0	66.4	176.5	281	87	88	78		1.001	37.269	4109
270	41.499	42.675		0.16	0.16	1.34	1.03	0.32	92	91	78	2.19	1.70	120	0.016	102	99	63.0	-0.04	4.46	15.3	110.0	180.2	149.0	66.4	176.4	283	87	88	78		1.001	37.162	4094
271	41.661	42.835		0.16	0.16	1.34	1.04	0.32	92	91	78	2.17	1.70	119	0.015	106	103	62.6	0.39	4.54	15.4	110.0	180.2	149.0	66.4	176.4	283	87	88	78		1.001	37.768	4159
272	41.822	42.994		0.16	0.16	1.34	1.04	0.32	92	91	78	2.16	1.70	120	0.016	102	99	61.5	1.02	4.62	15.3	110.1	180.3	149.0	66.4	176.5	283	87	88	78		1.001	38.447	4237
273	41.984	43.154		0.16	0.16	1.34	1.04	0.32	92	91	78	2.18	1.70	121	0.017	100	97	61.2	0.36	4.50	15.4	110.1	180.3	149.0	66.4	176.5	283	87	88	78		1.001	37.471	4132
274	42.145	43.315		0.16	0.16	1.34	1.03	0.32	92	91	78	2.20	1.70	120	0.016	102	101	59.8	1.41	4.50	15.3	110.2	180.4	149.2	66.4	176.6	283	86	88	78		1.001	37.474	4135
275	42.307	43.473		0.16	0.16	1.34	1.02	0.32	92	91	78	2.17	1.80	120	0.016	103	99	59.2	0.55	4.42	15.3	110.3	180.5	149.3	66.4	176.8	285	86	88	78		1.001	36.826	4068
276	42.468	43.632		0.16	0.16	1.34	1.02	0.32	92	91	78	2.18	1.80	121	0.015	106	103	58.6	0.67	4.56	15.3	110.3	180.5	149.3	66.4	176.7	285	86	88	78		1.001	37.961	4193
277	42.630	43.791		0.16	0.16	1.34	1.02	0.32	92	91	78	2.20	1.80	120	0.016	103	99	57.8	0.78	4.50	15.3	110.5	180.6	149.4	66.4	176.9	284	86	88	78		1.001	37.471	4144
278	42.791	43.949		0.16	0.16	1.34	1.02	0.32	92	91	78	2.21	1.80	120	0.016	102	99	57.1	0.72	4.46	15.4	110.5	180.7	149.3	66.4	176.9	283	86	88	78		1.001	37.152	4111
279	42.952	44.109		0.16	0.16	1.34	1.02	0.32	92	91	78	2.18	1.80	121	0.016	103	100	56.3	0.75	4.46	15.3	110.6	180.8	149.5	66.4	177.1	284	86	88	78		1.001	37.152	4115
280	43.113	44.266		0.16	0.16	1.33	1.02	0.32	92	91	78	2.18	1.80	121	0.016	103	98	55.5	0.76	4.58	15.3	110.8	180.9	149.6	66.4	177.2	286	86	88	78		1.001	38.123	4227
281	43.275	44.424		0.16	0.16	1.33	1.02	0.32	92	91	78	2.20	1.80	121	0.015	107	102	54.9	0.68	4.54	15.3	110.8	181.0	149.7	66.4	177.2	270	86	88	78		1.001	37.796	4193
282	43.436	44.583		0.16	0.16	1.34	1.01	0.32	92	91	78	2.16	1.80	101	0.015	104	101	54.6	0.26	4.56	15.3	110.8	181.0	149.7	66.4	177.3	249	83	84	78		1.001	37.949	4211
283	43.598	44.741		0.16	0.16	1.34	1.01	0.32	92	91	78	2.17	1.80	95	0.017	98	94	54.2	0.43	4.56	15.3	110.7	180.9	149.6	66.4	177.1	237	82	84	78		1.001	37.936	4205
284	43.760	44.901		0.16	0.16	1.33	1.01	0.32	92	91	78	2.21	1.80	92	0.015	104	101	53.9	0.31	4.52	15.2	110.4	180.5	149.4	66.4	176.8	228	81	82	78		1.001	37.620	4157
285	43.921	45.059		0.16	0.16	1.33	1.01	0.32	92	91	78	2.18	1.80	90	0.017	97	93	53.7	0.18	4.50	15.3	109.8	179.9	149.0	66.4	176.2	221	80	82	78		1.001	37.472	4118
286	44.083	45.219		0.16	0.16	1.33	1.01	0.32	92	91	78	2.19	1.80	90	0.015	104	101	53.4	0.31	4.46	15.4	109.4	179.5	148.8	66.4	175.8	214	80	81	78		1.001	37.139	4068
287	44.245	45.378		0.16	0.16	1.33	1.02	0.32	92	91	78	2.20	1.80	89	0.015	104	100	53.2	0.23	4.54	15.3	108.8	178.9	148.4	66.5	175.3	209	79	81	78		1.001	37.800	4119
288	44.407	45.537		0.16	0.16	1.34	1.02	0.32	92	91	78	2.15	1.70	88	0.017	97	94	53.1	0.07	4.66	15.2	108.2	178.4	147.9	66.5	174.7	206	79	80	78		1.001	38.770	4200
289	44.569	45.696		0.16	0.16	1.33	1.02	0.32	92	91	78	2.16	1.70	87	0.016	100	97	53.1	0.02	4.46	15.3	107.5	177.7	147.5	66.5	174.1	202	79	79	78		1.001	37.150	4000
290	44.731	45.857		0.16	0.16	1.34	1.02	0.32	92	91	78	2.13	1.70	86	0.017	97	95	52.9	0.14	4.52	15.3	106.7	176.8	147.0	66.6	173.2	201	78	79	78		1.001	37.636	4020
291	44.893	46.016		0.16	0.16	1.34	1.02	0.32	92	91	78	2.18	1.70	85	0.016	100	96	52.8	0.11	4.50	15.3	106.0	176.2	146.5	66.6	172.6	199	78	79	78		1.001	37.477	3977
292	45.055	46.176		0.16	0.16	1.34	1.03	0.32	92	91	78	2.16	1.70	84	0.015	103	100	52.8	0.00	4.42	15.3	105.2	175.2	145.9	66.6	171.7	197	78	79	78		1.001	36.827	3877
293	45.217	46.338		0.16	0.16	1.34	1.03	0.32	92	91	78	2.16	1.70	84	0.015	103	101	52.8	0.04	4.56	15.4	104.3	174.5	145.4	66.6	170.9	195	78	78	78		1.001	37.960	3965
294	45.380	46.498		0.16	0.16	1.34	1.04	0.32	92	91	78	2.16	1.70	83	0.015	104	100	52.7	0.06	4.46	15.3	103.3	173.4	144.5	66.6	169.9	192	77	78	78		1.001	37.157	3842

Elapsed Time	Particulate Sampling Data																	Fuel Weight, lb		Flow, gpm		Temperature Data, oF												
	Gas Meter Cubic Feet (1)	Gas Meter Cubic Feet (2)	Gas Meter Cubic Feet (amb)	Sample Rate, cfm (1)	Sample Rate, cfm (2)	Orifice dH (1)	Orifice dH (2)	Orifice dH (amb)	Meter oF (1)	Meter oF (2)	Meter oF (amb)	Meter Vac. In. Hg. (1)	Meter Vac. In. Hg. (2)	Dilution Tunnel Temp.	Dilution Tunnel dP	Pro. Rate (%) (1)	Pro. Rate (%) (2)	Scale Reading	Weight Change	Load Side Liquid Flow Rate	Boiler Side Liquid Flow Rate (optional)	Thermopile ΔT	Boiler to Heat Exch. Temp.	Heat Exch to Boiler Temp.	Inlet Load Temp.	Outlet Load Temp.	Stack	Filter (1)	Filter (2)	Ambient		Specific Heat of Inlet Water (BTU/lb-°F)	Mass Flow Rate of Inlet Water (lb/min)	Heat Output, Btu
295	45.542	46.659		0.16	0.16	1.35	1.04	0.32	92	91	78	2.11	1.70	83	0.016	100	97	52.7	0.01	4.48	15.3	102.4	172.4	143.9	66.6	169.0	189	77	77	78		1.001	37.314	3825
296	45.705	46.819		0.16	0.16	1.35	1.04	0.32	92	91	78	2.11	1.70	83	0.016	100	97	52.7	0.00	4.48	15.3	102.4	172.4	143.9	66.6	169.0	189	77	77	78		1.001	37.314	3825
297	45.868	46.983		0.16	0.16	1.35	1.05	0.32	92	91	78	2.11	1.70	83	0.016	100	99	52.8	-0.12	4.52	15.3	101.4	171.4	143.2	66.6	168.0	187	76	77	78		1.001	37.636	3820
298	46.031	47.145		0.16	0.16	1.35	1.06	0.32	92	91	77	2.13	1.60	83	0.016	100	98	52.7	0.11	4.45	15.3	100.4	170.4	142.5	66.6	167.0	184	76	76	77		1.001	37.013	3721
299	46.194	47.307		0.16	0.16	1.35	1.06	0.32	92	91	77	2.11	1.60	83	0.014	107	105	52.7	-0.02	4.50	15.3	99.3	169.4	141.6	66.6	165.9	182	76	76	77		1.001	37.449	3723
300	46.358	47.471		0.16	0.16	1.35	1.07	0.32	92	91	77	2.08	1.60	83	0.016	101	99	52.9	-0.12	4.44	15.2	98.6	168.6	141.1	66.6	165.2	179	75	76	77		1.001	36.992	3652
301	46.521	47.635		0.16	0.16	1.34	1.07	0.32	92	91	77	2.11	1.60	83	0.014	107	106	52.6	0.28	4.44	15.3	97.6	167.6	140.4	66.6	164.2	174	75	76	77		1.001	36.994	3616
302	46.685	47.798		0.16	0.16	1.36	1.07	0.32	92	91	77	2.11	1.60	82	0.016	101	98	52.7	-0.12	4.41	15.3	96.8	166.6	139.8	66.5	163.3	173	75	76	77		1.001	36.669	3552
303	46.849	47.961		0.16	0.16	1.36	1.08	0.32	92	91	78	2.09	1.60	82	0.015	104	102	52.7	-0.01	4.54	15.3	95.8	165.7	139.0	66.5	162.3	172	75	76	78		1.001	37.805	3625
304	47.012	48.125		0.16	0.16	1.36	1.08	0.32	91	91	78	2.11	1.60	82	0.017	97	96	52.7	0.00	4.42	15.4	94.9	164.7	138.4	66.5	161.4	170	75	75	78		1.001	36.834	3500
305	47.175	48.289		0.16	0.16	1.35	1.08	0.32	91	91	78	2.13	1.60	82	0.013	111	110	52.7	0.02	4.50	15.3	94.0	163.8	137.8	66.5	160.5	169	75	75	78		1.001	37.476	3527
306	47.338	48.454		0.16	0.16	1.36	1.09	0.32	92	91	78	2.09	1.60	82	0.016	100	100	52.7	0.02	4.50	15.3	93.0	162.8	136.9	66.5	159.5	167	75	75	78		1.001	37.482	3490
307	47.502	48.619		0.16	0.16	1.35	1.08	0.32	91	91	78	2.12	1.60	86	0.016	101	100	52.7	-0.03	4.35	15.4	92.1	161.9	136.2	66.5	158.6	165	75	76	78		1.001	36.190	3336
308	47.665	48.783		0.16	0.16	1.36	1.08	0.32	91	91	78	2.13	1.60	96	0.016	102	100	52.5	0.22	4.46	15.4	91.2	161.0	135.5	66.5	157.7	175	77	78	78		1.001	37.155	3391
309	47.828	48.947		0.16	0.16	1.35	1.08	0.32	91	91	78	2.12	1.60	99	0.013	113	112	51.9	0.57	4.52	15.4	90.2	160.1	134.8	66.5	156.7	190	77	78	78		1.001	37.641	3400
310	47.991	49.110		0.16	0.16	1.36	1.08	0.32	91	91	78	2.11	1.60	101	0.016	102	100	51.5	0.44	4.53	15.4	89.0	158.9	133.8	66.5	155.5	202	77	78	78		1.001	37.688	3360
311	48.155	49.274		0.16	0.16	1.36	1.09	0.32	91	91	78	2.10	1.60	103	0.016	103	101	51.0	0.45	4.59	15.4	88.3	158.1	133.3	66.5	154.8	210	77	78	78		1.001	38.184	3377
312	48.318	49.438		0.16	0.16	1.36	1.09	0.32	91	91	78	2.12	1.60	103	0.016	102	101	50.5	0.51	4.61	15.4	87.5	157.4	132.7	66.5	154.0	215	77	78	78		1.001	38.403	3366
313	48.482	49.603		0.16	0.16	1.36	1.09	0.32	91	91	78	2.10	1.60	105	0.015	107	105	50.0	0.54	4.49	15.4	87.2	157.0	132.5	66.5	153.6	218	78	78	78		1.001	37.339	3259
314	48.645	49.768		0.16	0.16	1.36	1.09	0.32	91	91	78	2.08	1.60	106	0.016	103	102	49.5	0.47	4.52	15.3	86.9	156.7	132.1	66.5	153.4	223	78	79	78		1.001	37.643	3275
315	48.808	49.932		0.16	0.16	1.37	1.09	0.32	91	91	78	2.11	1.60	107	0.016	103	101	49.0	0.54	4.68	15.4	86.7	156.6	131.9	66.5	153.2	228	79	79	78		1.001	38.937	3381
316	48.972	50.095		0.16	0.16	1.37	1.09	0.32	91	91	78	2.09	1.60	108	0.016	103	101	48.5	0.49	4.44	15.3	86.6	156.5	131.9	66.5	153.1	232	79	80	78		1.001	36.992	3207
317	49.135	50.260		0.16	0.16	1.37	1.09	0.32	91	91	77	2.09	1.60	109	0.016	103	102	47.9	0.56	4.62	15.3	86.7	156.6	131.9	66.4	153.2	235	79	80	77		1.001	38.451	3338
318	49.298	50.424		0.16	0.16	1.37	1.09	0.32	91	91	78	2.10	1.60	110	0.016	103	102	47.4	0.46	4.58	15.4	86.7	156.6	132.0	66.4	153.2	238	79	80	78		1.001	38.128	3311
319	49.461	50.588		0.16	0.16	1.37	1.09	0.32	91	91	78	2.12	1.60	111	0.016	103	102	46.9	0.52	4.64	15.3	86.8	156.7	132.0	66.4	153.3	240	80	81	78		1.001	38.614	3356
320	49.624	50.753		0.16	0.16	1.37	1.09	0.32	91	91	78	2.09	1.60	111	0.016	103	102	46.5	0.45	4.54	15.3	87.1	157.0	132.1	66.4	153.5	241	80	81	78		1.001	37.801	3296
321	49.787	50.917		0.16	0.16	1.37	1.09	0.32	91	91	77	2.14	1.60	111	0.016	103	102	46.1	0.39	4.58	15.3	87.2	157.1	132.2	66.4	153.6	243	80	81	77		1.001	38.131	3328
322	49.950	51.080		0.16	0.16	1.37	1.09	0.32	91	91	78	2.09	1.60	112	0.014	110	108	45.4	0.69	4.68	15.4	87.3	157.2	132.2	66.4	153.7	245	80	81	78		1.001	38.935	3402
323	50.114	51.244		0.16	0.16	1.36	1.09	0.32	91	91	78	2.09	1.60	113	0.015	107	105	44.9	0.49	4.60	15.3	87.6	157.5	132.4	66.4	154.0	247	81	82	78		1.001	38.302	3357
324	50.277	51.408		0.16	0.16	1.36	1.09	0.32	91	91	77	2.10	1.60	113	0.017	100	99	44.4	0.47	4.54	15.3	87.6	157.5	132.5	66.4	154.0	249	81	82	77		1.001	37.799	3314
325	50.440	51.572		0.16	0.16	1.36	1.09	0.32	91	91	78	2.10	1.60	112	0.016	103	102	44.0	0.43	4.60	15.3	87.8	157.7	132.5	66.4	154.2	249	82	83	78		1.001	38.282	3364
326	50.603	51.736		0.16	0.16	1.36	1.09	0.32	91	91	78	2.10	1.60	112	0.017	100	99	43.1	0.94	4.66	15.3	87.9	157.9	132.6	66.4	154.3	249	82	83	78		1.001	38.816	3416
327	50.767	51.900		0.16	0.16	1.35	1.09	0.32	91	91	77	2.11	1.60	112	0.017	101	99	41.7	1.39	4.48	15.3	88.0	157.9	132.7	66.4	154.4	249	82	83	77		1.001	37.310	3286
328	50.930	52.064		0.16	0.16	1.36	1.09	0.32	91	91	77	2.15	1.60	112	0.015	107	105	41.1	0.58	4.57	15.3	88.1	158.1	132.7	66.4	154.5	249	83	84	77		1.001	38.050	3355
329	51.092	52.228		0.16	0.16	1.36	1.09	0.32	91	91	77	2.13	1.60	111	0.016	103	102	40.8	0.28	4.63	15.3	88.3	158.3	132.8	66.4	154.7	249	83	84	77		1.001	38.570	3409
330	51.255	52.391		0.16	0.16	1.36	1.09	0.32	91	91	77	2.13	1.60	111	0.015	107	104	40.2	0.58	4.59	15.4	88.5	158.5	133.0	66.4	154.9	249	83	84	77		1.001	38.223	3387
331	51.418	52.555		0.16	0.16	1.36	1.09	0.32	91	91	77	2.12	1.60	112	0.016	103	102	39.7	0.55	4.79	15.3	88.8	158.8	133.0	66.4	155.2	249	83	84	77		1.001	39.912	3546
332	51.581	52.720		0.16	0.16	1.36	1.09	0.32	91	91	78	2.13	1.60	112	0.017	100	99	39.8	-0.16	4.72	15.3	89.0	159.0	133.2	66.4	155.4	250	84	84	78		1.001	39.262	3497
333	51.743	52.883		0.16	0.16	1.36	1.09	0.32	91	91	78	2.14	1.60	112	0.017	100	98	38.9	0.91	4.64	15.4	89.2	159.3	133.3	66.4	155.6	251	84	85	78		1.001	38.616	3449
334	51.906	53.046		0.16	0.16	1.37	1.08	0.32	91	90	77	2.14	1.60	112	0.017	100	98	37.9	1.01	4.70	15.4	89.5	159.5	133.5	66.4	155.8	251	84	85	77		1.001	39.100	3502
335	52.068	53.209		0.16	0.16	1.36	1.08	0.32	91	90	77	2.11	1.60	112	0.017	100	98	37.6	0.32	4.70	15.3	89.7	159.8	133.7	66.4	156.1	251	84	85	77		1.001	39.098	3511
336	52.231	53.373		0.16	0.16	1.36	1.08	0.32	91	90	77	2.13	1.60	112	0.016	103	102	36.5	1.09	4.70	15.4	90.0	160.1	134.0	66.4	156.4	251	84	85	77		1.001	39.099	3525
337	52.393	53.536		0.16	0.16	1.36	1.08	0.32	91	91	77	2.15	1.60	112	0.015	106	104	36.1	0.43	4.68	15.3	90.3	160.3	134.1	66.4	156.6	251	84	85	77		1.001	38.938	3518
338	52.556	53.699		0.16	0.16	1.36	1.08	0.32	91	90	77	2.12	1.60	112	0.016	103	101	35.2	0.90	4.62	15.3	90.5	160.6	134.3	66.4	156.9	252	84	85	77		1.001	38.451	3484
339	52.719	53.862		0.16	0.16	1.37	1.07	0.32	91	91	77	2.11	1.70	113	0.017	100	98	35.1	0.12	4.76	15.4	90.7	160.8	134.4	66.4	157.1	254	84	85	77		1.001	39.585	3594
340	52.881	54.024		0.16	0.16	1.37	1.07	0.32	91	91	77	2.12	1.70	113	0.016	103	101	34.3	0.81	4.70	15.3	90.9	161.0	134.6	66.4	157.3	256	84	85	77		1.001	39.097	3558
341	53.044	54.187		0.16	0.16	1.35	1.08	0.32	91	90	77	2.13	1.70	114	0.014	111	109	33.6	0.64	4.76	15.4	91.1	161.2	134.7	66.4	157.5	258	84	85	77		1.001	39.586	3610
342	53.207	54.350		0.16	0.16	1.36	1.08	0.32	91	90	77	2.11	1.70	114	0.016	103	102	33.1	0.49	4.68	15.4	91.3	161.4	135.0	66.4	157.7	260	84	85	77		1.001	38.937	3560
343	53.370	54.513		0.16	0.16	1.36	1.07	0.32	91	90	77	2.11	1.70	114	0.015	107	105	32.5	0.64	4.72	15.4	91.6	161.7	135.2	66.4	158.0	260	83	85	77		1.001	39.261	3601
344	53.532	54.675		0.16	0.16	1.36	1.07	0.32	91	90	77	2.12	1.70	114	0.017	100	98	31.9	0.63	4.54	15.3	91.9	162.0	135.3	66.4	158.3	259	83	85	77		1.001	37.830	3480
345	53.695	54.837		0.16	0.16	1.36	1.07	0.32	91	90	77	2.13	1.70	114	0.016	103	101	31.2	0.65	4.66	15.3	92.1	162.2	135.5	66.4	158.5	258	83	85	77		1.001	38.818	3580
346	53.857	55.000		0.16	0.16	1.35	1.09	0.32	91	90	77	2.13	1.60	113	0.015	106	105	30.7	0.53	4.63	15.5	92.4	162.6	135.7	66.4	158.8	257	83	85	77		1.001	38.556	3569
347	54.020	55.164		0.16	0.16	1.35	1.07	0.32	91	90	77	2.15	1.70	113	0.016	103	102	30.2	0.51	4.61	15.4	92.7	162.8	135.9	66.4	159.1	257	83	85	77		1.001	38.341	3557
348	54.183	55.326		0.16	0.16	1.35	1.07	0.32	91	90	77	2.14	1.70	113	0.016	103	101	29.7	0.49	4.77	15.3	92.9	163.0	136.0	66.4	159.3	257	83	85	77		1.001	39.747	3696
349	54.346	55.488		0.16	0.16	1.35	1.07	0.32	91	90	77	2.15	1.70	113	0.015	107	104	29.0	0.65	4.64	15.4	93.2	163.3	136.3	66.4	159.5	256	83	85	77		1.001	38.610	3601
350	54.508	55.651		0.16	0.16	1.35	1.08	0.32	91	90	77	2.12	1.70	113	0.017	100	98	28.7	0.30	4.62	15.3	93.3	163.5	136.4	66.4	159.7	258	83	84	77		1.001	38.451	3593
351	54.671	55.814		0.16	0.16	1.36	1.08	0.32	91	90	77	2.13	1.60	113	0.016	103	101	28.0	0.69	4.50	15.4	93.6	163.7	136.6	66.4	160.0	259	83	84	77		1.001	37.480	3512
352	54.834	55.977		0.16	0.16	1.36	1.08	0.32	91	90	77	2.14	1.60	113	0.016	103	101	27.4	0.59	4.56	15.4	93.9	164.0	136.7	66.4	160.2	259	83	84	77		1.001	37.963	3567
353	54.996	56.140		0.16	0.16	1.35	1.07	0.32	91	90	77	2.13	1.60	114	0.015	106	105	26.9	0.53	4.70	15.3	94.1	164.2	136.9	66.4	160.4	260	83	84	77		1.001	39.102	3682
354	55.159	56.302		0.16	0.16	1.36	1.08	0.32	91	90	77	2.12	1.70	115	0.014	111	108	26.4	0.50	4.70	15.4	94.5	164.7	137.2	66.4	160.9	262	83	84	77		1.001	39.099	3699
355	55.321	56.465		0.16	0.16	1.35	1.08	0.32	91	90	77	2.17	1.70	116	0.017	100	99	25.9	0.51	4.70	15.3	94.9	165.1	137.5	66.4	161.3	263	83	84	77		1.001	39.098	3717
356	55.483	56.629		0.16	0.16	1.36	1.08	0.32	91	90	77	2.16	1.70	116	0.016	103	102	25.3	0.58	4.68	15.4	95.4	165.6	137.8	66.4	161.8	264	82	84	77		1.001	38.940	3719

Elapsed Time	Particulate Sampling Data																		Fuel Weight, lb		Flow, gpm		Temperature Data, oF												
	Gas Meter Cubic Feet (1)	Gas Meter Cubic Feet (2)	Gas Meter Cubic Feet (amb)	Sample Rate, cfm (1)	Sample Rate, cfm (2)	Orifice dH (1)	Orifice dH (2)	Orifice dH (amb)	Meter oF (1)	Meter oF (2)	Meter oF (amb)	Meter Vac. In. Hg. (1)	Meter Vac. In. Hg. (2)	Dilution Tunnel Temp.	Dilution Tunnel dP	Pro. Rate (%) (1)	Pro. Rate (%) (2)	Scale Reading	Weight Change	Load Side Liquid Flow Rate	Boiler Side Liquid Flow Rate (optional)	Thermopile ΔT	Boiler to Heat Exch. Temp.	Heat Exch to Boiler Temp.	Inlet Load Temp.	Outlet Load Temp.	Stack	Filter (1)	Filter (2)	Ambient		Specific Heat of Inlet Water (BTU/lb-°F)	Mass Flow Rate of Inlet Water (lb/min)	Heat Output, Btu
357	55.645	56.792		0.16	0.16	1.35	1.07	0.32	91	90	77	2.14	1.70	116	0.015	106	105	24.8	0.51	4.74	15.3	95.7	165.9	138.1	66.4	162.1	265	82	84	77		1.001	39.424	3777
358	55.807	56.954		0.16	0.16	1.35	1.07	0.32	91	90	77	2.14	1.70	116	0.014	110	108	24.4	0.39	4.66	15.3	96.0	166.3	138.3	66.4	162.4	265	82	84	77		1.001	38.780	3727
359	55.970	57.116		0.16	0.16	1.35	1.07	0.32	91	90	77	2.14	1.70	116	0.017	100	98	24.0	0.45	4.64	15.4	96.3	166.5	138.4	66.4	162.7	266	82	84	77		1.001	38.615	3722
360	56.132	57.279		0.16	0.16	1.36	1.08	0.32	91	90	77	2.15	1.70	116	0.016	103	102	23.3	0.63	4.62	15.4	96.5	166.7	138.6	66.4	162.9	266	82	84	77		1.001	38.455	3715
361	56.294	57.442		0.16	0.16	1.35	1.07	0.32	91	90	77	2.14	1.70	117	0.016	103	102	22.9	0.48	4.72	15.4	96.7	167.0	138.8	66.4	163.1	266	82	84	77		1.001	39.256	3801
362	56.456	57.605		0.16	0.16	1.35	1.07	0.32	91	90	77	2.14	1.70	117	0.014	110	109	22.3	0.53	4.60	15.4	96.9	167.1	138.9	66.4	163.3	267	82	84	77		1.001	38.288	3714
363	56.619	57.767		0.16	0.16	1.35	1.07	0.32	91	90	77	2.15	1.70	117	0.016	104	101	21.9	0.45	4.77	15.3	97.0	167.3	139.0	66.4	163.4	267	82	84	77		1.001	39.692	3855
364	56.781	57.929		0.16	0.16	1.35	1.08	0.32	91	90	77	2.16	1.70	117	0.016	103	101	21.5	0.36	4.58	15.4	97.3	167.6	139.2	66.4	163.7	267	82	84	77		1.001	38.147	3716
365	56.943	58.092		0.16	0.16	1.35	1.08	0.32	91	90	77	2.14	1.70	117	0.016	103	102	21.0	0.54	4.70	15.3	97.5	167.7	139.3	66.4	163.9	267	82	84	77		1.001	39.095	3816
366	57.105	58.255		0.16	0.16	1.35	1.07	0.32	91	90	77	2.15	1.70	117	0.016	103	102	20.5	0.50	4.64	15.3	97.7	168.0	139.5	66.4	164.1	267	82	84	77		1.001	38.611	3778
367	57.267	58.417		0.16	0.16	1.35	1.06	0.32	91	90	77	2.12	1.70	116	0.015	106	104	19.9	0.56	4.66	15.4	98.0	168.3	139.7	66.4	164.4	267	82	83	77		1.001	38.759	3803
368	57.429	58.579		0.16	0.16	1.35	1.07	0.32	91	90	77	2.16	1.70	116	0.016	103	101	19.5	0.41	4.70	15.3	98.2	168.5	139.9	66.4	164.6	267	82	83	77		1.001	39.098	3844
369	57.591	58.742		0.16	0.16	1.35	1.07	0.32	91	90	77	2.18	1.70	116	0.015	106	105	19.0	0.51	4.66	15.3	98.5	168.8	140.0	66.4	164.9	267	82	83	77		1.001	38.772	3823
370	57.753	58.905		0.16	0.16	1.35	1.07	0.32	91	90	77	2.16	1.70	117	0.015	106	105	18.6	0.43	4.60	15.4	98.7	168.9	140.2	66.4	165.1	267	82	83	77		1.001	38.289	3783
371	57.915	59.067		0.16	0.16	1.34	1.07	0.32	91	90	77	2.14	1.70	116	0.016	103	101	18.2	0.38	4.72	15.4	98.8	169.1	140.3	66.4	165.2	267	82	83	77		1.001	39.259	3884
372	58.077	59.229		0.16	0.16	1.35	1.07	0.32	91	90	77	2.14	1.70	116	0.016	103	101	17.8	0.40	4.62	15.3	99.0	169.2	140.5	66.4	165.4	268	82	83	77		1.001	38.454	3811
373	58.239	59.392		0.16	0.16	1.35	1.07	0.32	91	90	77	2.15	1.70	116	0.017	100	99	17.4	0.40	4.75	15.3	99.1	169.4	140.4	66.4	165.5	268	82	83	77		1.001	39.583	3927
374	58.401	59.555		0.16	0.16	1.34	1.07	0.32	91	90	77	2.15	1.70	117	0.016	103	102	16.8	0.54	4.72	15.4	99.3	169.6	140.6	66.4	165.7	268	82	83	77		1.001	39.264	3903
375	58.563	59.717		0.16	0.16	1.35	1.07	0.32	91	90	77	2.15	1.70	117	0.016	103	101	16.5	0.38	4.70	15.3	99.5	169.8	140.7	66.4	165.9	268	82	83	77		1.001	39.098	3894
376	58.725	59.879		0.16	0.16	1.34	1.07	0.32	91	90	77	2.15	1.70	117	0.016	103	101	16.1	0.35	4.66	15.2	99.5	169.8	140.8	66.4	165.9	269	82	83	77		1.001	38.775	3863
377	58.887	60.041		0.16	0.16	1.34	1.08	0.32	91	90	77	2.15	1.70	117	0.016	103	101	15.4	0.69	4.77	15.4	99.7	170.0	140.9	66.4	166.1	270	82	83	77		1.001	39.749	3969
378	59.049	60.204		0.16	0.16	1.34	1.07	0.32	91	90	77	2.17	1.70	117	0.016	103	102	14.9	0.54	4.81	15.4	99.9	170.2	141.0	66.4	166.3	270	82	83	77		1.001	40.072	4007
379	59.211	60.368		0.16	0.16	1.35	1.07	0.32	91	90	77	2.14	1.70	117	0.017	100	99	14.7	0.17	4.79	15.3	100.1	170.4	141.2	66.4	166.5	270	82	83	77		1.001	39.910	3998
380	59.373	60.530		0.16	0.16	1.34	1.07	0.32	91	90	77	2.17	1.70	117	0.016	103	101	14.2	0.52	4.74	15.3	100.2	170.6	141.3	66.4	166.6	270	82	83	77		1.001	39.428	3957
381	59.535	60.692		0.16	0.16	1.34	1.07	0.32	91	90	77	2.14	1.70	117	0.017	100	98	13.7	0.52	4.70	15.3	100.4	170.8	141.4	66.4	166.8	270	82	83	77		1.001	39.106	3931
382	59.697	60.855		0.16	0.16	1.33	1.08	0.32	91	90	77	2.18	1.70	117	0.016	103	102	13.1	0.55	4.70	15.4	100.6	170.9	141.5	66.4	167.0	269	82	83	77		1.001	39.102	3937
383	59.859	61.018		0.16	0.16	1.34	1.08	0.32	91	90	77	2.14	1.70	117	0.016	103	102	12.7	0.41	4.70	15.2	100.7	171.1	141.6	66.4	167.1	269	82	83	77		1.001	39.087	3941
384	60.020	61.181		0.16	0.16	1.34	1.06	0.32	91	90	77	2.17	1.70	117	0.016	102	102	12.4	0.29	4.72	15.3	100.9	171.2	141.9	66.4	167.4	268	82	83	77		1.001	39.281	3970
385	60.182	61.342		0.16	0.16	1.34	1.07	0.32	91	90	77	2.15	1.70	116	0.016	103	100	12.0	0.45	4.70	15.3	101.1	171.4	142.1	66.4	167.5	268	82	83	77		1.001	39.100	3958
386	60.344	61.504		0.16	0.16	1.34	1.07	0.32	91	90	77	2.17	1.70	116	0.016	103	101	11.7	0.28	4.60	15.4	101.2	171.6	142.1	66.4	167.6	267	82	83	77		1.001	38.289	3881
387	60.506	61.667		0.16	0.16	1.34	1.07	0.32	91	90	77	2.18	1.70	116	0.017	100	99	11.2	0.47	4.66	15.3	101.4	171.7	142.2	66.4	167.8	268	82	83	77		1.001	38.773	3935
388	60.668	61.831		0.16	0.16	1.34	1.07	0.32	91	90	77	2.16	1.70	116	0.016	103	102	10.6	0.58	4.62	15.4	101.5	171.8	142.2	66.4	167.9	268	82	83	77		1.001	38.450	3906
389	60.830	61.993		0.16	0.16	1.33	1.07	0.32	91	90	77	2.16	1.70	117	0.015	106	105	10.3	0.33	4.77	15.4	101.7	172.0	142.4	66.4	168.1	269	82	83	77		1.001	39.746	4045
390	60.991	62.155		0.16	0.16	1.34	1.08	0.32	91	90	77	2.15	1.70	117	0.015	106	105	10.0	0.27	4.60	15.4	101.7	172.1	142.4	66.4	168.2	269	82	83	77		1.001	38.291	3900
391	61.153	62.318		0.16	0.16	1.34	1.08	0.32	91	90	77	2.16	1.70	117	0.016	103	102	9.4	0.64	4.60	15.4	101.9	172.3	142.6	66.4	168.3	269	82	83	77		1.001	38.288	3907
392	61.315	62.481		0.16	0.16	1.33	1.07	0.32	91	90	77	2.18	1.70	117	0.015	106	105	9.1	0.30	4.76	15.3	102.0	172.4	142.6	66.4	168.4	269	82	83	77		1.001	39.585	4044
393	61.477	62.644		0.16	0.16	1.34	1.07	0.32	91	90	77	2.15	1.70	117	0.017	100	99	8.5	0.55	4.68	15.4	102.1	172.5	142.7	66.4	168.5	269	82	83	77		1.001	38.941	3981
394	61.639	62.807		0.16	0.16	1.34	1.08	0.32	91	90	77	2.15	1.60	116	0.015	106	105	8.2	0.37	4.72	15.3	102.3	172.7	142.9	66.4	168.7	268	82	83	77		1.001	39.264	4022
395	61.800	62.970		0.16	0.16	1.34	1.08	0.32	91	90	77	2.19	1.60	116	0.015	106	105	7.9	0.31	4.68	15.4	102.5	172.9	143.0	66.4	168.9	267	82	83	77		1.001	38.937	3996
396	61.962	63.133		0.16	0.16	1.34	1.08	0.32	91	90	77	2.16	1.60	116	0.016	103	102	7.4	0.51	4.72	15.3	102.6	173.0	143.1	66.4	169.0	265	82	83	77		1.001	39.261	4034
397	62.124	63.296		0.16	0.16	1.33	1.08	0.32	91	90	77	2.16	1.60	116	0.016	103	102	6.9	0.48	4.70	15.3	102.9	173.2	143.3	66.4	169.3	265	82	83	77		1.001	39.103	4027
398	62.285	63.460		0.16	0.16	1.34	1.08	0.32	91	90	77	2.15	1.60	116	0.017	99	99	6.5	0.34	4.74	15.3	103.0	173.4	143.4	66.4	169.4	267	82	83	77		1.001	39.422	4065
399	62.447	63.623		0.16	0.16	1.33	1.08	0.32	91	90	77	2.16	1.60	116	0.017	100	99	6.4	0.12	4.70	15.3	103.1	173.5	143.4	66.4	169.6	268	82	83	77		1.001	39.089	4036
400	62.609	63.786		0.16	0.16	1.33	1.09	0.32	91	90	77	2.19	1.60	116	0.016	103	102	5.9	0.48	4.57	15.3	103.3	173.7	143.6	66.4	169.7	268	82	83	77		1.001	38.002	3931
401	62.770	63.950		0.16	0.16	1.33	1.09	0.32	91	90	77	2.17	1.60	116	0.013	114	114	5.6	0.30	4.70	15.4	103.4	173.7	143.5	66.4	169.8	267	82	83	77		1.001	39.084	4045
402	62.932	64.114		0.16	0.16	1.34	1.09	0.32	91	90	77	2.15	1.60	116	0.016	103	102	5.2	0.47	4.67	15.3	103.4	173.9	143.6	66.4	169.9	267	82	84	77		1.001	38.836	4022
403	63.093	64.278		0.16	0.16	1.33	1.09	0.32	91	90	77	2.17	1.60	116	0.017	99	99	4.7	0.44	4.67	15.4	103.6	174.0	143.8	66.4	170.0	266	82	84	77		1.001	38.884	4031
404	63.255	64.442		0.16	0.16	1.33	1.09	0.32	91	90	77	2.16	1.60	116	0.015	106	106	4.4	0.29	4.63	15.3	103.6	174.1	143.8	66.4	170.1	265	82	84	77		1.001	38.508	3996
405	63.417	64.607		0.16	0.17	1.33	1.09	0.32	91	90	77	2.17	1.60	115	0.017	100	100	4.0	0.42	4.62	15.3	103.7	174.1	143.8	66.4	170.1	264	82	84	77		1.001	38.451	3992
406	63.578	64.770		0.16	0.16	1.33	1.09	0.32	91	90	77	2.16	1.60	115	0.015	106	105	3.6	0.41	4.70	15.3	103.7	174.1	143.8	66.4	170.1	263	82	84	77		1.001	39.103	4059
407	63.740	64.934		0.16	0.16	1.34	1.10	0.32	91	90	77	2.19	1.60	115	0.017	100	99	3.1	0.52	4.66	15.4	103.8	174.2	143.8	66.4	170.2	263	82	84	77		1.001	38.777	4029
408	63.901	65.099		0.16	0.17	1.34	1.10	0.32	91	90	77	2.18	1.60	115	0.015	106	106	2.7	0.37	4.70	15.4	103.7	174.1	143.8	66.4	170.1	264	82	84	77		1.001	39.098	4060
409	64.063	65.263		0.16	0.16	1.33	1.10	0.32	91	90	77	2.18	1.60	115	0.013	114	113	2.4	0.27	4.72	15.4	103.7	174.1	143.9	66.4	170.1	264	82	84	77		1.001	39.264	4077
410	64.224	65.428		0.16	0.16	1.33	1.09	0.32	91	90	76	2.17	1.60	115	0.014	109	110	2.1	0.38	4.56	15.3	103.7	174.1	143.9	66.4	170.1	264	82	84	76		1.001	37.968	3943
411	64.385	65.593		0.16	0.17	1.33	1.09	0.32	91	90	76	2.20	1.60	116	0.017	99	100	1.7	0.40	4.70	15.4	103.8	174.1	143.8	66.4	170.2	263	82	84	76		1.001	39.110	4063
412	64.547	65.757		0.16	0.16	1.33	1.09	0.32	91	90	76	2.18	1.60	116	0.016	103	102	1.2	0.44	4.66	15.3	103.8	174.2	143.9	66.4	170.2	262	82	84	76		1.001	38.782	4032
413	64.708	65.921		0.16	0.16	1.33	1.10	0.32	91	90	76	2.18	1.60	115	0.017	99	99	1.0	0.24	4.62	15.3	103.8	174.1	143.9	66.4	170.1	262	82	84	76		1.001	38.459	3995
414	64.870	66.086		0.16	0.16	1.33	1.10	0.32	91	90	77	2.15	1.60	115	0.016	103	103	0.6	0.41	4.78	15.3	103.6	174.0	143.8	66.4	170.0	262	82	84	77		1.001	39.755	4125
415	65.031	66.250		0.16	0.16	1.33	1.10	0.32	91	90	77	2.16	1.60	115	0.015	106	106	0.2	0.40	4.70	15.3	103.6	174.0	143.8	66.4	170.0	260	82	84	77		1.001	39.103	4057
416	65.192	66.415		0.16	0.17	1.32	1.10	0.32	91	90	77	2.18	1.60	115	0.015	106	106	0.1	0.05	4.70	15.3	103.5	173.9	143.7	66.4	169.9	259	82	84	77		1.001	39.094	4052
417	65.354	66.580		0.16	0.16	1.32	1.09	0.32	91	90	77	2.20	1.60	115	0.016	103	103	0.0	0.09	4.74	15.3	103.6	173.9	143.8	66.4	170.0	258	82	84	77		1.001	39.421	4087
418	65.515	66.744		0.16	0.16	1.32	1.09	0.32	91	90	77	2.21	1.60	114	0.016	102	102	0.0	0.00	4.62	15.4	103.4	173.8	143.6	66.4	169.8	256	82	84	77		1.001	38.455	3981

Elapsed Time	Particulate Sampling Data																	Fuel Weight, lb		Flow, gpm		Temperature Data, oF												
	Gas Meter Cubic Feet (1)	Gas Meter Cubic Feet (2)	Gas Meter Cubic Feet (amb)	Sample Rate, cfm (1)	Sample Rate, cfm (2)	Orifice dH (1)	Orifice dH (2)	Orifice dH (amb)	Meter oF (1)	Meter oF (2)	Meter oF (amb)	Meter Vac. In. Hg. (1)	Meter Vac. In. Hg. (2)	Dilution Tunnel Temp.	Dilution Tunnel dP	Pro. Rate (%) (1)	Pro. Rate (%) (2)	Scale Reading	Weight Change	Load Side Liquid Flow Rate	Boiler Side Liquid Flow Rate (optional)	Thermopile ΔT	Boiler to Heat Exch. Temp.	Heat Exch to Boiler Temp.	Inlet Load Temp.	Outlet Load Temp.	Stack	Filter (1)	Filter (2)	Ambient		Specific Heat of Inlet Water (BTU/lb-°F)	Mass Flow Rate of Inlet Water (lb/min)	Heat Output, Btu
419	65.676	66.908	62.500	0.16	0.16	1.32	1.09	0.32	91	90	77	2.18	1.60	114	0.016	102	102	-0.1	0.11	4.68	15.3	103.3	173.7	143.6	66.4	169.7	256	82	84	77		1.001	38.956	4030
	65.676	66.908	62.500			1.29	1.04	0.32	91	90	78			117	0.016					4.59	15.34	103.3	173.4	143.8	66.4	169.7		85.34	86.04		#DIV/0!			3951
																															TOTAL:			1655304

TF_{avg}	158.639
TI_{avg}	161.275

OMNI-Test Laboratories, Inc.

Manufacturer:	Central Boiler	**Technicians:**	B. Davis
Model:	Edge 760		
Date:	08/07/19		
Run:	1		
Control #:	0117WB039E		
Test Duration:	419		
Output Category:	IV		

Test Results in Accordance with CSA B415.1-09

	HHV Basis	LHV Basis
Overall Efficiency	83.3%	89.7%
Combustion Efficiency	99.0%	99.0%
Heat Transfer Efficiency	84%	90.6%

Output Rate (kJ/h)	240,142	227,800	**(Btu/h)**
Burn Rate (kg/h)	14.49	31.95	**(lb/h)**
Input (kJ/h)	288,262	273,447	**(Btu/h)**

Test Load Weight (dry kg)	101.22	223.10	**dry lb**
MC wet (%)	17.21854305		
MC dry (%)	20.80		
Particulate (g)	59.7		
CO (g)	1,561		
Test Duration (h)	6.98		

Emissions	**Particulate**	**CO**
g/MJ Output	N/A	0.93
g/kg Dry Fuel	N/A	15.42
g/h	N/A	223.56
lb/MM Btu Output	N/A	2.16

Air/Fuel Ratio (A/F)	7.65

VERSION: **2.3** **3/23/2010**

VERSION:	2.3	3/23/2010		
Manufacturer:	Central Boiler		Appliance Type:	Non-Cat
Model:	Edge 760			
Date:	8/7/2019		Temp. Units	F (F or C)
Run:	1		Weight Units	lb (kg or lb)
Control #:	0117WB039E			
Test Duration:	419			
Output Category:	IV		Fuel Data	
				Oak
Wood Moisture (% wet):	17.22		HHV	19,887 kJ/kg
Load Weight (lb wet):	269.50		%C	50
Burn Rate (dry kg/h):	14.49		%H	6.6
Total Particulate Emissions:	59.7 g		%O	43.2
			%Ash	0.2

	Averages	0.38	14.18	#DIV/0!	267.99	77.54
					Temp. (ºF)	
Elapsed Time (min)	Fuel Weight Remaining (lb)	Flue Gas Composition (%) CO	CO_2	O_2	Flue Gas	Room Temp
0	269.50	0.02	14.68		259.7	77.0
1	269.00	0.03	14.13		239.6	77.0
2	268.00	0.15	3.56		227.3	77.0
3	267.50	0.09	3.49		248.6	77.0
4	266.50	0.29	17.81		260.2	77.0
5	266.00	0.02	17.46		265.1	77.0
6	265.00	0.03	17.11		268.0	77.0
7	264.00	0.03	17.05		269.9	77.0
8	263.50	0.03	17.28		270.7	77.0
9	262.50	0.05	16.96		271.2	77.0
10	262.00	0.05	17.01		271.9	77.0
11	261.00	0.04	17.18		272.7	77.0
12	260.00	0.04	17.15		273.0	77.0
13	259.00	0.05	16.99		273.1	77.0
14	258.50	0.05	16.91		273.5	77.0
15	257.50	0.05	16.73		273.9	77.0
16	257.00	0.05	16.54		273.9	77.0
17	256.00	0.05	16.26		273.9	77.0
18	255.00	0.05	16.45		274.1	77.0
19	254.50	0.04	16.39		274.5	77.0
20	254.00	0.04	16.37		274.3	77.0
21	253.00	0.05	16.29		274.0	77.0

22	252.00	0.05	16.25		274.2	77.0
23	251.50	0.05	15.97		273.3	77.0
24	250.50	0.04	15.58		273.2	77.0
25	250.00	0.04	15.66		274.5	77.0
26	249.00	0.05	15.79		275.6	77.0
27	248.50	0.05	16.04		275.9	77.0
28	247.31	0.05	16.03		276.0	77.0
29	246.48	0.05	16.02		275.8	77.0
30	245.88	0.05	15.66		275.5	77.0
31	245.11	0.05	15.34		275.5	77.0
32	244.33	0.06	15.19		275.4	77.0
33	243.63	0.07	15.07		274.7	77.0
34	242.95	0.05	14.82		274.2	77.0
35	242.27	0.07	14.76		274.1	77.0
36	241.52	0.06	14.76		274.1	77.0
37	240.94	0.05	14.58		274.2	77.0
38	240.17	0.05	14.12		273.9	77.0
39	239.56	0.06	13.86		273.7	77.0
40	238.91	0.05	13.62		273.5	77.0
41	238.30	0.09	13.66		273.5	77.0
42	237.43	0.07	13.66		273.3	77.0
43	236.66	0.09	13.49		273.0	77.0
44	236.18	0.11	13.36		272.8	77.0
45	235.40	0.12	13.20		272.6	77.0
46	234.85	0.14	13.07		272.8	77.0
47	234.05	0.13	13.34		273.3	77.0
48	233.32	0.17	13.36		274.1	77.0
49	232.66	0.14	13.38		274.186	77
50	231.97	0.17	13.37		274.275	77
51	231.44	0.15	13.42		273.526	77
52	230.65	0.19	12.96		272.089	77
53	229.88	0.15	13.07		272.797	77
54	229.35	0.14	13.39		272.919	77
55	228.53	0.24	13.2		272.91	77
56	227.88	0.34	13.05		272.817	77
57	227.15	0.34	12.73		272.774	77
58	226.69	0.34	12.63		272.913	77
59	225.98	0.41	12.61		272.889	77
60	225.05	0.44	12.56		273.097	77
61	224.44	0.4	12.56		273.212	77
62	223.83	0.48	12.43		272.9	77
63	223.25	0.55	12.28		272.847	77

64	222.39	0.5	12.3		273.424	77
65	221.98	0.31	12.66		273.602	77
66	221.16	0.18	12.87		273.936	77
67	220.40	0.12	13.04		274.671	77
68	219.82	0.12	13.2		275.139	77
69	219.05	0.1	13.21		274.5	77
70	218.23	0.16	12.95		275.084	77
71	217.69	0.17	13.25		274.903	77
72	216.97	0.09	13.43		275.443	77
73	216.40	0.1	13.63		275.748	77
74	215.53	0.1	13.71		275.756	77
75	214.82	0.1	13.71		275.433	77
76	214.11	0.19	13.48		275.08	77
77	213.45	0.08	13.82		274.683	77
78	212.74	0.05	13.82		275.302	77
79	211.93	0.09	13.8		275.325	77
80	211.00	0.05	14.46		276.136	77
81	209.96	0.03	15.02		276.29	78
82	209.83	0.03	15.26		275.322	78
83	209.29	0.03	15.57		274.553	78
84	208.42	0.03	15.66		275.464	78
85	207.70	0.03	15.63		276.905	78
86	206.98	0.03	15.61		277.708	78
87	206.25	0.03	15.75		278.322	78
88	205.42	0.03	15.68		278.855	78
89	204.69	0.03	15.71		277.2	78
90	203.90	0.03	15.24		277.265	78
91	203.19	0.04	15.99		277.001	78
92	202.40	0.04	15.69		278.039	78
93	201.72	0.04	15.66		277.794	78
94	200.98	0.04	15.6		277.843	78
95	200.17	0.04	15.56		277.962	78
96	199.48	0.04	15.45		278.48	77
97	198.63	0.04	15.33		278.863	77
98	197.84	0.05	15.21		279.245	77
99	197.36	0.04	14.95		279.37	77
100	196.63	0.05	15		279.935	78
101	195.86	0.06	15.37		279.204	78
102	195.18	0.05	15.1		277.498	78
103	194.45	0.05	14.28		279.13	78
104	193.78	0.05	14.74		279.994	78
105	193.03	0.05	15.02		278.924	78

106	192.42	0.05	14.68		279.25	78
107	191.65	0.05	15.02		278.643	78
108	190.94	0.04	14.58		280.168	78
109	190.19	0.04	15.05		280.909	78
110	189.48	0.04	15.15		281.262	78
111	188.84	0.05	15.14		281.396	78
112	188.06	0.05	14.94		281.544	78
113	187.37	0.05	14.7		281.401	78
114	186.74	0.05	14.57		280.905	78
115	185.81	0.06	14.52		281.611	78
116	185.23	0.04	15.01		279.647	78
117	184.52	0.04	14.24		279.927	78
118	183.85	0.04	14.23		279.628	78
119	183.14	0.05	14.2		276.984	78
120	182.33	0.05	13.44		277.299	78
121	181.72	0.04	13.8		278.079	78
122	180.93	0.04	14.46		278.818	78
123	180.29	0.05	14.7		279.909	78
124	179.51	0.05	14.55		280.224	78
125	178.86	0.05	14.43		280.411	78
126	178.15	0.05	14.58		280.517	78
127	177.42	0.04	14.76		281.298	78
128	176.76	0.04	14.84		281.55	78
129	175.96	0.04	14.83		281.633	78
130	175.28	0.04	14.6		282.131	78
131	174.36	0.04	15.31		282.598	78
132	173.77	0.04	15.33		282.639	78
133	172.99	0.03	15.16		282.584	78
134	172.25	0.04	15.21		282.46	78
135	171.48	0.04	14.9		279.959	78
136	170.87	0.04	13.8		280.742	78
137	170.05	0.04	14.65		281.594	78
138	169.35	0.04	14.8		282.112	78
139	168.58	0.05	14.7		282.934	78
140	167.84	0.04	14.85		280.69	78
141	167.31	0.04	14.22		282.085	78
142	166.33	0.04	14.73		282.923	78
143	165.52	0.04	14.85		283.371	78
144	164.87	0.04	14.8		283.364	78
145	164.00	0.04	14.76		283.103	78
146	163.24	0.03	14.72		283.287	78
147	162.75	0.03	14.54		283.247	78

148	161.76	0.04	14.5		283.164	78
149	161.12	0.04	14.41		282.356	78
150	160.39	0.05	14.01		281.583	78
151	159.54	0.05	13.92		280.759	78
152	158.92	0.05	13.9		280.077	78
153	158.30	0.05	13.77		279.56	78
154	157.52	0.07	13.74		279.426	78
155	156.75	0.05	14.06		280.398	78
156	156.03	0.03	14.42		280.851	78
157	155.35	0.03	14.48		280.59	78
158	154.50	0.03	14.3		280.768	78
159	153.85	0.04	14.21		281.104	78
160	152.99	0.05	14.16		281.269	78
161	152.28	0.05	14.1		281.851	78
162	151.50	0.04	14.42		281.523	78
163	150.82	0.07	14.41		281.304	78
164	149.95	0.04	14.84		283.027	78
165	149.09	0.03	15.68		284.389	78
166	148.17	0.03	15.71		285.636	78
167	147.48	0.03	15.75		283.542	78
168	146.56	0.03	14.85		284.346	78
169	145.87	0.03	15.07		285.158	78
170	144.91	0.03	15.22		283.414	78
171	144.40	0.03	14.47		284.325	78
172	143.36	0.03	14.87		283.447	78
173	142.77	0.03	14.56		282.785	78
174	141.97	0.04	14.59		284.127	78
175	141.28	0.04	14.87		282.515	78
176	140.43	0.04	14.71		283.319	78
177	139.60	0.04	15.08		280.921	78
178	139.00	0.05	14.03		281.221	78
179	138.09	0.05	14.63		282.531	78
180	137.31	0.05	14.98		283.879	78
181	136.58	0.04	15.09		282.527	78
182	135.70	0.04	14.57		284.408	78
183	134.85	0.04	15.2		283.052	78
184	134.15	0.08	14.4		283.236	78
185	133.29	0.14	14.45		281.824	78
186	132.62	0.22	13.88		281.051	78
187	131.77	0.34	13.82		281.051	78
188	130.97	0.1	14.12		280.822	78
189	130.15	0.15	14		280.707	78

190	129.50	0.14	14.17		280.549	78
191	128.57	0.19	14.06		280.096	78
192	128.02	0.2	13.79		278.528	78
193	127.14	0.33	13.13		278.468	78
194	126.49	0.32	13.23		277.858	78
195	125.64	0.29	13.54		277.997	78
196	124.86	0.22	13.79		278.679	78
197	124.28	0.18	14.08		278.767	78
198	123.30	0.18	13.93		279.27	78
199	122.62	0.12	14.1		279.4	78
200	121.78	0.09	14.1		279.866	78
201	120.93	0.09	14.17		280.27	78
202	120.14	0.1	14.32		280.191	78
203	119.27	0.11	14.23		280.259	78
204	118.41	0.09	14.32		280.381	78
205	117.66	0.1	14.45		280.503	78
206	116.79	0.09	14.34		280.927	78
207	115.94	0.05	14.9		283.965	78
208	114.93	0.03	16.08		282.508	78
209	114.10	0.04	15.22		281.557	78
210	113.32	0.04	15.37		281.481	78
211	112.41	0.04	14.6		284.036	78
212	111.62	0.04	15.46		286.07	78
213	110.55	0.04	16.04		287.462	78
214	109.55	0.04	15.92		288.537	78
215	108.68	0.05	16.18		286.932	78
216	107.85	0.04	15.7		286.264	78
217	106.89	0.04	15.9		285.221	78
218	106.11	0.04	15.32		286.287	78
219	105.09	0.04	15.68		285.587	78
220	104.17	0.04	15.69		286.164	78
221	103.26	0.04	16.16		285.161	78
222	102.34	0.04	15.87		284.484	78
223	101.54	0.03	10.01		285.756	78
224	100.63	0	1.38		285.64	78
225	99.62	0.04	15.01		287.268	78
226	98.76	0.06	16.93		286.611	78
227	97.95	0.04	16.81		284.094	78
228	97.12	0.05	16.57		278.557	78
229	96.29	0.06	14.79		282.825	78
230	95.38	0.04	15.86		282.886	78
231	94.36	0.04	15.58		285.276	78

232	93.47	0.04	16.41		287.059	78
233	92.52	0.04	16.41		286.673	78
234	91.71	0.04	16.36		286.14	78
235	90.74	0.04	15.87		287.838	78
236	89.89	0.04	16.51		286.411	78
237	89.06	0.04	15.91		285.17	78
238	88.26	0.04	15.54		284.147	78
239	87.32	0.04	14.99		283.6	78
240	86.82	0.04	14.85		285.536	78
241	85.89	0.04	15.02		285.635	78
242	85.19	0.03	14.88		285.71	78
243	84.33	0.03	15.1		286.011	78
244	83.52	0.03	15.31		287.116	78
245	82.56	0.03	15.58		287.944	78
246	82.17	0.03	16.01		286.464	78
247	81.22	0.02	15.26		287.271	77
248	80.37	0.03	15.89		287.437	77
249	79.67	0.03	15.64		285.242	77
250	78.89	0.03	14.84		286.921	77
251	78.12	0.03	15.48		286.357	77
252	77.17	0.03	15.39		288.05	77
253	76.35	0.03	16.1		286.965	78
254	75.58	0.03	15.75		285.993	78
255	74.85	0.03	15.29		285.426	78
256	73.90	0.03	16.29		284.733	78
257	73.10	0.03	15.25		283.361	78
258	72.34	0.04	16.12		283.225	78
259	71.86	0.04	16.32		283.007	78
260	70.89	0.04	15.42		283.564	78
261	70.30	0.01	2.56		282.825	78
262	69.37	0.05	16.19		282.769	78
263	68.69	0.04	15.68		282.195	78
264	67.89	0.04	15.64		281.397	78
265	67.58	0.04	16.13		281.68	78
266	66.60	0.04	16.21		284.458	78
267	65.23	0.04	16.36		285.365	78
268	64.46	0.04	15.71		284.022	78
269	62.92	0.04	15.15		281.392	78
270	62.96	0.06	15.99		282.693	78
271	62.57	0.05	16.74		282.622	78
272	61.54	0.06	16.81		283.043	78
273	61.18	0.05	15.42		283.36	78

274	59.77	0.04	15.55		283.091	78
275	59.22	0.06	16.56		284.502	78
276	58.55	0.05	16.51		284.559	78
277	57.77	0.05	16.49		284.134	78
278	57.05	0.05	15.49		283.254	78
279	56.30	0.04	14.81		284.34	78
280	55.54	0.04	14.82		285.673	78
281	54.86	0.05	15.78		270.214	78
282	54.60	0.05	12.95		248.948	78
283	54.18	1.69	16.49		236.781	78
284	53.87	2.99	15.7		228.342	78
285	53.69	5.2	15.66		220.955	78
286	53.39	2.56	15.29		214.455	78
287	53.16	1.59	14.84		209.432	78
288	53.09	1.42	13.22		205.713	78
289	53.07	1.12	12.19		202.358	78
290	52.93	0.94	11.68		200.67	78
291	52.82	0.57	9.5		199.36	78
292	52.82	1.82	8.71		197.332	78
293	52.78	3.01	9.62		194.881	78
294	52.72	3.58	9.78		192.169	78
295	52.71	3.84	9.72		189.416	78
297	52.71	3.76	8.96		189.416	78
298	52.83	3.61	8.57		186.75	77
299	52.72	3.37	7.96		184.21	77
300	52.74	3.22	7.64		181.68	77
301	52.86	1.43	4.17		179.204	77
302	52.58	2.3	6.85		173.566	77
303	52.70	2.2	7.78		173.311	78
304	52.71	2.17	7.51		172.01	78
305	52.71	2.13	7.06		170.492	78
306	52.69	2.08	6.68		168.652	78
307	52.67	2.08	6.43		166.813	78
308	52.70	3.92	11.93		165.005	78
309	52.48	2.4	10.15		175.383	78
310	51.90	2.16	9.74		190.166	78
311	51.46	2.13	9.93		202.237	78
312	51.01	2.28	10.32		209.81	78
313	50.50	2.25	11.07		214.654	78
314	49.96	1.58	12		218.441	78
315	49.49	1.43	12.18		223.153	78
316	48.95	1.16	12.27		228.13	78

317	48.46	0.97	12.32		232.451	77
318	47.90	0.89	12.22		235.247	78
319	47.43	0.84	12.3		237.76	78
320	46.92	0.81	12.45		239.622	78
321	46.47	0.59	12.83		241.175	77
322	46.08	0.35	13.37		242.982	78
323	45.39	0.11	13.74		244.958	78
324	44.90	0.05	14.19		246.961	77
325	44.43	0.04	14.66		248.955	78
326	43.99	0.04	15.26		249.318	78
327	43.05	0.07	15.5		249.087	77
328	41.66	0.08	15.59		248.543	77
329	41.09	0.08	15.7		248.579	77
330	40.81	0.06	15.52		248.541	77
331	40.23	0.06	15.74		248.87	77
332	39.68	0.06	15.57		249.193	78
333	39.84	0.05	15.55		250.191	78
334	38.93	0.05	15.5		250.653	77
335	37.93	0.05	15.55		251.322	77
336	37.61	0.05	15.61		251.174	77
337	36.51	0.05	15.52		251.381	77
338	36.08	0.05	15.7		250.928	77
339	35.18	0.05	15.57		251.984	77
340	35.06	0.05	15.57		253.998	77
341	34.25	0.05	15.6		255.81	77
342	33.61	0.05	15.57		258.141	77
343	33.13	0.05	15.57		259.823	77
344	32.48	0.05	15.53		260.126	77
345	31.85	0.05	15.44		259.069	77
346	31.21	0.05	15.37		258.181	77
347	30.67	0.05	15.28		257.47	77
348	30.16	0.05	15.25		256.969	77
349	29.67	0.05	15.13		256.747	77
350	29.02	0.04	15.01		255.834	77
351	28.72	0.04	14.93		257.596	77
352	28.03	0.04	14.86		258.924	77
353	27.45	0.04	14.63		258.749	77
354	26.92	0.04	14.52		260.352	77
355	26.42	0.04	14.19		262.314	77
356	25.91	0.04	14.19		263.359	77
357	25.32	0.03	14.12		263.918	77
358	24.81	0.04	14.06		264.702	77

359	24.42	0.04	14.11		265.133	77
360	23.97	0.06	13.99		265.814	77
361	23.34	0.03	14.46		265.88	77
362	22.86	0.04	14.44		266.128	77
363	22.32	0.03	14.24		266.586	77
364	21.88	0.04	14.06		266.882	77
365	21.51	0.03	14.31		266.898	77
366	20.98	0.03	14.17		266.695	77
367	20.48	0.03	14.1		266.771	77
368	19.91	0.03	14.12		266.837	77
369	19.50	0.04	14.15		266.747	77
370	18.99	0.04	14.18		266.887	77
371	18.57	0.04	14.07		267.228	77
372	18.18	0.05	14.15		267.26	77
373	17.78	0.06	14.16		267.6	77
374	17.38	0.07	14.17		268.067	77
375	16.84	0.07	14.37		268.205	77
376	16.45	0.04	14.98		268.263	77
377	16.10	0.04	14.8		269.369	77
378	15.41	0.05	14.61		270.275	77
379	14.88	0.07	14.58		269.912	77
380	14.71	0.06	14.61		269.656	77
381	14.19	0.08	14.4		269.837	77
382	13.67	0.11	14.39		269.51	77
383	13.13	0.13	14.23		269.226	77
384	12.72	0.22	14.13		268.895	77
385	12.43	0.28	14.04		268.271	77
386	11.97	0.3	13.9		267.902	77
387	11.70	0.17	14.08		267.307	77
388	11.22	0.3	14.04		267.698	77
389	10.64	0.31	14.23		268.431	77
390	10.31	0.25	14.3		268.851	77
391	10.04	0.46	14.09		269.065	77
392	9.40	0.62	13.91		269.11	77
393	9.10	0.73	13.69		269.302	77
394	8.55	0.78	13.6		269.12	77
395	8.18	1.02	13.15		267.983	77
396	7.87	1.14	12.94		266.575	77
397	7.35	1.24	12.92		265.436	77
398	6.87	0.26	14.32		264.949	77
399	6.53	0.38	13.97		266.555	77
400	6.41	0.59	13.65		268.317	77

401	5.93	0.89	13.5		268.253	77
402	5.63	1.04	13.41		267.465	77
403	5.16	1.32	12.95		266.884	77
404	4.72	1.96	12.28		266.22	77
405	4.43	2.26	11.87		265.235	77
406	4.01	1.87	12.28		264.032	77
407	3.60	1.26	13.04		262.784	77
408	3.08	1.24	12.85		263.367	77
409	2.71	1.52	12.45		263.75	77
410	2.44	1.87	12.02		263.71	76
411	2.06	2.45	11.47		263.733	76
412	1.66	2.74	11.16		263.024	76
413	1.23	2.82	10.98		262.353	76
414	0.98	3.26	10.44		262.313	77
415	0.57	2.56	10.83		261.503	77
416	0.18	2.7	10.44		260.183	77
417	0.13	3.04	10.19		258.793	77
418	0.04	3.38	9.84		257.607	77
419	0.04	3.39	10.25		256.3	77

OMNI-Test Laboratories, Inc.

ASTM E2618 Wood Heater Run Sheets

Client: Central Boiler Project Number: 0117WB Run Number: 1
Model: Edge 760 Tracking Number: 2383 Date: 8/7/19
Test Crew: B Davis
OMNI Equipment ID numbers:

Wood Heater Supplemental Data

Start Time: 19:34 Booth #:
Stop Time: 02:36

Stack Gas Leak Check:
Initial: good Final: good

Sample Train Leak Check:
A: 0.0 @ 10 "Hg
B: 0.0 @ 8 "Hg

Calibrations: Span Gas CO_2: 17.06 CO: 4.29

	Pre Test		Post Test	
	Zero	Span	Zero	Span
Time	1927	1930	0245	0249
CO_2	-0.00	17.02	0.01	17.08
CO	-0.00	4.28	0.003	4.29

Air Velocity (ft/min): Initial: <50 Final: <50
Scale Audit (lbs): Initial: 10.0 Final: 10.0
Pitot Tube Leak Test: Initial: good Final: good
Stack Diameter (in): 8"
Induced Draft: 0.0
% Smoke Capture: 100%
Flue Pipe Cleaned Prior to First Test in Series:
Date: 8/7/19 Initials: AL

	Initial	Middle	Ending
P_b (in/Hg)	30.02	29.98	29.97
RH (%)	57	46%	45%
Ambient (°F)	~~85~~ 77		~~83~~ 77

Background Filter Volume: ~~59,504~~ 62,500

Tunnel Traverse		
Microtector Reading	dP (in H_2O)	T(°F)
1	0.015	118
2	0.016	118
3	0.015	118
4	0.016	118
5	0.017	118
6	0.017	118
1	0.016	118
2	0.015	118
3	0.017	118
4	0.016	118
5	0.015	118
6	~~Center~~ 0.015	118
CENTER	0.017	118

Tunnel Static Pressure (in H_2O):	
Beginning of Test	End of Test
-.171	-.173

Technician Signature: Date: 10/21/19

OMNI-Test Laboratories, Inc.

ASTM E2618 Wood Heater Run Sheets

Client: Central Boiler Project Number: 0117WB Run Number: 1
Model: Edge 760 Tracking Number: 2383 Date: 8/7/19
Test Crew: B Daws
OMNI Equipment ID numbers:

Wood Heater Run Notes

Air Control Settings

Primary:

Automatic
Demand temp 165-145

Secondary: fixed

Tertiary/Pilot: N/A

Fan: Auto

Preburn Notes

Time	Notes
Ø	operated on high BTU draw entire test.

Test Notes

Sketch test fuel configuration:

See Photo

Start up procedures & Timeline:

Bypass: Not used
Fuel loaded by: 2.0 min
Door closed at: 2.0 min
Primary air: Auto

Notes:

Time	Notes
60	Changed front filter tray A.
21:25	- COOLED B FILTER
22:45	PPM READINGS STOPPED
23:10	CHANGED ALL 4 FILTERS DUE TO CONDENSATION PUMP COULD NOT vacuum m FILTERS MOIST - inside lab

Technician Signature: B D

Date: 10/28/19

Run 1
Proportional Rate verification

Test data was edited by changing recording interval from 1 minute to 10 minutes. This was done to demonstrate maximum data points outside of the 90 to 110 percent proportionate rate specification.

Hydronic Heating Appliances
Test Data

Run: 1

Manufacturer: Central Boiler
Model: Edge 760
Tracking No.: 2383
Project No.: 0117WB000E
Test Date: August 7, 2019
Technician: B. Davis
Beginning Clock Time: 19:34
Recording Interval: 10 min.
Total Sampling Time: 419 min.

Velocity Traverse Data	Pt.1	Pt.2	Pt.3	Pt.4	Pt.5	Pt.6	Pt.7	Pt.8	Pt.9	Pt.10	Pt.11	Pt.12	Center	
Initial dP	0.015	0.016	0.015	0.016	0.017	0.017	0.016	0.015	0.017	0.016	0.015	0.015	0.017	"H2O
Initial Temp.	118	118	118	118	118	118	118	118	118	118	118	118	118	oF

Air Velocity: Initial: <50 Final: <50
Scale Audit: Pre: 10.0 Post: 10.0 Induced Draft: 0
Pitot Tube Leak Test: Pre: 0 Post: 0 % Smoke Capture: 100
Flue Pipe Cleaned Prior to First Test in Series: Date:

V_{strav} 8.71 ft/sec
V_{scent} 9.03 ft/sec
F_p 0.965

PM Control Module: 335, 336
Dilution Tunnel MW(dry): 29.00 lb/lb-mole
Dilution Tunnel MW(wet): 28.78 lb/lb-mole
Dilution Tunnel H2O: 2.00 percent
Dilution Tunnel Static: -0.171 "H2O
Pitot Tube Cp: 0.99

	(1)	(2)	(amb)
Meter Box Y Factor:	1.009	0.99	1.001

Barometric Pressure:	Begin	Middle	End	Average
	30.02	29.98	29.97	29.99 "Hg

Tunnel Velocity: 8.46 ft/sec.
Intial Tunnel Flow: 355.6 scfm
Average Tunnel Flow: 357.7 scfm
Tunnel Area: 0.785 ft2
Post-Test Leak Check (1): cfm @ in. Hg
Post-Test Leak Check (2): cfm @ in. Hg
Fuel Moisture (dry basis %): #DIV/0!
Total Particulate (1): 18.4
Total Particulate (2): 17.1

Elapsed Time	Particulate Sampling Data: Gas Meter Cubic Feet (1)	Gas Meter Cubic Feet (2)	Gas Meter Cubic Feet (amb)	Sample Rate, cfm (1)	Sample Rate, cfm (2)	Orifice dH (1)	Orifice dH (2)	Orifice dH (amb)	Meter oF (1)	Meter oF (2)	Meter oF (amb)	Meter Vac. In. Hg. (1)	Meter Vac. In. Hg. (2)	Dilution Tunnel Temp.	Dilution Tunnel dP	Pro. Rate (%) (1)	Pro. Rate (%) (2)	Fuel Weight, lb: Scale Reading	Weight Change	Flow, gpm: Load Side Liquid Flow Rate	Boiler Side Liquid Flow Rate (optional)	Temperature Data, oF: Thermopile ΔT	Boiler to Heat Exch. Temp.	Heat Exch to Boiler Temp.	Inlet Load Temp.	Outlet Load Temp.	Stack	Filter (1)	Filter (2)	Ambient		Specific Heat of Inlet Water (BTU/lb-°F)	Mass Flow Rate of Inlet Water (lb/min)	Heat Output, Btu
0	0.000	0.000				1.11	0.98		83	82		1.93	1.40	115	0.017																			
10	1.578	1.605		0.16	0.16	1.31	1.06		83	83		1.99	1.50	119	0.017	99	99		0.00													1.001	0.000	0
20	3.157	3.196		0.16	0.16	1.30	1.03		85	84		2.01	1.60	119	0.017	99	98		0.00													1.001	0.000	0
30	4.755	4.783		0.16	0.16	1.35	1.03		86	85		2.07	1.70	120	0.016	103	101		0.00													1.001	0.000	0
40	6.359	6.372		0.16	0.16	1.33	1.06		87	87		2.10	1.90	120	0.015	107	104		0.00													1.001	0.000	0
50	7.961	7.975		0.16	0.16	1.33	1.07		88	87		2.11	1.90	121	0.016	103	101		0.00													1.001	0.000	0
60	9.562	9.591		0.16	0.16	1.32	1.06		89	88		2.13	1.90	121	0.016	103	102		0.00													1.001	0.000	0
70	11.178	11.212		0.16	0.16	1.35	1.09		89	89		2.11	1.90	122	0.016	104	102		0.00													1.001	0.000	0
80	12.791	12.847		0.16	0.16	1.34	1.09		90	89		2.12	1.90	121	0.016	103	103		0.00													1.001	0.000	0
90	14.402	14.479		0.16	0.16	1.34	1.09		90	90		2.11	1.80	121	0.017	100	99		0.00													1.001	0.000	0
100	16.012	16.115		0.16	0.16	1.33	1.08		91	90		2.14	1.90	122	0.016	103	103		0.00													1.001	0.000	0
110	17.622	17.751		0.16	0.16	1.33	1.08		91	90		2.17	1.90	123	0.016	103	103		0.00													1.001	0.000	0
120	19.231	19.384		0.16	0.16	1.33	1.08		91	91		2.15	1.90	121	0.016	103	102		0.00													1.001	0.000	0
130	20.836	21.011		0.16	0.16	1.31	1.06		92	91		2.18	1.90	123	0.017	100	99		0.00													1.001	0.000	0
140	22.435	22.628		0.16	0.16	1.32	1.06		92	91		2.20	1.90	123	0.017	99	99		0.00													1.001	0.000	0
150	24.031	24.231		0.16	0.16	1.30	1.03		92	91		2.23	2.00	123	0.017	99	98		0.00													1.001	0.000	0
160	25.648	25.821		0.16	0.16	1.36	1.01		92	91		2.28	2.10	123	0.016	103	100		0.00													1.001	0.000	0
170	27.261	27.407		0.16	0.16	1.29	1.06		92	91		2.49	2.50	124	0.016	103	100		0.00													1.001	0.000	0
180	28.843	29.000		0.16	0.16	1.27	1.00		92	91		2.51	2.80	123	0.016	101	100		0.00													1.001	0.000	0
190	30.433	30.561		0.16	0.16	1.32	1.02		92	91		2.63	3.80	123	0.016	102	98		0.00													1.001	0.000	0
200	32.041	32.166		0.16	0.16	1.33	1.15		92	91		2.62	3.80	123	0.016	103	101		0.00													1.001	0.000	0
210	33.512	33.875		0.15	0.17	0.35	1.11		92	91		7.26	2.70	123	0.013	104	119		0.00													1.001	0.000	0
220	34.211	35.368		0.07	0.15	0.08	1.10		91	91		14.50	4.90	124	0.017	44	91		0.00													1.001	0.000	0
230	35.025	36.475		0.08	0.11	1.17	0.45		91	91		1.72	9.20	123	0.016	52	70		0.00													1.001	0.000	0
240	36.611	37.824		0.16	0.13	1.37	1.09		92	91		2.13	1.60	123	0.016	101	85		0.00													1.001	0.000	0
250	38.244	39.457		0.16	0.16	1.37	1.07		92	91		2.14	1.60	123	0.016	104	103		0.00													1.001	0.000	0
260	39.876	41.075		0.16	0.16	1.36	1.06		92	91		2.13	1.70	121	0.017	101	98		0.00													1.001	0.000	0
270	41.499	42.675		0.16	0.16	1.34	1.03		92	91		2.19	1.70	120	0.016	104	100		0.00													1.001	0.000	0
280	43.113	44.266		0.16	0.16	1.33	1.02		92	91		2.18	1.80	121	0.016	103	100		0.00													1.001	0.000	0
290	44.731	45.857		0.16	0.16	1.34	1.02		92	91		2.13	1.70	86	0.017	97	94		0.00													1.001	0.000	0
300	46.358	47.471		0.16	0.16	1.35	1.07		92	91		2.08	1.60	83	0.016	100	98		0.00													1.001	0.000	0
310	47.991	49.110		0.16	0.16	1.36	1.08		91	91		2.11	1.60	101	0.016	103	101		0.00													1.001	0.000	0
320	49.624	50.753		0.16	0.16	1.37	1.09		91	91		2.09	1.60	111	0.016	104	102		0.00													1.001	0.000	0
330	51.255	52.391		0.16	0.16	1.36	1.09		91	91		2.13	1.60	111	0.015	107	105		0.00													1.001	0.000	0
340	52.881	54.024		0.16	0.16	1.37	1.07		91	91		2.12	1.70	113	0.016	103	102		0.00													1.001	0.000	0
350	54.508	55.651		0.16	0.16	1.35	1.08		91	90		2.12	1.70	113	0.017	100	99		0.00													1.001	0.000	0
360	56.132	57.279		0.16	0.16	1.36	1.08		91	90		2.15	1.70	116	0.016	103	102		0.00													1.001	0.000	0
370	57.753	58.905		0.16	0.16	1.35	1.07		91	90		2.16	1.70	117	0.015	107	105		0.00													1.001	0.000	0
380	59.373	60.530		0.16	0.16	1.34	1.07		91	90		2.17	1.70	117	0.016	103	102		0.00													1.001	0.000	0
390	60.991	62.155		0.16	0.16	1.34	1.08		91	90		2.15	1.70	117	0.015	107	105		0.00													1.001	0.000	0
400	62.609	63.786		0.16	0.16	1.33	1.09		91	90		2.19	1.60	116	0.016	103	102		0.00													1.001	0.000	0
410	64.224	65.428		0.16	0.16	1.33	1.09		91	90		2.17	1.60	115	0.014	110	110		0.00													1.001	0.000	0
419	65.676	66.908		0.15	0.15	1.32	1.09		91	90		2.18	1.60	114	0.016	103	103		0.00													1.001	0.000	0

Elapsed Time	Particulate Sampling Data																	Fuel Weight, lb		Flow, gpm		Temperature Data, oF												
	Gas Meter Cubic Feet (1)	Gas Meter Cubic Feet (2)	Gas Meter Cubic Feet (amb)	Sample Rate, cfm (1)	Sample Rate, cfm (2)	Orifice dH (1)	Orifice dH (2)	Orifice dH (amb)	Meter oF (1)	Meter oF (2)	Meter oF (amb)	Meter Vac. In. Hg. (1)	Meter Vac. In. Hg. (2)	Dilution Tunnel Temp.	Dilution Tunnel dP	Pro. Rate (%) (1)	Pro. Rate (%) (2)	Scale Reading	Weight Change	Load Side Liquid Flow Rate	Boiler Side Liquid Flow Rate (optional)	Thermopile ΔT	Boiler to Heat Exch. Temp.	Heat Exch to Boiler Temp.	Inlet Load Temp.	Outlet Load Temp.	Stack	Filter (1)	Filter (2)	Ambient		Specific Heat of Inlet Water (BTU/lb-°F)	Mass Flow Rate of Inlet Water (lb/min)	Heat Output, Btu
	65.676	66.908	0.000			1.27	1.05	#DIV/0!	90	90	#####			118	0.016						#DIV/0!	#DIV/0!	#DIV/0!	#DIV/0!	#DIV/0!	#DIV/0!	#DIV/0!	#DIV/0!		#DIV/0!			0
																														TOTAL:			0

TF_{avg}	0.000
TI_{avg}	0.000

Run 2

Hydronic Heating Appliances - Test Method ASTM 2618
Results

Manufacturer:	Central Boiler
Model:	Edge 760
Tracking No.:	2383
Project No.:	0117WB000E
Run:	2
Test Date:	August 8, 2019

Burn Rate	**6.64**	**kg/hr dry**
Average Tunnel Temperature	91	degrees F
Average Gas Velocity in Dilution Tunnel - vs	7.7	feet/second
Average Gas Flow Rate in Dilution Tunnel - Qsd	20569	dscf/hour
Average Delta p	0.016	inches H20
Average Delta H	1.32	inches H20
Total Time of Test	908	minutes

PARTICULATE EMISSIONS RESULTS

First Hour:	**1.52**	g/hr
	0.21	g/kg
	0.03	lb/mmBTU output
Complete Run:	**4.70**	g/hr
	0.71	g/kg
	0.10	lb/mmBTU output

	SAMPLE TRAIN 1		SAMPLE TRAIN 2		AMBIENT SAMPLE TRAIN	
Total Sample Volume - Vm	145.95	cubic feet	145.95	cubic feet	213.07	cubic feet
Average Gas Meter Temperature	89	degrees F	88	degrees F	76	degrees F
Total Sample Volume (Standard Conditions) - Vmstd	142.2	dscf	139.7	dscf	210.4	dscf
Total Particulates - mn	33.3	mg	31.2	mg	0.1	mg
Particulate Concentration (dry-standard)	0.00023	grams/dscf	0.00022	grams/dscf	0.000000	grams/dscf
Particulate Emissions	72.73	grams	69.39	grams		
Difference from Average	1.67	grams	1.67	grams		

Results Are Acceptable

	AVERAGE	
Total Sample Volume - Vm	145.95	cubic feet
Average Gas Meter Temperature	89	degrees F
Total Sample Volume (Standard Conditions) - Vmstd	141.0	dscf
Particulate Concentration (dry-standard)	0.00023	grams/dscf
Particulate Emissions	71.06	grams
7.5% of the average particulate emissions	5.33	grams

ADDITIONAL ACCEPTANCE CRITERIA

Boiler Water Return Temperature >120 °F	**Acceptable**
Proportional Rate Variation >80%	**Acceptable**
90% of PR Values between 90-110%	**Acceptable**

	SAMPLE TRAIN 1 - FIRST HOUR	
Total Sample Volume - Vm	9.60	cubic feet
Average Gas Meter Temperature	84	degrees F
Total Sample Volume (Standard Conditions) - Vmstd	9.43	dscf
Total Particulates - mn	0.7	mg
Particulate Concentration (dry-standard)	0.00007	grams/dscf
Particulate Emissions	1.52	grams
Burn Rate	7.32	(dry kg/hr)
Heat Output Rate	108493	BTU/hr

Hydronic Heating Appliances - Test Method ASTM 2618
Results

Manufacturer:	Central Boiler	Equipment Numbers:	
Model:	Edge 760		
Tracking No.:	2383		
Project No.:	0117WB000E		
Run #:	3		
Date:	8/13/19		

TRAIN 1 (First Hour emissions)

Sample Component	Reagent	Filter, Probe or Dish #	Weights		
			Final, mg	Tare, mg	Particulate, mg
B. Front filter catch	Filter	D872	118.7	118.7	0.0
C. Rear filter catch	Filter				0.0
D. Probe catch*	Probe				0.0
E. Filter seals catch*	Seals				0.0

Sub-Total	Total Particulate, mg:	0.0

TRAIN 1 (Post First Hour Change-out)

Sample Component	Reagent	Filter, Probe or Dish #	Weights		
			Final, mg	Tare, mg	Particulate, mg
B. Front filter catch	Filter	D873	130.1	118.0	12.1
C. Rear filter catch	Filter	D874, D878	252.5	238.5	14.0
D. Probe catch*	Probe	17	114562.7	114561.2	1.5
E. Filter seals catch*	Seals	R853	3623.0	3621.9	1.1

Sub-Total	Total Particulate, mg:	28.7
Train 1 Aggregate	Total Particulate, mg:	28.7

TRAIN 2

Sample Component	Reagent	Filter, Probe or Dish #	Weights		
			Final, mg	Tare, mg	Particulate, mg
A. Front filter catch	Filter	D875	131.7	118.0	13.7
B. Rear filter catch	Filter	D876, D879	251.4	238.3	13.1
C. Probe catch*	Probe	18	114403.2	114401.8	1.4
D. Filter seals catch*	Seals	R854	3351.7	3350.6	1.1

Total Particulate, mg:	29.3

AMBIENT

Sample Component	Reagent	Filter # or Probe #	Weights		
			Final, mg	Tare, mg	Particulate, mg
A. Front filter catch*	Filter	D877	119.1	119.0	0.1

Total Particulate, mg:	0.1

*Particulate catch that results in a negative number, is assumed to be zero for probes and seals, negative numbers for filters are assumed to be part of the seal weight.

Component	Equations:
A. Front filter catch	Final (mg) - Tare (mg) = Particulate, mg
B. Rear filter catch	Final (mg) - Tare (mg) = Particulate, mg
C. Probe catch	Final (mg) - Tare (mg) = Particulate, mg

Hydronic Heating Appliances - Test Method ASTM 2618
Fuel Moisture

Manufacturer:	Central Boiler
Model:	Edge 760
Tracking No.:	2383
Project No.:	0117WB000E
Technician:	B. Davis
Run #:	2
Test Date:	August 8, 2019

Wet Weight (lb)	% Moisture				
12.9	23.3	26.1	23.8	24.5	24.6
12.5	21.6	22.8	22.4	22.8	19.9
9.3	18.6	21	18.2	19.3	19.1
14.3	26.6	25.7	25.6	24.7	22.8
10.2	18.1	19	19.4	20.6	19.7
12.5	27.8	26.9	27.1	28	27.6
11.5	18	18.9	18.8	19.7	18
13.1	24.9	19.9	20	24.9	18.7
12.9	20.4	22.1	18.6	20.2	20.3
13.1	19.5	19.7	19.3	19.3	18.8
14.4	24.4	26	26.9	27	24.2
13.3	22.7	25.8	21.5	24.4	23.3
12	27.1	27.7	27.1	26.6	24.2
11.5	18.6	21.4	20.5	18.9	20.3
12.8	21.9	20.6	21.9	20.2	18.7
11.8	24.9	27.0	26.1	26.8	25.0
11.6	26.1	23.8	24.4	21.9	24.3
10.7	26.1	23.8	24.4	21.9	24.3
12.7	26.6	24.8	24.5	24.3	23.8
12.7	23.3	20.9	21.0	21.1	20.2
14.0	27.2	23.8	23.8	24.3	26.1
12.4	24.6	20.1	22.1	23.8	24.8

Total Weight of Load (lb): 272.2

Total Moisture of Load (%): 22.9

Equipment Numbers:

Hydronic Heating Appliances - Test Method ASTM 2618
Test Data

Run: 2

Manufacturer: Central Boiler
Model: Edge 760
Tracking No.: 2383
Project No.: 0117WB000E
Test Date: August 8, 2019
Technician: B. Davis
Beginning Clock Time: 16:31
Recording Interval: 1 min.
Total Sampling Time: 908 min.

Velocity Traverse Data

	Pt.1	Pt.2	Pt.3	Pt.4	Pt.5	Pt.6	Pt.7	Pt.8	Pt.9	Pt.10	Pt.11	Pt.12	Center	
Initial dP	0.010	0.014	0.016	0.015	0.016	0.016	0.016	0.017	0.015	0.016	0.012	0.010	0.017	"H2O
Initial Temp.	111	112	113	111	112	112	113	112	111	111	113	113	113	oF

Air Velocity: Initial: <50 Final: <50
Scale Audit: Pre: 10.0 Post: 10.0
Pitot Tube Leak Test: Pre: 0 Post: 0
Flue Pipe Cleaned Prior to First Test in Series: Date: 8/7/2019

Induced Draft: 0
% Smoke Capture: 100

V_{strav} 8.25 ft/sec
V_{scent} 9.00 ft/sec
F_p 0.917

PM Control Module: 335, 336
Dilution Tunnel MW(dry): 29.00 lb/lb-mole
Dilution Tunnel MW(wet): 28.78 lb/lb-mole
Dilution Tunnel H2O: 2.00 percent
Dilution Tunnel Static: -0.173 "H2O
Pitot Tube Cp: 0.99

	(1)	(2)	(amb)
Meter Box Y Factor:	1.009	0.99	1

Barometric Pressure:	Begin	Middle	End	Average	
	29.97	29.97	29.97	29.97	"Hg

Tunnel Velocity: 7.74 ft/sec.
Intial Tunnel Flow: 322.6 scfm
Average Tunnel Flow: 342.8 scfm
Tunnel Area: 0.785 ft2
Post-Test Leak Check (1): 0.002 cfm @ 10 in. Hg
Post-Test Leak Check (2): 0.003 cfm @ 8 in. Hg
Fuel Moisture (dry basis %): 22.9
Total Particulate (1): 33.3
Total Particulate (2): 31.2

Elapsed Time	Gas Meter Cubic Feet (1)	Gas Meter Cubic Feet (2)	Gas Meter Cubic Feet (amb)	Sample Rate, cfm (1)	Sample Rate, cfm (2)	Orifice dH (1)	Orifice dH (2)	Orifice dH (amb)	Meter oF (1)	Meter oF (2)	Meter oF (amb)	Meter Vac. In. Hg. (1)	Meter Vac. In. Hg. (2)	Dilution Tunnel Temp.	Dilution Tunnel dP	Pro. Rate (%) (1)	Pro. Rate (%) (2)	Fuel Weight, lb: Scale Reading	Fuel Weight, lb: Weight Change	Flow, gpm: Load Side Liquid Flow Rate	Flow, gpm: Boiler Side Liquid Flow Rate (optional)	Temperature, oF: Thermopile ΔT	Temperature, oF: Boiler to Heat Exch. Temp.	Temperature, oF: Heat Exch to Boiler Temp.	Temperature, oF: Inlet Load Temp.	Temperature, oF: Outlet Load Temp.	Temperature, oF: Stack	Temperature, oF: Filter (1)	Temperature, oF: Filter (2)	Temperature, oF: Ambient		Specific Heat of Inlet Water (BTU/lb-°F)	Mass Flow Rate of Inlet Water (lb/min)	Heat Output, Btu
0	0.000	0.000	0			0.42	0.65	0.35	81	80	75	1.91	1.1	107.00	0.017			272.2		2.28	15.3485451	101.2	169.7	155.2	67.7	168.9	247	77	76	75				
1	0.155	0.153		0.16	0.15	1.32	1.06	0.35	81	80	75	1.98	1.4	98	0.017	94	93	271.2	1.00	2.29	15.4219246	101.8	170.4	155.8	67.7	169.5	226.94214	77	77	75		1.001	19.019	1939
2	0.314	0.314		0.16	0.16	1.31	1.06	0.35	81	80	75	1.98	1.4	94	0.016	99	101	270.3	0.94	2.34	15.411871	102.3	171.0	156.3	67.8	170.1	214.99628	77	77	75		1.001	19.503	1997
3	0.473	0.475		0.16	0.16	1.32	1.05	0.35	81	81	75	2.03	1.5	105	0.017	97	98	269.2	1.07	2.27	15.4313507	102.9	171.6	156.9	67.8	170.7	233.34949	79	80	75		1.001	18.854	1943
4	0.632	0.635		0.16	0.16	1.32	1.06	0.35	81	81	75	2.04	1.5	111	0.017	98	98	268.3	0.87	2.32	15.4407949	102.6	171.1	156.8	67.8	170.4	246.57143	81	81	75		1.001	19.341	1987
5	0.791	0.796		0.16	0.16	1.32	1.06	0.35	81	81	75	2.01	1.5	110	0.015	104	105	267.5	0.80	2.21	15.3168983	102.7	171.0	157.3	67.7	170.5	248.53209	81	81	75		1.001	18.370	1889
6	0.949	0.957		0.16	0.16	1.32	1.06	0.35	81	81	75	2.02	1.5	111	0.015	103	105	266.8	0.73	2.23	15.3074131	102.9	171.3	157.4	67.8	170.7	250.87863	82	82	75		1.001	18.530	1909
7	1.108	1.117		0.16	0.16	1.31	1.06	0.35	82	81	75	2.01	1.5	112	0.017	98	98	266.2	0.57	2.19	15.3929014	103.4	171.8	157.7	67.8	171.2	252.10463	82	83	75		1.001	18.208	1885
8	1.266	1.277		0.16	0.16	1.31	1.05	0.35	82	81	75	2.02	1.5	113	0.015	103	105	265.5	0.73	2.23	15.4127121	103.9	172.3	158.2	67.8	171.7	253.72392	83	84	75		1.001	18.531	1928
9	1.424	1.437		0.16	0.16	1.3	1.05	0.35	82	81	75	2.01	1.5	113	0.017	97	98	264.7	0.84	2.25	15.5939522	104.4	172.8	158.7	67.8	172.2	255.5087	84	84	75		1.001	18.691	1954
10	1.582	1.596		0.16	0.16	1.3	1.04	0.35	82	81	75	2.02	1.5	113	0.016	100	101	263.9	0.71	2.27	15.4123335	105.1	173.5	159.2	67.8	172.8	255.44888	84	85	75		1.001	18.856	1984
11	1.740	1.755		0.16	0.16	1.34	1.08	0.35	82	81	75	2.06	1.5	111	0.016	100	101	263.2	0.70	2.15	15.3453922	105.8	174.0	160.3	67.7	173.5	254.52629	84	85	75		1.001	17.881	1894
12	1.900	1.917		0.16	0.16	1.33	1.07	0.35	82	81	76	2.07	1.5	114	0.017	99	100	262.6	0.64	2.09	15.3639097	106.4	174.6	161.0	67.7	174.1	256.70395	85	85	76		1.001	17.395	1853
13	2.059	2.077		0.16	0.16	1.32	1.06	0.35	82	81	76	2.06	1.5	114	0.015	104	105	261.7	0.87	2.03	15.3676233	107.0	175.2	161.6	67.7	174.7	258.98718	85	86	76		1.001	16.911	1811
14	2.218	2.238		0.16	0.16	1.33	1.06	0.35	82	81	75	2.06	1.5	113	0.016	101	102	260.9	0.85	2.11	15.3743639	107.5	175.8	162.0	67.7	175.3	258.80234	85	86	75		1.001	17.565	1891
15	2.377	2.398		0.16	0.16	1.33	1.06	0.35	82	82	75	2.05	1.6	113	0.017	98	98	260.1	0.82	2.11	15.3743906	108.1	176.4	162.6	67.7	175.9	258.60239	85	86	75		1.001	17.556	1901
16	2.536	2.558		0.16	0.16	1.33	1.05	0.35	83	82	75	2.06	1.6	113	0.015	104	105	259.6	0.44	2.09	15.331975	108.6	176.9	163.0	67.7	176.4	258.52051	85	86	75		1.001	17.396	1892
17	2.695	2.718		0.16	0.16	1.33	1.05	0.35	83	82	76	2.06	1.6	113	0.018	95	96	258.8	0.79	2.09	15.2976332	109.3	177.6	163.6	67.8	177.1	259.04453	85	86	76		1.001	17.394	1904
18	2.854	2.878		0.16	0.16	1.32	1.05	0.35	83	82	76	2.04	1.6	113	0.014	108	108	258.1	0.71	2.03	15.3928671	109.8	178.1	164.0	67.8	177.6	259.37466	86	86	76		1.001	16.913	1859
19	3.014	3.037		0.16	0.16	1.32	1.05	0.35	83	82	76	2.07	1.6	113	0.017	98	98	257.3	0.83	2.09	15.3330564	110.4	178.8	164.7	67.8	178.2	259.23087	86	86	76		1.001	17.371	1921
20	3.173	3.196		0.16	0.16	1.32	1.05	0.35	83	82	76	2.03	1.6	114	0.016	101	101	256.6	0.66	2.12	15.3873758	110.9	179.3	165.0	67.8	178.7	260.17059	86	86	76		1.001	17.670	1962
21	3.332	3.356		0.16	0.16	1.31	1.05	0.35	83	83	76	2.04	1.6	113	0.013	112	112	255.8	0.82	2.05	15.4123154	111.3	179.7	165.5	67.8	179.2	259.71259	86	86	76		1.001	17.028	1898
22	3.490	3.515		0.16	0.16	1.31	1.04	0.35	83	83	76	2.07	1.6	114	0.016	100	101	255.2	0.61	2.14	15.3453722	112.0	180.4	166.1	67.8	179.8	260.78275	86	87	76		1.001	17.793	1995
23	3.649	3.673		0.16	0.16	1.32	1.04	0.35	84	83	76	2.06	1.6	115	0.017	98	97	254.5	0.71	2.12	15.5169535	112.4	180.8	166.5	67.8	180.3	262.26312	86	87	76		1.001	17.607	1982
24	3.808	3.833		0.16	0.16	1.32	1.04	0.35	84	83	76	2.03	1.6	115	0.017	98	98	253.8	0.71	2.14	15.4221449	112.9	181.3	166.9	67.9	180.8	262.45725	86	87	76		1.001	17.813	2014
25	3.966	3.991		0.16	0.16	1.32	1.04	0.35	84	83	76	2.05	1.6	108	0.013	110	110	253.1	0.67	2.12	15.3359585	113.5	181.9	167.4	67.9	181.4	255.76228	85	85	76		1.001	17.621	2002
26	4.126	4.151		0.16	0.16	1.32	1.04	0.35	84	83	76	2.02	1.6	94	0.016	99	99	252.8	0.29	2.11	15.4110489	113.9	182.3	167.7	67.9	181.8	236.13449	83	83	76		1.001	17.556	2002
27	4.285	4.310		0.16	0.16	1.32	1.02	0.35	84	83	76	2.02	1.6	90	0.015	102	102	252.6	0.23	1.77	15.3166142	114.4	182.6	170.4	67.9	182.3	224.73914	82	82	76		1.001	14.772	1692
28	4.445	4.468		0.16	0.16	1.32	1.03	0.35	84	84	76	2.02	1.6	87	0.016	99	97	252.4	0.19	1.90	15.3837671	114.3	182.6	170.2	67.9	182.3	217.47585	81	81	76		1.001	15.774	1806
29	4.605	4.628		0.16	0.16	1.32	1.03	0.35	84	84	76	2.02	1.6	87	0.016	99	99	252.5	-0.03	1.87	15.4220276	114.1	182.4	169.7	67.9	182.0	211.07433	80	82	76		1.001	15.601	1782
30	4.765	4.787		0.16	0.16	1.32	1.04	0.35	85	84	76	2.01	1.6	86	0.015	102	101	252.4	0.08	1.89	15.4122677	113.9	182.1	169.4	68.0	181.8	205.5901	80	81	76		1.001	15.766	1797
31	4.926	4.947		0.16	0.16	1.32	1.04	0.35	85	84	76	2.04	1.6	85	0.015	102	102	252.4	-0.04	1.91	15.4123402	113.6	181.9	169.2	68.0	181.6	201.06223	80	80	76		1.001	15.933	1812
32	5.086	5.107		0.16	0.16	1.32	1.03	0.35	85	84	76	2.01	1.6	85	0.015	102	102	252.1	0.26	1.90	15.421999	113.4	181.7	169.0	68.0	181.4	197.60895	79	80	76		1.001	15.772	1790
33	5.246	5.266		0.16	0.16	1.32	1.03	0.35	85	84	76	2.04	1.6	84	0.017	95	95	252.2	-0.10	1.86	15.3920069	113.1	181.4	168.8	68.0	181.1	194.40041	78	79	76		1.001	15.448	1749
34	5.406	5.426		0.16	0.16	1.32	1.04	0.35	85	85	76	2.01	1.5	83	0.015	101	101	252.1	0.10	1.88	15.3871031	112.8	181.1	168.5	68.1	180.8	192.29646	78	78	76		1.001	15.611	1762
35	5.566	5.588		0.16	0.16	1.32	1.05	0.35	85	85	76	2.01	1.5	82	0.015	101	102	252.2	-0.04	1.84	15.3762722	112.5	180.9	168.3	68.1	180.6	191.09656	77	78	76		1.001	15.289	1722
36	5.727	5.748		0.16	0.16	1.32	1.05	0.35	85	85	76	2.02	1.5	82	0.015	102	101	252.3	-0.16	1.88	15.3837881	112.2	180.6	168.0	68.1	180.3	189.14304	77	77	76		1.001	15.616	1754
37	5.887	5.909		0.16	0.16	1.33	1.05	0.35	86	85	76	1.99	1.5	82	0.015	101	102	252.2	0.18	1.93	15.421895	111.9	180.3	167.8	68.1	180.0	186.86557	76	77	76		1.001	16.098	1803
38	6.048	6.070		0.16	0.16	1.33	1.06	0.35	86	85	76	2.03	1.5	82	0.017	96	96	252.2	-0.08	1.88	15.3650808	111.6	180.0	167.5	68.1	179.7	184.48776	76	77	76		1.001	15.611	1744
39	6.209	6.232		0.16	0.16	1.33	1.06	0.35	86	85	76	2	1.5	82	0.015	102	102	252.2	0.07	1.84	15.3464193	111.3	179.7	167.2	68.2	179.4	181.99764	76	77	76		1.001	15.288	1703
40	6.370	6.393		0.16	0.16	1.33	1.06	0.35	86	85	76	1.99	1.5	81	0.016	98	99	252.1	0.08	1.88	15.3838034	110.9	179.4	167.0	68.2	179.1	179.51453	76	77	76		1.001	15.612	1734
41	6.530	6.555		0.16	0.16	1.33	1.06	0.35	86	85	76	2	1.5	81	0.016	98	99	252.2	-0.07	1.90	15.3795176	110.6	179.1	166.3	68.2	178.8	177.09045	76	77	76		1.001	15.776	1746
42	6.691	6.717		0.16	0.16	1.33	1.07	0.35	86	85	76	2	1.5	81	0.016	98	99	252.1	0.04	1.91	15.3956051	110.2	178.7	166.0	68.2	178.4	174.84247	76	77	76		1.001	15.937	1758
43	6.852	6.881		0.16	0.16	1.33	1.06	0.35	86	86	76	1.99	1.5	81	0.016	98	100	252.1	0.03	1.95	15.3168831	109.8	178.3	165.7	68.2	178.0	172.65523	76	77	76		1.001	16.257	1787
44	7.013	7.042		0.16	0.16	1.33	1.07	0.35	86	86	76	2.01	1.5	81	0.015	102	102	252.2	-0.06	1.91	15.3928671	109.4	178.0	165.3	68.2	177.7	170.67079	76	77	76		1.001	15.936	1746
45	7.175	7.205		0.16	0.16	1.33	1.07	0.35	86	86	76	2.03	1.5	81	0.015	102	103	252.1	0.07	1.90	15.3456125	109.1	177.7	165.1	68.2	177.4	168.66765	76	77	76		1.001	15.775	1723
46	7.336	7.368		0.16	0.16	1.33	1.07	0.35	86	86	76	1.99	1.5	81	0.016	98	100	252.2	-0.15	1.86	15.3743792	108.7	177.3	164.8	68.3	177.0	166.72446	76	77	76		1.001	15.448	1682
47	7.497	7.531		0.16	0.16	1.33	1.08	0.35	87	86	76	1.99	1.5	81	0.014	105	106	252.3	-0.06	2.01	15.4218121	108.3	176.9	164.0	68.3	176.5	164.84114	76	77	76		1.001	16.734	1814
48	7.658	7.694		0.16	0.16	1.33	1.07	0.35	87	86	76	1.98	1.5	81	0.016	98	100	252.1	0.20	2.14	15.4233646	107.8	176.5	162.8	68.3	176.1	163.17578	76	77	76		1.001	17.811	1922
49	7.819	7.857		0.16	0.16	1.34	1.07	0.35	87	86	76	2.01	1.5	81	0.016	98	100	252.3	-0.21	1.90	15.4309225	107.3	176.0	162.7	68.3	175.6	161.41487	76	77	76		1.001	15.819	1700

Elapsed Time	Particulate Sampling Data																		Fuel Weight, lb		Flow, gpm		Temperature Data, oF												
	Gas Meter Cubic Feet (1)	Gas Meter Cubic Feet (2)	Gas Meter Cubic Feet (amb)	Sample Rate, cfm (1)	Sample Rate, cfm (2)	Orifice dH (1)	Orifice dH (2)	Orifice dH (amb)	Meter oF (1)	Meter oF (2)	Meter oF (amb)	Meter Vac. In. Hg. (1)	Meter Vac. In. Hg. (2)	Dilution Tunnel Temp.	Dilution Tunnel dP	Pro. Rate (%) (1)	Pro. Rate (%) (2)	Scale Reading	Weight Change	Load Side Liquid Flow Rate	Boiler Side Liquid Flow Rate (optional)	Thermopile ΔT	Boiler to Heat Exch. Temp.	Heat Exch to Boiler Temp.	Inlet Load Temp.	Outlet Load Temp.	Stack	Filter (1)	Filter (2)	Ambient		Specific Heat of Inlet Water (BTU/lb-°F)	Mass Flow Rate of Inlet Water (lb/min)	Heat Output, Btu
50	7.981	8.020		0.16	0.16	1.34	1.07	0.35	87	86	76	1.98	1.5	81	0.014	106	106	252.2	0.09	2.07	15.498188	106.9	175.7	162.1	68.3	175.3	159.77303	76	77	76		1.001	17.255	1847
51	8.142	8.183		0.16	0.16	1.34	1.08	0.35	87	86	76	2.01	1.5	81	0.015	102	103	252.3	-0.10	2.11	15.4716263	106.5	175.2	161.7	68.3	174.8	158.19832	77	77	76		1.001	17.536	1870
52	8.304	8.347		0.16	0.16	1.34	1.07	0.35	87	86	76	1.97	1.5	81	0.015	102	103	252.3	0.05	2.13	15.3838129	106.1	174.9	161.6	68.3	174.5	156.64128	77	77	76		1.001	17.705	1881
53	8.465	8.510		0.16	0.16	1.34	1.08	0.35	87	87	76	2	1.5	81	0.014	105	106	252.2	0.08	2.11	15.431344	105.7	174.4	161.0	68.3	174.0	155.30457	77	77	76		1.001	17.550	1856
54	8.627	8.673		0.16	0.16	1.34	1.07	0.35	87	87	76	1.99	1.5	81	0.015	102	103	252.1	0.06	2.14	15.4314728	105.3	174.0	160.7	68.3	173.6	153.78905	77	77	76		1.001	17.827	1880
55	8.788	8.836		0.16	0.16	1.34	1.07	0.35	87	87	77	1.98	1.5	81	0.016	98	99	252.3	-0.12	2.13	15.3973179	104.8	173.5	160.1	68.3	173.1	152.39583	77	77	77		1.001	17.696	1857
56	8.950	8.999		0.16	0.16	1.34	1.08	0.35	87	87	77	2	1.5	81	0.014	106	106	252.3	-0.08	2.15	15.4024878	104.4	173.0	159.8	68.3	172.7	151.07095	77	77	77		1.001	17.862	1867
57	9.112	9.163		0.16	0.16	1.34	1.08	0.35	87	87	77	1.97	1.5	81	0.016	99	100	252.3	0.06	2.13	15.4605207	103.9	172.5	159.4	68.2	172.1	149.69345	77	77	77		1.001	17.723	1843
58	9.273	9.327		0.16	0.16	1.34	1.07	0.35	88	87	77	1.99	1.5	81	0.015	101	103	252.3	-0.04	2.15	15.4693232	103.5	172.1	159.1	68.3	171.7	148.46739	77	77	77		1.001	17.871	1851
59	9.435	9.490		0.16	0.16	1.34	1.07	0.35	88	87	77	1.97	1.5	81	0.016	99	99	252.4	-0.07	2.15	15.4220591	103.0	171.7	158.6	68.3	171.3	147.16551	77	78	77		1.001	17.869	1843
60	9.597	9.653		0.16	0.16	1.34	1.08	0.35	88	87	77	1.97	1.5	81	0.015	102	103	252.4	0.01	2.17	15.3744602	102.5	171.2	158.2	68.3	170.8	145.91951	77	78	77		1.001	18.033	1850
61	9.760	9.816		0.16	0.16	1.4	1.08	0.35	88	87	77	1.84	1.5	81	0.017	96	96	252.4	0.00	2.09	15.3642769	102.0	170.7	157.9	68.4	170.3	144.77399	77	78	77		1.001	17.389	1775
62	9.923	9.979		0.16	0.16	1.34	1.08	0.35	88	87	77	1.97	1.5	81	0.016	99	99	252.3	0.01	2.13	15.4407682	101.5	170.2	157.5	68.4	169.9	143.66107	79	78	77		1.001	17.712	1800
63	10.085	10.144		0.16	0.17	1.34	1.08	0.35	88	87	77	2	1.5	81	0.014	106	108	252.4	-0.04	2.11	15.3553371	101.1	169.9	157.1	68.4	169.4	142.50325	80	78	77		1.001	17.547	1776
64	10.247	10.307		0.16	0.16	1.35	1.07	0.35	88	87	77	1.96	1.5	81	0.016	99	99	252.4	-0.04	2.15	15.4986591	100.5	169.3	156.6	68.4	168.9	141.55696	80	78	77		1.001	17.869	1799
65	10.410	10.470		0.16	0.16	1.35	1.08	0.35	88	87	77	1.97	1.5	80	0.015	102	103	252.5	-0.08	2.13	15.3680668	100.1	168.9	156.2	68.4	168.5	140.64978	79	78	77		1.001	17.709	1775
66	10.572	10.633		0.16	0.16	1.34	1.07	0.35	88	88	77	1.97	1.5	81	0.017	96	96	252.4	0.15	2.09	15.3838167	99.5	168.3	155.6	68.3	167.9	139.70242	79	78	77		1.001	17.389	1733
67	10.734	10.797		0.16	0.16	1.34	1.08	0.35	88	88	77	1.98	1.5	80	0.015	102	103	252.5	-0.15	2.15	15.4306116	99.3	167.9	155.3	68.3	167.6	138.63681	79	78	77		1.001	17.870	1776
68	10.896	10.961		0.16	0.16	1.34	1.08	0.35	88	88	77	1.96	1.5	80	0.017	96	97	252.5	0.03	2.17	15.3545256	98.8	167.5	154.9	68.3	167.1	137.77647	79	78	77		1.001	18.034	1784
69	11.059	11.124		0.16	0.16	1.34	1.08	0.35	88	88	77	1.98	1.5	80	0.016	99	99	252.4	0.04	2.09	15.364912	98.3	166.9	154.4	68.2	166.5	136.9592	79	78	77		1.001	17.387	1711
70	11.222	11.288		0.16	0.16	1.35	1.07	0.35	88	88	77	1.96	1.5	80	0.016	99	100	252.6	-0.17	2.19	15.375411	97.8	166.4	154.0	68.2	166.0	136.01917	79	78	77		1.001	18.196	1782
71	11.384	11.451		0.16	0.16	1.34	1.07	0.35	88	88	77	1.97	1.5	80	0.016	99	99	252.4	0.23	2.11	15.363905	97.4	166.0	153.6	68.2	165.6	135.38945	79	78	77		1.001	17.548	1712
72	11.547	11.614		0.16	0.16	1.34	1.08	0.35	89	88	77	1.97	1.5	80	0.016	99	99	252.6	-0.20	2.13	15.4081621	97.0	165.6	153.3	68.2	165.2	134.63286	79	78	77		1.001	17.708	1720
73	11.709	11.778		0.16	0.16	1.34	1.08	0.35	89	88	77	1.97	1.5	79	0.018	93	94	252.5	0.10	2.11	15.4361353	96.5	165.1	152.8	68.2	164.7	133.77525	79	78	77		1.001	17.548	1696
74	11.872	11.942		0.16	0.16	1.35	1.08	0.35	89	88	77	1.98	1.5	79	0.017	96	97	252.5	-0.07	2.09	15.440793	96.1	164.7	152.5	68.2	164.3	132.73116	79	78	77		1.001	17.388	1673
75	12.034	12.106		0.16	0.16	1.35	1.08	0.35	89	88	77	1.97	1.5	79	0.015	102	103	252.6	-0.04	2.07	15.355154	95.6	164.2	152.0	68.2	163.8	132.05685	79	78	77		1.001	17.225	1649
76	12.197	12.269		0.16	0.16	1.34	1.07	0.35	89	88	77	1.96	1.5	79	0.014	106	106	252.4	0.18	2.13	15.4509697	95.2	163.8	151.5	68.2	163.4	131.40619	78	78	77		1.001	17.709	1687
77	12.360	12.432		0.16	0.16	1.35	1.08	0.35	89	88	77	1.96	1.50	79	0.015	102	102	252.6	-0.15	2.11	15.3929195	94.7	163.3	151.1	68.2	162.9	130.68089	78	78	77		1.001	17.548	1663
78	12.522	12.596		0.16	0.16	1.34	1.08	0.35	89	88	77	1.97	1.50	79	0.016	98	100	252.5	0.01	2.11	15.5170116	94.3	162.9	150.8	68.2	162.5	130.01601	78	78	77		1.001	17.549	1656
79	12.685	12.760		0.16	0.16	1.35	1.08	0.35	89	88	77	1.97	1.50	79	0.015	102	103	252.4	0.10	2.09	15.478981	93.8	162.4	150.3	68.2	162.0	129.28423	78	78	77		1.001	17.387	1632
80	12.847	12.924		0.16	0.16	1.35	1.08	0.35	89	88	77	1.96	1.50	80	0.016	98	100	252.5	-0.03	2.17	15.4217415	93.3	161.9	150.0	68.2	161.5	138.537	78	78	77		1.001	18.033	1684
81	13.009	13.087		0.16	0.16	1.34	1.06	0.35	89	88	77	1.98	1.50	92	0.017	97	97	252.0	0.45	2.17	15.385726	92.8	161.4	149.4	68.2	161.0	164.90561	80	79	77		1.001	18.036	1676
82	13.171	13.249		0.16	0.16	1.35	1.07	0.35	89	89	77	1.99	1.50	94	0.016	100	100	251.2	0.87	2.13	15.5259094	92.3	161.0	148.8	68.2	160.5	181.73361	80	80	77		1.001	17.709	1636
83	13.334	13.412		0.16	0.16	1.35	1.08	0.35	89	89	77	1.98	1.50	97	0.015	104	104	250.5	0.62	2.24	15.3887272	91.9	160.6	148.3	68.2	160.1	200.61122	80	80	77		1.001	18.682	1718
84	13.496	13.575		0.16	0.16	1.36	1.08	0.35	89	89	77	1.99	1.50	101	0.016	100	101	249.9	0.64	2.22	15.4508886	91.8	160.6	148.3	68.2	160.0	215.64548	81	81	77		1.001	18.515	1702
85	13.658	13.738		0.16	0.16	1.35	1.08	0.35	89	89	77	2.00	1.50	104	0.017	98	98	248.9	1.02	2.26	15.3455133	92.2	160.9	148.6	68.2	160.4	227.94286	82	82	77		1.001	18.841	1739
86	13.820	13.899		0.16	0.16	1.35	1.08	0.35	89	89	77	1.99	1.50	107	0.016	101	100	248.2	0.68	2.23	15.4408426	92.6	161.3	148.9	68.2	160.8	237.38022	82	83	77		1.001	18.519	1716
87	13.981	14.062		0.16	0.16	1.36	1.08	0.35	89	89	77	2.01	1.50	109	0.016	100	102	247.2	1.01	2.24	15.4094486	93.0	161.7	149.3	68.2	161.2	242.82153	83	83	77		1.001	18.681	1739
88	14.143	14.224		0.16	0.16	1.35	1.08	0.35	89	89	77	1.99	1.50	109	0.016	101	101	246.3	0.85	2.26	15.4696293	93.4	162.2	149.6	68.2	161.7	244.01424	84	84	77		1.001	18.839	1762
89	14.305	14.387		0.16	0.16	1.35	1.07	0.35	90	89	77	2.01	1.50	109	0.017	98	99	245.5	0.87	2.23	15.4022894	93.8	162.6	150.0	68.2	162.0	246.51659	84	85	77		1.001	18.518	1739
90	14.466	14.549		0.16	0.16	1.35	1.06	0.35	90	89	77	2.02	1.50	110	0.016	100	101	244.5	0.93	2.17	15.4314251	94.3	163.1	150.4	68.2	162.5	246.41745	85	85	77		1.001	18.034	1702
91	14.628	14.710		0.16	0.16	1.35	1.07	0.35	90	89	77	2.00	1.50	109	0.016	101	100	243.7	0.82	2.17	15.3744173	94.7	163.4	150.7	68.2	162.9	246.20338	85	85	77		1.001	18.028	1709
92	14.789	14.872		0.16	0.16	1.34	1.07	0.35	90	89	77	2.02	1.50	109	0.015	104	104	243.0	0.76	2.24	15.4222221	95.2	164.0	151.1	68.2	163.4	246.57967	85	86	77		1.001	18.679	1780
93	14.951	15.034		0.16	0.16	1.34	1.06	0.35	90	89	77	2.02	1.50	109	0.017	98	98	242.0	0.93	2.30	15.4026299	95.7	164.5	151.5	68.2	163.9	248.22159	86	86	77		1.001	19.164	1835
94	15.112	15.195		0.16	0.16	1.34	1.06	0.35	90	89	77	2.02	1.60	110	0.017	97	97	241.2	0.78	2.19	15.4124193	96.3	165.1	152.1	68.2	164.5	250.21475	86	86	77		1.001	18.195	1753
95	15.273	15.356		0.16	0.16	1.33	1.06	0.35	90	89	77	2.02	1.60	110	0.015	104	104	240.4	0.81	2.26	15.4218388	96.8	165.7	152.5	68.2	165.0	251.13141	86	87	77		1.001	18.842	1826
96	15.434	15.517		0.16	0.16	1.33	1.06	0.35	90	89	77	2.03	1.60	111	0.017	97	97	239.6	0.80	2.19	15.4123373	97.4	166.2	153.0	68.2	165.6	251.27528	87	87	77		1.001	18.194	1774
97	15.595	15.678		0.16	0.16	1.34	1.05	0.35	90	89	77	2.03	1.60	111	0.017	97	97	238.8	0.81	2.26	15.3639526	97.8	166.6	153.4	68.2	166.0	251.21143	87	87	77		1.001	18.842	1844
98	15.756	15.839		0.16	0.16	1.33	1.05	0.35	90	89	77	2.02	1.60	110	0.017	97	97	238.1	0.70	2.26	15.3639479	98.5	167.4	154.0	68.3	166.7	250.23756	87	87	77		1.001	18.838	1857
99	15.917	15.999		0.16	0.16	1.33	1.05	0.35	90	89	77	2.02	1.60	110	0.016	100	100	237.1	0.97	2.26	15.4693203	99.0	167.9	154.4	68.3	167.3	251.4673	87	87	77		1.001	18.839	1867
100	16.078	16.160		0.16	0.16	1.34	1.05	0.35	90	89	77	2.03	1.60	110	0.017	97	97	236.4	0.70	2.22	15.4892149	99.5	168.5	154.9	68.3	167.8	252.03375	87	87	77		1.001	18.517	1845
101	16.239	16.320		0.16	0.16	1.33	1.04	0.35	90	89	77	2.03	1.60	111	0.016	100	100	235.6	0.89	2.19	15.469305	100.1	169.1	155.4	68.3	168.4	254.12021	87	87	77		1.001	18.197	1824
102	16.400	16.480		0.16	0.16	1.33	1.04	0.35	90	89	76	2.03	1.60	111	0.015	104	103	234.8	0.77	2.26	15.3359337	100.5	169.4	155.8	68.3	168.8	255.11253	87	88	76		1.001	18.845	1897
103	16.561	16.641		0.16	0.16	1.32	1.04	0.35	90	89	76	2.04	1.60	112	0.018	95	95	234.1	0.70	2.28	15.3643217	101.2	170.1	156.4	68.3	169.4	255.9828	87	88	76		1.001	19.010	1925
104	16.722	16.799		0.16	0.16	1.33	1.02	0.35	90	89	76	2.03	1.60	112	0.017	98	96	233.3	0.83	2.26	15.4054804	101.7	170.7	156.8	68.3	170.0	255.87686	87	88	76		1.001	18.849	1920
105	16.883	16.957		0.16	0.16	1.32	1.03	0.35	90	89	76	2.04	1.60	112	0.016	101	99	232.4	0.82	2.21	15.3452997	102.3	171.2	157.4	68.3	170.6	255.58943	87	88	76		1.001	18.358	1881
106	17.043	17.117		0.16	0.16	1.33	1.03	0.35	90	89	77	2.03	1.60	111	0.017	97	97	231.8	0.61	2.17	15.4023256	102.9	171.8	157.8	68.3	171.1	255.54213	87	87	77		1.001	18.037	1857
107	17.204	17.275		0.16	0.16	1.33	1.02	0.35	90	89	77	2.05	1.60	111	0.017	97	96	231.0	0.84	2.24	15.3456964	103.5	172.4	158.4	68.3	171.8	255.76108	87	87	77		1.001	18.683	1936
108	17.365	17.434		0.16	0.16	1.32	1.02	0.35	90	89	77	2.05	1.60	111	0.016	100	99	230.2	0.82	2.30	15.383853	103.9	172.8	158.9	68.3	172.2	255.88924	87	87	77		1.001	19.168	1994
109	17.525	17.591		0.16	0.16	1.32	1.02	0.35	90	89	77	2.04	1.70	111	0.017	97	95	229.5	0.66	2.19	15.4114971	104.5	173.5	159.3	68.3	172.8	256.93869	87	87	77		1.001	18.195	1904
110	17.686	17.749		0.16	0.16	1.32	1.01	0.35	90	89	77	2.03	1.70	111	0.014	107	105	228.7	0.81	2.24	15.4568605	105.0	174.0	159.8	68.3	173.3	257.05756	87	87	77		1.001	18.678	1964
111	17.847	17.907		0.16	0.16	1.31	1.01	0.35	90	89	77	2.04	1.70	111	0.015	104	102	228.0	0.70	2.19	15.3360691	105.6	174.5	160.4	68.3	173.9	257.36063	87	87	77		1.001	18.200	1924

Elapsed Time	Particulate Sampling Data																	Fuel Weight, lb		Flow, gpm		Temperature Data, oF												
	Gas Meter Cubic Feet (1)	Gas Meter Cubic Feet (2)	Gas Meter Cubic Feet (amb)	Sample Rate, cfm (1)	Sample Rate, cfm (2)	Orifice dH (1)	Orifice dH (2)	Orifice dH (amb)	Meter oF (1)	Meter oF (2)	Meter oF (amb)	Meter Vac. In. Hg. (1)	Meter Vac. In. Hg. (2)	Dilution Tunnel Temp.	Dilution Tunnel dP	Pro. Rate (%) (1)	Pro. Rate (%) (2)	Scale Reading	Weight Change	Load Side Liquid Flow Rate	Boiler Side Liquid Flow Rate (optional)	Thermopile ΔT	Boiler to Heat Exch. Temp.	Heat Exch to Boiler Temp.	Inlet Load Temp.	Outlet Load Temp.	Stack	Filter (1)	Filter (2)	Ambient		Specific Heat of Inlet Water (BTU/lb-°F)	Mass Flow Rate of Inlet Water (lb/min)	Heat Output, Btu
112	18.007	18.064		0.16	0.16	1.32	1.01	0.35	90	90	77	2.06	1.70	111	0.015	103	101	227.2	0.82	2.09	15.383873	106.2	175.1	161.0	68.3	174.5	257.57013	87	87	77		1.001	17.391	1850
113	18.167	18.222		0.16	0.16	1.32	1.01	0.35	90	90	77	2.04	1.70	111	0.016	100	98	226.4	0.72	2.24	15.4123354	106.7	175.6	161.3	68.3	174.9	257.68634	87	87	77		1.001	18.675	1994
114	18.328	18.380		0.16	0.16	1.33	1.14	0.35	90	90	77	2.06	1.90	111	0.016	100	98	225.6	0.85	2.13	15.4403667	107.2	176.1	161.8	68.3	175.5	258.76285	87	87	77		1.001	17.704	1900
115	18.488	18.542		0.16	0.16	1.31	1.07	0.35	90	90	77	2.06	1.70	112	0.017	97	98	225.0	0.57	2.21	15.4248676	107.8	176.7	162.4	68.3	176.1	260.12231	87	87	77		1.001	18.352	1980
116	18.649	18.705		0.16	0.16	1.32	1.07	0.35	90	90	77	2.06	1.70	112	0.015	104	105	224.3	0.72	2.23	15.4218407	108.4	177.3	162.9	68.3	176.7	260.36484	87	87	77		1.001	18.519	2010
117	18.809	18.867		0.16	0.16	1.32	1.07	0.35	90	90	77	2.06	1.70	112	0.016	100	101	223.4	0.86	2.24	15.4097099	108.9	177.8	163.5	68.3	177.2	260.38446	87	87	77		1.001	18.676	2037
118	18.969	19.029		0.16	0.16	1.32	1.07	0.35	90	90	77	2.06	1.70	112	0.015	103	104	222.6	0.86	2.15	15.4694691	109.5	178.4	164.1	68.3	177.8	260.87701	87	87	77		1.001	17.882	1960
119	19.130	19.191		0.16	0.16	1.33	1.07	0.35	90	90	77	2.07	1.80	112	0.016	101	101	221.9	0.63	2.17	15.3866072	110.0	178.8	164.5	68.3	178.2	261.21436	87	87	77		1.001	18.027	1984
120	19.290	19.354		0.16	0.16	1.32	1.07	0.35	90	90	77	2.07	1.70	112	0.017	97	99	221.3	0.62	2.03	15.4202747	110.6	179.4	165.5	68.3	178.9	261.70749	87	87	77		1.001	16.896	1871
121	19.450	19.517		0.16	0.16	1.32	1.08	0.35	90	90	77	2.06	1.70	113	0.014	107	109	220.4	0.97	2.02	15.3756437	111.3	180.1	166.0	68.3	179.5	263.0885	87	87	77		1.001	16.841	1876
122	19.611	19.679		0.16	0.16	1.32	1.06	0.35	90	90	77	2.05	1.80	113	0.016	101	101	219.8	0.58	2.05	15.3929167	111.7	180.5	166.4	68.3	180.0	263.18857	87	87	77		1.001	17.091	1912
123	19.771	19.841		0.16	0.16	1.32	1.07	0.35	90	90	77	2.06	1.70	112	0.016	100	101	219.0	0.78	2.03	15.3455744	112.2	181.0	166.9	68.3	180.5	263.41217	87	87	77		1.001	16.911	1900
124	19.932	20.003		0.16	0.16	1.32	1.07	0.35	90	90	77	2.07	1.80	114	0.015	104	104	218.2	0.82	2.07	15.4787741	112.8	181.7	167.4	68.3	181.1	264.46515	87	87	77		1.001	17.227	1946
125	20.093	20.167		0.16	0.16	1.32	1.07	0.35	90	90	77	2.06	1.70	97	0.014	106	108	217.6	0.63	1.31	15.3550978	113.5	182.2	173.0	68.3	181.8	241.34071	85	85	77		1.001	10.905	1239
126	20.254	20.328		0.16	0.16	1.32	1.06	0.35	90	90	77	2.06	1.70	92	0.015	102	102	217.3	0.23	1.82	15.3644295	113.7	182.5	170.1	68.4	182.1	227.78345	84	84	77		1.001	15.141	1724
127	20.415	20.490		0.16	0.16	1.32	1.06	0.35	90	90	77	2.04	1.70	88	0.016	98	99	217.1	0.18	1.84	15.3553438	113.8	182.5	170.1	68.3	182.2	219.04395	83	83	77		1.001	15.276	1741
128	20.576	20.653		0.16	0.16	1.32	1.07	0.35	90	90	77	2.03	1.70	87	0.017	95	96	216.7	0.41	1.78	15.4695997	114.0	182.7	170.1	68.3	182.3	212.24716	82	82	77		1.001	14.795	1689
129	20.737	20.816		0.16	0.16	1.32	1.07	0.35	91	90	77	2.04	1.70	86	0.016	98	99	216.8	-0.12	1.80	15.326149	113.9	182.7	170.2	68.4	182.3	207.48418	81	81	77		1.001	14.955	1705
130	20.898	20.980		0.16	0.16	1.31	1.07	0.35	91	90	77	2.03	1.70	85	0.014	105	107	216.4	0.42	1.85	15.4411354	113.8	182.6	170.2	68.4	182.3	203.26068	80	81	77		1.001	15.437	1759
131	21.060	21.143		0.16	0.16	1.33	1.08	0.35	91	90	77	2.05	1.70	84	0.015	102	102	216.4	0.00	1.84	15.3552246	113.8	182.5	170.0	68.4	182.2	199.64441	81	81	77		1.001	15.278	1740
132	21.221	21.307		0.16	0.16	1.33	1.08	0.35	91	90	77	2.02	1.70	83	0.017	95	97	216.3	0.08	1.80	15.3360958	113.6	182.4	169.9	68.4	182.0	196.68712	80	80	77		1.001	14.952	1701
133	21.383	21.471		0.16	0.16	1.33	1.08	0.35	91	90	77	2.02	1.70	83	0.016	98	100	216.3	0.01	1.87	15.4693766	113.5	182.2	169.8	68.4	181.9	193.87256	80	80	77		1.001	15.602	1773
134	21.545	21.635		0.16	0.16	1.33	1.09	0.35	91	90	77	2.01	1.70	81	0.014	105	106	216.3	0.04	1.86	15.4694538	113.2	182.0	169.6	68.4	181.7	192.88139	79	79	77		1.001	15.441	1750
135	21.707	21.800		0.16	0.16	1.33	1.09	0.35	91	90	77	2.02	1.70	81	0.016	98	100	216.3	0.03	1.89	15.383873	113.0	181.9	169.5	68.5	181.5	190.93247	78	78	77		1.001	15.765	1784
136	21.868	21.965		0.16	0.16	1.33	1.09	0.35	91	90	77	2.00	1.70	80	0.014	104	107	216.2	0.05	1.89	15.4023972	112.8	181.7	169.3	68.5	181.3	188.80627	78	78	77		1.001	15.765	1781
137	22.030	22.130		0.16	0.16	1.33	1.09	0.35	91	90	77	1.99	1.60	80	0.016	98	100	216.2	0.02	1.82	15.4024429	112.6	181.4	169.1	68.5	181.1	186.46185	77	77	77		1.001	15.118	1705
138	22.192	22.295		0.16	0.17	1.33	1.10	0.35	91	90	77	1.99	1.60	80	0.015	101	103	216.2	-0.03	1.82	15.4413271	112.4	181.2	168.9	68.5	180.9	184.07791	77	77	77		1.001	15.117	1701
139	22.354	22.460		0.16	0.16	1.32	1.10	0.35	91	90	77	2.03	1.60	80	0.016	98	100	216.2	-0.01	1.86	15.4023952	112.1	180.9	168.6	68.5	180.6	181.83255	77	77	77		1.001	15.440	1733
140	22.516	22.626		0.16	0.17	1.34	1.11	0.35	91	90	77	1.98	1.60	80	0.016	98	101	216.2	0.03	1.84	15.4023476	111.9	180.7	168.5	68.5	180.4	179.57196	76	76	77		1.001	15.277	1711
141	22.678	22.792		0.16	0.17	1.33	1.11	0.35	91	90	77	2.01	1.60	80	0.015	101	104	216.0	0.18	1.80	15.4024038	111.6	180.4	168.2	68.5	180.1	177.38504	76	76	77		1.001	14.953	1670
142	22.840	22.958		0.16	0.17	1.34	1.12	0.35	91	90	77	1.98	1.60	80	0.016	98	101	216.1	-0.10	1.85	15.5064268	111.3	180.1	167.9	68.5	179.7	175.22777	76	76	77		1.001	15.435	1719
143	23.002	23.125		0.16	0.17	1.34	1.12	0.35	91	90	77	1.99	1.60	80	0.015	101	104	216.2	-0.05	1.84	15.4010096	111.0	179.8	167.6	68.5	179.5	173.12442	76	76	77		1.001	15.277	1697
144	23.164	23.292		0.16	0.17	1.34	1.12	0.35	91	90	77	1.99	1.60	80	0.017	95	98	216.1	0.05	1.84	15.4407187	110.7	179.5	167.4	68.5	179.2	171.1899	76	76	77		1.001	15.279	1693
145	23.326	23.458		0.16	0.17	1.34	0.96	0.35	91	90	77	2.01	1.40	79	0.015	101	104	216.2	-0.04	1.82	15.3903255	110.4	179.2	167.0	68.5	178.9	169.29094	76	76	77		1.001	15.179	1677
146	23.489	23.621		0.16	0.16	1.34	1.06	0.35	91	90	77	1.99	1.50	79	0.017	96	96	216.2	0.01	1.88	15.3406105	110.1	178.9	166.8	68.5	178.6	167.42365	76	76	77		1.001	15.673	1727
147	23.651	23.784		0.16	0.16	1.34	1.06	0.35	91	90	77	1.99	1.50	79	0.016	98	99	216.2	-0.07	1.81	15.3245716	109.7	178.6	166.5	68.5	178.3	165.64853	76	76	77		1.001	15.084	1657
148	23.814	23.946		0.16	0.16	1.34	1.07	0.35	91	90	77	1.98	1.50	79	0.014	105	105	216.1	0.11	1.83	15.3838282	109.4	178.3	166.2	68.6	178.0	163.96707	76	76	77		1.001	15.264	1672
149	23.976	24.109		0.16	0.16	1.34	1.07	0.35	91	90	77	1.99	1.50	79	0.015	101	102	216.1	0.00	1.82	15.4311275	109.1	178.0	165.9	68.6	177.6	162.34734	76	76	77		1.001	15.114	1650
150	24.138	24.273		0.16	0.16	1.34	1.08	0.35	91	90	77	1.97	1.50	79	0.016	98	99	216.3	-0.14	1.87	15.4024334	108.6	177.5	165.6	68.6	177.2	160.81435	76	76	77		1.001	15.596	1696
151	24.301	24.438		0.16	0.16	1.34	1.08	0.35	91	90	77	1.99	1.50	79	0.017	96	97	216.1	0.14	1.89	15.3911819	108.3	177.2	164.9	68.6	176.9	159.32332	76	76	77		1.001	15.761	1709
152	24.463	24.602		0.16	0.16	1.34	1.08	0.35	91	90	77	1.98	1.50	79	0.015	101	103	216.3	-0.15	1.87	15.3514767	107.8	176.8	164.5	68.6	176.5	157.84522	76	76	77		1.001	15.601	1684
153	24.626	24.766		0.16	0.16	1.34	1.08	0.35	91	90	77	1.98	1.50	79	0.014	105	106	216.3	-0.07	1.93	15.3548841	107.4	176.4	164.1	68.6	176.1	156.33969	76	76	77		1.001	16.088	1730
154	24.789	24.931		0.16	0.17	1.34	1.09	0.35	91	90	77	1.98	1.50	79	0.017	96	97	216.2	0.10	1.95	15.4510403	107.1	176.0	163.8	68.6	175.7	154.96936	76	76	77		1.001	16.246	1741
155	24.951	25.095		0.16	0.16	1.34	1.09	0.35	91	90	77	1.98	1.50	79	0.016	98	99	216.3	-0.04	1.93	15.3356953	106.8	175.7	163.5	68.6	175.4	153.45393	76	76	77		1.001	16.089	1720
156	25.114	25.260		0.16	0.17	1.34	1.09	0.35	91	90	77	1.98	1.50	79	0.016	99	100	216.3	0.01	1.87	15.4086647	106.4	175.3	163.2	68.6	175.0	152.03032	76	77	77		1.001	15.600	1661
157	25.277	25.425		0.16	0.16	1.34	1.09	0.35	91	90	77	1.98	1.50	79	0.016	99	100	216.4	-0.17	1.97	15.4509792	106.0	175.0	162.9	68.7	174.7	150.7488	76	77	77		1.001	16.410	1741
158	25.440	25.590		0.16	0.16	1.33	1.09	0.35	91	90	77	1.97	1.50	79	0.016	99	100	216.3	0.17	1.89	15.4153013	105.6	174.6	162.6	68.7	174.3	149.43912	76	77	77		1.001	15.764	1666
159	25.603	25.756		0.16	0.17	1.34	1.10	0.35	91	90	77	1.98	1.50	79	0.015	102	104	216.3	-0.07	1.89	15.4605474	105.2	174.2	162.2	68.6	173.9	148.32248	76	77	77		1.001	15.761	1660
160	25.765	25.921		0.16	0.16	1.34	1.09	0.35	91	90	77	1.97	1.50	79	0.015	101	103	216.2	0.10	1.93	15.4310713	104.8	173.8	161.7	68.6	173.4	147.11137	76	77	77		1.001	16.090	1688
161	25.928	26.086		0.16	0.16	1.35	1.09	0.35	91	90	77	1.97	1.50	79	0.015	102	103	216.3	-0.05	1.95	15.4024153	104.4	173.3	161.4	68.6	173.0	146.02286	76	77	77		1.001	16.249	1699
162	26.091	26.251		0.16	0.17	1.35	1.09	0.35	91	90	77	1.98	1.50	79	0.016	99	100	216.4	-0.08	1.91	15.3261337	104.1	173.0	161.0	68.6	172.7	144.96246	76	77	77		1.001	15.927	1659
163	26.254	26.416		0.16	0.16	1.35	1.10	0.35	91	90	77	1.98	1.50	79	0.016	99	100	216.2	0.13	1.89	15.4126329	103.6	172.6	160.7	68.7	172.2	143.879	76	77	77		1.001	15.763	1634
164	26.417	26.581		0.16	0.16	1.35	1.10	0.35	91	90	77	1.98	1.50	79	0.014	105	107	216.4	-0.19	1.99	15.5275249	103.1	172.2	160.3	68.7	171.9	142.83283	77	77	77		1.001	16.576	1712
165	26.579	26.746		0.16	0.16	1.35	1.10	0.35	91	90	77	1.98	1.50	79	0.016	98	100	216.5	-0.10	1.91	15.4988279	102.7	171.7	160.0	68.8	171.4	141.67323	77	77	77		1.001	15.925	1637
166	26.742	26.912		0.16	0.17	1.35	1.10	0.35	91	90	77	1.96	1.50	79	0.014	105	107	216.4	0.13	1.88	15.4480696	102.2	171.3	159.7	68.8	171.0	140.98729	77	77	77		1.001	15.607	1597
167	26.905	27.077		0.16	0.17	1.35	1.10	0.35	91	90	77	1.98	1.50	79	0.016	99	100	216.3	0.05	1.82	15.3840399	101.9	170.9	159.3	68.8	170.6	139.96173	77	77	77		1.001	15.115	1541
168	27.068	27.243		0.16	0.17	1.35	1.10	0.35	91	90	77	1.96	1.50	79	0.015	102	104	216.5	-0.13	1.86	15.3691034	101.5	170.6	158.9	68.8	170.3	139.08244	77	77	77		1.001	15.439	1569
169	27.231	27.408		0.16	0.17	1.35	1.09	0.35	91	90	77	1.97	1.50	78	0.014	105	107	216.4	0.04	1.91	15.431407	101.1	170.2	158.6	68.8	169.9	138.23836	77	77	77		1.001	15.871	1607
170	27.395	27.573		0.16	0.16	1.35	1.09	0.35	91	90	77	1.97	1.50	79	0.016	99	100	216.5	-0.05	1.97	15.4410706	100.6	169.7	157.7	68.8	169.4	137.28543	77	77	77		1.001	16.425	1654
171	27.558	27.738		0.16	0.16	1.34	1.09	0.35	91	90	77	1.96	1.50	78	0.015	102	103	216.5	0.01	2.00	15.3838825	100.2	169.3	157.3	68.8	169.0	136.58559	77	77	77		1.001	16.661	1671
172	27.721	27.903		0.16	0.16	1.34	1.10	0.35	91	90	77	1.98	1.50	78	0.014	105	107	216.6	-0.18	2.00	15.3929548	99.7	168.9	157.0	68.8	168.5	135.80989	77	77	77		1.001	16.622	1660
173	27.884	28.068		0.16	0.17	1.34	1.10	0.35	91	90	77	1.97	1.50	78	0.016	99	100	216.5	0.14	1.99	15.5175486	99.3	168.4	156.5	68.8	168.1	134.96503	77	77	77		1.001	16.597	1650

Elapsed Time	Particulate Sampling Data																		Fuel Weight, lb		Flow, gpm		Temperature Data, oF													
	Gas Meter Cubic Feet (1)	Gas Meter Cubic Feet (2)	Gas Meter Cubic Feet (amb)	Sample Rate, cfm (1)	Sample Rate, cfm (2)	Orifice dH (1)	Orifice dH (2)	Orifice dH (amb)	Meter oF (1)	Meter oF (2)	Meter oF (amb)	Meter Vac. In. Hg. (1)	Meter Vac. In. Hg. (2)	Dilution Tunnel Temp.	Dilution Tunnel dP	Pro. Rate (%) (1)	Pro. Rate (%) (2)	Scale Reading	Weight Change	Load Side Liquid Flow Rate	Boiler Side Liquid Flow Rate (optional)	Thermopile ΔT	Boiler to Heat Exch. Temp.	Heat Exch to Boiler Temp.	Inlet Load Temp.	Outlet Load Temp.	Stack	Filter (1)	Filter (2)	Ambient		Specific Heat of Inlet Water (BTU/lb-°F)	Mass Flow Rate of Inlet Water (lb/min)	Heat Output, Btu
174	28.047	28.233		0.16	0.16	1.35	1.10	0.35	91	90	77	1.98	1.50	78	0.015	102	103	216.5	0.04	1.95	15.4408607	98.9	168.1	156.2	68.8	167.7	134.33463	77	77	77		1.001	16.251	1610
175	28.210	28.399		0.16	0.17	1.34	1.10	0.35	91	90	77	1.97	1.50	78	0.016	99	100	216.5	-0.04	1.97	15.4028301	98.5	167.6	155.7	68.8	167.2	133.43652	77	77	77		1.001	16.418	1619
176	28.373	28.564		0.16	0.16	1.34	1.10	0.35	91	90	77	1.98	1.50	78	0.017	96	97	216.6	-0.06	2.01	15.4604034	98.1	167.1	155.4	68.7	166.8	132.97093	77	77	77		1.001	16.740	1644
177	28.537	28.730		0.16	0.17	1.35	1.10	0.35	91	90	77	1.98	1.50	78	0.017	96	97	216.5	0.02	1.95	15.3551855	97.7	166.8	155.0	68.7	166.4	132.1404	77	77	77		1.001	16.258	1591
178	28.700	28.895		0.16	0.16	1.35	1.10	0.35	91	90	77	1.97	1.50	78	0.015	102	103	216.6	-0.07	1.93	15.4122744	97.3	166.2	154.6	68.7	165.9	131.4902	77	77	77		1.001	16.095	1567
179	28.863	29.060		0.16	0.16	1.35	1.10	0.35	91	90	76	1.96	1.50	78	0.017	96	97	216.6	-0.01	2.01	15.401701	96.8	165.8	154.2	68.7	165.5	130.97025	77	77	76		1.001	16.738	1623
180	29.025	29.225		0.16	0.17	1.35	1.09	0.35	91	90	77	1.96	1.50	78	0.015	101	103	216.5	0.08	2.01	15.3658791	96.5	165.5	153.7	68.7	165.1	130.5145	77	77	77		1.001	16.742	1617
181	29.188	29.390		0.16	0.16	1.35	1.10	0.35	91	90	77	1.97	1.50	78	0.014	105	107	216.5	0.02	2.07	15.3668003	95.9	165.0	153.3	68.7	164.6	129.59918	77	77	77		1.001	17.227	1655
182	29.351	29.556		0.16	0.17	1.35	1.10	0.35	91	90	77	1.98	1.50	78	0.016	99	100	216.6	-0.13	2.07	15.3482294	95.5	164.6	153.0	68.7	164.2	129.00198	77	77	77		1.001	17.227	1648
183	29.515	29.721		0.16	0.16	1.35	1.10	0.35	91	90	77	1.98	1.50	78	0.015	102	103	216.6	0.06	2.05	15.3927431	95.1	164.2	152.4	68.7	163.8	128.54131	77	77	77		1.001	17.064	1625
184	29.678	29.886		0.16	0.16	1.35	1.10	0.35	91	90	77	1.98	1.50	78	0.015	102	103	216.6	-0.02	2.05	15.4512453	94.6	163.7	152.0	68.7	163.3	127.82579	77	77	77		1.001	17.059	1616
185	29.841	30.051		0.16	0.16	1.35	1.10	0.35	91	90	77	1.98	1.50	78	0.016	99	100	216.6	0.04	1.95	15.4511366	94.2	163.3	152.3	68.7	162.9	126.96413	77	77	77		1.001	16.249	1532
186	30.004	30.217		0.16	0.17	1.35	1.09	0.35	91	90	77	1.97	1.50	78	0.016	99	100	216.7	-0.12	2.07	15.3359156	93.7	162.8	151.2	68.7	162.4	126.34549	77	77	77		1.001	17.221	1616
187	30.167	30.383		0.16	0.17	1.35	1.10	0.35	91	90	77	1.97	1.50	78	0.015	102	104	216.6	0.05	2.13	15.3639679	93.2	162.3	150.8	68.7	162.0	125.83617	77	77	77		1.001	17.710	1653
188	30.331	30.548		0.16	0.16	1.35	1.10	0.35	91	90	77	1.97	1.50	78	0.015	102	103	216.6	0.07	2.05	15.4116793	92.8	161.9	150.1	68.7	161.5	132.86844	77	77	77		1.001	17.062	1586
189	30.494	30.712		0.16	0.16	1.34	1.08	0.35	91	90	77	1.97	1.50	92	0.016	100	100	216.1	0.49	2.11	15.3556995	92.5	161.5	149.7	68.6	161.1	161.34291	79	79	77		1.001	17.546	1625
190	30.657	30.876		0.16	0.16	1.34	1.09	0.35	91	90	77	1.98	1.50	93	0.016	100	101	215.4	0.67	2.05	15.4788399	92.1	161.0	149.4	68.6	160.7	174.86716	79	80	77		1.001	17.061	1573
191	30.819	31.040		0.16	0.16	1.35	1.09	0.35	91	90	77	1.99	1.50	93	0.016	99	101	214.9	0.50	2.13	15.440732	91.8	160.7	149.0	68.5	160.3	183.82492	79	80	77		1.001	17.710	1628
192	30.982	31.205		0.16	0.16	1.35	1.09	0.35	91	90	77	1.99	1.50	95	0.015	103	105	214.3	0.58	2.11	15.3764277	91.5	160.4	148.8	68.5	160.0	192.27171	79	80	77		1.001	17.546	1607
193	31.145	31.369		0.16	0.16	1.34	1.09	0.35	91	90	77	1.99	1.50	97	0.016	100	101	213.8	0.49	2.07	15.3744268	91.4	160.3	148.6	68.5	159.9	199.7581	79	80	77		1.001	17.222	1576
194	31.307	31.533		0.16	0.16	1.35	1.09	0.35	91	90	77	2.00	1.50	98	0.016	100	101	213.2	0.60	2.03	15.4509048	91.5	160.4	148.8	68.5	160.0	205.5705	79	79	77		1.001	16.896	1548
195	31.469	31.697		0.16	0.16	1.35	1.08	0.35	91	90	77	2.00	1.50	99	0.016	100	101	212.5	0.70	2.13	15.4510193	91.6	160.6	148.9	68.5	160.1	209.54523	79	79	77		1.001	17.707	1625
196	31.632	31.861		0.16	0.16	1.34	1.09	0.35	91	90	77	1.99	1.50	100	0.016	101	101	212.1	0.40	2.11	15.4314928	91.8	160.7	149.1	68.5	160.3	213.53168	80	80	77		1.001	17.549	1613
197	31.794	32.025		0.16	0.16	1.35	1.09	0.35	91	90	77	1.98	1.50	101	0.017	97	98	211.5	0.63	2.19	15.4314165	92.0	161.0	149.0	68.5	160.5	217.70287	80	80	77		1.001	18.196	1675
198	31.956	32.189		0.16	0.16	1.35	1.09	0.35	91	90	77	2.00	1.50	103	0.016	100	101	210.8	0.71	2.15	15.2786856	92.1	161.2	149.2	68.6	160.7	223.64519	80	81	77		1.001	17.868	1648
199	32.118	32.353		0.16	0.16	1.35	1.09	0.35	91	90	77	2.00	1.50	105	0.016	100	102	210.3	0.53	2.15	15.4512339	92.4	161.4	149.4	68.6	160.9	229.64436	81	81	77		1.001	17.878	1653
200	32.280	32.518		0.16	0.16	1.35	1.09	0.35	91	90	77	2.01	1.50	106	0.015	104	106	209.5	0.75	2.19	15.4527235	92.8	161.8	149.8	68.6	161.3	234.54453	81	82	77		1.001	18.193	1690
201	32.442	32.681		0.16	0.16	1.35	1.09	0.35	91	90	77	2.00	1.50	108	0.016	101	101	208.7	0.83	2.17	15.459033	93.1	162.1	150.1	68.5	161.7	239.8794	82	82	77		1.001	18.035	1681
202	32.604	32.844		0.16	0.16	1.35	1.09	0.35	91	90	77	2.00	1.50	109	0.016	101	101	208.0	0.69	2.21	15.4411449	93.5	162.4	150.4	68.5	162.0	245.04773	83	83	77		1.001	18.356	1718
203	32.766	33.008		0.16	0.16	1.35	1.09	0.35	91	90	77	2.02	1.50	110	0.016	101	102	207.2	0.80	2.15	15.3838711	93.8	162.7	150.6	68.5	162.3	249.72372	83	84	77		1.001	17.876	1679
204	32.927	33.171		0.16	0.16	1.34	1.09	0.35	91	90	77	2.02	1.50	110	0.016	100	101	206.4	0.82	2.08	15.4024019	94.3	163.2	150.8	68.4	162.7	249.45241	84	84	77		1.001	17.296	1633
205	33.089	33.334		0.16	0.16	1.35	1.09	0.35	91	90	77	2.02	1.60	110	0.017	98	98	205.6	0.79	2.25	15.4603024	94.8	163.7	151.2	68.4	163.2	250.45309	84	84	77		1.001	18.761	1781
206	33.251	33.498		0.16	0.16	1.34	1.09	0.35	91	90	77	2.03	1.60	109	0.015	104	105	204.6	0.94	2.15	15.4408245	95.4	164.3	151.7	68.4	163.8	250.40184	84	85	77		1.001	17.920	1711
207	33.412	33.660		0.16	0.16	1.34	1.08	0.35	91	90	77	2.03	1.60	110	0.015	103	104	203.9	0.71	2.22	15.3550282	96.0	165.0	152.2	68.4	164.4	251.02095	85	85	77		1.001	18.435	1773
208	33.573	33.822		0.16	0.16	1.34	1.07	0.35	91	90	77	2.03	1.60	110	0.014	107	108	203.1	0.79	2.12	15.3947964	96.6	165.5	152.7	68.4	165.0	252.62918	85	85	77		1.001	17.611	1703
209	33.734	33.985		0.16	0.16	1.33	1.07	0.35	91	90	77	2.03	1.60	110	0.017	97	98	202.2	0.90	2.19	15.5365839	97.2	166.1	153.2	68.4	165.6	252.74007	85	86	77		1.001	18.256	1776
210	33.896	34.148		0.16	0.16	1.33	1.07	0.35	91	90	77	2.05	1.60	110	0.016	101	101	201.6	0.64	2.14	15.4324961	97.9	166.8	153.8	68.4	166.3	253.55737	86	86	77		1.001	17.812	1745
211	34.057	34.310		0.16	0.16	1.33	1.06	0.35	91	90	77	2.05	1.60	111	0.014	107	108	200.8	0.81	2.22	15.3549404	98.4	167.3	154.3	68.4	166.8	254.28627	86	87	77		1.001	18.483	1821
212	34.218	34.471		0.16	0.16	1.32	1.07	0.35	91	90	77	2.04	1.60	111	0.014	107	107	200.0	0.83	2.19	15.3119946	98.9	167.8	154.8	68.4	167.3	253.01694	86	87	77		1.001	18.250	1807
213	34.379	34.633		0.16	0.16	1.32	1.07	0.35	91	90	77	2.05	1.60	111	0.015	104	104	199.3	0.65	2.19	15.4606133	99.5	168.4	155.3	68.4	167.9	253.47685	86	87	77		1.001	18.195	1812
214	34.539	34.796		0.16	0.16	1.32	1.06	0.35	91	90	77	2.06	1.60	110	0.015	103	105	198.5	0.85	2.13	15.402422	100.2	169.2	155.8	68.4	168.6	253.98338	86	87	77		1.001	17.708	1776
215	34.700	34.957		0.16	0.16	1.32	1.05	0.35	91	90	77	2.05	1.60	110	0.017	97	97	197.7	0.75	2.22	15.3639908	100.7	169.7	156.3	68.4	169.1	253.89833	86	87	77		1.001	18.516	1866
216	34.861	35.117		0.16	0.16	1.33	1.05	0.35	91	90	77	2.04	1.60	110	0.016	100	100	197.1	0.65	2.16	15.3713217	101.1	170.1	156.7	68.4	169.5	254.03198	87	87	77		1.001	17.973	1819
217	35.022	35.278		0.16	0.16	1.32	1.06	0.35	91	90	77	2.04	1.60	110	0.016	100	100	196.2	0.87	2.15	15.4024315	101.8	170.8	157.3	68.4	170.3	254.4556	86	87	77		1.001	17.871	1822
218	35.183	35.440		0.16	0.16	1.33	1.06	0.35	91	90	77	2.04	1.60	110	0.015	103	104	195.3	0.86	2.21	15.4788418	102.3	171.3	157.7	68.4	170.7	253.95827	86	87	77		1.001	18.375	1881
219	35.344	35.600		0.16	0.16	1.32	1.05	0.35	91	90	77	2.05	1.60	110	0.017	97	97	194.8	0.55	2.11	15.4515152	103.0	172.0	158.3	68.4	171.4	254.95578	87	87	77		1.001	17.565	1811
220	35.505	35.761		0.16	0.16	1.32	1.05	0.35	91	90	77	2.04	1.60	109	0.016	100	100	194.1	0.68	2.21	15.5005369	103.3	172.3	158.7	68.4	171.7	253.4261	86	87	77		1.001	18.382	1902
221	35.666	35.923		0.16	0.16	1.33	1.05	0.35	91	90	77	2.05	1.60	110	0.016	100	101	193.3	0.76	2.13	15.4189224	103.7	172.8	159.0	68.4	172.2	254.67792	87	87	77		1.001	17.726	1841
222	35.826	36.083		0.16	0.16	1.32	1.04	0.35	91	90	77	2.04	1.60	110	0.016	100	100	192.7	0.67	2.17	15.364049	104.3	173.4	159.5	68.4	172.7	255.95001	87	87	77		1.001	18.057	1886
223	35.987	36.242		0.16	0.16	1.32	1.04	0.35	91	90	77	2.06	1.60	110	0.015	103	102	191.9	0.81	2.18	15.392993	104.9	173.9	160.0	68.4	173.3	256.74814	86	87	77		1.001	18.181	1909
224	36.148	36.403		0.16	0.16	1.32	1.04	0.35	91	90	77	2.06	1.60	111	0.015	104	104	191.2	0.69	2.18	15.3839092	105.4	174.4	160.5	68.4	173.8	257.69238	86	87	77		1.001	18.182	1918
225	36.308	36.562		0.16	0.16	1.32	1.02	0.35	91	90	77	2.05	1.70	111	0.014	107	106	190.5	0.64	2.17	15.3457346	105.9	175.0	160.9	68.4	174.4	259.06195	87	87	77		1.001	18.032	1913
226	36.469	36.721		0.16	0.16	1.32	1.02	0.35	91	90	77	2.05	1.70	112	0.016	100	99	189.8	0.71	2.17	15.3911657	106.5	175.6	161.5	68.4	175.0	260.71057	87	87	77		1.001	18.022	1922
227	36.629	36.880		0.16	0.16	1.32	1.02	0.35	91	90	77	2.05	1.70	112	0.016	100	99	189.1	0.75	2.19	15.4222422	107.1	176.1	161.9	68.4	175.5	260.24612	87	87	77		1.001	18.187	1950
228	36.790	37.038		0.16	0.16	1.32	1.02	0.35	91	90	77	2.04	1.70	112	0.016	100	99	188.5	0.56	2.11	15.3944445	107.6	176.6	162.4	68.4	176.0	260.40219	86	87	77		1.001	17.547	1890
229	36.951	37.197		0.16	0.16	1.32	1.02	0.35	91	90	77	2.04	1.70	111	0.016	100	99	187.7	0.79	2.23	15.4128046	108.2	177.2	162.9	68.4	176.6	259.7233	86	86	77		1.001	18.518	2005
230	37.111	37.355		0.16	0.16	1.32	1.01	0.35	91	90	77	2.06	1.70	111	0.016	100	98	187.1	0.63	2.17	15.412818	108.7	177.8	163.3	68.4	177.1	259.59256	86	86	77		1.001	18.039	1964
231	37.272	37.513		0.16	0.16	1.33	1.02	0.35	91	90	77	2.05	1.70	111	0.016	100	98	186.4	0.72	2.15	15.355628	109.2	178.2	163.8	68.4	177.6	259.57059	86	86	77		1.001	17.874	1954
232	37.432	37.672		0.16	0.16	1.32	1.02	0.35	91	90	77	2.06	1.70	111	0.017	97	96	185.5	0.88	2.21	15.4128132	109.7	178.8	164.2	68.4	178.1	260.94354	86	86	77		1.001	18.351	2016
233	37.593	37.830		0.16	0.16	1.32	1.02	0.35	91	90	77	2.06	1.70	112	0.016	100	99	185.0	0.56	2.22	15.3744488	110.3	179.4	164.7	68.4	178.7	263.07327	86	86	77		1.001	18.516	2045
234	37.753	37.989		0.16	0.16	1.33	1.02	0.35	91	90	77	2.05	1.70	112	0.016	100	99	184.4	0.60	2.19	15.3503094	110.8	179.8	165.1	68.4	179.2	262.74301	86	87	77		1.001	18.191	2017
235	37.914	38.148		0.16	0.16	1.32	1.02	0.35	91	90	77	2.07	1.70	112	0.016	100	99	183.7	0.70	2.17	15.412818	111.3	180.4	165.6	68.4	179.8	262.39237	86	87	77		1.001	18.031	2010

Elapsed Time	Particulate Sampling Data																	Fuel Weight, lb		Flow, gpm		Temperature Data, oF													
	Gas Meter Cubic Feet (1)	Gas Meter Cubic Feet (2)	Gas Meter Cubic Feet (amb)	Sample Rate, cfm (1)	Sample Rate, cfm (2)	Orifice dH (1)	Orifice dH (2)	Orifice dH (amb)	Meter oF (1)	Meter oF (2)	Meter oF (amb)	Meter Vac. In. Hg. (1)	Meter Vac. In. Hg. (2)	Dilution Tunnel Temp.	Dilution Tunnel dP	Pro. Rate (%) (1)	Pro. Rate (%) (2)	Scale Reading	Weight Change	Load Side Liquid Flow Rate	Boiler Side Liquid Flow Rate (optional)	Thermopile ΔT	Boiler to Heat Exch. Temp.	Heat Exch to Boiler Temp.	Inlet Load Temp.	Outlet Load Temp.	Stack	Filter (1)	Filter (2)	Ambient		Specific Heat of Inlet Water (BTU/lb-°F)	Mass Flow Rate of Inlet Water (lb/min)	Heat Output, Btu
236	38.074	38.306		0.16	0.16	1.32	1.02	0.35	91	90	77	2.07	1.70	112	0.015	103	102	183.0	0.68	2.13	15.4509449	111.8	180.9	166.0	68.4	180.3	262.60675	86	86	77		1.001	17.707	1982
237	38.235	38.465		0.16	0.16	1.32	1.02	0.35	91	90	77	2.07	1.70	112	0.016	100	99	182.2	0.80	2.21	15.3929529	112.3	181.4	166.5	68.4	180.8	261.97318	86	86	77		1.001	18.354	2064
238	38.396	38.623		0.16	0.16	1.32	1.03	0.35	91	90	77	2.05	1.70	107	0.014	107	105	181.7	0.45	2.17	15.4071522	112.8	181.9	167.0	68.4	181.2	258.02896	85	85	77		1.001	18.034	2036
239	38.557	38.783		0.16	0.16	1.32	1.02	0.35	91	90	77	2.04	1.70	94	0.015	102	101	181.2	0.55	2.11	15.4313488	113.3	182.4	167.3	68.4	181.7	237.47128	83	83	77		1.001	17.545	1989
240	38.718	38.942		0.16	0.16	1.32	1.03	0.35	91	90	77	2.04	1.60	90	0.015	102	100	180.7	0.44	2.15	15.4221201	113.6	182.7	167.6	68.4	182.0	225.43785	83	83	77		1.001	17.865	2032
241	38.879	39.101		0.16	0.16	1.32	1.03	0.35	91	90	77	2.05	1.60	87	0.016	98	97	180.3	0.40	2.24	15.4068661	113.5	182.7	167.6	68.4	182.0	217.2795	82	83	77		1.001	18.676	2123
242	39.040	39.261		0.16	0.16	1.32	1.03	0.35	91	90	77	2.04	1.60	87	0.016	98	98	180.0	0.36	2.19	15.4311523	113.6	182.6	167.7	68.4	182.0	211.05025	82	83	77		1.001	18.193	2068
243	39.202	39.421		0.16	0.16	1.32	1.02	0.35	91	90	77	2.04	1.70	86	0.015	102	101	179.9	0.10	2.24	15.3744383	113.4	182.5	167.5	68.4	181.8	205.89853	81	82	77		1.001	18.676	2120
244	39.363	39.580		0.16	0.16	1.32	1.07	0.35	91	90	77	2.03	1.70	85	0.016	98	97	179.6	0.23	2.15	15.3168688	113.3	182.3	167.6	68.4	181.7	201.63294	81	81	77		1.001	17.869	2027
245	39.524	39.744		0.16	0.16	1.32	1.09	0.35	91	90	77	2.02	1.70	84	0.015	101	103	179.5	0.15	2.05	15.3474951	113.1	182.1	167.4	68.4	181.5	198.2628	80	81	77		1.001	17.060	1932
246	39.686	39.909		0.16	0.16	1.32	1.09	0.35	91	90	77	2.04	1.70	83	0.016	98	100	179.4	0.07	2.13	15.40242	113.0	182.0	167.4	68.4	181.4	195.48238	80	80	77		1.001	17.708	2003
247	39.847	40.073		0.16	0.16	1.32	1.09	0.35	91	90	77	2.03	1.70	82	0.016	98	100	179.3	0.14	1.99	15.3549061	112.9	181.7	167.9	68.4	181.3	193.29472	79	80	77		1.001	16.572	1873
248	40.009	40.238		0.16	0.16	1.33	1.09	0.35	91	90	77	2.02	1.70	81	0.014	105	107	179.0	0.30	2.09	15.4024067	112.7	181.6	167.7	68.4	181.1	191.68883	79	79	77		1.001	17.384	1962
249	40.171	40.402		0.16	0.16	1.33	1.09	0.35	91	90	77	2.04	1.70	80	0.015	101	103	179.0	-0.04	2.03	15.3457327	112.5	181.4	167.5	68.4	180.9	189.40912	78	78	77		1.001	16.898	1903
250	40.333	40.566		0.16	0.16	1.32	1.09	0.35	91	90	77	2.04	1.70	80	0.014	105	106	178.9	0.14	2.07	15.3929615	112.2	181.1	167.3	68.5	180.7	187.09126	78	78	77		1.001	17.223	1935
251	40.495	40.731		0.16	0.16	1.33	1.09	0.35	91	90	77	2.00	1.70	80	0.016	98	100	178.8	0.10	1.89	15.4312963	112.0	180.8	167.9	68.4	180.5	184.644	77	77	77		1.001	15.764	1768
252	40.657	40.895		0.16	0.16	1.34	1.09	0.35	91	90	77	2.00	1.70	80	0.016	98	99	178.8	0.02	1.84	15.4508705	111.8	180.6	167.7	68.5	180.3	182.24268	77	77	77		1.001	15.279	1710
253	40.819	41.061		0.16	0.17	1.34	1.10	0.35	91	90	77	2.01	1.70	80	0.017	95	98	178.6	0.15	1.87	15.392993	111.5	180.3	167.5	68.4	179.9	179.94238	76	77	77		1.001	15.601	1741
254	40.981	41.226		0.16	0.16	1.34	1.10	0.35	91	90	77	2.01	1.60	80	0.015	101	103	178.6	0.02	1.91	15.3638687	111.2	180.0	167.3	68.5	179.7	177.75652	76	76	77		1.001	15.926	1773
255	41.143	41.392		0.16	0.17	1.34	1.10	0.35	91	90	77	2.00	1.60	80	0.015	101	104	178.6	-0.05	1.89	15.431427	110.9	179.7	167.0	68.5	179.4	175.60341	76	76	77		1.001	15.764	1750
256	41.305	41.558		0.16	0.17	1.34	1.10	0.35	91	90	77	2.00	1.60	79	0.017	95	97	178.6	0.03	1.86	15.364006	110.6	179.4	166.7	68.5	179.0	173.45194	76	76	77		1.001	15.444	1709
257	41.467	41.724		0.16	0.17	1.34	1.11	0.35	91	90	77	2.02	1.60	79	0.016	98	100	178.6	-0.02	1.89	15.4311256	110.3	179.1	166.4	68.5	178.8	171.43626	75	76	77		1.001	15.764	1740
258	41.629	41.890		0.16	0.17	1.34	1.11	0.35	91	90	77	2.00	1.60	79	0.015	101	104	178.7	-0.09	1.95	15.3168535	110.0	178.8	166.2	68.5	178.5	169.53404	75	76	77		1.001	16.248	1789
259	41.791	42.056		0.16	0.17	1.34	1.11	0.35	91	90	77	2.00	1.60	79	0.016	98	100	178.6	0.11	1.91	15.4380884	109.6	178.4	166.0	68.5	178.1	167.73119	75	76	77		1.001	15.927	1747
260	41.954	42.220		0.16	0.16	1.33	1.05	0.35	91	90	77	2.00	1.50	79	0.013	109	110	178.7	-0.05	1.89	15.3977823	109.3	178.1	165.6	68.5	177.8	163.59776	75	76	77		1.001	15.762	1724
261	42.116	42.382		0.16	0.16	1.33	1.05	0.35	91	90	77	2.00	1.50	79	0.015	101	101	178.6	0.07	1.89	15.3928375	108.9	177.8	165.3	68.5	177.5	163.13394	75	76	77		1.001	15.762	1719
262	42.278	42.544		0.16	0.16	1.33	1.06	0.35	91	90	77	1.98	1.50	79	0.017	95	95	178.6	0.01	1.93	15.4049845	108.6	177.4	165.0	68.5	177.1	162.2083	75	76	77		1.001	16.088	1748
263	42.439	42.708		0.16	0.16	1.33	1.06	0.35	91	90	77	1.98	1.50	79	0.017	94	96	178.5	0.04	1.90	15.3839159	108.2	177.1	164.7	68.5	176.8	160.90535	75	76	77		1.001	15.804	1713
264	42.601	42.870		0.16	0.16	1.33	1.06	0.35	91	90	77	1.97	1.5	79	0.015	101	101	178.6	-0.06	1.91	15.3839207	107.9	176.8	164.4	68.5	176.4	159.52757	76	76	77		1.001	15.928	1721
265	42.763	43.033		0.16	0.16	1.33	1.06	0.35	91	90	77	1.99	1.5	79	0.016	98	99	178.5	0.09	1.93	15.4396553	107.5	176.4	164.0	68.6	176.0	158.18018	76	76	77		1.001	16.092	1732
266	42.925	43.196		0.16	0.16	1.33	1.07	0.35	91	90	77	1.98	1.5	79	0.015	101	102	178.5	0.00	1.89	15.4022036	107.2	176.1	163.8	68.6	175.7	156.70027	76	76	77		1.001	15.763	1692
267	43.087	43.359		0.16	0.16	1.33	1.07	0.35	91	90	77	1.99	1.5	79	0.014	105	105	178.5	0.00	1.91	15.39289	106.8	175.7	163.4	68.6	175.3	155.28288	76	76	77		1.001	15.928	1703
268	43.249	43.523		0.16	0.16	1.33	1.07	0.35	91	90	77	1.99	1.5	79	0.016	98	99	178.7	-0.22	1.91	15.3744764	106.5	175.4	163.2	68.6	175.0	153.80856	76	76	77		1.001	15.929	1698
269	43.412	43.687		0.16	0.16	1.33	1.07	0.35	91	90	77	1.99	1.5	79	0.016	99	99	178.7	0.08	1.84	15.4509001	106.1	174.9	162.8	68.6	174.6	152.43045	76	76	77		1.001	15.282	1623
270	43.574	43.850		0.16	0.16	1.33	1.07	0.35	91	90	77	1.98	1.5	79	0.017	95	96	178.7	-0.06	1.86	15.4325342	105.7	174.6	162.5	68.6	174.3	151.20946	76	76	77		1.001	15.439	1634
271	43.736	44.013		0.16	0.16	1.33	1.07	0.35	91	90	77	1.97	1.5	78	0.016	98	99	178.7	0.05	1.93	15.4025278	105.3	174.2	162.2	68.6	173.9	149.96541	76	76	77		1.001	16.089	1696
272	43.898	44.176		0.16	0.16	1.33	1.08	0.35	91	90	77	1.98	1.5	78	0.016	98	99	178.7	0.00	1.89	15.4490023	104.9	173.8	161.8	68.6	173.5	148.64032	76	76	77		1.001	15.766	1656
273	44.061	44.341		0.16	0.16	1.33	1.08	0.35	91	90	77	1.98	1.5	78	0.016	99	100	178.7	0.01	1.91	15.4300032	104.5	173.4	161.4	68.6	173.1	147.43361	76	77	77		1.001	15.927	1667
274	44.223	44.504		0.16	0.16	1.33	1.07	0.35	91	90	77	1.97	1.5	78	0.016	98	99	178.6	0.05	1.95	15.4031725	104.1	173.0	161.1	68.6	172.7	146.27898	76	77	77		1.001	16.251	1694
275	44.385	44.668		0.16	0.16	1.34	1.07	0.35	91	90	77	1.97	1.5	78	0.015	101	102	178.7	-0.13	1.95	15.4890909	103.8	172.7	160.8	68.6	172.4	145.00499	76	77	77		1.001	16.253	1689
276	44.547	44.831		0.16	0.16	1.33	1.07	0.35	91	90	77	1.98	1.5	78	0.016	98	99	178.7	0.04	1.89	15.4312563	103.4	172.3	160.4	68.6	172.0	144.13405	76	77	77		1.001	15.765	1631
277	44.710	44.995		0.16	0.16	1.33	1.08	0.35	91	90	77	1.98	1.5	78	0.016	99	99	178.6	0.06	2.01	15.4405651	102.9	171.9	160.1	68.6	171.6	143.17992	76	77	77		1.001	16.737	1725
278	44.872	45.158		0.16	0.16	1.34	1.08	0.35	91	90	77	1.98	1.5	78	0.016	98	99	178.8	-0.13	1.89	15.4126959	102.6	171.5	159.8	68.6	171.2	142.13666	76	77	77		1.001	15.764	1619
279	45.035	45.323		0.16	0.16	1.33	1.07	0.35	91	90	77	1.97	1.5	78	0.016	99	100	178.7	0.02	1.86	15.3357449	102.1	171.1	159.4	68.6	170.8	141.1431	76	77	77		1.001	15.443	1579
280	45.197	45.486		0.16	0.16	1.33	1.07	0.35	91	90	77	1.98	1.5	78	0.015	101	102	178.8	-0.09	1.82	15.3930206	101.7	170.7	159.0	68.7	170.4	140.13896	76	77	77		1.001	15.119	1540
281	45.360	45.649		0.16	0.16	1.33	1.08	0.35	91	90	77	1.97	1.5	78	0.016	99	99	178.8	0.00	1.93	15.4125681	101.4	170.3	158.8	68.7	170.0	139.39246	76	77	77		1.001	16.092	1633
282	45.522	45.813		0.16	0.16	1.34	1.07	0.35	91	90	77	1.97	1.5	78	0.016	98	99	178.8	0.07	1.87	15.3549204	100.9	169.8	158.3	68.7	169.6	138.51801	77	77	77		1.001	15.602	1576
283	45.685	45.977		0.16	0.16	1.34	1.08	0.35	91	90	77	1.98	1.5	78	0.016	99	99	178.9	-0.09	1.91	15.3838844	100.6	169.5	158.0	68.7	169.3	137.69869	77	77	77		1.001	15.920	1603
284	45.847	46.140		0.16	0.16	1.34	1.08	0.35	90	90	77	1.96	1.5	78	0.016	98	99	178.8	0.02	1.94	15.517458	100.1	169.1	157.6	68.7	168.8	136.63776	76	77	77		1.001	16.129	1616
285	46.009	46.305		0.16	0.16	1.34	1.07	0.35	90	90	77	1.97	1.5	78	0.015	101	103	178.8	0.01	1.94	15.4866505	99.7	168.7	157.3	68.7	168.4	135.92828	77	77	77		1.001	16.172	1615
286	46.172	46.468		0.16	0.16	1.34	1.07	0.35	90	90	77	1.98	1.5	78	0.015	102	102	178.8	0.00	2.04	15.412653	99.2	168.2	156.5	68.7	168.0	135.13532	77	77	77		1.001	16.970	1686
287	46.334	46.631		0.16	0.16	1.34	1.07	0.35	90	90	77	1.97	1.5	78	0.016	98	99	178.9	-0.02	2.06	15.4764309	98.9	167.9	156.2	68.7	167.6	134.57579	77	77	77		1.001	17.183	1701
288	46.496	46.795		0.16	0.16	1.34	1.08	0.35	90	90	77	1.98	1.5	78	0.016	98	99	178.9	-0.01	2.04	15.4693565	98.5	167.5	155.9	68.7	167.2	133.85881	77	77	77		1.001	16.936	1670
289	46.658	46.959		0.16	0.16	1.34	1.08	0.35	91	90	77	1.97	1.5	78	0.015	101	102	178.8	0.08	2.02	15.3929758	98.0	167.1	155.5	68.7	166.8	132.75159	77	77	77		1.001	16.839	1653
290	46.821	47.123		0.16	0.16	1.34	1.08	0.35	90	90	77	1.98	1.5	78	0.014	106	106	178.7	0.08	1.97	15.4497709	97.7	166.7	155.1	68.7	166.4	132.24439	77	77	77		1.001	16.402	1604
291	46.983	47.287		0.16	0.16	1.34	1.08	0.35	90	90	77	1.98	1.5	78	0.016	98	99	178.9	-0.16	1.97	15.4368649	97.2	166.2	154.8	68.7	166.0	131.42709	77	77	77		1.001	16.422	1599
292	47.145	47.450		0.16	0.16	1.34	1.07	0.35	90	90	77	1.98	1.5	78	0.014	105	105	178.9	-0.07	1.93	15.3549423	96.9	165.9	154.5	68.7	165.6	130.79092	77	77	77		1.001	16.090	1560
293	47.308	47.613		0.16	0.16	1.34	1.08	0.35	90	90	77	1.97	1.5	78	0.016	99	99	179.0	-0.05	1.99	15.315731	96.4	165.4	154.0	68.7	165.1	130.31842	77	77	77		1.001	16.579	1600
294	47.470	47.777		0.16	0.16	1.34	1.08	0.35	90	90	77	1.98	1.5	77	0.015	101	102	179.1	-0.06	1.95	15.4695978	96.1	165.1	153.7	68.7	164.8	129.54097	77	77	77		1.001	16.251	1563
295	47.633	47.941		0.16	0.16	1.34	1.08	0.35	90	90	77	1.98	1.5	77	0.015	102	102	179.1	-0.01	1.99	15.4023972	95.5	164.5	153.3	68.7	164.2	128.959	77	77	77		1.001	16.579	1585
296	47.795	48.105		0.16	0.16	1.34	1.08	0.35	90	90	77	1.98	1.5	78	0.015	101	102	178.8	0.22	2.03	15.4604187	95.1	164.1	152.6	68.7	163.8	128.23625	77	77	77		1.001	16.902	1608
297	47.958	48.269		0.16	0.16	1.34	1.08	0.35	90	90	77	1.97	1.5	78	0.016	99	99	179.0	-0.20	1.97	15.507885	94.6	163.7	152.2	68.7	163.4	127.40585	77	77	77		1.001	16.415	1555

Elapsed Time	Particulate Sampling Data																	Fuel Weight, lb		Flow, gpm		Temperature Data, oF												
	Gas Meter Cubic Feet (1)	Gas Meter Cubic Feet (2)	Gas Meter Cubic Feet (amb)	Sample Rate, cfm (1)	Sample Rate, cfm (2)	Orifice dH (1)	Orifice dH (2)	Orifice dH (amb)	Meter oF (1)	Meter oF (2)	Meter oF (amb)	Meter Vac. In. Hg. (1)	Meter Vac. In. Hg. (2)	Dilution Tunnel Temp.	Dilution Tunnel dP	Pro. Rate (%) (1)	Pro. Rate (%) (2)	Scale Reading	Weight Change	Load Side Liquid Flow Rate	Boiler Side Liquid Flow Rate (optional)	Thermopile ΔT	Boiler to Heat Exch. Temp.	Heat Exch to Boiler Temp.	Inlet Load Temp.	Outlet Load Temp.	Stack	Filter (1)	Filter (2)	Ambient		Specific Heat of Inlet Water (BTU/lb-°F)	Mass Flow Rate of Inlet Water (lb/min)	Heat Output, Btu
298	48.120	48.432		0.16	0.16	1.34	1.07	0.35	90	90	77	1.96	1.5	78	0.015	101	102	178.9	0.13	2.05	15.4301682	94.1	163.3	151.4	68.8	162.9	127.12772	77	77	77		1.001	17.065	1608
299	48.283	48.596		0.16	0.16	1.33	1.07	0.35	90	90	77	1.97	1.5	78	0.015	102	102	179.0	-0.04	2.13	15.3604956	93.7	162.9	151.0	68.8	162.5	126.26122	77	77	77		1.001	17.713	1662
300	48.445	48.759		0.16	0.16	1.34	1.08	0.35	90	90	77	1.98	1.5	78	0.017	95	96	179.0	-0.05	2.03	15.4597836	93.5	162.6	150.8	68.7	162.2	125.92761	77	77	77		1.001	16.903	1582
301	48.608	48.923		0.16	0.16	1.34	1.08	0.35	90	90	77	1.98	1.5	77	0.016	99	99	179.0	0.05	2.15	15.4314137	92.9	162.1	150.3	68.7	161.7	125.87619	77	77	77		1.001	17.876	1663
302	48.770	49.087		0.16	0.16	1.33	1.07	0.35	90	90	77	1.98	1.5	91	0.017	96	97	178.5	0.41	2.15	15.451766	92.5	161.6	149.9	68.7	161.2	158.12949	78	79	77		1.001	17.872	1655
303	48.932	49.249		0.16	0.16	1.33	1.07	0.35	90	90	77	1.99	1.5	92	0.016	99	99	177.8	0.70	2.03	15.4005289	92.1	161.2	149.6	68.7	160.8	172.75266	79	79	77		1.001	16.899	1558
304	49.094	49.412		0.16	0.16	1.33	1.07	0.35	90	90	76	2	1.5	92	0.016	99	100	177.3	0.52	2.15	15.402379	91.6	160.7	149.2	68.7	160.4	183.56171	79	79	76		1.001	17.873	1639
305	49.256	49.574		0.16	0.16	1.33	1.07	0.35	90	90	76	1.99	1.5	94	0.014	106	106	176.7	0.58	2.05	15.39293	91.3	160.4	148.9	68.7	160.0	194.27968	79	79	76		1.001	17.063	1560
306	49.417	49.737		0.16	0.16	1.33	1.07	0.35	90	90	76	1.99	1.5	96	0.016	99	100	176.3	0.47	2.09	15.364006	91.3	160.4	148.8	68.7	160.0	203.00307	79	79	76		1.001	17.389	1589
307	49.579	49.900		0.16	0.16	1.33	1.07	0.35	90	90	76	2	1.5	98	0.016	100	100	175.6	0.65	2.09	15.3950624	91.5	160.6	149.0	68.7	160.2	209.57988	79	79	76		1.001	17.391	1593
308	49.741	50.062		0.16	0.16	1.33	1.07	0.35	90	90	76	2	1.5	99	0.015	103	103	175.2	0.41	2.13	15.3155708	91.6	160.7	149.1	68.7	160.3	215.31715	79	79	76		1.001	17.713	1624
309	49.903	50.225		0.16	0.16	1.34	1.07	0.35	90	90	76	2	1.5	101	0.014	107	108	174.6	0.61	2.13	15.3356571	91.8	160.9	149.1	68.7	160.5	221.62018	80	80	76		1.001	17.713	1628
310	50.064	50.387		0.16	0.16	1.34	1.07	0.35	90	90	77	1.99	1.5	103	0.015	103	103	174.0	0.60	2.13	15.469327	92.0	161.1	149.3	68.7	160.7	227.0323	80	80	77		1.001	17.713	1632
311	50.226	50.551		0.16	0.16	1.33	1.07	0.35	90	90	77	2	1.5	104	0.015	104	105	173.4	0.58	2.15	15.3551407	92.4	161.5	149.6	68.7	161.1	232.0032	80	81	77		1.001	17.874	1653
312	50.387	50.713		0.16	0.16	1.33	1.07	0.35	90	90	77	2.01	1.5	106	0.016	100	100	172.8	0.57	2.13	15.5078268	92.7	161.9	150.0	68.7	161.4	236.90051	81	81	77		1.001	17.711	1644
313	50.549	50.875		0.16	0.16	1.33	1.07	0.35	90	90	77	2.01	1.5	106	0.016	101	100	172.2	0.63	2.13	15.3839054	93.1	162.2	150.3	68.7	161.8	241.04187	81	81	77		1.001	17.710	1651
314	50.710	51.037		0.16	0.16	1.33	1.07	0.35	90	90	77	2.01	1.5	108	0.015	103	104	171.5	0.74	2.17	15.4077587	93.4	162.5	150.5	68.7	162.1	244.91663	82	82	77		1.001	18.033	1686
315	50.871	51.199		0.16	0.16	1.33	1.07	0.35	90	90	77	2.01	1.5	108	0.017	97	98	171.0	0.46	2.15	15.3613653	94.0	163.2	151.0	68.7	162.7	247.36249	82	82	77		1.001	17.872	1682
316	51.033	51.361		0.16	0.16	1.33	1.06	0.35	90	89	77	2.02	1.5	108	0.015	104	104	170.4	0.59	2.11	15.37673	94.4	163.6	151.4	68.7	163.1	247.38686	82	82	77		1.001	17.550	1658
317	51.194	51.522		0.16	0.16	1.33	1.06	0.35	90	90	77	2.02	1.5	107	0.016	100	100	169.8	0.59	2.23	15.4314451	95.1	164.3	151.9	68.7	163.8	247.16036	82	82	77		1.001	18.519	1763
318	51.355	51.684		0.16	0.16	1.34	1.07	0.35	90	90	77	2.03	1.5	107	0.016	100	101	169.1	0.74	2.21	15.4696293	95.7	164.9	152.3	68.7	164.4	247.72583	82	83	77		1.001	18.357	1759
319	51.516	51.846		0.16	0.16	1.33	1.06	0.35	90	90	77	2.02	1.5	107	0.015	103	104	168.3	0.76	2.15	15.4262648	96.3	165.5	152.8	68.7	165.0	247.87294	83	83	77		1.001	17.872	1723
320	51.677	52.007		0.16	0.16	1.33	1.06	0.35	90	90	77	2.03	1.5	107	0.017	97	97	167.8	0.55	2.11	15.4890184	96.9	166.1	153.3	68.7	165.6	248.41556	83	83	77		1.001	17.549	1702
321	51.838	52.169		0.16	0.16	1.33	1.06	0.35	90	90	77	2.03	1.5	107	0.015	103	104	167.1	0.68	2.17	15.4602861	97.6	166.8	154.0	68.7	166.3	249.7054	83	83	77		1.001	18.034	1763
322	51.999	52.330		0.16	0.16	1.33	1.06	0.35	90	89	77	2.04	1.5	108	0.017	97	97	166.5	0.58	2.13	15.3306131	98.2	167.4	154.4	68.6	166.9	250.95355	83	83	77		1.001	17.707	1741
323	52.160	52.492		0.16	0.16	1.33	1.05	0.35	90	89	77	2.04	1.6	109	0.016	100	101	165.8	0.70	2.19	15.4605951	98.8	168.0	154.9	68.6	167.4	251.97607	84	84	77		1.001	18.195	1800
324	52.321	52.652		0.16	0.16	1.33	1.05	0.35	90	89	77	2.04	1.6	109	0.015	104	103	165.3	0.54	2.15	15.3169956	99.4	168.6	155.5	68.6	168.1	251.38475	84	84	77		1.001	17.873	1779
325	52.481	52.813		0.16	0.16	1.33	1.06	0.35	90	89	77	2.02	1.6	109	0.015	103	104	164.5	0.75	2.23	15.4605722	100.0	169.2	156.0	68.6	168.7	250.72614	84	84	77		1.001	18.520	1855
326	52.642	52.974		0.16	0.16	1.33	1.06	0.35	90	89	77	2.02	1.6	108	0.015	103	103	164.0	0.54	2.19	15.4511347	100.5	169.7	156.4	68.6	169.1	250.79086	84	84	77		1.001	18.198	1832
327	52.803	53.136		0.16	0.16	1.33	1.05	0.35	90	89	77	2.04	1.6	108	0.016	100	101	163.3	0.67	2.21	15.3929548	101.3	170.5	157.2	68.6	169.9	251.53317	84	84	77		1.001	18.359	1862
328	52.964	53.296		0.16	0.16	1.33	1.05	0.35	90	89	77	2.03	1.6	109	0.015	104	103	162.6	0.75	2.15	15.3910351	101.8	171.0	157.5	68.6	170.4	253.34808	84	84	77		1.001	17.868	1821
329	53.125	53.456		0.16	0.16	1.33	1.05	0.35	90	89	77	2.04	1.6	110	0.016	100	100	162.0	0.54	2.11	15.443367	102.3	171.4	157.9	68.6	170.9	254.73409	84	85	77		1.001	17.548	1797
330	53.285	53.618		0.16	0.16	1.32	1.04	0.35	90	89	77	2.04	1.6	109	0.016	100	101	161.4	0.64	2.23	15.4023409	102.9	172.1	158.6	68.6	171.5	254.53539	84	85	77		1.001	18.520	1909
331	53.446	53.777		0.16	0.16	1.32	1.04	0.35	90	89	77	2.05	1.6	108	0.016	100	99	160.7	0.69	2.23	15.4509096	103.5	172.6	159.0	68.6	172.1	252.74048	84	85	77		1.001	18.518	1918
332	53.607	53.938		0.16	0.16	1.32	1.04	0.35	90	89	77	2.03	1.6	107	0.017	97	97	159.9	0.79	2.09	15.4695883	103.9	173.0	159.6	68.6	172.5	251.98511	84	85	77		1.001	17.385	1809
333	53.767	54.099		0.16	0.16	1.33	1.04	0.35	90	89	77	2.05	1.6	108	0.016	100	100	159.4	0.48	2.13	15.4272537	104.6	173.7	160.0	68.6	173.1	252.31867	84	84	77		1.001	17.733	1856
334	53.928	54.258		0.16	0.16	1.32	1.04	0.35	90	89	77	2.05	1.6	108	0.017	97	96	158.8	0.60	2.20	15.4222288	105.1	174.2	160.6	68.6	173.7	253.24036	84	85	77		1.001	18.270	1922
335	54.089	54.418		0.16	0.16	1.32	1.04	0.35	90	90	77	2.04	1.6	108	0.014	107	106	158.1	0.79	2.13	15.4209127	105.6	174.7	161.0	68.6	174.2	253.49829	84	85	77		1.001	17.708	1872
336	54.249	54.579		0.16	0.16	1.32	1.04	0.35	90	90	77	2.04	1.60	108	0.015	103	103	157.4	0.67	2.19	15.4383297	106.2	175.4	161.6	68.6	174.8	254.24945	84	85	77		1.001	18.195	1935
337	54.409	54.737		0.16	0.16	1.32	1.04	0.35	90	89	77	2.04	1.60	108	0.016	100	98	156.8	0.57	2.22	15.2974482	106.7	175.8	161.9	68.6	175.3	254.71372	84	85	77		1.001	18.437	1969
338	54.570	54.897		0.16	0.16	1.32	1.04	0.35	90	89	77	2.04	1.60	108	0.016	100	100	156.2	0.59	2.21	15.3891268	107.4	176.5	162.5	68.6	175.9	254.74591	84	85	77		1.001	18.386	1976
339	54.730	55.056		0.16	0.16	1.31	1.01	0.35	90	90	77	2.06	1.60	108	0.016	100	99	155.5	0.71	2.14	15.3169117	107.9	177.0	163.0	68.5	176.4	254.89606	84	85	77		1.001	17.792	1922
340	54.890	55.214		0.16	0.16	1.31	1.02	0.35	90	89	77	2.05	1.60	108	0.015	103	102	154.8	0.75	2.10	15.4693336	108.4	177.5	163.4	68.5	177.0	255.68707	84	85	77		1.001	17.500	1900
341	55.050	55.373		0.16	0.16	1.31	1.02	0.35	90	89	77	2.06	1.60	108	0.016	100	99	154.4	0.40	2.14	15.2974892	108.9	178.1	163.9	68.5	177.5	256.047	84	85	77		1.001	17.845	1946
342	55.210	55.531		0.16	0.16	1.32	1.01	0.35	90	90	77	2.04	1.60	108	0.016	100	98	153.6	0.72	2.11	15.4406853	109.4	178.5	164.3	68.5	177.9	256.33356	84	85	77		1.001	17.519	1919
343	55.370	55.689		0.16	0.16	1.32	1.02	0.35	90	90	77	2.05	1.60	108	0.016	100	98	153.2	0.50	2.13	15.4510622	110.0	179.0	164.8	68.5	178.5	256.5405	84	85	77		1.001	17.718	1951
344	55.531	55.848		0.16	0.16	1.32	1.01	0.35	90	90	77	2.04	1.60	109	0.015	104	102	152.6	0.59	2.05	15.3557091	110.5	179.5	165.2	68.5	179.0	256.84921	84	85	77		1.001	17.064	1887
345	55.691	56.005		0.16	0.16	1.32	1.01	0.35	90	90	77	2.04	1.70	109	0.015	103	101	151.9	0.62	2.15	15.4316549	111.0	180.1	165.7	68.5	179.6	257.12589	84	85	77		1.001	17.871	1987
346	55.851	56.163		0.16	0.16	1.32	1.00	0.35	90	90	77	2.03	1.70	109	0.015	103	101	151.2	0.73	2.07	15.4780579	111.7	180.8	166.3	68.5	180.2	257.76337	84	84	77		1.001	17.227	1926
347	56.012	56.320		0.16	0.16	1.32	1.01	0.35	90	90	77	2.05	1.70	109	0.016	100	98	150.8	0.45	2.07	15.336524	112.0	181.1	166.6	68.5	180.6	258.37344	84	84	77		1.001	17.245	1934
348	56.172	56.477		0.16	0.16	1.33	1.01	0.35	90	90	77	2.05	1.70	109	0.015	103	101	150.3	0.51	2.15	15.4602699	112.5	181.6	167.0	68.5	181.0	258.90628	84	84	77		1.001	17.860	2012
349	56.333	56.635		0.16	0.16	1.32	1.00	0.35	90	90	77	2.03	1.60	95	0.015	102	100	149.7	0.60	2.11	15.4028568	113.1	182.2	167.5	68.5	181.6	242.2989	83	83	77		1.001	17.596	1993
350	56.494	56.793		0.16	0.16	1.32	1.01	0.35	90	90	77	2.02	1.60	89	0.015	102	100	149.3	0.32	2.15	15.3523979	113.5	182.6	167.9	68.5	182.0	227.76706	82	83	77		1.001	17.868	2031
351	56.655	56.952		0.16	0.16	1.32	1.01	0.35	90	90	77	2.03	1.60	86	0.016	98	97	148.9	0.39	2.20	15.4965429	113.6	182.6	167.9	68.5	182.1	219.90035	82	82	77		1.001	18.347	2087
352	56.816	57.109		0.16	0.16	1.32	1.00	0.35	90	89	77	2.03	1.60	85	0.015	101	99	148.8	0.14	2.15	15.4680853	113.6	182.6	167.9	68.5	182.1	213.60057	81	81	77		1.001	17.874	2032
353	56.977	57.268		0.16	0.16	1.32	1.01	0.35	90	90	77	2.01	1.60	85	0.015	101	100	148.5	0.29	2.15	15.4197922	113.5	182.5	167.8	68.5	182.0	206.8306	80	80	77		1.001	17.868	2030
354	57.138	57.427		0.16	0.16	1.32	1.01	0.35	90	90	77	2.03	1.60	84	0.016	98	97	148.4	0.11	2.15	15.478941	113.3	182.3	167.7	68.5	181.8	201.8905	80	80	77		1.001	17.872	2027
355	57.300	57.585		0.16	0.16	1.32	1.01	0.35	90	90	77	2.01	1.60	83	0.014	105	103	148.2	0.17	2.11	15.4692869	113.1	182.1	167.5	68.5	181.6	198.25322	79	79	77		1.001	17.546	1987
356	57.461	57.744		0.16	0.16	1.33	1.02	0.35	90	90	77	2.02	1.60	83	0.015	101	100	148.3	-0.03	2.13	15.3715782	112.9	181.9	167.3	68.5	181.4	195.23245	79	79	77		1.001	17.709	2001
357	57.623	57.903		0.16	0.16	1.33	1.02	0.35	90	90	77	2.01	1.60	82	0.015	102	100	148.1	0.18	2.22	15.4300013	112.7	181.7	167.1	68.5	181.2	192.66095	78	78	77		1.001	18.512	2088
358	57.784	58.062		0.16	0.16	1.33	1.02	0.35	90	90	77	2.01	1.60	81	0.015	101	100	147.9	0.13	2.11	15.4310236	112.4	181.4	166.9	68.5	180.9	191.00191	78	78	77		1.001	17.545	1975
359	57.946	58.222		0.16	0.16	1.33	1.02	0.35	90	90	77	2.00	1.60	80	0.015	102	100	147.9	0.00	2.07	15.3452301	112.2	181.2	167.2	68.5	180.7	189.15288	77	77	77		1.001	17.224	1935

Elapsed Time	Particulate Sampling Data																		Fuel Weight, lb		Flow, gpm		Temperature Data, oF												
	Gas Meter Cubic Feet (1)	Gas Meter Cubic Feet (2)	Gas Meter Cubic Feet (amb)	Sample Rate, cfm (1)	Sample Rate, cfm (2)	Orifice dH (1)	Orifice dH (2)	Orifice dH (amb)	Meter oF (1)	Meter oF (2)	Meter oF (amb)	Meter Vac. In. Hg. (1)	Meter Vac. In. Hg. (2)	Dilution Tunnel Temp.	Dilution Tunnel dP	Pro. Rate (%) (1)	Pro. Rate (%) (2)	Scale Reading	Weight Change	Load Side Liquid Flow Rate	Boiler Side Liquid Flow Rate (optional)	Thermopile ΔT	Boiler to Heat Exch. Temp.	Heat Exch to Boiler Temp.	Inlet Load Temp.	Outlet Load Temp.	Stack	Filter (1)	Filter (2)	Ambient		Specific Heat of Inlet Water (BTU/lb-°F)	Mass Flow Rate of Inlet Water (lb/min)	Heat Output, Btu
360	58.107	58.382		0.16	0.16	1.33	1.03	0.35	90	90	77	2.00	1.60	80	0.016	98	97	147.9	0.07	2.11	15.4298792	112.0	180.9	166.9	68.5	180.5	186.91898	77	77	77		1.001	17.543	1966
361	58.269	58.542		0.16	0.16	1.33	1.04	0.35	90	90	77	2.00	1.60	79	0.015	101	100	147.8	0.07	2.03	15.4788465	111.7	180.6	166.7	68.5	180.2	184.58479	76	77	77		1.001	16.899	1889
362	58.431	58.703		0.16	0.16	1.33	1.04	0.35	90	90	77	2.00	1.60	79	0.016	98	97	147.8	0.04	2.07	15.4854965	111.4	180.3	166.5	68.5	179.9	182.10657	76	77	77		1.001	17.226	1921
363	58.593	58.864		0.16	0.16	1.33	1.04	0.35	90	90	77	2.01	1.50	79	0.017	95	95	147.8	-0.05	2.01	15.4573946	111.0	180.0	166.1	68.5	179.5	179.81096	76	77	77		1.001	16.738	1861
364	58.755	59.024		0.16	0.16	1.33	1.05	0.35	90	90	77	1.99	1.50	79	0.015	101	100	147.7	0.10	2.11	15.3933744	110.7	179.7	165.8	68.5	179.2	177.49394	76	77	77		1.001	17.547	1945
365	58.917	59.186		0.16	0.16	1.33	1.05	0.35	90	90	77	1.99	1.50	79	0.017	95	95	147.7	0.00	2.09	15.4649897	110.5	179.4	165.7	68.4	178.9	175.54067	76	77	77		1.001	17.385	1923
366	59.079	59.348		0.16	0.16	1.33	1.05	0.35	90	90	77	2.00	1.50	79	0.016	98	98	147.7	0.02	2.13	15.4119453	110.3	179.1	165.3	68.4	178.6	173.58499	77	77	77		1.001	17.710	1955
367	59.241	59.510		0.16	0.16	1.33	1.05	0.35	90	90	77	2.00	1.50	79	0.016	98	98	147.8	-0.08	2.09	15.4248266	110.0	178.8	165.1	68.3	178.3	171.70917	77	77	77		1.001	17.385	1914
368	59.403	59.671		0.16	0.16	1.33	1.06	0.35	90	89	77	2.00	1.50	79	0.014	105	104	147.7	0.04	2.07	15.4769421	109.7	178.5	164.8	68.3	178.0	169.75543	77	77	77		1.001	17.224	1892
369	59.565	59.834		0.16	0.16	1.33	1.06	0.35	90	89	77	2.00	1.50	79	0.016	98	99	147.8	-0.04	2.01	15.4233618	109.4	178.1	164.4	68.3	177.6	167.89409	77	77	77		1.001	16.740	1833
370	59.726	59.997		0.16	0.16	1.33	1.05	0.35	90	89	77	2.00	1.50	79	0.016	98	99	147.8	-0.02	2.03	15.4984245	109.0	177.7	164.1	68.2	177.3	166.17281	77	77	77		1.001	16.903	1845
371	59.888	60.159		0.16	0.16	1.33	1.06	0.35	90	89	77	1.98	1.50	79	0.015	101	101	147.7	0.10	2.17	15.3928986	108.7	177.3	163.8	68.2	176.9	164.38437	77	77	77		1.001	18.033	1962
372	60.050	60.322		0.16	0.16	1.34	1.06	0.35	90	89	77	2.00	1.50	78	0.015	101	102	147.8	-0.06	2.03	15.3647318	108.3	176.9	163.4	68.1	176.5	162.62747	77	77	77		1.001	16.901	1833
373	60.212	60.484		0.16	0.16	1.33	1.06	0.35	90	89	77	2.00	1.50	78	0.016	98	98	147.7	0.06	2.07	15.4332438	108.0	176.5	163.0	68.0	176.1	161.08241	77	77	77		1.001	17.224	1863
374	60.374	60.648		0.16	0.16	1.33	1.06	0.35	90	89	77	1.99	1.50	78	0.015	101	103	147.7	0.03	2.07	15.4315042	107.8	176.2	162.7	67.9	175.7	159.52176	77	77	77		1.001	17.228	1860
375	60.536	60.811		0.16	0.16	1.33	1.07	0.35	90	89	77	1.98	1.50	78	0.016	98	99	147.7	-0.06	2.03	15.4221945	107.4	175.6	162.2	67.8	175.2	157.98714	77	77	77		1.001	16.901	1817
376	60.699	60.973		0.16	0.16	1.34	1.06	0.35	90	89	77	1.98	1.50	78	0.015	102	101	147.7	-0.03	2.03	15.4538183	107.1	175.3	161.9	67.7	174.8	156.48775	77	77	77		1.001	16.901	1813
377	60.861	61.136		0.16	0.16	1.33	1.06	0.35	90	89	77	2.00	1.50	78	0.016	98	99	147.8	-0.05	2.05	15.4038219	106.8	174.9	161.7	67.6	174.5	154.97691	77	77	77		1.001	17.065	1825
378	61.023	61.299		0.16	0.16	1.33	1.07	0.35	90	89	77	1.98	1.50	78	0.015	101	102	147.6	0.15	1.95	15.4408245	106.5	174.5	161.2	67.6	174.0	153.46918	77	77	77		1.001	16.254	1733
379	61.185	61.463		0.16	0.16	1.33	1.06	0.35	90	89	77	1.98	1.50	78	0.015	101	103	147.8	-0.17	2.07	15.4127502	106.2	174.1	160.9	67.5	173.7	152.08173	77	77	77		1.001	17.229	1832
380	61.347	61.626		0.16	0.16	1.33	1.07	0.35	90	89	77	1.98	1.50	78	0.016	98	99	147.8	0.05	2.15	15.4693995	105.8	173.7	160.5	67.4	173.2	150.67578	77	77	77		1.001	17.876	1893
381	61.509	61.788		0.16	0.16	1.33	1.07	0.35	90	89	77	1.98	1.50	78	0.017	95	95	147.9	-0.13	2.05	15.3548546	105.5	173.3	160.2	67.3	172.8	149.39453	77	77	77		1.001	17.066	1802
382	61.671	61.951		0.16	0.16	1.33	1.07	0.35	90	89	77	2.00	1.50	78	0.016	98	99	147.8	0.08	2.09	15.4696455	105.1	172.8	159.7	67.3	172.3	148.02721	77	77	77		1.001	17.391	1829
383	61.833	62.114		0.16	0.16	1.33	1.07	0.35	90	89	77	1.98	1.50	78	0.015	101	102	147.9	-0.08	2.11	15.3928833	104.7	172.3	159.3	67.2	171.9	146.82842	77	77	77		1.001	17.579	1842
384	61.995	62.278		0.16	0.16	1.33	1.07	0.35	90	89	77	1.99	1.50	78	0.018	92	94	147.9	0.04	2.13	15.4023209	104.3	172.0	159.0	67.1	171.5	145.67053	77	77	77		1.001	17.715	1851
385	62.157	62.441		0.16	0.16	1.33	1.07	0.35	90	89	77	1.98	1.50	78	0.015	101	102	147.9	-0.08	2.12	15.489028	104.0	171.5	158.6	67.1	171.0	144.56149	77	77	77		1.001	17.647	1837
386	62.320	62.604		0.16	0.16	1.32	1.06	0.35	90	89	77	1.99	1.50	78	0.016	99	99	148.0	-0.02	2.11	15.4220457	103.6	171.1	158.2	67.0	170.7	143.48029	77	77	77		1.001	17.556	1822
387	62.482	62.767		0.16	0.16	1.33	1.07	0.35	90	89	77	1.99	1.50	77	0.017	95	96	147.8	0.14	2.08	15.440732	103.2	170.7	157.9	67.0	170.2	142.33424	77	77	77		1.001	17.352	1793
388	62.644	62.930		0.16	0.16	1.33	1.07	0.35	90	89	77	1.98	1.50	77	0.015	101	102	148.1	-0.28	2.13	15.3981905	102.8	170.2	157.4	67.0	169.7	141.43626	77	77	77		1.001	17.766	1828
389	62.807	63.094		0.16	0.16	1.33	1.07	0.35	90	89	77	1.99	1.50	78	0.015	102	103	148.0	0.10	2.09	15.4313078	102.4	169.9	157.1	67.0	169.4	140.41415	77	77	77		1.001	17.393	1783
390	62.968	63.257		0.16	0.16	1.33	1.07	0.35	90	89	77	1.98	1.50	78	0.016	97	99	147.9	0.08	2.08	15.4711237	101.9	169.3	156.6	67.0	168.8	139.36601	77	77	77		1.001	17.339	1768
391	63.131	63.420		0.16	0.16	1.33	1.07	0.35	90	89	76	1.98	1.50	78	0.016	99	99	147.9	0.01	2.13	15.2914829	101.5	168.9	156.3	67.0	168.5	138.58948	77	77	76		1.001	17.692	1798
392	63.293	63.582		0.16	0.16	1.33	1.07	0.35	90	89	77	1.99	1.50	77	0.015	101	101	148.1	-0.15	1.99	15.4606895	101.1	168.5	155.9	67.0	168.0	137.5204	77	77	77		1.001	16.603	1680
393	63.455	63.746		0.16	0.16	1.33	1.07	0.35	90	89	77	2.00	1.50	77	0.016	98	99	147.9	0.12	2.03	15.421751	100.6	168.0	155.5	67.0	167.6	136.87793	77	77	77		1.001	16.927	1705
394	63.617	63.909		0.16	0.16	1.34	1.07	0.35	90	89	77	1.99	1.50	77	0.016	98	99	148.1	-0.17	2.01	15.4309273	100.1	167.5	155.0	67.0	167.1	136.05473	77	77	77		1.001	16.736	1678
395	63.779	64.072		0.16	0.16	1.33	1.07	0.35	90	89	77	1.99	1.50	77	0.017	95	96	148.0	0.08	2.07	15.4191408	99.8	167.2	154.7	67.0	166.7	135.45276	77	77	77		1.001	17.217	1720
396	63.941	64.235		0.16	0.16	1.34	1.07	0.35	90	89	77	1.98	1.50	77	0.016	98	99	148.1	-0.05	2.03	15.4688921	99.3	166.7	154.2	66.9	166.2	134.49219	77	77	77		1.001	16.913	1681
397	64.103	64.398		0.16	0.16	1.34	1.07	0.35	90	89	77	1.98	1.50	77	0.015	101	102	148.1	0.03	2.09	15.4406557	98.9	166.3	154.0	66.9	165.8	133.56009	77	77	77		1.001	17.374	1720
398	64.265	64.561		0.16	0.16	1.33	1.07	0.35	90	89	76	2.00	1.50	77	0.014	105	105	148.0	0.07	1.99	15.4312744	98.4	165.8	153.5	66.9	165.4	132.90421	77	77	76		1.001	16.596	1635
399	64.427	64.724		0.16	0.16	1.33	1.07	0.35	90	89	77	1.98	1.50	77	0.016	98	99	148.2	-0.18	2.15	15.3621759	98.0	165.4	153.2	66.9	164.9	132.43689	77	77	77		1.001	17.874	1753
400	64.589	64.888		0.16	0.16	1.34	1.07	0.35	90	89	77	1.99	1.50	77	0.015	101	103	148.1	0.07	2.07	15.3769569	97.6	165.0	152.9	66.9	164.5	131.86556	77	77	77		1.001	17.231	1684
401	64.751	65.051		0.16	0.16	1.34	1.07	0.35	90	89	77	1.98	1.50	77	0.015	101	102	148.1	-0.01	2.03	15.4693832	97.1	164.5	152.4	66.9	164.1	130.91596	77	77	77		1.001	16.910	1644
402	64.913	65.213		0.16	0.16	1.33	1.07	0.35	90	89	77	1.99	1.50	77	0.015	101	101	148.3	-0.19	2.05	15.3456173	96.7	164.0	152.0	66.9	163.6	130.13727	77	77	77		1.001	17.067	1651
403	65.075	65.377		0.16	0.16	1.34	1.07	0.35	90	89	77	1.99	1.50	77	0.017	95	96	148.1	0.22	2.15	15.4082909	96.2	163.6	151.6	66.9	163.2	129.41649	77	77	77		1.001	17.878	1722
404	65.237	65.540		0.16	0.16	1.34	1.07	0.35	90	89	76	1.98	1.50	77	0.014	105	105	148.1	-0.01	2.07	15.4396124	95.8	163.2	151.3	66.9	162.8	128.9725	77	77	76		1.001	17.228	1653
405	65.399	65.703		0.16	0.16	1.34	1.07	0.35	90	89	77	1.99	1.50	77	0.015	101	102	148.2	-0.14	2.05	15.4022446	95.4	162.8	150.9	66.9	162.3	127.94742	77	77	77		1.001	17.069	1630
406	65.561	65.866		0.16	0.16	1.34	1.07	0.35	90	89	77	1.98	1.50	77	0.016	98	99	148.2	0.06	2.03	15.3751411	94.9	162.3	150.4	66.9	161.8	127.34323	77	77	77		1.001	16.909	1606
407	65.723	66.028		0.16	0.16	1.33	1.06	0.35	90	89	77	1.99	1.50	89	0.015	102	102	147.9	0.30	2.09	15.4276915	94.5	161.8	150.1	66.9	161.4	155.46373	78	78	77		1.001	17.395	1645
408	65.885	66.191		0.16	0.16	1.33	1.06	0.35	90	89	77	1.99	1.50	91	0.016	99	100	147.4	0.48	2.07	15.4453478	93.9	161.3	149.6	66.9	160.9	171.87822	79	79	77		1.001	17.232	1621
409	66.046	66.354		0.16	0.16	1.33	1.06	0.35	90	89	76	2.01	1.50	92	0.017	96	97	146.8	0.63	2.01	15.2785769	93.5	160.9	149.3	66.9	160.5	184.0943	78	79	76		1.001	16.746	1568
410	66.208	66.516		0.16	0.16	1.34	1.06	0.35	90	89	77	2.01	1.50	94	0.015	103	103	146.2	0.60	2.03	15.4313307	93.3	160.7	149.1	66.9	160.2	197.69969	78	79	77		1.001	16.907	1579
411	66.369	66.678		0.16	0.16	1.33	1.07	0.35	90	89	77	2.01	1.50	97	0.015	102	103	145.7	0.50	2.07	15.4511147	93.2	160.6	148.9	66.9	160.1	210.42477	78	78	77		1.001	17.230	1608
412	66.531	66.840		0.16	0.16	1.34	1.07	0.35	90	89	76	2.00	1.50	99	0.016	100	100	145.0	0.63	2.17	15.4127007	93.3	160.7	149.0	66.9	160.2	219.47701	78	79	76		1.001	18.040	1685
413	66.692	67.003		0.16	0.16	1.34	1.07	0.35	90	89	76	2.00	1.50	101	0.014	106	108	144.5	0.53	2.11	15.4493608	93.6	161.0	149.2	66.9	160.5	227.18965	79	79	76		1.001	17.554	1644
414	66.854	67.165		0.16	0.16	1.34	1.07	0.35	90	89	77	2.01	1.50	103	0.016	100	100	144.1	0.40	2.11	15.3454008	93.9	161.3	149.5	66.9	160.8	233.90482	79	79	77		1.001	17.552	1650
415	67.015	67.327		0.16	0.16	1.34	1.07	0.35	90	89	76	1.99	1.50	105	0.016	100	101	143.4	0.66	2.01	15.3639231	94.1	161.5	149.7	66.9	161.0	239.04724	79	80	76		1.001	16.743	1577
416	67.177	67.489		0.16	0.16	1.35	1.08	0.35	90	89	76	2.01	1.50	106	0.017	98	98	142.9	0.54	2.09	15.4531565	94.4	161.8	150.0	66.9	161.3	243.13309	80	80	76		1.001	17.394	1644
417	67.338	67.652		0.16	0.16	1.34	1.07	0.35	90	89	76	2.01	1.50	106	0.017	97	98	142.3	0.62	2.01	15.431159	94.8	162.3	150.4	66.9	161.8	245.46687	80	80	76		1.001	16.744	1590
418	67.500	67.815		0.16	0.16	1.34	1.07	0.35	90	89	76	2.00	1.50	107	0.016	101	101	141.7	0.61	2.03	15.4274931	95.3	162.8	150.8	66.9	162.2	247.46574	80	80	76		1.001	16.908	1614
419	67.661	67.977		0.16	0.16	1.34	1.07	0.35	90	89	76	2.00	1.50	108	0.015	103	104	141.1	0.57	2.09	15.3842831	95.9	163.4	151.4	66.9	162.8	249.62181	80	81	76		1.001	17.393	1670
420	67.823	68.139		0.16	0.16	1.34	1.07	0.35	90	89	77	2.01	1.50	108	0.015	104	104	140.5	0.62	2.11	15.3852005	96.6	164.1	152.0	66.9	163.5	251.06108	80	81	77		1.001	17.553	1698
421	67.984	68.301		0.16	0.16	1.34	1.07	0.35	90	89	76	2.01	1.50	109	0.016	100	101	139.8	0.62	2.01	15.4313173	97.3	164.7	152.5	66.9	164.2	252.54063	81	81	76		1.001	16.744	1630

Elapsed Time	Particulate Sampling Data																	Fuel Weight, lb		Flow, gpm		Temperature Data, oF												
	Gas Meter Cubic Feet (1)	Gas Meter Cubic Feet (2)	Gas Meter Cubic Feet (amb)	Sample Rate, cfm (1)	Sample Rate, cfm (2)	Orifice dH (1)	Orifice dH (2)	Orifice dH (amb)	Meter oF (1)	Meter oF (2)	Meter oF (amb)	Meter Vac. In. Hg. (1)	Meter Vac. In. Hg. (2)	Dilution Tunnel Temp.	Dilution Tunnel dP	Pro. Rate (%) (1)	Pro. Rate (%) (2)	Scale Reading	Weight Change	Load Side Liquid Flow Rate	Boiler Side Liquid Flow Rate (optional)	Thermopile ΔT	Boiler to Heat Exch. Temp.	Heat Exch to Boiler Temp.	Inlet Load Temp.	Outlet Load Temp.	Stack	Filter (1)	Filter (2)	Ambient		Specific Heat of Inlet Water (BTU/lb-°F)	Mass Flow Rate of Inlet Water (lb/min)	Heat Output, Btu
422	68.146	68.464		0.16	0.16	1.34	1.07	0.35	90	89	77	2.00	1.50	109	0.016	101	102	139.5	0.31	2.01	15.4020643	97.9	165.4	153.1	66.9	164.8	252.99141	81	81	77		1.001	16.745	1641
423	68.307	68.626		0.16	0.16	1.34	1.07	0.35	90	89	77	2.00	1.50	109	0.016	100	101	138.7	0.84	2.15	15.4348593	98.6	166.1	153.7	66.9	165.5	253.61646	81	81	77		1.001	17.876	1765
424	68.468	68.788		0.16	0.16	1.34	1.07	0.35	90	89	76	2.02	1.50	110	0.017	97	98	138.2	0.44	1.99	15.4268951	99.3	166.7	154.3	66.9	166.2	254.44008	81	82	76		1.001	16.594	1650
425	68.630	68.950		0.16	0.16	1.34	1.07	0.35	90	89	76	2.02	1.50	109	0.016	101	101	137.5	0.74	2.11	15.4031677	99.9	167.4	154.8	66.9	166.8	255.49162	81	82	76		1.001	17.553	1756
426	68.791	69.113		0.16	0.16	1.33	1.07	0.35	90	89	76	2.02	1.50	110	0.016	100	102	137.1	0.37	2.15	15.4602928	100.6	168.0	155.5	66.9	167.5	257.15189	82	82	76		1.001	17.881	1801
427	68.953	69.275		0.16	0.16	1.33	1.07	0.35	90	89	77	2.02	1.50	110	0.016	101	101	136.4	0.73	2.13	15.4126034	101.2	168.7	156.0	66.9	168.1	256.22492	82	82	77		1.001	17.710	1795
428	69.114	69.436		0.16	0.16	1.34	1.07	0.35	90	89	76	2.02	1.50	111	0.015	104	104	135.9	0.47	2.05	15.4022732	102.0	169.4	156.6	66.9	168.9	258.6185	82	82	76		1.001	17.092	1745
429	69.275	69.598		0.16	0.16	1.34	1.07	0.35	90	89	76	2.03	1.50	112	0.016	101	101	135.1	0.82	2.05	15.4220953	102.7	170.1	157.2	66.9	169.5	260.27124	82	83	76		1.001	17.027	1750
430	69.436	69.760		0.16	0.16	1.34	1.06	0.35	90	89	76	2.02	1.50	111	0.017	97	98	134.8	0.33	2.08	15.4987831	103.3	170.8	157.8	66.9	170.2	259.94235	82	83	76		1.001	17.312	1791
431	69.598	69.922		0.16	0.16	1.34	1.06	0.35	90	89	76	2.03	1.50	110	0.015	104	104	134.1	0.72	2.14	15.3640738	104.1	171.6	158.4	66.9	171.0	259.06131	82	83	76		1.001	17.828	1858
432	69.759	70.083		0.16	0.16	1.34	1.06	0.35	90	89	76	2.02	1.50	110	0.017	97	97	133.6	0.43	2.04	15.4587736	104.7	172.1	159.0	66.9	171.5	259.3519	83	83	76		1.001	17.020	1783
433	69.920	70.245		0.16	0.16	1.33	1.06	0.35	90	89	76	2.03	1.50	110	0.016	100	101	132.9	0.75	2.07	15.3838348	105.3	172.8	159.5	66.9	172.2	259.0144	83	83	76		1.001	17.191	1813
434	70.080	70.407		0.16	0.16	1.33	1.06	0.35	90	89	76	2.03	1.50	111	0.016	100	101	132.2	0.67	2.11	15.4229298	106.0	173.4	160.1	66.9	172.8	259.9267	83	83	76		1.001	17.550	1862
435	70.241	70.569		0.16	0.16	1.33	1.06	0.35	90	89	76	2.02	1.50	111	0.016	100	101	131.6	0.60	2.05	15.4188662	106.6	174.1	160.8	66.9	173.5	261.1572	83	83	76		1.001	17.087	1824
436	70.402	70.729		0.16	0.16	1.33	1.06	0.35	90	89	77	2.03	1.50	111	0.017	97	97	131.0	0.61	2.07	15.3453646	107.4	174.8	161.4	66.9	174.2	261.59631	83	83	77		1.001	17.245	1854
437	70.563	70.891		0.16	0.16	1.33	1.06	0.35	90	89	76	2.04	1.50	113	0.016	101	101	130.4	0.58	2.09	15.3455458	108.0	175.5	161.9	66.9	174.9	264.52408	83	84	76		1.001	17.374	1878
438	70.724	71.053		0.16	0.16	1.32	1.06	0.35	90	89	76	2.03	1.60	113	0.015	104	105	129.8	0.58	2.09	15.4510603	108.7	176.2	162.6	66.9	175.6	265.99561	83	84	76		1.001	17.384	1893
439	70.884	71.213		0.16	0.16	1.31	1.05	0.35	90	89	76	2.02	1.60	113	0.016	100	100	129.0	0.82	2.09	15.4022713	109.5	176.9	163.2	66.9	176.3	265.92654	83	84	76		1.001	17.390	1906
440	71.045	71.374		0.16	0.16	1.32	1.05	0.35	90	89	76	2.02	1.60	113	0.016	101	101	128.6	0.42	2.03	15.4215183	110.1	177.6	163.8	66.9	177.0	265.64661	84	84	76		1.001	16.906	1863
441	71.206	71.535		0.16	0.16	1.32	1.05	0.35	90	89	76	2.04	1.60	112	0.016	101	101	127.9	0.74	2.11	15.4095678	110.7	178.2	164.3	66.9	177.6	263.87399	84	84	76		1.001	17.552	1946
442	71.366	71.696		0.16	0.16	1.32	1.05	0.35	90	89	76	2.02	1.60	112	0.015	103	104	127.2	0.70	2.15	15.3453856	111.3	178.8	164.8	66.9	178.2	265.50473	84	84	76		1.001	17.876	1992
443	71.527	71.856		0.16	0.16	1.32	1.04	0.35	90	89	76	2.05	1.60	113	0.015	104	103	126.4	0.72	2.07	15.4122791	112.1	179.6	165.5	66.9	178.9	266.62775	84	85	76		1.001	17.227	1933
444	71.687	72.017		0.16	0.16	1.31	1.05	0.35	90	89	76	2.04	1.60	113	0.016	100	101	125.6	0.81	2.07	15.3968697	112.7	180.1	166.0	66.9	179.5	267.52234	84	85	76		1.001	17.232	1944
445	71.848	72.178		0.16	0.16	1.32	1.04	0.35	90	89	76	2.05	1.60	114	0.015	104	104	125.0	0.66	2.07	15.3763037	113.2	180.7	166.5	66.9	180.1	268.20108	85	85	76		1.001	17.226	1953
446	72.008	72.337		0.16	0.16	1.32	1.04	0.35	90	89	76	2.05	1.60	114	0.017	97	97	124.4	0.59	2.05	15.3002453	113.9	181.3	167.1	66.9	180.7	268.16483	85	85	76		1.001	17.065	1945
447	72.168	72.498		0.16	0.16	1.33	1.05	0.35	90	89	76	2.03	1.60	111	0.015	103	104	123.7	0.69	2.11	15.4127369	114.4	181.9	167.5	66.9	181.2	265.89862	84	84	76		1.001	17.553	2010
448	72.329	72.659		0.16	0.16	1.32	1.04	0.35	90	89	76	2.04	1.60	94	0.016	99	99	123.3	0.42	2.09	15.4312897	115.0	182.5	168.1	66.9	181.9	242.75028	83	83	76		1.001	17.390	2002
449	72.490	72.819		0.16	0.16	1.32	1.04	0.35	90	89	76	2.02	1.60	90	0.013	109	109	122.8	0.46	2.03	15.4022732	115.3	182.7	168.3	66.9	182.1	229.62791	82	83	76		1.001	16.904	1951
450	72.651	72.979		0.16	0.16	1.32	1.04	0.35	90	89	76	2.03	1.60	87	0.015	102	101	122.5	0.31	2.13	15.3709679	115.4	182.8	168.4	66.9	182.2	220.9673	82	82	76		1.001	17.716	2046
451	72.812	73.140		0.16	0.16	1.32	1.04	0.35	90	89	76	2.03	1.60	87	0.017	95	95	122.2	0.28	2.03	15.4510584	115.3	182.7	168.4	66.9	182.1	214.10773	81	81	76		1.001	16.909	1951
452	72.973	73.301		0.16	0.16	1.32	1.03	0.35	90	89	77	2.02	1.60	85	0.017	95	95	122.2	0.04	2.07	15.3548298	115.2	182.7	168.4	66.9	182.1	208.59024	80	81	77		1.001	17.228	1987
453	73.134	73.461		0.16	0.16	1.33	1.04	0.35	90	89	76	2.01	1.60	84	0.014	105	104	121.9	0.33	2.09	15.4314766	115.1	182.5	168.3	66.8	182.0	204.16994	80	80	76		1.001	17.388	2004
454	73.295	73.622		0.16	0.16	1.33	1.04	0.35	90	89	76	2.02	1.50	83	0.015	101	101	121.8	0.10	2.05	15.424387	114.9	182.3	168.1	66.8	181.7	200.59061	79	80	76		1.001	17.071	1963
455	73.457	73.784		0.16	0.16	1.33	1.04	0.35	90	89	76	2.02	1.50	82	0.015	102	102	121.6	0.16	2.07	15.4508209	114.8	182.1	168.1	66.8	181.6	197.50253	79	80	76		1.001	17.230	1980
456	73.618	73.944		0.16	0.16	1.33	1.05	0.35	90	89	76	2.00	1.50	81	0.016	98	97	121.4	0.16	2.05	15.4313507	114.5	181.9	167.9	66.8	181.4	195.01137	79	79	76		1.001	17.068	1957
457	73.780	74.106		0.16	0.16	1.33	1.05	0.35	90	89	76	1.99	1.50	80	0.015	102	102	121.5	-0.06	2.01	15.4023409	114.3	181.7	167.7	66.9	181.2	193.6424	78	79	76		1.001	16.743	1916
458	73.941	74.268		0.16	0.16	1.32	1.05	0.35	90	89	76	2.00	1.50	79	0.016	98	98	121.5	-0.02	2.01	15.3279428	114.1	181.5	167.5	66.8	180.9	191.64606	78	79	76		1.001	16.745	1913
459	74.103	74.431		0.16	0.16	1.33	1.05	0.35	90	89	76	1.99	1.50	79	0.014	105	106	121.5	0.04	2.05	15.3334351	113.8	181.2	167.3	66.8	180.7	189.36906	78	79	76		1.001	17.066	1945
460	74.265	74.593		0.16	0.16	1.33	1.05	0.35	90	89	76	1.99	1.50	79	0.016	98	98	121.4	0.08	2.07	15.4122877	113.6	181.0	167.1	66.8	180.4	186.94894	78	79	76		1.001	17.230	1960
461	74.427	74.754		0.16	0.16	1.33	1.06	0.35	90	89	76	1.99	1.50	79	0.016	98	98	121.2	0.18	2.03	15.4014711	113.3	180.6	166.8	66.8	180.1	184.62795	78	79	76		1.001	16.905	1917
462	74.588	74.917		0.16	0.16	1.33	1.06	0.35	90	89	76	1.99	1.50	79	0.016	98	99	121.3	-0.09	2.03	15.4406605	113.0	180.4	166.5	66.8	179.9	182.21422	78	79	76		1.001	16.923	1915
463	74.750	75.080		0.16	0.16	1.33	1.06	0.35	90	89	76	2.01	1.50	79	0.016	98	99	121.4	-0.09	2.04	15.4225979	112.7	180.0	166.3	66.8	179.5	179.88307	78	79	76		1.001	16.967	1914
464	74.912	75.242		0.16	0.16	1.33	1.06	0.35	90	89	76	2.00	1.50	78	0.017	95	95	121.3	0.07	1.99	15.3938093	112.4	179.7	166.0	66.8	179.2	177.69551	78	78	76		1.001	16.587	1866
465	75.074	75.405		0.16	0.16	1.33	1.06	0.35	90	89	76	2.01	1.50	78	0.016	98	99	121.3	-0.02	2.07	15.3358192	112.0	179.4	165.6	66.8	178.8	175.58603	78	78	76		1.001	17.252	1935
466	75.235	75.568		0.16	0.16	1.33	1.06	0.35	90	89	76	2.00	1.50	78	0.014	104	106	121.4	-0.04	2.03	15.4690142	111.7	179.0	165.4	66.8	178.5	173.56691	78	78	76		1.001	16.910	1891
467	75.397	75.731		0.16	0.16	1.33	1.07	0.35	90	89	76	2.00	1.50	78	0.016	98	99	121.4	0.00	2.10	15.3837948	111.3	178.7	165.1	66.8	178.2	171.53326	78	78	76		1.001	17.493	1950
468	75.559	75.894		0.16	0.16	1.33	1.06	0.35	90	89	76	1.99	1.50	78	0.014	105	106	121.3	0.11	2.04	15.440424	111.0	178.3	164.6	66.8	177.8	169.61752	78	78	76		1.001	16.947	1883
469	75.721	76.056		0.16	0.16	1.33	1.06	0.35	90	89	76	1.98	1.50	78	0.015	101	101	121.4	-0.17	2.09	15.4124527	110.6	177.9	164.4	66.8	177.4	167.67888	77	78	76		1.001	17.379	1924
470	75.883	76.219		0.16	0.16	1.33	1.06	0.35	90	89	76	1.98	1.50	78	0.015	101	102	121.3	0.12	2.01	15.4405928	110.2	177.6	164.1	66.8	177.1	165.87309	77	78	76		1.001	16.761	1850
471	76.044	76.381		0.16	0.16	1.33	1.06	0.35	90	89	76	2.00	1.50	78	0.017	95	95	121.4	-0.06	2.01	15.4564285	109.8	177.2	163.8	66.8	176.7	164.20114	77	78	76		1.001	16.737	1841
472	76.206	76.545		0.16	0.16	1.33	1.06	0.35	90	89	76	1.99	1.50	78	0.016	98	99	121.4	-0.06	2.13	15.3928871	109.4	176.7	163.4	66.8	176.2	162.39491	77	78	76		1.001	17.712	1940
473	76.368	76.708		0.16	0.16	1.33	1.06	0.35	90	89	76	2.00	1.50	78	0.016	98	99	121.5	-0.05	2.01	15.3838034	109.1	176.4	163.1	66.8	175.9	160.65285	77	78	76		1.001	16.745	1828
474	76.530	76.870		0.16	0.16	1.33	1.06	0.35	90	89	76	1.99	1.50	78	0.016	98	98	121.5	-0.02	2.03	15.4497328	108.6	176.0	162.6	66.8	175.4	159.02715	77	77	76		1.001	16.913	1839
475	76.692	77.033		0.16	0.16	1.33	1.06	0.35	90	89	76	2.00	1.50	78	0.015	101	102	121.6	-0.05	2.09	15.4133949	108.2	175.5	162.3	66.8	175.0	157.47044	77	77	76		1.001	17.388	1883
476	76.854	77.195		0.16	0.16	1.33	1.06	0.35	90	89	76	1.99	1.50	78	0.015	101	101	121.4	0.11	2.05	15.4507895	107.8	175.1	162.0	66.8	174.6	155.95772	77	77	76		1.001	17.068	1842
477	77.015	77.359		0.16	0.16	1.33	1.06	0.35	90	89	76	1.99	1.50	78	0.015	101	103	121.5	-0.10	2.03	15.3638887	107.3	174.7	161.5	66.8	174.1	154.49188	77	77	76		1.001	16.911	1817
478	77.178	77.521		0.16	0.16	1.33	1.06	0.35	90	89	76	1.98	1.50	77	0.016	99	98	121.4	0.19	2.03	15.4788532	106.9	174.3	161.2	66.8	173.8	152.97315	77	77	76		1.001	16.908	1810
479	77.339	77.684		0.16	0.16	1.33	1.07	0.35	90	89	76	1.99	1.50	77	0.016	97	99	121.5	-0.14	1.99	15.3928242	106.5	173.8	160.8	66.8	173.3	151.6324	77	77	76		1.001	16.587	1768
480	77.501	77.846		0.16	0.16	1.33	1.06	0.35	90	89	76	2.00	1.50	77	0.016	98	98	121.6	-0.13	2.09	15.2973871	106.1	173.4	160.5	66.8	172.9	150.18605	77	77	76		1.001	17.395	1849
481	77.663	78.009		0.16	0.16	1.33	1.07	0.35	90	89	76	1.99	1.50	77	0.016	98	99	121.6	0.02	2.13	15.4287119	105.6	172.9	160.1	66.8	172.4	148.84248	77	77	76		1.001	17.718	1874
482	77.825	78.172		0.16	0.16	1.33	1.06	0.35	90	89	76	1.98	1.50	77	0.016	98	99	121.4	0.20	2.09	15.4022646	105.2	172.5	159.7	66.8	172.0	147.5649	77	77	76		1.001	17.395	1832
483	77.987	78.335		0.16	0.16	1.33	1.06	0.35	90	89	76	2.00	1.50	77	0.016	98	99	121.6	-0.18	2.03	15.3944426	104.8	172.1	159.4	66.8	171.6	146.2988	77	77	76		1.001	16.907	1775

Elapsed Time	Particulate Sampling Data																		Fuel Weight, lb		Flow, gpm		Temperature Data, oF												
	Gas Meter Cubic Feet (1)	Gas Meter Cubic Feet (2)	Gas Meter Cubic Feet (amb)	Sample Rate, cfm (1)	Sample Rate, cfm (2)	Orifice dH (1)	Orifice dH (2)	Orifice dH (amb)	Meter oF (1)	Meter oF (2)	Meter oF (amb)	Meter Vac. In. Hg. (1)	Meter Vac. In. Hg. (2)	Dilution Tunnel Temp.	Dilution Tunnel dP	Pro. Rate (%) (1)	Pro. Rate (%) (2)	Scale Reading	Weight Change	Load Side Liquid Flow Rate	Boiler Side Liquid Flow Rate (optional)	Thermopile ΔT	Boiler to Heat Exch. Temp.	Heat Exch to Boiler Temp.	Inlet Load Temp.	Outlet Load Temp.	Stack	Filter (1)	Filter (2)	Ambient		Specific Heat of Inlet Water (BTU/lb-°F)	Mass Flow Rate of Inlet Water (lb/min)	Heat Output, Btu
484	78.149	78.497		0.16	0.16	1.33	1.07	0.35	90	89	76	1.99	1.50	77	0.015	101	101	121.6	-0.03	1.99	15.4444218	104.3	171.6	158.9	66.8	171.1	145.22011	77	77	76		1.001	16.583	1732
485	78.310	78.660		0.16	0.16	1.33	1.07	0.35	90	89	76	1.99	1.50	77	0.015	101	102	121.4	0.16	2.07	15.3837767	104.0	171.3	158.6	66.8	170.8	144.0394	77	77	76		1.001	17.234	1795
486	78.472	78.824		0.16	0.16	1.33	1.07	0.35	90	89	76	1.99	1.50	77	0.015	101	103	121.5	-0.07	2.01	15.3770227	103.5	170.8	158.2	66.8	170.3	143.02968	77	77	76		1.001	16.745	1736
487	78.634	78.986		0.16	0.16	1.33	1.07	0.35	90	89	76	2.00	1.50	77	0.016	98	98	121.8	-0.24	2.07	15.4022875	103.1	170.4	157.8	66.8	169.9	141.91165	77	77	76		1.001	17.232	1779
488	78.796	79.149		0.16	0.16	1.33	1.06	0.35	90	89	76	2.00	1.50	77	0.014	105	105	121.7	0.11	2.05	15.4602213	102.7	170.0	157.5	66.8	169.5	140.99944	77	77	76		1.001	17.071	1755
489	78.958	79.311		0.16	0.16	1.33	1.07	0.35	90	89	76	1.99	1.50	77	0.016	98	98	121.7	0.00	2.01	15.36516	102.2	169.5	157.0	66.8	169.0	139.91811	77	77	76		1.001	16.747	1714
490	79.120	79.474		0.16	0.16	1.33	1.07	0.35	90	89	76	1.98	1.50	77	0.017	95	96	121.6	0.00	2.07	15.4316034	101.8	169.1	156.6	66.8	168.6	139.08757	77	77	76		1.001	17.233	1756
491	79.282	79.638		0.16	0.16	1.32	1.06	0.35	90	89	76	2.00	1.50	77	0.017	95	96	121.6	0.05	2.03	15.4438982	101.4	168.7	156.2	66.8	168.2	138.07794	77	77	76		1.001	16.911	1716
492	79.443	79.801		0.16	0.16	1.32	1.06	0.35	90	89	76	1.98	1.50	77	0.014	104	105	121.7	-0.10	2.07	15.4022646	100.9	168.2	155.7	66.8	167.7	137.35487	77	77	76		1.001	17.234	1741
493	79.605	79.963		0.16	0.16	1.33	1.07	0.35	90	89	76	2.00	1.50	77	0.015	101	101	121.8	-0.11	2.03	15.3743391	100.4	167.7	155.3	66.8	167.1	136.48067	77	77	76		1.001	16.908	1699
494	79.768	80.125		0.16	0.16	1.33	1.07	0.35	90	89	76	1.98	1.50	77	0.014	105	105	121.7	0.12	2.03	15.3781853	100.0	167.3	155.0	66.8	166.8	135.55675	76	77	76		1.001	16.907	1693
495	79.929	80.288		0.16	0.16	1.33	1.07	0.35	90	89	76	1.99	1.50	77	0.016	97	99	121.7	0.01	2.01	15.4719801	99.6	166.9	154.7	66.8	166.4	134.77545	76	77	76		1.001	16.748	1670
496	80.091	80.452		0.16	0.16	1.32	1.06	0.35	90	89	76	1.98	1.50	77	0.016	98	99	121.8	-0.11	2.11	15.4561911	99.1	166.4	154.2	66.8	165.9	133.81212	76	77	76		1.001	17.557	1742
497	80.253	80.614		0.16	0.16	1.32	1.06	0.35	90	89	76	1.99	1.50	77	0.016	98	98	121.8	-0.06	2.09	15.4510107	98.7	166.0	153.8	66.8	165.5	132.9756	76	76	76		1.001	17.397	1719
498	80.415	80.777		0.16	0.16	1.33	1.07	0.35	90	89	76	2.00	1.50	77	0.015	101	102	121.8	0.07	2.07	15.4603405	98.3	165.5	153.5	66.8	165.0	132.42131	76	76	76		1.001	17.233	1696
499	80.577	80.940		0.16	0.16	1.32	1.07	0.35	90	89	76	2.00	1.50	77	0.016	98	99	121.7	0.07	2.05	15.3859692	97.8	165.1	153.0	66.8	164.5	131.68965	76	76	76		1.001	17.081	1672
500	80.739	81.103		0.16	0.16	1.32	1.07	0.35	90	89	76	2.00	1.50	77	0.016	98	99	121.8	-0.11	2.14	15.3979893	97.3	164.5	152.6	66.8	164.0	131.09168	76	76	76		1.001	17.783	1732
501	80.901	81.266		0.16	0.16	1.32	1.07	0.35	90	89	76	2.00	1.50	77	0.016	98	99	121.8	0.06	2.10	15.4693928	96.9	164.2	152.2	66.7	163.7	130.59877	76	76	76		1.001	17.497	1698
502	81.063	81.428		0.16	0.16	1.32	1.06	0.35	90	89	76	2.00	1.50	76	0.015	101	101	121.7	0.05	2.04	15.3455544	96.4	163.7	151.9	66.8	163.2	129.83606	76	76	76		1.001	16.940	1636
503	81.225	81.591		0.16	0.16	1.33	1.06	0.35	90	89	76	1.98	1.50	76	0.015	101	102	121.8	-0.11	2.09	15.4789457	96.0	163.3	151.3	66.8	162.8	129.25871	76	76	76		1.001	17.396	1672
504	81.387	81.754		0.16	0.16	1.33	1.07	0.35	90	89	76	1.99	1.50	77	0.015	101	102	121.9	-0.08	2.07	15.3741474	95.6	162.9	150.9	66.7	162.3	128.82636	76	76	76		1.001	17.213	1647
505	81.549	81.917		0.16	0.16	1.34	1.07	0.35	90	89	76	2.00	1.50	76	0.015	101	102	122.0	-0.07	2.07	15.4096241	95.1	162.4	150.4	66.7	161.8	127.93629	76	76	76		1.001	17.262	1643
506	81.711	82.080		0.16	0.16	1.32	1.06	0.35	90	89	76	1.99	1.50	78	0.015	101	102	121.9	0.09	2.13	15.4404097	94.7	162.0	150.1	66.7	161.4	137.224	76	76	76		1.001	17.691	1677
507	81.872	82.241		0.16	0.16	1.31	1.05	0.35	89	89	76	2.01	1.50	90	0.017	96	96	121.4	0.44	2.07	15.4603472	94.1	161.4	149.6	66.7	160.9	159.18684	78	78	76		1.001	17.237	1624
508	82.033	82.403		0.16	0.16	1.32	1.05	0.35	89	89	76	2.01	1.50	90	0.015	102	102	121.0	0.47	2.07	15.3762522	93.8	161.1	149.3	66.7	160.5	170.98236	78	78	76		1.001	17.249	1619
509	82.194	82.565		0.16	0.16	1.32	1.05	0.35	90	89	76	2.01	1.50	91	0.017	96	96	120.2	0.76	2.15	15.3928156	93.3	160.6	149.0	66.7	160.1	180.4245	78	78	76		1.001	17.881	1671
510	82.355	82.726		0.16	0.16	1.32	1.05	0.35	90	89	76	2.03	1.50	92	0.016	99	99	119.9	0.29	2.15	15.345768	92.9	160.1	148.5	66.7	159.6	188.7437	78	78	76		1.001	17.890	1663
511	82.516	82.887		0.16	0.16	1.32	1.05	0.35	90	89	76	2.02	1.50	94	0.016	99	99	119.5	0.45	2.11	15.4022532	92.7	160.0	148.3	66.7	159.4	195.9204	78	78	76		1.001	17.561	1630
512	82.677	83.048		0.16	0.16	1.32	1.06	0.35	89	89	76	2.01	1.50	95	0.016	99	99	118.9	0.54	2.11	15.4142714	92.7	160.0	148.2	66.7	159.4	201.6629	78	78	76		1.001	17.556	1629
513	82.838	83.211		0.16	0.16	1.32	1.06	0.35	89	89	76	2.01	1.50	97	0.017	96	97	118.5	0.45	2.11	15.3582573	92.7	160.0	148.2	66.7	159.4	206.1024	78	78	76		1.001	17.559	1629
514	82.999	83.373		0.16	0.16	1.33	1.06	0.35	89	89	76	2.01	1.50	98	0.016	99	100	118.0	0.52	2.17	15.3549948	92.7	160.1	148.0	66.7	159.4	209.47968	78	78	76		1.001	18.039	1675
515	83.160	83.534		0.16	0.16	1.32	1.06	0.35	89	89	76	2.00	1.50	99	0.015	103	103	117.4	0.53	2.15	15.3259306	92.8	160.1	148.0	66.7	159.5	213.02591	78	79	76		1.001	17.886	1662
516	83.322	83.696		0.16	0.16	1.32	1.06	0.35	89	89	76	2.02	1.50	100	0.015	104	103	117.0	0.44	2.21	15.4282274	92.8	160.3	147.8	66.7	159.5	216.06377	79	79	76		1.001	18.369	1706
517	83.483	83.858		0.16	0.16	1.32	1.06	0.35	90	89	76	2.02	1.50	101	0.015	103	103	116.5	0.53	2.21	15.4219513	93.1	160.5	148.1	66.7	159.8	219.98273	79	79	76		1.001	18.370	1712
518	83.644	84.020		0.16	0.16	1.33	1.06	0.35	89	89	76	2.01	1.50	102	0.015	103	104	115.9	0.52	2.23	15.3974171	93.3	160.7	148.2	66.7	160.0	224.73499	79	79	76		1.001	18.531	1731
519	83.805	84.181		0.16	0.16	1.33	1.06	0.35	90	89	76	2.01	1.50	104	0.016	100	100	115.4	0.58	2.21	15.4312992	93.5	161.0	148.4	66.7	160.2	230.51863	80	80	76		1.001	18.370	1720
520	83.966	84.342		0.16	0.16	1.32	1.06	0.35	90	89	76	2.02	1.50	106	0.015	103	103	114.6	0.76	2.21	15.3928556	93.9	161.4	148.7	66.7	160.6	236.30655	80	80	76		1.001	18.366	1727
521	84.127	84.504		0.16	0.16	1.32	1.05	0.35	90	89	76	2.03	1.60	108	0.016	100	101	114.0	0.62	2.23	15.5076103	94.3	161.7	149.0	66.7	161.0	242.13371	81	81	76		1.001	18.531	1749
522	84.287	84.664		0.16	0.16	1.32	1.05	0.35	90	89	76	2.04	1.60	109	0.016	100	100	113.2	0.77	2.17	15.3279657	94.8	162.3	149.6	66.7	161.5	246.565	81	82	76		1.001	18.040	1713
523	84.447	84.825		0.16	0.16	1.32	1.05	0.35	89	89	76	2.05	1.60	110	0.016	100	100	112.3	0.91	2.26	15.4373522	95.4	162.8	150.1	66.6	162.0	250.43549	82	82	76		1.001	18.853	1800
524	84.607	84.986		0.16	0.16	1.32	1.05	0.35	90	89	76	2.06	1.60	111	0.016	100	100	111.6	0.67	2.28	15.3661699	96.0	163.4	150.5	66.6	162.6	254.06151	83	83	76		1.001	19.019	1827
525	84.767	85.146		0.16	0.16	1.31	1.04	0.35	90	89	76	2.06	1.60	112	0.017	97	97	110.5	1.12	2.15	15.4406328	96.6	164.1	151.1	66.6	163.2	256.79135	83	83	76		1.001	17.882	1730
526	84.927	85.306		0.16	0.16	1.31	1.04	0.35	89	89	76	2.07	1.6	112	0.015	103	103	110.0	0.50	2.26	15.3837605	97.2	164.7	151.6	66.6	163.8	257.5867	84	84	76		1.001	18.854	1835
527	85.087	85.466		0.16	0.16	1.31	1.03	0.35	89	89	76	2.08	1.6	112	0.016	100	100	109.0	1.03	2.13	15.417593	98.0	165.4	152.3	66.6	164.6	258.3736	84	85	76		1.001	17.723	1738
528	85.247	85.624		0.16	0.16	1.31	1.02	0.35	89	89	76	2.08	1.6	112	0.015	103	102	108.2	0.76	2.11	15.3553391	98.7	166.1	153.0	66.6	165.3	258.3161	84	85	76		1.001	17.558	1735
529	85.406	85.783		0.16	0.16	1.3	1.03	0.35	89	89	76	2.09	1.6	113	0.015	103	103	107.2	0.98	2.21	15.4221334	99.3	166.7	153.4	66.6	165.9	260.53857	85	85	76		1.001	18.365	1825
530	85.565	85.943		0.16	0.16	1.3	1.02	0.35	90	89	76	2.09	1.6	113	0.015	103	103	106.4	0.79	2.23	15.3743248	99.9	167.4	153.9	66.6	166.5	261.37134	85	86	76		1.001	18.529	1854
531	85.724	86.100		0.16	0.16	1.29	1.02	0.35	89	89	76	2.09	1.6	113	0.016	100	98	105.7	0.75	2.19	15.4025955	100.5	167.9	154.5	66.6	167.1	261.7529	85	86	76		1.001	18.207	1833
532	85.882	86.259		0.16	0.16	1.29	1.01	0.35	89	89	76	2.11	1.7	112	0.015	102	103	104.7	0.94	2.19	15.4311504	101.4	168.8	155.2	66.6	167.9	259.11112	86	86	76		1.001	18.205	1848
533	86.041	86.416		0.16	0.16	1.29	1.01	0.35	89	89	76	2.12	1.7	112	0.017	96	95	103.9	0.86	2.28	15.4985218	102.0	169.5	155.8	66.6	168.6	260.13144	86	86	76		1.001	19.010	1942
534	86.199	86.573		0.16	0.16	1.29	1.01	0.35	89	89	76	2.13	1.7	112	0.016	99	98	102.9	0.94	2.21	15.4510155	102.7	170.1	156.3	66.6	169.2	262.05441	86	87	76		1.001	18.365	1888
535	86.357	86.731		0.16	0.16	1.29	1.00	0.35	89	89	76	2.12	1.7	112	0.015	102	102	102.0	0.95	2.25	15.3743248	103.3	170.8	156.9	66.6	169.9	262.24985	86	87	76		1.001	18.693	1934
536	86.516	86.888		0.16	0.16	1.29	1.01	0.35	89	89	76	2.12	1.7	114	0.016	100	98	101.1	0.94	2.19	15.3638802	104.2	171.6	157.6	66.6	170.7	265.34171	87	87	76		1.001	18.203	1899
537	86.674	87.045		0.16	0.16	1.29	1.00	0.35	89	89	76	2.13	1.7	114	0.016	99	98	100.4	0.61	2.28	15.4316502	104.8	172.1	158.1	66.6	171.3	265.76962	87	87	76		1.001	19.013	1994
538	86.832	87.201		0.16	0.16	1.27	1.00	0.35	89	89	76	2.14	1.7	112	0.017	96	95	99.6	0.86	2.19	15.440505	105.5	172.9	158.8	66.5	172.1	263.23828	86	87	76		1.001	18.203	1923
539	86.989	87.359		0.16	0.16	1.28	1.00	0.35	89	89	76	2.13	1.7	110	0.016	98	99	98.8	0.74	2.19	15.4126873	105.9	173.3	159.1	66.5	172.5	258.86569	86	86	76		1.001	18.204	1931
540	87.147	87.514		0.16	0.16	1.28	0.99	0.35	89	89	76	2.13	1.7	111	0.016	99	97	98.1	0.70	2.21	15.3746948	106.4	173.8	159.6	66.5	172.9	261.36725	86	87	76		1.001	18.367	1956
541	87.306	87.679		0.16	0.17	1.31	1.06	0.35	89	89	76	2.16	1.9	114	0.016	100	103	97.1	1.03	2.25	15.3930998	106.7	174.2	159.3	66.5	173.2	265.54144	87	87	76		1.001	18.693	1997
542	87.465	87.840		0.16	0.16	1.3	1.05	0.35	89	89	76	2.16	1.9	114	0.015	103	104	96.5	0.58	2.34	15.4160385	107.8	175.4	160.4	66.5	174.4	267.67117	87	87	76		1.001	19.500	2105
543	87.624	88.001		0.16	0.16	1.29	1.05	0.35	89	89	76	2.17	1.9	115	0.016	100	101	95.7	0.83	2.30	15.4506121	108.9	176.5	161.3	66.5	175.4	268.56702	87	87	76		1.001	19.174	2091
544	87.783	88.162		0.16	0.16	1.3	1.05	0.35	89	89	76	2.18	1.9	115	0.016	100	101	94.7	0.96	2.26	15.3452997	109.8	177.3	162.1	66.5	176.3	269.05576	87	87	76		1.001	18.852	2072
545	87.942	88.322		0.16	0.16	1.29	1.05	0.35	89	89	76	2.17	1.9	116	0.016	100	100	94.0	0.76	2.28	15.4220438	110.5	178.0	162.6	66.5	177.0	270.49133	87	87	76		1.001	19.014	2104

Elapsed Time	Particulate Sampling Data																	Fuel Weight, lb		Flow, gpm		Temperature Data, oF												
	Gas Meter Cubic Feet (1)	Gas Meter Cubic Feet (2)	Gas Meter Cubic Feet (amb)	Sample Rate, cfm (1)	Sample Rate, cfm (2)	Orifice dH (1)	Orifice dH (2)	Orifice dH (amb)	Meter oF (1)	Meter oF (2)	Meter oF (amb)	Meter Vac. In. Hg. (1)	Meter Vac. In. Hg. (2)	Dilution Tunnel Temp.	Dilution Tunnel dP	Pro. Rate (%) (1)	Pro. Rate (%) (2)	Scale Reading	Weight Change	Load Side Liquid Flow Rate	Boiler Side Liquid Flow Rate (optional)	Thermopile ΔT	Boiler to Heat Exch. Temp.	Heat Exch to Boiler Temp.	Inlet Load Temp.	Outlet Load Temp.	Stack	Filter (1)	Filter (2)	Ambient		Specific Heat of Inlet Water (BTU/lb-°F)	Mass Flow Rate of Inlet Water (lb/min)	Heat Output, Btu
546	88.101	88.483		0.16	0.16	1.29	1.05	0.35	89	89	76	2.19	1.9	116	0.017	97	98	93.4	0.54	2.34	15.4220667	111.2	178.7	163.3	66.5	177.7	271.50916	87	87	76		1.001	19.497	2171
547	88.259	88.643		0.16	0.16	1.29	1.04	0.35	89	89	76	2.17	1.9	116	0.015	102	104	92.5	0.92	2.28	15.3847971	112.0	179.6	163.9	66.5	178.5	272.36017	87	87	76		1.001	19.013	2132
548	88.417	88.803		0.16	0.16	1.29	1.04	0.35	89	89	76	2.19	1.9	116	0.016	99	100	91.8	0.75	2.28	15.4218569	112.7	180.3	164.5	66.6	179.2	273.28668	87	87	76		1.001	19.015	2145
549	88.576	88.963		0.16	0.16	1.3	1.03	0.35	89	89	76	2.18	1.9	117	0.016	100	100	90.8	1.01	2.38	15.3516302	113.4	181.0	165.3	66.6	180.0	274.60852	87	87	76		1.001	19.824	2250
550	88.734	89.123		0.16	0.16	1.3	1.04	0.35	89	89	76	2.18	1.9	101	0.016	98	99	90.4	0.37	2.30	15.3634501	114.1	181.7	165.9	66.6	180.7	259.52921	85	84	76		1.001	19.175	2190
551	88.894	89.282		0.16	0.16	1.29	1.04	0.35	89	89	76	2.16	1.9	91	0.016	98	97	90.0	0.39	2.30	15.5041485	114.5	182.0	166.3	66.7	181.1	240.20894	83	83	76		1.001	19.179	2198
552	89.054	89.444		0.16	0.16	1.29	1.04	0.35	89	89	76	2.16	1.9	87	0.014	105	106	89.7	0.28	2.19	15.4403267	114.6	182.2	166.5	66.7	181.3	229.7777	82	81	76		1.001	18.204	2089
553	89.213	89.604		0.16	0.16	1.29	1.04	0.35	89	89	76	2.15	1.8	84	0.014	104	104	89.7	0.04	2.32	15.4228373	114.4	182.0	166.4	66.7	181.1	222.71773	81	80	76		1.001	19.338	2215
554	89.372	89.765		0.16	0.16	1.3	1.05	0.35	89	89	76	2.16	1.8	84	0.015	100	101	89.4	0.29	2.23	15.4694357	114.2	181.8	166.2	66.7	180.9	215.37767	80	80	76		1.001	18.528	2118
555	89.532	89.927		0.16	0.16	1.3	1.05	0.35	89	89	76	2.13	1.9	83	0.015	101	102	89.4	-0.05	2.21	15.371666	114.0	181.5	166.3	66.7	180.8	209.42221	79	79	76		1.001	18.369	2097
556	89.692	90.089		0.16	0.16	1.31	1.05	0.35	89	89	76	2.11	1.8	82	0.016	97	98	89.1	0.38	2.21	15.3837385	113.8	181.3	166.0	66.8	180.5	204.86415	78	79	76		1.001	18.365	2092
557	89.852	90.251		0.16	0.16	1.32	1.07	0.35	89	89	76	2.09	1.8	81	0.015	101	102	89.2	-0.12	2.25	15.3638735	113.5	180.9	166.0	66.8	180.3	201.31187	78	79	76		1.001	18.690	2124
558	90.013	90.414		0.16	0.16	1.32	1.07	0.35	89	89	76	2.09	1.8	81	0.016	98	99	89.2	0.00	2.11	15.4321804	113.3	180.7	166.3	66.8	180.1	198.15012	78	78	76		1.001	17.556	1992
559	90.175	90.577		0.16	0.16	1.32	1.07	0.35	89	89	76	2.07	1.8	80	0.015	102	102	89.1	0.05	2.11	15.3866568	113.0	180.4	166.0	66.8	179.8	196.70868	77	77	76		1.001	17.556	1986
560	90.336	90.742		0.16	0.17	1.32	1.08	0.35	89	89	76	2.07	1.7	79	0.016	98	100	89.2	-0.04	2.13	15.4099064	112.6	180.1	165.8	66.9	179.5	195.35663	77	77	76		1.001	17.718	1998
561	90.498	90.905		0.16	0.16	1.33	1.08	0.35	89	89	76	2.06	1.7	79	0.014	105	106	89.1	0.04	2.13	15.420043	112.3	179.8	165.5	66.9	179.2	193.26157	76	76	76		1.001	17.719	1992
562	90.660	91.069		0.16	0.16	1.33	1.08	0.35	89	89	76	2.06	1.7	78	0.016	98	99	89.1	0.03	2.17	15.422102	111.9	179.5	165.3	67.0	178.9	191.03459	76	76	76		1.001	18.043	2022
563	90.822	91.233		0.16	0.16	1.33	1.09	0.35	89	88	76	2.05	1.7	78	0.014	105	106	89.1	-0.04	2.01	15.4312744	111.5	179.1	165.1	67.0	178.5	188.5854	75	75	76		1.001	16.749	1870
564	90.984	91.398		0.16	0.16	1.33	1.09	0.35	89	89	76	2.06	1.7	78	0.016	98	100	89.1	0.00	2.09	15.3685808	111.1	178.7	164.8	67.1	178.2	186.08452	75	75	76		1.001	17.394	1934
565	91.146	91.563		0.16	0.17	1.33	1.09	0.35	89	89	76	2.06	1.7	78	0.014	105	107	89.2	-0.05	2.13	15.4889803	110.7	178.3	164.5	67.1	177.8	183.5248	74	75	76		1.001	17.718	1963
566	91.308	91.728		0.16	0.16	1.33	1.10	0.35	89	89	76	2.06	1.7	78	0.016	98	100	89.3	-0.11	2.13	15.2785158	110.2	177.9	164.1	67.2	177.4	181.06865	74	75	76		1.001	17.720	1955
567	91.470	91.894		0.16	0.17	1.33	1.10	0.35	89	89	76	2.05	1.7	78	0.016	98	101	89.2	0.04	2.11	15.3904495	109.8	177.5	163.8	67.2	177.0	178.73566	74	75	76		1.001	17.556	1930
568	91.632	92.060		0.16	0.17	1.33	1.10	0.35	89	89	76	2.04	1.7	78	0.015	101	104	89.3	-0.01	2.05	15.3552132	109.4	177.2	163.5	67.3	176.7	176.52768	74	75	76		1.001	17.071	1870
569	91.794	92.226		0.16	0.17	1.33	1.11	0.35	89	88	76	2.04	1.7	78	0.014	105	108	89.2	0.02	2.05	15.3998775	108.9	176.7	163.1	67.3	176.2	174.32335	74	75	76		1.001	17.071	1861
570	91.957	92.391		0.16	0.17	1.33	1.11	0.35	89	88	76	2.05	1.7	78	0.015	102	103	89.0	0.20	2.05	15.3928204	108.5	176.3	162.8	67.3	175.9	172.25845	74	75	76		1.001	17.071	1855
571	92.119	92.558		0.16	0.17	1.33	1.11	0.35	89	88	76	2.05	1.7	78	0.016	98	101	89.3	-0.25	2.09	15.4695034	108.1	175.9	162.4	67.4	175.5	170.1712	74	75	76		1.001	17.394	1882
572	92.281	92.724		0.16	0.17	1.34	1.11	0.35	89	88	76	2.04	1.7	78	0.016	98	101	89.1	0.16	2.11	15.3547754	107.6	175.5	162.1	67.4	175.1	168.17754	74	75	76		1.001	17.557	1892
573	92.443	92.890		0.16	0.17	1.33	1.12	0.35	89	88	76	2.05	1.6	78	0.016	98	101	89.3	-0.14	1.91	15.4734106	107.2	175.1	162.2	67.4	174.6	166.25392	74	75	76		1.001	15.936	1710
574	92.606	93.057		0.16	0.17	1.34	1.12	0.35	89	88	76	2.04	1.6	77	0.015	102	105	89.1	0.11	2.07	15.3938656	106.8	174.7	161.5	67.5	174.2	164.39439	74	75	76		1.001	17.233	1842
575	92.768	93.225		0.16	0.17	1.34	1.13	0.35	89	88	76	2.04	1.6	77	0.015	101	105	89.3	-0.17	2.09	15.3356857	106.2	174.3	161.0	67.5	173.8	162.6398	74	75	76		1.001	17.388	1850
576	92.931	93.392		0.16	0.17	1.34	1.13	0.35	89	88	76	2.04	1.6	77	0.016	99	101	89.3	0.00	2.06	15.4022417	105.8	173.8	160.7	67.5	173.4	160.77806	74	75	76		1.001	17.152	1817
577	93.093	93.559		0.16	0.17	1.33	1.13	0.35	89	88	76	2.04	1.6	77	0.016	98	101	89.3	0.07	2.01	15.4415522	105.4	173.4	160.3	67.6	173.0	159.19388	75	75	76		1.001	16.744	1767
578	93.255	93.727		0.16	0.17	1.34	1.13	0.35	89	88	76	2.05	1.6	77	0.016	98	102	89.2	0.04	2.07	15.4023457	104.9	173.0	160.0	67.6	172.5	157.55899	75	75	76		1.001	17.233	1810
579	93.417	93.895		0.16	0.17	1.34	1.13	0.35	89	88	76	2.04	1.6	77	0.016	98	102	89.2	-0.01	2.09	15.4406042	104.5	172.6	159.6	67.6	172.2	156.04514	75	75	76		1.001	17.361	1817
580	93.580	94.063		0.16	0.17	1.34	1.13	0.35	89	88	76	2.03	1.6	77	0.017	96	99	89.1	0.08	2.09	15.4069538	104.0	172.1	159.2	67.7	171.6	154.59192	75	75	76		1.001	17.378	1809
581	93.742	94.231		0.16	0.17	1.35	1.13	0.35	89	88	76	2.03	1.6	77	0.016	98	102	89.3	-0.13	2.05	15.3837671	103.6	171.7	158.8	67.7	171.3	153.18341	75	75	76		1.001	17.063	1769
582	93.905	94.399		0.16	0.17	1.34	1.13	0.35	89	88	75	2.05	1.6	77	0.015	102	105	89.3	0.02	2.05	15.4185371	103.1	171.3	158.4	67.7	170.9	151.7843	75	75	75		1.001	17.039	1760
583	94.068	94.567		0.16	0.17	1.35	1.13	0.35	89	88	75	2.03	1.6	77	0.017	96	99	89.2	0.03	2.17	15.4022379	102.6	170.8	158.0	67.7	170.4	150.44824	75	75	75		1.001	18.043	1854
584	94.230	94.734		0.16	0.17	1.35	1.13	0.35	89	88	75	2.03	1.6	77	0.016	98	101	89.5	-0.24	1.99	15.4428434	102.2	170.4	157.7	67.8	170.0	149.1088	75	75	75		1.001	16.586	1697
585	94.393	94.902		0.16	0.17	1.35	1.14	0.35	89	88	75	2.04	1.6	77	0.016	99	102	89.4	0.12	2.13	15.4407005	101.7	169.9	157.3	67.8	169.5	147.74132	75	75	75		1.001	17.734	1806
586	94.555	95.070		0.16	0.17	1.35	1.14	0.35	89	88	75	2.02	1.6	77	0.015	101	105	89.3	0.02	2.07	15.4317722	101.2	169.5	156.9	67.8	169.0	146.47235	75	75	75		1.001	17.229	1746
587	94.718	95.238		0.16	0.17	1.35	1.14	0.35	89	88	75	2.04	1.6	77	0.013	110	113	89.3	0.00	2.01	15.514369	100.8	169.1	156.6	67.8	168.7	145.36127	75	75	75		1.001	16.756	1691
588	94.881	95.406		0.16	0.17	1.34	1.14	0.35	89	89	75	2.03	1.6	77	0.015	102	105	89.3	0.02	2.05	15.4746122	100.3	168.6	156.2	67.9	168.2	144.14667	75	75	75		1.001	17.074	1715
589	95.044	95.575		0.16	0.17	1.34	1.13	0.35	89	89	75	2.03	1.6	77	0.015	102	106	89.4	-0.13	2.03	15.4787016	99.9	168.2	155.8	67.9	167.7	142.93205	75	75	75		1.001	16.913	1691
590	95.207	95.742		0.16	0.17	1.34	1.13	0.35	89	88	76	2.03	1.6	77	0.017	96	98	89.4	0.04	2.11	15.4312019	99.4	167.7	155.3	67.9	167.3	141.83499	75	75	76		1.001	17.555	1746
591	95.369	95.911		0.16	0.17	1.34	1.14	0.35	89	88	76	2.04	1.6	77	0.016	98	102	89.3	0.07	2.03	15.3969193	98.9	167.2	154.9	67.9	166.8	140.83237	75	75	76		1.001	16.912	1674
592	95.532	96.079		0.16	0.17	1.34	1.13	0.35	89	88	76	2.03	1.6	77	0.016	99	102	89.3	0.02	2.11	15.4030981	98.5	166.9	154.6	67.9	166.4	139.74994	75	75	76		1.001	17.558	1732
593	95.695	96.246		0.16	0.17	1.34	1.14	0.35	89	88	76	2.03	1.6	77	0.016	99	101	89.4	-0.09	2.09	15.3955288	98.1	166.5	154.3	67.9	166.0	138.74478	75	76	76		1.001	17.400	1709
594	95.858	96.415		0.16	0.17	1.34	1.14	0.35	89	88	76	2.03	1.6	77	0.014	106	110	89.5	-0.12	2.09	15.4126663	97.6	166.0	153.8	67.9	165.5	137.91692	75	75	76		1.001	17.396	1700
595	96.020	96.582		0.16	0.17	1.35	1.13	0.35	89	88	76	2.03	1.6	77	0.016	98	101	89.4	0.11	2.09	15.4726019	97.2	165.5	153.5	67.9	165.1	136.90451	75	75	76		1.001	17.399	1693
596	96.183	96.751		0.16	0.17	1.34	1.13	0.35	89	88	76	2.04	1.6	77	0.015	102	106	89.6	-0.18	2.05	15.4557791	96.8	165.1	153.5	67.9	164.7	136.12773	75	75	76		1.001	17.069	1655
597	96.346	96.918		0.16	0.17	1.33	1.13	0.35	89	88	76	2.04	1.6	77	0.015	102	105	89.3	0.26	2.07	15.4351635	96.3	164.6	152.6	67.9	164.2	135.36287	75	75	76		1.001	17.234	1661
598	96.509	97.086		0.16	0.17	1.34	1.14	0.35	89	88	76	2.02	1.6	76	0.015	102	105	89.5	-0.14	2.15	15.4312611	95.8	164.2	152.1	67.9	163.7	134.49886	75	75	76		1.001	17.882	1715
599	96.671	97.254		0.16	0.17	1.34	1.14	0.35	89	88	76	2.04	1.6	76	0.016	98	102	89.4	0.04	2.09	15.4694672	95.4	163.8	151.7	67.9	163.3	133.80782	75	76	76		1.001	17.396	1661
600	96.834	97.420		0.16	0.17	1.35	1.05	0.35	89	88	76	2.04	1.50	76	0.016	99	101	89.5	-0.05	2.15	15.402215	94.8	163.2	151.2	68.0	162.8	132.81664	75	76	76		1.001	17.882	1697
601	96.996	97.582		0.16	0.16	1.34	1.05	0.35	89	88	76	2.03	1.50	76	0.015	101	101	89.4	0.05	2.03	15.3255682	94.5	162.9	151.0	68.0	162.4	132.08965	75	76	76		1.001	16.908	1599
602	97.158	97.745		0.16	0.16	1.34	1.05	0.35	89	88	76	2.03	1.50	76	0.013	109	110	89.4	0.01	2.11	15.4161596	94.0	162.4	150.5	67.9	161.9	131.34496	75	76	76		1.001	17.558	1653
603	97.321	97.906		0.16	0.16	1.34	1.05	0.35	89	88	76	2.05	1.50	77	0.016	99	98	89.5	-0.06	2.13	15.4695053	93.6	162.0	150.2	67.9	161.5	134.59108	76	76	76		1.001	17.718	1661
604	97.483	98.066		0.16	0.16	1.33	1.03	0.35	89	88	76	2.08	1.60	90	0.016	99	98	89.0	0.44	2.13	15.4220009	93.2	161.5	149.8	67.9	161.1	159.51665	77	78	76		1.001	17.717	1652
605	97.645	98.226		0.16	0.16	1.32	1.02	0.35	89	88	76	2.08	1.60	90	0.016	99	98	88.5	0.59	2.17	15.4311094	92.7	161.1	149.2	67.9	160.6	172.22266	78	78	76		1.001	18.044	1674
606	97.805	98.386		0.16	0.16	1.32	1.02	0.35	89	88	76	2.09	1.60	90	0.015	101	101	88.3	0.16	2.17	15.3073835	92.2	160.6	148.8	67.9	160.1	181.50383	77	78	76		1.001	18.042	1665
607	97.966	98.544		0.16	0.16	1.32	1.02	0.35	89	88	76	2.10	1.60	92	0.015	102	100	87.7	0.57	2.13	15.3841505	91.7	160.2	148.1	67.9	159.7	189.94836	77	77	76		1.001	17.718	1627

Elapsed Time	Particulate Sampling Data																		Fuel Weight, lb		Flow, gpm		Temperature Data, oF												
	Gas Meter Cubic Feet (1)	Gas Meter Cubic Feet (2)	Gas Meter Cubic Feet (amb)	Sample Rate, cfm (1)	Sample Rate, cfm (2)	Orifice dH (1)	Orifice dH (2)	Orifice dH (amb)	Meter oF (1)	Meter oF (2)	Meter oF (amb)	Meter Vac. In. Hg. (1)	Meter Vac. In. Hg. (2)	Dilution Tunnel Temp.	Dilution Tunnel dP	Pro. Rate (%) (1)	Pro. Rate (%) (2)	Scale Reading	Weight Change	Load Side Liquid Flow Rate	Boiler Side Liquid Flow Rate (optional)	Thermopile ΔT	Boiler to Heat Exch. Temp.	Heat Exch to Boiler Temp.	Inlet Load Temp.	Outlet Load Temp.	Stack	Filter (1)	Filter (2)	Ambient		Specific Heat of Inlet Water (BTU/lb-°F)	Mass Flow Rate of Inlet Water (lb/min)	Heat Output, Btu
608	98.127	98.704		0.16	0.16	1.32	1.02	0.35	89	88	75	2.11	1.60	95	0.016	99	99	87.1	0.61	2.17	15.4126263	91.5	160.1	148.0	67.9	159.5	199.72041	77	77	75		1.001	18.043	1654
609	98.288	98.863		0.16	0.16	1.33	1.02	0.35	89	88	75	2.09	1.60	97	0.016	99	98	86.6	0.55	2.34	15.4312429	91.5	160.1	147.9	68.0	159.5	207.70625	77	77	75		1.001	19.501	1786
610	98.449	99.022		0.16	0.16	1.33	1.03	0.35	89	88	76	2.09	1.60	98	0.014	106	105	86.1	0.42	2.32	15.3927774	91.6	160.3	147.9	68.0	159.6	214.42734	78	78	76		1.001	19.338	1774
611	98.611	99.183		0.16	0.16	1.33	1.03	0.35	89	88	76	2.10	1.60	100	0.016	100	100	85.7	0.41	2.32	15.3837242	91.9	160.6	148.3	68.0	159.9	220.3674	78	78	76		1.001	19.338	1780
612	98.772	99.341		0.16	0.16	1.33	1.03	0.35	89	88	75	2.08	1.60	102	0.016	100	98	85.0	0.70	2.21	15.3824739	92.4	161.1	148.7	68.0	160.4	227.55632	79	79	75		1.001	18.367	1699
613	98.933	99.501		0.16	0.16	1.33	1.03	0.35	89	88	76	2.09	1.60	104	0.014	107	106	84.3	0.77	2.28	15.3462305	92.8	161.5	149.1	68.0	160.8	232.58777	79	79	76		1.001	19.016	1767
614	99.093	99.660		0.16	0.16	1.32	1.02	0.35	89	88	76	2.11	1.60	105	0.015	103	102	83.6	0.66	2.28	15.4217014	93.3	162.0	149.5	68.0	161.3	237.24239	80	80	76		1.001	19.015	1776
615	99.254	99.818		0.16	0.16	1.32	1.02	0.35	89	88	76	2.12	1.70	107	0.016	100	98	82.8	0.75	2.21	15.3837585	93.9	162.6	150.0	68.0	161.9	242.26411	80	81	76		1.001	18.369	1728
616	99.413	99.976		0.16	0.16	1.31	1.01	0.35	89	88	76	2.14	1.70	108	0.014	106	105	82.2	0.68	2.28	15.4507313	94.5	163.1	150.5	67.9	162.4	245.95129	81	81	76		1.001	19.014	1798
617	99.573	100.133		0.16	0.16	1.30	1.00	0.35	89	88	76	2.14	1.70	109	0.016	100	98	81.4	0.75	2.27	15.3661203	95.0	163.6	150.9	67.9	162.9	248.73444	82	81	76		1.001	18.854	1792
618	99.732	100.289		0.16	0.16	1.29	1.00	0.35	89	88	76	2.16	1.70	110	0.016	99	97	80.6	0.76	2.27	15.4534893	95.6	164.2	151.4	67.9	163.5	253.03313	82	82	76		1.001	18.853	1804
619	99.891	100.446		0.16	0.16	1.30	0.99	0.35	89	88	76	2.16	1.70	111	0.016	99	98	79.7	0.94	2.19	15.3928518	96.2	164.9	151.9	67.9	164.1	255.7731	83	83	76		1.001	18.203	1753
620	100.050	100.602		0.16	0.16	1.29	0.99	0.35	89	88	76	2.17	1.70	111	0.016	99	98	78.9	0.75	2.23	15.4406462	97.0	165.8	152.7	67.9	164.9	256.7471	83	83	76		1.001	18.528	1800
621	100.208	100.758		0.16	0.16	1.30	0.98	0.35	89	88	76	2.18	1.70	111	0.016	99	98	78.0	0.91	2.15	15.383729	97.7	166.5	153.3	67.9	165.7	257.24335	83	83	76		1.001	17.880	1750
622	100.367	100.913		0.16	0.16	1.29	0.98	0.35	89	88	76	2.18	1.70	111	0.015	103	100	77.5	0.58	2.25	15.440671	98.5	167.2	154.0	67.9	166.5	258.24664	84	83	76		1.001	18.690	1843
623	100.526	101.068		0.16	0.16	1.28	0.98	0.35	89	88	76	2.19	1.70	112	0.015	103	100	76.7	0.81	2.23	15.440424	99.3	168.0	154.7	67.9	167.2	259.85346	84	84	76		1.001	18.530	1841
624	100.684	101.223		0.16	0.16	1.29	0.98	0.35	89	88	76	2.20	1.70	112	0.016	99	97	75.8	0.86	2.26	15.4307899	99.9	168.7	155.2	68.0	167.9	261.06082	84	84	76		1.001	18.850	1885
625	100.842	101.378		0.16	0.16	1.27	0.97	0.35	89	88	76	2.22	1.80	110	0.016	99	97	74.8	0.95	2.19	15.4311123	100.7	169.5	156.0	68.0	168.7	258.40598	84	84	76		1.001	18.204	1835
626	100.999	101.533		0.16	0.16	1.27	0.97	0.35	89	88	76	2.23	1.80	110	0.016	98	97	74.4	0.42	2.25	15.3940592	101.0	169.8	156.2	68.0	169.0	257.94882	85	84	76		1.001	18.689	1891
627	101.157	101.687		0.16	0.15	1.27	0.96	0.35	89	88	76	2.22	1.80	111	0.016	99	96	73.4	0.99	2.27	15.3927956	101.6	170.4	156.8	68.0	169.6	259.22638	85	84	76		1.001	18.852	1917
628	101.314	101.841		0.16	0.15	1.28	0.96	0.35	89	88	76	2.23	1.80	111	0.016	98	96	72.8	0.61	2.23	15.3912067	102.1	170.9	157.2	68.0	170.1	260.15335	85	85	76		1.001	18.528	1894
629	101.472	101.994		0.16	0.15	1.27	0.96	0.35	89	88	76	2.23	1.80	110	0.016	99	96	72.1	0.75	2.27	15.4693317	102.8	171.6	157.8	68.0	170.8	260.13455	85	85	76		1.001	18.855	1941
630	101.630	102.148		0.16	0.15	1.27	0.95	0.35	89	88	76	2.23	1.80	111	0.016	99	96	71.4	0.67	2.25	15.4402189	103.4	172.2	158.3	68.0	171.3	260.50766	85	85	76		1.001	18.690	1934
631	101.791	102.304		0.16	0.16	1.34	1.03	0.35	89	88	76	2.29	1.90	111	0.015	104	101	70.6	0.82	2.23	15.4311886	104.0	172.8	158.9	68.0	172.0	262.32355	85	85	76		1.001	18.526	1929
632	101.952	102.464		0.16	0.16	1.34	1.03	0.35	89	88	76	2.31	1.90	111	0.016	101	100	69.7	0.84	2.25	15.3837271	104.7	173.5	159.4	68.0	172.6	262.04456	85	85	76		1.001	18.690	1958
633	102.113	102.623		0.16	0.16	1.34	1.03	0.35	89	88	76	2.30	1.90	112	0.017	98	97	69.2	0.53	2.26	15.3462706	105.2	174.0	159.9	67.9	173.1	263.19605	85	85	76		1.001	18.851	1985
634	102.275	102.782		0.16	0.16	1.34	1.03	0.35	89	88	76	2.32	1.90	111	0.015	105	103	68.5	0.75	2.21	15.3928108	105.8	174.6	160.4	67.9	173.7	261.89179	85	85	76		1.001	18.366	1945
635	102.436	102.941		0.16	0.16	1.33	1.02	0.35	89	88	76	2.30	2.00	111	0.017	98	96	67.8	0.67	2.27	15.2600012	106.4	175.2	160.9	67.9	174.3	262.56632	85	85	76		1.001	18.852	2008
636	102.597	103.099		0.16	0.16	1.32	1.02	0.35	89	88	76	2.33	2.00	112	0.016	101	99	66.9	0.88	2.25	15.3927546	107.1	175.9	161.6	67.9	175.0	264.39334	85	85	76		1.001	18.690	2004
637	102.758	103.258		0.16	0.16	1.32	1.01	0.35	89	88	76	2.32	2.00	112	0.016	101	99	66.2	0.74	2.21	15.4507694	107.7	176.5	162.1	67.9	175.6	264.29425	85	85	76		1.001	18.363	1980
638	102.918	103.415		0.16	0.16	1.32	1.01	0.35	89	88	75	2.32	2.00	111	0.016	100	98	65.5	0.63	2.25	15.3965359	108.3	177.1	162.7	67.9	176.3	264.56577	85	85	75		1.001	18.686	2027
639	103.079	103.573		0.16	0.16	1.31	0.99	0.35	89	88	76	2.33	2.00	111	0.014	108	106	64.6	0.91	2.28	15.3456869	108.9	177.6	163.2	67.9	176.8	264.2092	85	85	76		1.001	19.016	2073
640	103.239	103.729		0.16	0.16	1.32	0.98	0.35	89	88	76	2.33	2.00	110	0.016	100	97	64.2	0.44	2.28	15.4020929	109.5	178.3	163.8	67.9	177.5	264.12442	85	85	76		1.001	19.015	2085
641	103.400	103.885		0.16	0.16	1.32	0.99	0.35	89	88	76	2.34	2.00	110	0.014	107	104	63.4	0.83	2.13	15.4603195	110.0	178.8	164.2	67.9	177.9	264.21204	85	84	76		1.001	17.719	1952
642	103.560	104.041		0.16	0.16	1.32	0.98	0.35	89	88	76	2.35	2.10	111	0.016	100	98	62.8	0.53	2.15	15.4764662	110.7	179.4	165.1	67.9	178.6	265.54492	85	84	76		1.001	17.879	1982
643	103.721	104.197		0.16	0.16	1.32	0.99	0.35	89	88	75	2.34	2.10	110	0.017	98	95	62.1	0.76	2.17	15.4182329	111.5	180.2	165.9	67.9	179.5	264.83917	84	84	75		1.001	18.040	2014
644	103.881	104.352		0.16	0.16	1.32	0.99	0.35	89	88	76	2.35	2.10	111	0.015	103	100	61.3	0.79	2.17	15.3456802	112.2	180.9	166.5	67.9	180.2	265.99454	84	84	76		1.001	18.041	2027
645	104.041	104.508		0.16	0.16	1.33	0.98	0.35	89	88	76	2.35	2.10	110	0.016	100	97	60.8	0.51	2.15	15.4044704	112.6	181.3	166.8	67.9	180.6	265.4718	84	84	76		1.001	17.876	2016
646	104.201	104.663		0.16	0.16	1.33	0.99	0.35	89	88	76	2.32	2.00	97	0.017	96	93	60.2	0.55	2.19	15.3547688	113.4	182.1	167.5	67.9	181.4	254.15654	82	82	76		1.001	18.203	2067
647	104.363	104.820		0.16	0.16	1.33	1.00	0.35	89	88	76	2.29	2.00	89	0.015	103	99	59.8	0.42	2.13	15.392786	113.9	182.6	167.9	67.9	181.8	236.55127	81	81	76		1.001	17.715	2020
648	104.524	104.978		0.16	0.16	1.34	1.00	0.35	89	88	76	2.29	2.00	85	0.017	95	94	59.4	0.45	2.09	15.412322	114.3	182.9	168.4	68.0	182.2	227.50226	80	80	76		1.001	17.399	1991
649	104.687	105.136		0.16	0.16	1.34	1.01	0.35	89	88	76	2.25	1.90	83	0.015	103	99	59.1	0.22	2.09	15.3925514	114.2	182.8	168.2	68.0	182.1	221.27652	79	79	76		1.001	17.402	1989
650	104.849	105.295		0.16	0.16	1.34	1.00	0.35	89	88	76	2.25	2.00	84	0.015	102	100	59.0	0.14	2.11	15.4312429	114.1	182.6	168.2	67.9	182.0	212.92366	79	79	76		1.001	17.554	2005
651	105.012	105.452		0.16	0.16	1.35	1.00	0.35	89	88	76	2.25	2.00	83	0.015	103	99	58.9	0.11	2.13	15.4217281	113.9	182.5	168.1	67.9	181.9	206.80205	79	78	76		1.001	17.718	2021
652	105.175	105.611		0.16	0.16	1.35	1.01	0.35	89	88	76	2.25	1.90	82	0.016	99	97	58.7	0.18	2.03	15.4244299	113.7	182.2	168.3	67.9	181.7	202.27153	78	78	76		1.001	16.860	1920
653	105.338	105.770		0.16	0.16	1.35	1.01	0.35	89	88	76	2.23	1.90	82	0.016	99	97	58.5	0.22	1.98	15.3452864	113.5	181.9	168.2	68.0	181.4	198.81529	78	78	76		1.001	16.440	1868
654	105.502	105.929		0.16	0.16	1.36	1.02	0.35	89	88	76	2.21	1.90	81	0.016	100	97	58.6	-0.12	2.06	15.4986658	113.3	181.7	168.0	68.0	181.2	195.72972	77	77	76		1.001	17.167	1947
655	105.666	106.089		0.16	0.16	1.37	1.03	0.35	89	88	76	2.19	1.90	80	0.017	97	94	58.5	0.11	1.99	15.3258247	113.0	181.5	167.9	68.0	181.0	193.89943	77	77	76		1.001	16.585	1877
656	105.831	106.249		0.17	0.16	1.38	1.03	0.35	89	88	76	2.17	1.90	79	0.016	100	97	58.2	0.30	1.97	15.3560238	112.8	181.2	167.6	68.0	180.7	192.2435	76	76	76		1.001	16.430	1855
657	105.995	106.409		0.16	0.16	1.38	1.04	0.35	89	88	76	2.18	1.90	79	0.016	100	97	58.3	-0.14	2.06	15.3742123	112.5	181.0	167.4	68.0	180.5	190.06305	76	76	76		1.001	17.157	1933
658	106.159	106.571		0.16	0.16	1.38	1.04	0.35	89	88	76	2.16	1.90	78	0.016	99	98	58.3	0.02	2.05	15.3837404	112.2	180.7	167.1	68.0	180.2	187.71661	75	75	76		1.001	17.103	1922
659	106.325	106.732		0.17	0.16	1.38	1.04	0.35	89	88	76	2.16	1.80	78	0.017	98	95	58.3	0.05	2.05	15.4311953	112.0	180.4	166.9	68.0	179.9	185.17813	75	75	76		1.001	17.067	1913
660	106.490	106.893		0.16	0.16	1.38	1.04	0.35	89	88	76	2.16	1.80	78	0.016	100	98	58.2	0.03	2.01	15.3743095	111.7	180.1	166.7	68.0	179.6	182.82452	74	75	76		1.001	16.747	1872
661	106.654	107.054		0.16	0.16	1.29	1.05	0.35	89	88	75	2.08	1.80	78	0.016	99	98	58.3	-0.02	2.03	15.5074301	111.4	179.8	166.4	68.0	179.3	180.3185	74	75	75		1.001	16.900	1884
662	106.813	107.217		0.16	0.16	1.29	1.05	0.35	89	88	76	2.08	1.80	78	0.015	100	102	58.3	0.01	1.97	15.2690001	111.1	179.5	166.1	68.0	179.1	178.12364	74	74	76		1.001	16.425	1826
663	106.972	107.379		0.16	0.16	1.30	1.06	0.35	89	88	76	2.08	1.80	78	0.016	96	98	58.2	0.08	2.03	15.3914223	110.7	179.2	165.9	68.0	178.7	176.06841	74	74	76		1.001	16.907	1874
664	107.131	107.541		0.16	0.16	1.29	1.06	0.35	89	88	76	2.06	1.80	77	0.014	103	105	58.2	-0.01	2.01	15.4022579	110.4	178.9	165.5	68.0	178.4	173.93503	74	74	76		1.001	16.747	1851
665	107.291	107.703		0.16	0.16	1.29	1.06	0.35	89	88	76	2.06	1.80	77	0.014	104	105	58.3	-0.07	2.01	15.431283	110.0	178.5	165.2	68.0	178.0	171.89038	74	74	76		1.001	16.749	1845
666	107.451	107.866		0.16	0.16	1.30	1.07	0.35	89	88	76	2.07	1.80	77	0.014	104	106	58.3	-0.03	2.03	15.3927975	109.7	178.1	164.9	68.0	177.7	169.87239	74	75	76		1.001	16.909	1856
667	107.611	108.030		0.16	0.16	1.29	1.07	0.35	89	88	76	2.06	1.80	77	0.015	100	103	58.2	0.04	2.07	15.3547916	109.3	177.7	164.5	68.0	177.3	167.92252	74	75	76		1.001	17.233	1885
668	107.771	108.193		0.16	0.16	1.29	1.07	0.35	89	88	76	2.07	1.80	77	0.016	97	99	58.2	0.05	2.03	15.3927526	108.9	177.4	164.2	68.0	176.9	165.99622	74	75	76		1.001	16.904	1843
669	107.930	108.356		0.16	0.16	1.30	1.08	0.35	89	88	76	2.08	1.80	77	0.016	96	99	58.3	-0.08	1.99	15.3927708	108.5	176.9	163.9	68.0	176.5	164.18091	74	75	76		1.001	16.585	1802

Elapsed Time	Particulate Sampling Data																	Fuel Weight, lb		Flow, gpm		Temperature Data, oF													
	Gas Meter Cubic Feet (1)	Gas Meter Cubic Feet (2)	Gas Meter Cubic Feet (amb)	Sample Rate, cfm (1)	Sample Rate, cfm (2)	Orifice dH (1)	Orifice dH (2)	Orifice dH (amb)	Meter oF (1)	Meter oF (2)	Meter oF (amb)	Meter Vac. In. Hg. (1)	Meter Vac. In. Hg. (2)	Dilution Tunnel Temp.	Dilution Tunnel dP	Pro. Rate (%) (1)	Pro. Rate (%) (2)	Scale Reading	Weight Change	Load Side Liquid Flow Rate	Boiler Side Liquid Flow Rate (optional)	Thermopile ΔT	Boiler to Heat Exch. Temp.	Heat Exch to Boiler Temp.	Inlet Load Temp.	Outlet Load Temp.	Stack	Filter (1)	Filter (2)	Ambient		Specific Heat of Inlet Water (BTU/lb-°F)	Mass Flow Rate of Inlet Water (lb/min)	Heat Output, Btu
670	108.090	108.520		0.16	0.16	1.29	1.08	0.35	89	88	76	2.06	1.70	77	0.016	97	99	58.3	0.00	1.99	15.3457527	108.2	176.7	163.6	68.0	176.2	162.4196	74	75	76		1.001	16.585	1796
671	108.250	108.685		0.16	0.17	1.28	1.08	0.35	89	88	76	2.05	1.70	77	0.016	97	100	58.2	0.03	2.01	15.3927994	107.8	176.2	163.3	68.0	175.8	160.75308	74	75	76		1.001	16.746	1807
672	108.409	108.849		0.16	0.16	1.29	1.09	0.35	89	88	76	2.06	1.70	77	0.016	96	99	58.4	-0.11	2.05	15.4220867	107.4	175.8	162.9	68.0	175.4	159.08394	74	75	76		1.001	17.072	1835
673	108.569	109.015		0.16	0.17	1.29	1.09	0.35	89	88	75	2.05	1.70	77	0.016	97	101	58.3	0.09	1.97	15.3837538	106.9	175.4	162.5	68.0	174.9	157.47543	74	75	75		1.001	16.422	1757
674	108.728	109.179		0.16	0.16	1.30	1.09	0.35	89	88	76	2.07	1.70	77	0.015	100	103	58.4	-0.14	1.99	15.4889736	106.5	175.0	162.1	68.0	174.5	156.02823	75	75	76		1.001	16.587	1769
675	108.888	109.344		0.16	0.16	1.30	1.09	0.35	89	88	76	2.05	1.70	77	0.016	97	100	58.3	0.14	2.05	15.3893499	106.1	174.6	161.8	68.0	174.1	154.52405	75	75	76		1.001	17.071	1813
676	109.048	109.505		0.16	0.16	1.30	1.04	0.35	89	88	76	2.06	1.60	77	0.015	100	101	58.4	-0.11	2.03	15.4313459	105.7	174.2	161.5	68.0	173.8	153.02931	75	75	76		1.001	16.909	1790
677	109.208	109.666		0.16	0.16	1.30	1.04	0.35	89	88	76	2.06	1.60	77	0.015	100	101	58.2	0.17	2.05	15.3559818	105.3	173.8	161.1	68.1	173.3	151.66251	75	75	76		1.001	17.075	1799
678	109.368	109.828		0.16	0.16	1.30	1.04	0.35	89	88	76	2.05	1.60	77	0.015	100	101	58.3	-0.14	1.99	15.412426	104.9	173.4	160.8	68.1	173.0	150.18398	75	75	76		1.001	16.583	1741
679	109.528	109.989		0.16	0.16	1.30	1.04	0.35	89	88	76	2.05	1.60	77	0.015	100	101	58.4	-0.02	2.03	15.3332415	104.4	173.0	160.3	68.1	172.5	148.82816	75	75	76		1.001	16.909	1768
680	109.688	110.150		0.16	0.16	1.30	1.04	0.35	89	88	75	2.05	1.60	77	0.016	97	98	58.5	-0.17	2.03	15.4217844	104.0	172.5	160.0	68.1	172.0	147.55804	75	75	75		1.001	16.910	1760
681	109.849	110.311		0.16	0.16	1.29	1.04	0.35	89	88	76	2.07	1.60	77	0.017	95	95	58.4	0.12	1.99	15.4312115	103.6	172.1	159.6	68.1	171.7	146.28413	75	75	76		1.001	16.582	1720
682	110.008	110.473		0.16	0.16	1.30	1.04	0.35	89	88	76	2.06	1.60	76	0.014	103	105	58.5	-0.08	2.09	15.4024534	103.1	171.6	159.2	68.1	171.2	145.14638	75	75	76		1.001	17.392	1796
683	110.168	110.633		0.16	0.16	1.30	1.04	0.35	89	88	76	2.06	1.60	77	0.016	97	97	58.3	0.16	2.01	15.4692869	102.7	171.2	158.9	68.1	170.8	143.95613	75	75	76		1.001	16.755	1724
684	110.328	110.795		0.16	0.16	1.29	1.04	0.35	89	88	76	2.06	1.60	76	0.015	100	101	58.4	-0.05	2.02	15.4603558	102.2	170.8	158.4	68.1	170.3	142.85877	75	75	76		1.001	16.780	1718
685	110.488	110.957		0.16	0.16	1.29	1.04	0.35	89	88	76	2.05	1.60	76	0.015	100	101	58.5	-0.14	2.00	15.3743143	101.9	170.4	158.1	68.1	170.0	141.76035	75	75	76		1.001	16.663	1699
686	110.648	111.118		0.16	0.16	1.30	1.04	0.35	89	88	76	2.05	1.60	76	0.016	97	98	58.5	0.08	2.02	15.3355036	101.4	169.9	157.7	68.1	169.5	140.70195	75	75	76		1.001	16.835	1709
687	110.808	111.278		0.16	0.16	1.30	1.04	0.35	89	88	75	2.05	1.60	76	0.016	97	97	58.5	-0.05	2.01	15.3550777	101.0	169.5	157.4	68.1	169.1	139.66051	75	75	75		1.001	16.748	1693
688	110.968	111.440		0.16	0.16	1.30	1.04	0.35	89	88	75	2.07	1.60	76	0.015	100	101	58.5	0.03	2.07	15.4260931	100.6	169.1	156.9	68.1	168.7	138.63524	75	75	75		1.001	17.220	1734
689	111.127	111.602		0.16	0.16	1.30	1.04	0.35	89	88	75	2.06	1.60	76	0.015	99	101	58.2	0.23	2.05	15.3488626	100.0	168.6	156.3	68.1	168.1	137.84932	75	75	75		1.001	17.081	1711
690	111.287	111.762		0.16	0.16	1.30	1.04	0.35	89	88	75	2.05	1.60	76	0.016	97	97	58.2	0.01	2.03	15.3639698	99.6	168.2	156.0	68.1	167.8	137.11261	75	75	75		1.001	16.901	1686
691	111.447	111.923		0.16	0.16	1.30	1.04	0.35	89	88	75	2.05	1.60	76	0.015	100	101	58.5	-0.28	2.01	15.4022398	99.2	167.7	155.7	68.1	167.3	136.1297	75	75	75		1.001	16.770	1665
692	111.607	112.085		0.16	0.16	1.30	1.04	0.35	89	88	75	2.05	1.60	76	0.015	100	101	58.7	-0.17	2.02	15.4789391	98.8	167.3	155.3	68.1	166.9	135.32445	75	75	75		1.001	16.783	1659
693	111.767	112.246		0.16	0.16	1.30	1.04	0.35	89	88	76	2.06	1.60	76	0.014	104	104	58.4	0.29	2.07	15.4589863	98.2	166.9	154.4	68.1	166.3	134.4028	75	75	76		1.001	17.242	1695
694	111.927	112.407		0.16	0.16	1.30	1.04	0.35	89	88	76	2.07	1.60	76	0.015	100	101	59.0	-0.57	2.25	15.3837738	97.8	166.4	154.0	68.1	165.9	133.54723	75	75	76		1.001	18.689	1829
695	112.088	112.568		0.16	0.16	1.30	1.04	0.35	89	88	76	2.05	1.60	76	0.015	101	101	58.6	0.38	2.13	15.4126167	97.3	165.9	153.6	68.1	165.4	132.94859	75	75	76		1.001	17.730	1727
696	112.248	112.730		0.16	0.16	1.29	1.04	0.35	89	88	76	2.05	1.60	76	0.016	97	98	58.6	-0.01	2.19	15.3552599	96.9	165.5	153.3	68.1	165.0	132.23731	75	75	76		1.001	18.206	1766
697	112.408	112.891		0.16	0.16	1.30	1.04	0.35	89	88	75	2.07	1.60	76	0.015	100	101	58.5	0.08	2.15	15.3165941	96.5	165.2	152.9	68.1	164.6	131.4903	75	75	75		1.001	17.877	1727
698	112.568	113.052		0.16	0.16	1.29	1.04	0.35	89	88	76	2.05	1.60	76	0.015	100	101	58.7	-0.21	2.13	15.3453722	96.0	164.6	152.5	68.1	164.1	130.71251	75	75	76		1.001	17.720	1703
699	112.728	113.213		0.16	0.16	1.29	1.04	0.35	89	88	76	2.06	1.60	76	0.015	100	101	58.7	0.00	2.13	15.3778362	95.5	164.2	152.1	68.1	163.7	129.9267	75	75	76		1.001	17.720	1695
700	112.887	113.375		0.16	0.16	1.29	1.04	0.35	89	88	76	2.07	1.60	76	0.016	96	98	58.6	0.10	2.09	15.4653072	95.1	163.8	151.7	68.1	163.2	128.98283	75	75	76		1.001	17.395	1657
701	113.047	113.536		0.16	0.16	1.30	1.04	0.35	89	88	76	2.05	1.60	76	0.015	100	101	58.6	-0.02	2.23	15.4022665	94.6	163.2	151.2	68.1	162.7	128.10832	75	75	76		1.001	18.529	1755
702	113.207	113.697		0.16	0.16	1.30	1.04	0.35	89	88	75	2.05	1.60	76	0.016	97	98	58.7	-0.09	2.13	15.4022512	94.3	162.9	150.9	68.1	162.4	127.4816	75	75	75		1.001	17.721	1673
703	113.367	113.859		0.16	0.16	1.30	1.04	0.35	89	88	75	2.06	1.60	76	0.016	97	98	58.6	0.17	2.15	15.3086348	93.8	162.5	150.6	68.1	161.9	126.9239	75	75	75		1.001	17.883	1680
704	113.526	114.020		0.16	0.16	1.29	1.01	0.35	89	88	76	2.07	1.70	84	0.016	97	98	58.6	-0.01	2.21	15.356863	93.3	161.9	150.0	68.1	161.4	144.64427	76	76	76		1.001	18.368	1715
705	113.685	114.177		0.16	0.16	1.26	0.98	0.35	89	88	76	2.15	1.80	90	0.015	101	99	58.1	0.52	2.17	15.383955	92.9	161.5	149.5	68.1	161.0	164.92798	77	78	76		1.001	18.040	1677
706	113.842	114.332		0.16	0.15	1.25	0.96	0.35	89	88	75	2.18	1.90	91	0.015	100	98	57.6	0.46	2.09	15.4278355	92.4	161.1	149.2	68.1	160.5	176.73135	77	77	75		1.001	17.396	1610
707	113.998	114.485		0.16	0.15	1.24	0.95	0.35	89	88	75	2.20	1.90	92	0.017	93	91	57.1	0.50	2.15	15.363821	91.9	160.6	148.6	68.1	160.0	187.81972	77	77	75		1.001	17.884	1645
708	114.154	114.639		0.16	0.15	1.24	0.95	0.35	89	88	76	2.22	1.90	95	0.014	103	101	56.5	0.56	2.15	15.269146	91.6	160.3	148.3	68.1	159.7	201.88965	77	77	76		1.001	17.881	1640
709	114.309	114.793		0.16	0.15	1.24	0.95	0.35	89	88	76	2.20	1.90	98	0.016	96	95	55.9	0.59	2.21	15.3642902	91.6	160.3	148.4	68.1	159.7	215.60718	78	77	76		1.001	18.367	1685
710	114.469	114.951		0.16	0.16	1.34	1.09	0.35	89	88	75	2.29	2.10	101	0.015	102	101	55.2	0.71	2.17	15.3549156	91.9	160.7	148.6	68.1	160.0	225.32408	78	78	75		1.001	18.044	1660
711	114.630	115.115		0.16	0.16	1.35	1.10	0.35	89	88	75	2.28	2.00	102	0.016	100	102	54.7	0.50	2.19	15.4218254	92.3	161.1	148.9	68.1	160.4	232.74509	78	78	75		1.001	18.208	1683
712	114.793	115.279		0.16	0.16	1.36	1.10	0.35	89	88	75	2.28	2.00	104	0.015	105	105	54.3	0.49	2.17	15.3743362	92.7	161.4	149.2	68.1	160.8	237.90111	78	78	75		1.001	18.043	1674
713	114.955	115.444		0.16	0.17	1.36	1.11	0.35	89	88	75	2.28	2.00	105	0.015	104	106	53.7	0.53	2.21	15.3262711	93.1	161.8	149.5	68.1	161.2	242.22841	78	79	75		1.001	18.368	1712
714	115.117	115.610		0.16	0.17	1.35	1.11	0.35	89	88	75	2.26	2.00	106	0.016	101	103	53.0	0.74	2.13	15.3742981	93.6	162.4	150.0	68.1	161.7	245.30942	79	79	75		1.001	17.719	1661
715	115.279	115.774		0.16	0.16	1.36	1.09	0.35	89	88	75	2.29	2.00	107	0.016	101	102	52.4	0.55	2.15	15.4126644	94.1	162.9	150.4	68.1	162.1	248.98933	79	80	75		1.001	17.882	1684
716	115.441	115.937		0.16	0.16	1.35	1.08	0.35	89	88	75	2.29	2.10	108	0.016	101	102	51.6	0.78	2.25	15.3837242	94.7	163.5	150.9	68.1	162.8	251.97858	80	80	75		1.001	18.691	1772
717	115.602	116.099		0.16	0.16	1.34	1.07	0.35	89	88	75	2.32	2.10	109	0.014	107	108	50.7	0.91	2.23	15.4403267	95.2	164.0	151.4	68.1	163.3	254.19695	80	80	75		1.001	18.531	1767
718	115.763	116.260		0.16	0.16	1.32	1.04	0.35	89	88	75	2.34	2.20	109	0.016	100	100	50.2	0.56	2.21	15.3453064	95.9	164.7	152.0	68.1	163.9	255.03104	81	81	75		1.001	18.368	1763
719	115.923	116.419		0.16	0.16	1.32	1.01	0.35	89	88	75	2.37	2.30	109	0.016	100	99	49.7	0.50	2.21	15.4406376	96.7	165.5	152.7	68.1	164.7	256.00937	81	81	75		1.001	18.368	1778
720	116.082	116.575		0.16	0.16	1.30	0.99	0.35	89	88	75	2.39	2.40	108	0.016	99	97	49.0	0.66	2.32	15.3837538	97.3	166.1	153.2	68.0	165.4	254.48483	81	81	75		1.001	19.338	1884
721	116.242	116.730		0.16	0.16	1.29	0.96	0.35	89	88	75	2.42	2.50	108	0.016	100	97	48.2	0.82	2.34	15.4022236	97.9	166.7	153.8	68.0	166.0	254.23647	81	81	75		1.001	19.500	1912
722	116.400	116.883		0.16	0.15	1.28	0.95	0.35	89	88	75	2.45	2.50	109	0.016	99	95	47.5	0.71	2.25	15.4217081	98.6	167.4	154.3	68.0	166.6	256.71222	82	81	75		1.001	18.692	1844
723	116.557	117.036		0.16	0.15	1.27	0.93	0.35	89	88	75	2.46	2.60	110	0.016	98	96	47.0	0.45	2.30	15.3927975	99.3	168.1	154.9	68.0	167.3	257.84659	82	81	75		1.001	19.178	1907
724	116.714	117.187		0.16	0.15	1.27	0.91	0.35	89	88	75	2.48	2.60	110	0.014	105	101	46.3	0.69	2.23	15.4219065	100.1	168.9	155.6	68.0	168.1	259.76175	82	82	75		1.001	18.532	1856
725	116.871	117.336		0.16	0.15	1.26	0.89	0.35	89	88	75	2.49	2.70	110	0.016	98	93	45.5	0.86	2.21	15.430727	100.8	169.6	156.2	68.0	168.8	260.24451	82	82	75		1.001	18.368	1854
726	117.028	117.483		0.16	0.15	1.25	0.86	0.35	89	88	75	2.52	2.80	110	0.015	101	95	44.7	0.76	2.13	15.3838034	101.4	170.2	156.7	68.0	169.5	260.05606	82	82	75		1.001	17.719	1799
727	117.183	117.627		0.16	0.14	1.24	0.83	0.35	89	88	75	2.57	3.00	109	0.016	97	90	44.0	0.73	2.25	15.3927727	102.1	170.8	157.3	68.0	170.1	259.1131	82	82	75		1.001	18.691	1910
728	117.338	117.769		0.15	0.14	1.22	0.79	0.35	89	88	75	2.61	3.20	110	0.016	97	89	43.2	0.82	2.19	15.3743181	102.8	171.6	157.9	68.0	170.8	261.73474	83	82	75		1.001	18.205	1874
729	117.491	117.908		0.15	0.14	1.21	0.75	0.35	89	88	75	2.62	3.30	108	0.014	102	93	42.4	0.72	2.27	15.3743296	103.4	172.2	158.5	68.0	171.4	258.15613	82	82	75		1.001	18.856	1952
730	117.645	118.041		0.15	0.13	1.19	0.70	0.35	89	88	75	2.67	3.50	109	0.016	96	83	41.8	0.65	2.23	15.4004974	103.9	172.7	158.9	68.0	171.9	258.16605	83	82	75		1.001	18.531	1928
731	117.796	118.173		0.15	0.13	1.19	0.67	0.35	89	88	75	2.70	3.60	112	0.015	98	85	41.3	0.46	2.23	15.4309425	104.4	173.2	159.3	68.0	172.4	263.50525	83	82	75		1.001	18.530	1938

Elapsed Time	Particulate Sampling Data																	Fuel Weight, lb		Flow, gpm		Temperature Data, oF												
	Gas Meter Cubic Feet (1)	Gas Meter Cubic Feet (2)	Gas Meter Cubic Feet (amb)	Sample Rate, cfm (1)	Sample Rate, cfm (2)	Orifice dH (1)	Orifice dH (2)	Orifice dH (amb)	Meter oF (1)	Meter oF (2)	Meter oF (amb)	Meter Vac. In. Hg. (1)	Meter Vac. In. Hg. (2)	Dilution Tunnel Temp.	Dilution Tunnel dP	Pro. Rate (%) (1)	Pro. Rate (%) (2)	Scale Reading	Weight Change	Load Side Liquid Flow Rate	Boiler Side Liquid Flow Rate (optional)	Thermopile ΔT	Boiler to Heat Exch. Temp.	Heat Exch to Boiler Temp.	Inlet Load Temp.	Outlet Load Temp.	Stack	Filter (1)	Filter (2)	Ambient		Specific Heat of Inlet Water (BTU/lb-°F)	Mass Flow Rate of Inlet Water (lb/min)	Heat Output, Btu
732	117.948	118.300		0.15	0.13	1.17	0.64	0.35	89	88	75	2.72	3.80	113	0.017	92	77	40.6	0.76	2.21	15.4220552	105.2	174.1	160.1	68.0	173.2	266.0864	83	82	75		1.001	18.366	1935
733	118.098	118.425		0.15	0.13	1.17	0.61	0.35	89	88	75	2.74	3.90	113	0.015	97	81	39.7	0.88	2.32	15.4537172	106.1	174.9	160.9	68.0	174.1	267.75873	83	82	75		1.001	19.337	2055
734	118.249	118.547		0.15	0.12	1.16	0.58	0.35	89	88	75	2.76	4.10	114	0.016	95	76	39.2	0.51	2.21	15.4126959	107.0	175.8	161.6	68.0	175.0	269.28684	83	82	75		1.001	18.366	1967
735	118.399	118.666		0.15	0.12	1.15	0.56	0.35	89	88	75	2.79	4.20	113	0.016	94	75	38.5	0.68	2.27	15.2978563	107.6	176.4	162.1	68.0	175.6	267.83231	83	81	75		1.001	18.855	2031
736	118.549	118.783		0.15	0.12	1.13	0.54	0.35	89	88	75	2.84	4.30	114	0.016	94	73	37.7	0.82	2.19	15.3259468	108.4	177.2	162.8	68.0	176.4	269.45639	83	81	75		1.001	18.206	1977
737	118.696	118.899		0.15	0.12	1.12	0.53	0.35	89	88	75	2.87	4.40	114	0.015	95	75	37.1	0.58	2.25	15.3929691	109.0	177.9	163.3	68.0	177.0	270.30377	83	81	75		1.001	18.690	2040
738	118.844	119.015		0.15	0.12	1.10	0.52	0.35	89	88	76	2.89	4.40	114	0.016	93	73	36.4	0.70	2.15	15.3863592	110.0	178.7	164.3	68.0	178.0	270.7897	83	81	76		1.001	17.883	1969
739	118.990	119.127		0.15	0.11	1.10	0.50	0.35	89	88	75	2.93	4.50	114	0.016	91	70	35.7	0.70	2.15	15.4227085	110.7	179.4	164.9	68.0	178.6	271.06705	83	81	75		1.001	17.879	1981
740	119.136	119.238		0.15	0.11	1.09	0.49	0.35	89	88	75	2.95	4.60	114	0.016	91	70	35.1	0.58	2.17	15.3743067	111.4	180.2	165.6	68.0	179.4	271.86676	83	81	75		1.001	18.041	2013
741	119.282	119.350		0.15	0.11	1.07	0.60	0.35	89	88	75	2.99	5.50	115	0.016	92	70	34.5	0.61	2.17	15.3453722	112.1	180.9	166.1	68.0	180.1	272.33093	83	81	75		1.001	18.046	2025
742	119.432	119.491		0.15	0.14	1.26	0.80	0.35	89	88	75	3.37	6.70	115	0.016	94	88	33.8	0.66	2.15	15.3929844	112.7	181.5	166.7	68.0	180.7	272.88458	83	80	75		1.001	17.881	2018
743	119.591	119.638		0.16	0.15	1.36	1.00	0.35	89	88	75	3.02	5.50	96	0.016	98	91	33.5	0.38	2.21	15.468832	113.5	182.2	167.4	67.9	181.5	251.89714	81	80	75		1.001	18.369	2088
744	119.756	119.804		0.17	0.17	1.40	1.18	0.35	89	88	75	2.92	4.30	90	0.014	108	109	33.1	0.39	2.15	15.4305887	113.8	182.5	167.6	67.9	181.7	235.12613	80	79	75		1.001	17.879	2037
745	119.920	119.971		0.16	0.17	1.27	1.08	0.35	89	88	75	2.64	3.10	87	0.016	100	102	32.9	0.21	2.21	15.3357248	114.0	182.7	167.8	67.9	182.0	225.37132	80	79	75		1.001	18.370	2097
746	120.081	120.132		0.16	0.16	1.32	1.06	0.35	89	88	75	2.75	2.80	85	0.017	95	95	32.6	0.28	2.21	15.4022417	114.0	182.6	167.8	67.9	181.9	217.9765	80	78	75		1.001	18.369	2096
747	120.242	120.297		0.16	0.16	1.35	1.10	0.35	89	88	75	2.64	2.70	84	0.016	98	101	32.4	0.18	2.15	15.402215	113.7	182.4	167.7	67.9	181.7	212.19188	79	78	75		1.001	17.878	2036
748	120.405	120.462		0.16	0.17	1.36	1.10	0.35	89	88	76	2.63	2.70	83	0.015	103	104	32.3	0.17	2.17	15.3927879	113.5	182.2	167.5	67.9	181.4	207.74059	79	78	76		1.001	18.044	2051
749	120.569	120.630		0.16	0.17	1.37	1.14	0.35	89	88	75	2.60	2.50	82	0.016	100	102	32.2	0.00	2.13	15.4140148	113.3	181.9	167.3	67.9	181.2	203.72614	78	77	75		1.001	17.720	2010
750	120.733	120.797		0.16	0.17	1.37	1.13	0.35	89	88	75	2.57	2.60	81	0.016	100	102	32.1	0.14	2.19	15.3354855	113.0	181.7	167.0	67.9	181.0	200.40456	77	77	75		1.001	18.203	2060
751	120.897	120.962		0.16	0.17	1.33	1.08	0.35	89	88	75	2.50	2.50	81	0.016	100	100	32.1	-0.02	2.21	15.2409315	112.7	181.4	166.8	67.9	180.7	197.23286	77	77	75		1.001	18.365	2073
752	121.060	121.133		0.16	0.17	1.36	1.16	0.35	89	88	75	2.41	2.20	79	0.015	102	107	32.0	0.17	2.11	15.469492	112.5	181.2	166.6	67.9	180.4	195.96147	76	77	75		1.001	17.559	1978
753	121.224	121.302		0.16	0.17	1.32	1.08	0.35	89	88	75	2.34	2.10	78	0.015	103	106	31.9	0.10	2.21	15.4074526	112.2	180.9	166.3	67.9	180.2	194.18648	76	77	75		1.001	18.369	2064
754	121.385	121.464		0.16	0.16	1.32	1.06	0.35	89	88	75	2.32	2.00	78	0.016	98	98	31.9	-0.01	2.17	15.4021654	111.9	180.6	166.1	67.9	179.9	192.12965	76	77	75		1.001	18.046	2023
755	121.546	121.627		0.16	0.16	1.31	1.05	0.35	89	88	75	2.32	2.00	78	0.015	101	102	31.9	-0.01	2.13	15.3649616	111.6	180.2	165.9	67.9	179.5	189.6664	76	77	75		1.001	17.723	1981
756	121.707	121.789		0.16	0.16	1.32	1.05	0.35	89	88	75	2.33	2.00	78	0.014	104	105	31.9	-0.03	2.13	15.3851376	111.3	179.9	165.6	67.9	179.2	187.08847	76	77	75		1.001	17.719	1974
757	121.868	121.951		0.16	0.16	1.32	1.06	0.35	89	88	75	2.31	2.00	78	0.018	92	93	31.8	0.12	2.19	15.3648043	111.0	179.6	165.3	67.9	178.9	184.54446	76	77	75		1.001	18.202	2022
758	122.029	122.113		0.16	0.16	1.31	1.06	0.35	89	88	75	2.32	2.00	78	0.016	98	98	32.0	-0.17	2.15	15.3641844	110.6	179.3	164.9	67.9	178.6	182.15712	76	77	75		1.001	17.884	1981
759	122.191	122.276		0.16	0.16	1.31	1.05	0.35	89	88	75	2.33	2.00	78	0.016	98	99	31.8	0.14	2.17	15.363862	110.2	178.8	164.5	67.9	178.1	179.84813	76	77	75		1.001	18.052	1992
760	122.351	122.438		0.16	0.16	1.31	1.05	0.35	89	88	74	2.31	2.00	77	0.015	100	101	31.9	-0.07	2.11	15.4123716	109.8	178.5	164.3	67.9	177.8	177.50166	76	77	74		1.001	17.564	1932
761	122.512	122.600		0.16	0.16	1.31	1.06	0.35	89	88	74	2.31	2.00	77	0.014	104	105	32.0	-0.12	2.13	15.4022198	109.4	178.0	163.9	67.9	177.3	175.25401	76	77	74		1.001	17.725	1941
762	122.674	122.763		0.16	0.16	1.32	1.06	0.35	89	88	74	2.32	2.00	77	0.015	101	102	31.9	0.07	2.15	15.3355398	109.0	177.6	163.4	67.9	176.9	173.11853	76	77	74		1.001	17.890	1953
763	122.835	122.925		0.16	0.16	1.31	1.06	0.35	89	88	74	2.32	2.00	77	0.014	104	105	31.9	0.02	2.19	15.38486	108.6	177.1	163.1	67.9	176.5	171.09773	76	77	74		1.001	18.212	1980
764	122.996	123.088		0.16	0.16	1.31	1.06	0.35	89	88	74	2.32	2.00	77	0.016	98	99	32.0	-0.03	2.07	15.3457575	108.2	176.8	162.8	67.9	176.1	169.14682	76	77	74		1.001	17.237	1867
765	123.157	123.250		0.16	0.16	1.32	1.05	0.35	89	88	74	2.30	2.00	77	0.015	101	101	32.0	-0.04	2.15	15.3202715	107.8	176.3	162.4	67.9	175.6	167.19981	76	76	74		1.001	17.889	1930
766	123.318	123.412		0.16	0.16	1.32	1.06	0.35	89	88	74	2.31	2.00	77	0.015	101	101	32.0	-0.04	2.17	15.3742895	107.3	175.9	162.1	67.9	175.2	165.30583	76	76	74		1.001	18.058	1940
767	123.479	123.575		0.16	0.16	1.32	1.06	0.35	89	88	74	2.31	2.00	77	0.014	104	106	31.9	0.10	2.13	15.4404144	106.9	175.4	161.7	67.9	174.7	163.48668	76	76	74		1.001	17.691	1893
768	123.641	123.738		0.16	0.16	1.32	1.06	0.35	89	88	74	2.31	2.00	77	0.014	105	106	32.0	-0.06	2.23	15.4021988	106.4	174.9	161.2	67.9	174.3	161.66597	76	76	74		1.001	18.597	1981
769	123.802	123.900		0.16	0.16	1.32	1.06	0.35	89	88	74	2.30	2.00	77	0.016	98	98	32.2	-0.17	2.19	15.4023857	106.0	174.6	160.9	67.9	173.9	159.92203	76	76	74		1.001	18.217	1934
770	123.964	124.062		0.16	0.16	1.32	1.06	0.35	89	88	74	2.31	2.00	77	0.015	101	101	32.2	-0.01	2.21	15.3355198	105.6	174.1	160.5	67.9	173.5	158.24823	76	76	74		1.001	18.378	1943
771	124.125	124.225		0.16	0.16	1.32	1.06	0.35	89	88	74	2.30	2.00	76	0.016	97	99	32.2	-0.01	2.17	15.4216108	105.2	173.7	160.2	67.9	173.0	156.59976	76	76	74		1.001	18.025	1898
772	124.286	124.388		0.16	0.16	1.32	1.06	0.35	89	88	74	2.31	2.00	76	0.017	95	96	32.2	0.02	2.17	15.3859148	104.6	173.2	159.7	67.9	172.5	155.08847	76	76	74		1.001	18.075	1893
773	124.448	124.551		0.16	0.16	1.32	1.06	0.35	89	88	74	2.31	2.00	76	0.016	98	99	32.0	0.15	2.21	15.4603605	104.2	172.7	159.2	67.9	172.0	153.56126	76	76	74		1.001	18.375	1916
774	124.609	124.713		0.16	0.16	1.32	1.06	0.35	89	88	74	2.31	2.00	76	0.016	97	98	32.2	-0.16	2.10	15.3358011	103.7	172.3	158.9	67.9	171.6	152.21063	76	76	74		1.001	17.457	1813
775	124.770	124.875		0.16	0.16	1.32	1.06	0.35	89	88	74	2.32	2.00	76	0.014	104	105	32.1	0.07	2.12	15.3574982	103.3	171.8	158.5	67.9	171.1	150.74005	75	76	74		1.001	17.664	1826
776	124.932	125.038		0.16	0.16	1.32	1.06	0.35	88	88	74	2.32	2.00	76	0.016	98	99	32.1	0.05	2.14	15.390708	102.8	171.4	158.1	67.9	170.7	149.36339	75	76	74		1.001	17.821	1835
777	125.093	125.201		0.16	0.16	1.32	1.06	0.35	89	88	74	2.32	2.00	76	0.016	97	99	32.2	-0.14	2.17	15.4125185	102.4	171.0	157.7	67.9	170.3	147.90453	75	76	74		1.001	18.077	1854
778	125.255	125.364		0.16	0.16	1.32	1.06	0.35	89	88	74	2.30	2.00	76	0.016	98	99	32.2	-0.02	2.23	15.3641863	101.8	170.4	157.2	67.9	169.7	146.5549	75	76	74		1.001	18.538	1890
779	125.416	125.526		0.16	0.16	1.32	1.06	0.35	89	88	74	2.32	2.00	76	0.015	101	101	32.3	-0.10	2.20	15.4215794	101.4	170.0	156.9	67.9	169.3	145.30609	75	76	74		1.001	18.271	1856
780	125.577	125.688		0.16	0.16	1.32	1.06	0.35	89	88	74	2.30	2.00	76	0.016	97	98	32.2	0.12	2.12	15.4509134	100.9	169.5	156.5	67.9	168.8	144.12729	75	76	74		1.001	17.685	1787
781	125.739	125.851		0.16	0.16	1.32	1.06	0.35	89	88	74	2.31	2.00	76	0.015	101	102	32.4	-0.25	2.20	15.4506502	100.6	169.1	156.2	67.9	168.5	142.95834	75	76	74		1.001	18.302	1843
782	125.900	126.014		0.16	0.16	1.32	1.06	0.35	88	88	74	2.32	2.00	76	0.016	98	99	32.3	0.11	2.12	15.392662	100.0	168.5	155.6	67.9	167.8	141.85559	75	76	74		1.001	17.671	1768
783	126.062	126.176		0.16	0.16	1.33	1.06	0.35	89	88	74	2.30	2.00	76	0.017	95	95	32.3	0.00	2.12	15.4194365	99.4	168.0	155.2	67.9	167.3	140.79892	75	76	74		1.001	17.611	1753
784	126.223	126.339		0.16	0.16	1.32	1.06	0.35	88	88	73	2.30	2.00	76	0.016	98	99	32.4	-0.06	2.08	15.375001	99.0	167.6	154.8	67.9	166.9	139.68481	75	75	73		1.001	17.301	1716
785	126.384	126.501		0.16	0.16	1.33	1.06	0.35	88	88	74	2.30	2.00	76	0.016	98	98	32.6	-0.18	2.17	15.3546677	98.6	167.1	154.9	67.9	166.5	138.86931	75	75	74		1.001	18.058	1783
786	126.546	126.665		0.16	0.16	1.32	1.06	0.35	88	88	74	2.31	2.00	76	0.015	101	103	32.5	0.03	2.13	15.4125681	98.2	166.7	154.1	67.9	166.1	137.91721	75	75	74		1.001	17.746	1745
787	126.707	126.827		0.16	0.16	1.32	1.06	0.35	88	88	73	2.32	2	76	0.014	104	105	32.4	0.13	2.17	15.3639526	97.8	166.4	153.8	67.9	165.7	137.01775	75	75	73		1.001	18.054	1768
788	126.869	126.989		0.16	0.16	1.32	1.06	0.35	88	88	73	2.32	2	76	0.014	105	105	32.4	-0.01	2.17	15.4121008	97.2	165.7	153.2	67.9	165.1	136.16257	75	75	73		1.001	18.061	1758
789	127.030	127.152		0.16	0.16	1.33	1.06	0.35	88	88	74	2.3	2	76	0.015	101	102	32.3	0.13	2.17	15.3930769	96.7	165.2	152.8	67.9	164.6	135.56004	75	75	74		1.001	18.093	1752
790	127.192	127.314		0.16	0.16	1.33	1.06	0.35	88	87	73	2.31	2	76	0.016	98	98	32.5	-0.26	2.15	15.4280491	96.3	164.9	152.4	67.8	164.2	134.62605	75	75	73		1.001	17.871	1724
791	127.353	127.478		0.16	0.16	1.33	1.06	0.35	88	87	73	2.3	2	76	0.015	101	103	32.5	0.08	2.19	15.3926687	95.9	164.4	152.0	67.8	163.7	133.59531	75	75	73		1.001	18.190	1746
792	127.515	127.640		0.16	0.16	1.32	1.06	0.35	88	87	73	2.3	2	75	0.014	105	105	32.6	-0.09	2.11	15.3356657	95.4	163.9	151.6	67.8	163.3	132.9693	75	75	73		1.001	17.575	1679
793	127.676	127.802		0.16	0.16	1.33	1.06	0.35	88	87	73	2.3	2	75	0.015	101	101	32.5	0.07	2.25	15.3738632	95.0	163.4	151.2	67.8	162.8	132.36211	75	75	73		1.001	18.692	1777

Elapsed Time	Particulate Sampling Data																	Fuel Weight, lb		Flow, gpm		Temperature Data, oF												
	Gas Meter Cubic Feet (1)	Gas Meter Cubic Feet (2)	Gas Meter Cubic Feet (amb)	Sample Rate, cfm (1)	Sample Rate, cfm (2)	Orifice dH (1)	Orifice dH (2)	Orifice dH (amb)	Meter oF (1)	Meter oF (2)	Meter oF (amb)	Meter Vac. In. Hg. (1)	Meter Vac. In. Hg. (2)	Dilution Tunnel Temp.	Dilution Tunnel dP	Pro. Rate (%) (1)	Pro. Rate (%) (2)	Scale Reading	Weight Change	Load Side Liquid Flow Rate	Boiler Side Liquid Flow Rate (optional)	Thermopile ΔT	Boiler to Heat Exch. Temp.	Heat Exch to Boiler Temp.	Inlet Load Temp.	Outlet Load Temp.	Stack	Filter (1)	Filter (2)	Ambient		Specific Heat of Inlet Water (BTU/lb-°F)	Mass Flow Rate of Inlet Water (lb/min)	Heat Output, Btu
794	127.838	127.965		0.16	0.16	1.32	1.07	0.35	88	87	74	2.3	2	75	0.015	101	102	32.6	-0.09	2.13	15.36409	94.5	162.9	150.9	67.8	162.3	131.56485	75	75	74		1.001	17.735	1678
795	127.999	128.128		0.16	0.16	1.33	1.06	0.35	88	87	73	2.3	2	75	0.014	104	106	32.6	-0.03	2.19	15.3354244	94.0	162.4	150.4	67.8	161.8	130.85054	75	75	73		1.001	18.213	1714
796	128.160	128.291		0.16	0.16	1.33	1.06	0.35	88	87	73	2.32	2	75	0.014	104	106	32.6	0.03	2.15	15.3844614	93.6	162.1	150.1	67.8	161.4	130.11057	75	75	73		1.001	17.894	1677
797	128.318	128.446		0.16	0.16	1.16	0.83	0.35	88	87	73	2.74	2.8	87	0.015	100	98	32.5	0.10	2.11	15.4020681	93.1	161.6	149.6	67.8	161.0	155.50378	76	77	73		1.001	17.572	1638
798	128.466	128.585		0.15	0.14	1.05	0.72	0.35	88	87	73	3.03	3.3	88	0.016	91	85	31.9	0.56	2.17	15.3948345	92.6	161.1	149.2	67.9	160.5	169.14493	76	76	73		1.001	18.060	1674
799	128.609	128.715		0.14	0.13	1.02	0.65	0.35	88	87	73	3.14	3.6	90	0.016	88	80	31.7	0.21	2.15	15.3813858	92.1	160.6	148.7	67.9	160.0	178.70711	76	76	73		1.001	17.900	1651
800	128.751	128.841		0.14	0.13	1.02	0.60	0.35	88	87	73	3.14	3.8	91	0.015	90	80	31.0	0.72	2.21	15.439558	91.8	160.3	148.4	67.9	159.6	187.80685	76	76	73		1.001	18.382	1689
801	128.892	128.963		0.14	0.12	1.04	0.58	0.35	88	87	73	3.12	4	93	0.015	90	78	30.7	0.34	2.13	15.4020596	91.6	160.1	148.2	67.8	159.4	197.62505	76	76	73		1.001	17.730	1626
802	129.035	129.083		0.14	0.12	1.07	0.58	0.35	88	87	73	3.01	3.9	95	0.015	91	77	30.2	0.45	2.21	15.3741941	91.6	160.1	148.2	67.8	159.4	206.04182	76	76	73		1.001	18.380	1685
803	129.182	129.207		0.15	0.12	1.13	0.64	0.35	88	87	73	2.81	3.7	97	0.014	97	82	29.8	0.46	2.21	15.4121552	91.7	160.2	148.4	67.8	159.5	212.94949	76	76	73		1.001	18.373	1688
804	129.332	129.336		0.15	0.13	1.19	0.71	0.35	88	87	73	2.68	3.3	99	0.014	99	85	29.3	0.45	2.21	15.4310017	92.0	160.4	148.6	67.8	159.8	217.96391	77	76	73		1.001	18.383	1693
805	129.486	129.472		0.15	0.14	1.19	0.74	0.35	88	87	73	2.68	3.2	100	0.015	99	87	28.7	0.62	2.09	15.3550777	92.3	160.8	148.9	67.8	160.1	221.80418	77	77	73		1.001	17.413	1609
806	129.637	129.606		0.15	0.13	1.17	0.70	0.35	88	87	73	2.72	3.4	101	0.017	91	81	28.3	0.39	2.09	15.3563557	92.6	161.1	149.2	67.8	160.4	226.25784	77	77	73		1.001	17.412	1615
807	129.788	129.736		0.15	0.13	1.14	0.66	0.35	88	87	73	2.8	3.6	103	0.016	94	81	27.9	0.41	2.11	15.4020481	93.0	161.5	149.5	67.8	160.8	230.81073	78	77	73		1.001	17.570	1636
808	129.936	129.862		0.15	0.13	1.13	0.60	0.35	88	87	73	2.86	3.9	104	0.016	92	78	27.2	0.67	2.11	15.4219427	93.5	162.0	149.9	67.8	161.2	234.80698	78	77	73		1.001	17.575	1645
809	130.083	129.981		0.15	0.12	1.07	0.54	0.35	88	87	73	3	4.2	105	0.016	92	74	26.6	0.63	2.19	15.3637609	94.0	162.5	150.3	67.8	161.8	239.44908	78	77	73		1.001	18.220	1714
810	130.227	130.096		0.14	0.12	1.05	0.51	0.35	88	87	73	3.1	4.4	105	0.014	96	77	26.1	0.46	2.21	15.430747	94.5	163.0	150.8	67.8	162.3	242.9704	78	77	73		1.001	18.379	1739
811	130.368	130.207		0.14	0.11	1.02	0.48	0.35	88	87	73	3.19	4.5	106	0.016	88	69	25.6	0.55	2.15	15.399682	95.0	163.5	151.2	67.8	162.8	245.08392	78	77	73		1.001	17.894	1702
812	130.514	130.341		0.15	0.13	1.5	0.81	0.35	88	87	73	1.9	6.7	106	0.016	91	84	25.3	0.27	2.21	15.3834839	95.6	164.1	151.7	67.8	163.4	246.05388	78	77	73		1.001	18.382	1759
813	130.679	130.492		0.16	0.15	1.31	1.71	0.35	88	87	73	1.93	1.8	106	0.014	110	101	24.7	0.65	2.17	15.4402027	96.2	164.8	152.3	67.8	164.0	246.72305	78	77	73		1.001	18.057	1739
814	130.839	130.693		0.16	0.20	1.32	1.09	0.35	88	87	73	1.94	1.4	107	0.015	103	130	24.0	0.69	2.19	15.3835192	96.9	165.4	152.9	67.8	164.7	249.78532	79	78	73		1.001	18.222	1767
815	130.999	130.855		0.16	0.16	1.32	1.08	0.35	88	87	73	1.95	1.5	108	0.016	100	101	23.4	0.57	2.25	15.3360872	97.4	166.0	153.4	67.8	165.2	252.32871	79	79	73		1.001	18.704	1824
816	131.159	131.018		0.16	0.16	1.32	1.08	0.35	88	87	73	1.95	1.5	108	0.016	100	102	22.7	0.67	2.19	15.4271116	98.1	166.7	154.0	67.8	165.9	253.73554	80	79	73		1.001	18.215	1790
817	131.319	131.180		0.16	0.16	1.32	1.08	0.35	88	87	73	1.94	1.5	109	0.016	100	101	22.2	0.56	2.17	15.4120312	98.7	167.3	154.5	67.8	166.6	255.85504	80	79	73		1.001	18.057	1785
818	131.478	131.343		0.16	0.16	1.32	1.09	0.35	88	87	73	1.95	1.5	110	0.014	106	109	21.6	0.55	2.19	15.4310732	99.4	168.1	155.1	67.8	167.3	257.95633	80	80	73		1.001	18.218	1813
819	131.638	131.507		0.16	0.16	1.32	1.08	0.35	88	87	73	1.96	1.5	110	0.016	100	103	21.0	0.59	2.09	15.3689661	100.0	168.6	155.7	67.8	167.9	260.01538	80	80	73		1.001	17.411	1744
820	131.799	131.669		0.16	0.16	1.31	1.10	0.35	88	87	73	1.95	1.5	110	0.015	104	105	20.1	0.90	2.15	15.3546295	100.7	169.4	156.3	67.8	168.6	262.4028	81	80	73		1.001	17.898	1805
821	131.959	131.830		0.16	0.16	1.31	1.06	0.35	88	87	73	1.95	1.5	111	0.015	103	104	19.5	0.66	2.21	15.3547258	101.6	170.2	157.1	67.8	169.4	263.4231	81	81	73		1.001	18.381	1870
822	132.119	131.991		0.16	0.16	1.32	1.06	0.35	88	87	73	1.95	1.5	111	0.016	100	101	19.1	0.38	2.25	15.2869444	102.4	171.0	157.7	67.8	170.2	264.65854	81	81	73		1.001	18.704	1917
823	132.278	132.153		0.16	0.16	1.31	1.05	0.35	88	87	73	1.95	1.5	111	0.016	100	101	18.3	0.76	2.19	15.3681307	103.2	171.9	158.5	67.8	171.1	265.15595	81	81	73		1.001	18.222	1883
824	132.438	132.313		0.16	0.16	1.3	1.05	0.35	88	87	73	1.97	1.5	112	0.016	100	100	17.8	0.54	2.15	15.4404345	104.1	172.7	159.2	67.8	171.9	266.37454	82	81	73		1.001	17.894	1864
825	132.597	132.474		0.16	0.16	1.31	1.05	0.35	88	87	73	1.97	1.5	112	0.016	100	101	17.2	0.60	2.23	15.4030848	104.7	173.4	159.8	67.8	172.6	266.64191	82	81	73		1.001	18.541	1944
826	132.757	132.635		0.16	0.16	1.31	1.04	0.35	88	87	73	1.97	1.5	112	0.016	100	101	16.5	0.72	2.17	15.3740053	105.6	174.2	160.5	67.8	173.4	267.56439	82	82	73		1.001	18.060	1909
827	132.916	132.795		0.16	0.16	1.31	1.05	0.35	88	87	73	1.96	1.5	112	0.016	100	100	15.9	0.59	2.11	15.3353233	106.3	175.0	161.1	67.8	174.2	268.82327	82	82	73		1.001	17.569	1870
828	133.076	132.955		0.16	0.16	1.31	1.05	0.35	88	87	73	1.96	1.5	112	0.016	100	100	15.3	0.58	2.19	15.3835649	107.0	175.6	161.7	67.8	174.8	269.63428	82	82	73		1.001	18.215	1951
829	133.235	133.116		0.16	0.16	1.32	1.05	0.35	88	87	73	1.96	1.5	113	0.016	100	101	14.6	0.68	2.11	15.4509048	107.7	176.4	162.4	67.8	175.6	270.44431	82	82	73		1.001	17.566	1895
830	133.394	133.277		0.16	0.16	1.31	1.04	0.35	88	87	73	1.97	1.5	113	0.016	100	101	14.0	0.64	2.17	15.4404097	108.4	177.1	163.0	67.9	176.3	271.36221	82	82	73		1.001	18.056	1960
831	133.554	133.437		0.16	0.16	1.32	1.06	0.35	88	87	73	1.97	1.5	113	0.017	97	97	13.2	0.74	2.17	15.3637924	109.2	177.9	163.6	67.9	177.0	272.47284	82	82	73		1.001	18.056	1973
832	133.715	133.598		0.16	0.16	1.32	1.06	0.35	88	87	73	1.98	1.5	113	0.016	101	101	12.7	0.57	2.11	15.3871117	110.0	178.7	164.4	67.9	177.9	273.26062	82	82	73		1.001	17.571	1935
833	133.875	133.760		0.16	0.16	1.31	1.06	0.35	88	87	73	1.98	1.5	113	0.015	104	105	12.3	0.42	2.17	15.3559389	110.7	179.4	165.1	67.9	178.6	272.13278	82	82	73		1.001	18.056	2001
834	134.036	133.920		0.16	0.16	1.32	1.05	0.35	88	87	73	1.99	1.5	113	0.016	101	100	11.4	0.84	2.19	15.4889078	111.4	180.1	165.6	67.9	179.3	273.289	82	82	73		1.001	18.217	2031
835	134.196	134.081		0.16	0.16	1.32	1.06	0.35	88	87	73	1.98	1.5	113	0.016	100	101	10.8	0.63	2.15	15.3543272	112.2	180.9	166.4	67.9	180.1	274.19211	82	83	73		1.001	17.895	2011
836	134.356	134.243		0.16	0.16	1.32	1.05	0.35	88	87	73	1.98	1.5	114	0.015	104	105	10.4	0.34	2.15	15.4509134	112.9	181.6	167.0	67.9	180.8	274.84866	83	83	73		1.001	17.893	2022
837	134.516	134.403		0.16	0.16	1.32	1.05	0.35	88	87	73	1.96	1.5	99	0.014	106	106	10.0	0.42	2.15	15.4690437	113.6	182.3	167.6	67.9	181.5	263.32141	82	82	73		1.001	17.895	2035
838	134.676	134.564		0.16	0.16	1.31	1.05	0.35	88	87	73	1.97	1.5	89	0.015	101	102	9.6	0.40	2.19	15.4118853	114.0	182.7	167.9	67.9	181.9	243.53725	81	81	73		1.001	18.219	2079
839	134.837	134.725		0.16	0.16	1.31	1.05	0.35	88	87	73	1.97	1.5	85	0.017	96	96	9.4	0.25	2.23	15.3808203	114.3	183.0	168.2	67.9	182.2	233.02666	80	80	73		1.001	18.539	2121
840	134.997	134.887		0.16	0.16	1.32	1.05	0.35	88	87	73	1.95	1.5	83	0.015	101	102	9.0	0.33	2.13	15.3425484	114.3	182.9	168.2	67.9	182.2	226.41966	79	79	73		1.001	17.734	2029
841	135.158	135.048		0.16	0.16	1.32	1.05	0.35	88	87	73	1.95	1.5	83	0.015	102	102	8.8	0.26	2.09	15.4310198	114.1	182.7	168.0	67.9	182.0	218.55197	79	79	73		1.001	17.411	1988
842	135.319	135.210		0.16	0.16	1.32	1.06	0.35	88	87	73	1.95	1.5	82	0.015	101	102	8.8	0.03	2.21	15.4219313	113.8	182.5	167.8	67.9	181.8	211.8804	79	79	73		1.001	18.377	2095
843	135.480	135.372		0.16	0.16	1.32	1.06	0.35	88	87	73	1.95	1.5	82	0.016	98	99	8.8	-0.01	2.17	15.4798899	113.5	182.2	167.4	67.9	181.5	207.10817	79	79	73		1.001	18.054	2052
844	135.641	135.535		0.16	0.16	1.32	1.06	0.35	88	87	73	1.96	1.5	81	0.016	98	99	8.7	0.05	2.17	15.3455095	113.2	181.9	167.3	67.9	181.1	203.23491	78	79	73		1.001	18.057	2047
845	135.802	135.696		0.16	0.16	1.32	1.06	0.35	88	87	73	1.94	1.5	80	0.014	105	105	8.6	0.16	2.07	15.3253469	112.9	181.6	167.0	67.9	180.8	199.90988	78	79	73		1.001	17.248	1949
846	135.963	135.858		0.16	0.16	1.32	1.06	0.35	88	87	73	1.94	1.4	79	0.015	101	102	8.5	0.02	2.19	15.2874966	112.6	181.3	166.7	67.9	180.5	198.00858	78	78	73		1.001	18.221	2055
847	136.124	136.020		0.16	0.16	1.32	1.06	0.35	88	87	73	1.95	1.4	78	0.016	98	98	8.4	0.13	2.25	15.4309359	112.3	181.0	166.5	67.9	180.2	196.56448	78	78	73		1.001	18.705	2104
848	136.285	136.184		0.16	0.16	1.32	1.06	0.35	88	87	73	1.94	1.4	78	0.017	95	97	8.4	-0.03	2.23	15.3452816	112.0	180.7	166.3	67.9	180.0	194.41472	78	78	73		1.001	18.542	2080
849	136.446	136.347		0.16	0.16	1.32	1.06	0.35	88	87	73	1.94	1.4	77	0.015	101	102	8.4	0.05	2.23	15.3835802	111.7	180.4	166.0	67.9	179.6	192.07098	78	78	73		1.001	18.543	2074
850	136.607	136.509		0.16	0.16	1.32	1.07	0.35	88	87	73	1.94	1.4	77	0.014	105	105	8.3	0.11	2.17	15.4124527	111.4	180.1	165.7	67.9	179.3	189.61987	77	78	73		1.001	18.057	2014
851	136.768	136.672		0.16	0.16	1.33	1.07	0.35	87	87	73	1.94	1.4	77	0.014	105	106	8.4	-0.07	2.19	15.3254776	111.0	179.7	165.4	67.9	178.9	187.00725	77	78	73		1.001	18.221	2026
852	136.929	136.835		0.16	0.16	1.33	1.07	0.35	88	87	73	1.95	1.4	77	0.014	105	106	8.3	0.05	2.21	15.4508533	110.6	179.3	165.0	67.9	178.5	184.45924	77	77	73		1.001	18.383	2036
853	137.091	136.999		0.16	0.16	1.32	1.07	0.35	87	87	73	1.95	1.4	77	0.016	99	100	8.5	-0.18	2.27	15.3635559	110.1	178.8	164.6	67.9	178.0	182.03542	77	77	73		1.001	18.871	2081
854	137.252	137.162		0.16	0.16	1.32	1.06	0.35	87	87	73	1.93	1.4	77	0.015	101	102	8.4	0.04	2.15	15.4019308	109.7	178.4	164.3	67.9	177.6	179.69313	77	77	73		1.001	17.899	1966
855	137.413	137.324		0.16	0.16	1.32	1.07	0.35	87	87	73	1.93	1.4	77	0.014	105	105	8.4	0.06	2.15	15.3068724	109.4	178.1	163.9	67.9	177.3	177.48798	77	77	73		1.001	17.899	1960

Elapsed Time	Particulate Sampling Data																		Fuel Weight, lb		Flow, gpm		Temperature Data, oF													
	Gas Meter Cubic Feet (1)	Gas Meter Cubic Feet (2)	Gas Meter Cubic Feet (amb)	Sample Rate, cfm (1)	Sample Rate, cfm (2)	Orifice dH (1)	Orifice dH (2)	Orifice dH (amb)	Meter oF (1)	Meter oF (2)	Meter oF (amb)	Meter Vac. In. Hg. (1)	Meter Vac. In. Hg. (2)	Dilution Tunnel Temp.	Dilution Tunnel dP	Pro. Rate (%) (1)	Pro. Rate (%) (2)	Scale Reading	Weight Change	Load Side Liquid Flow Rate	Boiler Side Liquid Flow Rate (optional)	Thermopile ΔT	Boiler to Heat Exch. Temp.	Heat Exch to Boiler Temp.	Inlet Load Temp.	Outlet Load Temp.	Stack	Filter (1)	Filter (2)	Ambient		Specific Heat of Inlet Water (BTU/lb-°F)	Mass Flow Rate of Inlet Water (lb/min)	Heat Output, Btu
856	137.574	137.487		0.16	0.16	1.32	1.07	0.35	87	87	73	1.93	1.4	77	0.014	105	106	8.3	0.10	2.19	15.3925676	108.9	177.5	163.5	67.9	176.8	175.26622	76	77	73		1.001	18.222	1986
857	137.736	137.650		0.16	0.16	1.33	1.07	0.35	87	87	73	1.93	1.4	77	0.014	105	106	8.2	0.04	2.11	15.3910017	108.5	177.2	163.2	67.9	176.4	173.08275	76	77	73		1.001	17.570	1909
858	137.897	137.814		0.16	0.16	1.33	1.07	0.35	87	87	73	1.93	1.4	76	0.015	101	103	8.3	-0.08	2.17	15.3545437	108.0	176.7	162.7	67.9	175.9	170.98154	76	77	73		1.001	18.060	1953
859	138.058	137.977		0.16	0.16	1.33	1.07	0.35	87	87	73	1.93	1.40	76	0.014	105	106	8.4	-0.03	2.17	15.3835468	107.6	176.3	162.4	67.9	175.5	168.98671	76	77	73		1.001	18.062	1946
860	138.220	138.140		0.16	0.16	1.33	1.07	0.35	87	87	73	1.94	1.40	76	0.014	105	106	8.4	-0.02	2.15	15.395792	107.2	175.8	162.0	67.9	175.1	167.05209	76	76	73		1.001	17.897	1921
861	138.381	138.302		0.16	0.16	1.33	1.07	0.35	87	87	73	1.94	1.40	76	0.016	98	98	8.4	-0.04	2.07	15.3868341	106.7	175.4	161.6	67.9	174.6	165.21758	76	76	73		1.001	17.250	1843
862	138.542	138.466		0.16	0.16	1.33	1.07	0.35	87	87	73	1.93	1.40	76	0.017	95	97	8.6	-0.15	2.15	15.3636189	106.3	174.9	161.3	67.9	174.2	163.39853	76	76	73		1.001	17.898	1905
863	138.703	138.630		0.16	0.16	1.33	1.07	0.35	87	87	73	1.93	1.40	76	0.016	98	100	8.5	0.04	2.17	15.4025707	105.9	174.5	160.9	67.9	173.8	161.65044	76	76	73		1.001	18.058	1914
864	138.865	138.792		0.16	0.16	1.33	1.07	0.35	87	86	73	1.94	1.40	76	0.015	102	102	8.4	0.15	2.17	15.4256153	105.4	174.1	160.5	67.9	173.3	159.98114	76	76	73		1.001	18.024	1902
865	139.026	138.955		0.16	0.16	1.33	1.07	0.35	87	87	73	1.94	1.40	76	0.014	105	106	8.6	-0.23	2.20	15.4394541	105.0	173.7	160.1	67.9	172.9	158.32361	76	76	73		1.001	18.273	1920
866	139.187	139.118		0.16	0.16	1.33	1.07	0.35	87	87	73	1.94	1.40	76	0.014	105	106	8.6	0.03	2.20	15.3640242	104.5	173.1	159.7	67.9	172.4	156.78439	76	76	73		1.001	18.322	1916
867	139.349	139.281		0.16	0.16	1.33	1.07	0.35	87	86	73	1.94	1.40	76	0.015	102	102	8.5	0.05	2.12	15.4544859	104.0	172.6	159.2	67.9	171.9	155.25829	75	76	73		1.001	17.631	1835
868	139.510	139.445		0.16	0.16	1.33	1.07	0.35	87	86	73	1.94	1.40	76	0.017	95	97	8.4	0.08	2.17	15.4020033	103.6	172.2	158.9	67.9	171.5	153.77577	75	76	73		1.001	18.062	1873
869	139.671	139.607		0.16	0.16	1.33	1.07	0.35	87	86	73	1.93	1.40	76	0.014	105	105	8.7	-0.22	2.21	15.345521	103.0	171.7	158.4	67.9	171.0	152.31172	75	76	73		1.001	18.372	1895
870	139.833	139.770		0.16	0.16	1.33	1.07	0.35	87	86	73	1.94	1.40	76	0.014	105	106	8.5	0.20	2.14	15.3452024	102.6	171.2	158.1	67.9	170.5	150.87041	75	76	73		1.001	17.769	1825
871	139.994	139.933		0.16	0.16	1.33	1.07	0.35	87	86	73	1.94	1.40	76	0.017	95	96	8.7	-0.27	2.16	15.3925447	102.2	170.8	157.7	67.9	170.1	149.38962	75	75	73		1.001	18.011	1843
872	140.155	140.096		0.16	0.16	1.33	1.07	0.35	87	86	73	1.94	1.40	76	0.014	105	106	8.6	0.11	2.16	15.4124708	101.7	170.4	157.2	67.9	169.6	148.05602	75	75	73		1.001	17.941	1827
873	140.317	140.260		0.16	0.16	1.33	1.07	0.35	87	86	73	1.93	1.40	76	0.015	102	103	8.7	-0.06	2.10	15.3353167	101.3	169.9	157.0	67.9	169.2	146.74703	75	75	73		1.001	17.491	1773
874	140.478	140.422		0.16	0.16	1.33	1.07	0.35	87	86	73	1.93	1.40	75	0.015	101	102	8.6	0.06	2.17	15.3831186	100.8	169.4	156.5	67.9	168.7	145.46407	75	75	73		1.001	18.059	1822
875	140.639	140.585		0.16	0.16	1.33	1.07	0.35	87	86	74	1.94	1.40	75	0.015	101	102	8.7	-0.12	2.14	15.4124613	100.3	169.0	156.0	67.9	168.2	144.19753	75	75	74		1.001	17.783	1786
876	140.801	140.748		0.16	0.16	1.33	1.07	0.35	87	86	74	1.94	1.40	76	0.015	102	102	8.8	-0.01	2.25	15.4649239	99.8	168.5	155.6	67.9	167.7	143.04138	75	75	74		1.001	18.703	1869
877	140.962	140.911		0.16	0.16	1.33	1.07	0.35	87	86	74	1.93	1.40	76	0.016	98	99	8.7	0.11	2.17	15.4399548	99.3	168.0	155.2	67.9	167.2	141.86009	75	75	74		1.001	18.051	1795
878	141.124	141.075		0.16	0.16	1.33	1.07	0.35	87	86	74	1.94	1.40	76	0.015	102	103	8.6	0.05	2.16	15.3639364	98.8	167.5	154.8	67.9	166.8	140.7486	75	75	74		1.001	18.007	1781
879	141.285	141.238		0.16	0.16	1.33	1.06	0.35	87	86	74	1.95	1.40	76	0.016	98	99	8.7	-0.13	2.17	15.3615427	98.4	167.0	154.4	67.9	166.3	139.87427	75	75	74		1.001	18.051	1778
880	141.446	141.400		0.16	0.16	1.33	1.07	0.35	87	86	74	1.93	1.40	76	0.014	105	105	8.7	0.04	2.16	15.4186707	97.9	166.5	154.0	67.9	165.8	138.84682	75	75	74		1.001	17.944	1758
881	141.608	141.563		0.16	0.16	1.33	1.07	0.35	87	86	74	1.94	1.40	76	0.015	102	102	8.8	-0.12	2.22	15.3166666	97.5	166.1	153.6	67.9	165.4	137.78978	75	75	74		1.001	18.488	1805
882	141.769	141.726		0.16	0.16	1.32	1.07	0.35	87	86	74	1.93	1.40	76	0.014	105	106	8.7	0.11	2.17	15.363596	96.9	165.6	153.1	67.9	164.9	137.10812	75	75	74		1.001	18.025	1749
883	141.930	141.890		0.16	0.16	1.32	1.07	0.35	87	86	74	1.93	1.40	75	0.014	104	106	8.9	-0.16	2.20	15.36415	96.5	165.2	152.8	67.9	164.5	136.15984	75	75	74		1.001	18.269	1766
884	142.092	142.053		0.16	0.16	1.33	1.07	0.35	87	86	74	1.94	1.40	75	0.016	98	99	8.9	-0.02	2.19	15.4309921	96.0	164.7	152.4	68.0	164.0	135.49408	75	75	74		1.001	18.195	1750
885	142.253	142.216		0.16	0.16	1.33	1.07	0.35	87	86	74	1.94	1.40	75	0.016	98	99	8.8	0.09	2.25	15.3323059	95.6	164.3	152.0	68.0	163.6	134.65007	75	75	74		1.001	18.723	1792
886	142.414	142.378		0.16	0.16	1.33	1.07	0.35	87	86	74	1.93	1.40	75	0.015	101	102	8.8	-0.01	2.13	15.4314203	95.1	163.8	151.5	67.9	163.0	133.7674	75	75	74		1.001	17.753	1690
887	142.576	142.541		0.16	0.16	1.33	1.07	0.35	87	86	74	1.94	1.40	75	0.015	102	102	9.0	-0.18	2.07	15.4019508	94.6	163.3	151.1	67.9	162.6	132.86169	75	75	74		1.001	17.252	1634
888	142.737	142.705		0.16	0.16	1.33	1.07	0.35	87	86	74	1.94	1.40	75	0.015	101	103	8.9	0.09	2.16	15.3353682	94.1	162.8	150.7	67.9	162.1	132.07283	75	75	74		1.001	17.945	1691
889	142.898	142.868		0.16	0.16	1.33	1.06	0.35	87	86	74	1.94	1.40	75	0.015	101	102	8.8	0.04	2.15	15.4013453	93.7	162.3	150.2	67.9	161.6	131.28742	75	75	74		1.001	17.894	1678
890	143.060	143.030		0.16	0.16	1.31	1.06	0.35	87	86	74	1.95	1.40	83	0.016	99	99	8.8	0.05	2.17	15.4349995	93.2	161.8	149.9	67.9	161.1	145.96356	75	75	74		1.001	18.072	1686
891	143.220	143.192		0.16	0.16	1.32	1.06	0.35	87	86	74	1.94	1.40	88	0.016	98	100	8.5	0.30	2.23	15.3741264	92.9	161.5	149.7	67.9	160.8	164.61504	76	77	74		1.001	18.560	1726
892	143.381	143.355		0.16	0.16	1.32	1.07	0.35	87	86	74	1.96	1.40	89	0.016	99	100	8.1	0.41	2.15	15.4318237	92.3	161.0	149.0	67.9	160.3	178.61923	76	76	74		1.001	17.890	1654
893	143.542	143.517		0.16	0.16	1.33	1.06	0.35	87	86	74	1.95	1.40	91	0.015	102	103	7.4	0.64	2.13	15.3741541	91.9	160.5	148.8	67.9	159.9	190.5062	76	76	74		1.001	17.731	1632
894	143.702	143.680		0.16	0.16	1.32	1.07	0.35	87	86	74	1.94	1.40	94	0.017	96	98	7.0	0.46	2.17	15.3256893	91.8	160.4	148.6	67.9	159.7	202.9751	76	76	74		1.001	18.057	1659
895	143.863	143.842		0.16	0.16	1.32	1.08	0.35	87	87	74	1.96	1.40	96	0.014	107	107	6.4	0.55	2.15	15.3657751	91.8	160.5	148.7	67.9	159.7	212.65234	76	76	74		1.001	17.896	1645
896	144.024	144.004		0.16	0.16	1.32	1.08	0.35	87	87	73	1.94	1.40	98	0.017	97	97	5.9	0.48	2.19	15.3209543	92.1	160.8	148.9	67.9	160.1	219.32468	77	77	73		1.001	18.221	1681
897	144.185	144.167		0.16	0.16	1.32	1.07	0.35	87	86	73	1.96	1.40	100	0.016	100	101	5.4	0.52	2.11	15.3640604	92.5	161.2	149.2	67.9	160.4	225.29846	77	77	73		1.001	17.570	1627
898	144.346	144.330		0.16	0.16	1.32	1.07	0.35	87	86	73	1.96	1.40	101	0.016	100	101	5.0	0.39	2.25	15.4408855	93.0	161.7	149.6	67.9	160.9	230.25162	77	77	73		1.001	18.699	1740
899	144.506	144.491		0.16	0.16	1.32	1.07	0.35	87	86	73	1.94	1.40	103	0.016	100	100	4.5	0.52	2.05	15.3782282	93.6	162.2	150.6	67.9	161.5	234.76839	78	78	73		1.001	17.082	1600
900	144.667	144.654		0.16	0.16	1.32	1.07	0.35	87	86	73	1.96	1.50	103	0.016	100	102	4.0	0.57	2.21	15.41257	94.1	162.8	150.7	67.9	162.0	239.28174	78	78	73		1.001	18.380	1731
901	144.827	144.817		0.16	0.16	1.33	1.07	0.35	87	87	73	1.96	1.40	105	0.016	100	102	3.5	0.43	2.17	15.4077787	94.6	163.3	151.1	67.9	162.5	243.78284	78	78	73		1.001	18.057	1710
902	144.988	144.979		0.16	0.16	1.33	1.07	0.35	87	86	73	1.96	1.40	106	0.016	101	101	3.1	0.47	2.15	15.4103813	95.2	163.9	151.5	67.9	163.1	246.89375	78	78	73		1.001	17.893	1705
903	145.149	145.141		0.16	0.16	1.33	1.07	0.35	87	86	73	1.96	1.50	106	0.014	107	108	2.5	0.57	2.21	15.317872	95.8	164.5	152.1	67.9	163.7	249.56825	78	79	73		1.001	18.380	1763
904	145.309	145.303		0.16	0.16	1.33	1.07	0.35	87	86	73	1.94	1.50	107	0.017	97	98	2.2	0.31	2.21	15.4615097	96.5	165.2	152.7	67.9	164.4	252.03763	79	79	73		1.001	18.381	1775
905	145.469	145.466		0.16	0.16	1.33	1.07	0.35	87	86	73	1.96	1.50	107	0.015	103	105	1.6	0.54	2.15	15.484931	97.2	166.0	153.3	67.9	165.1	253.94066	79	79	73		1.001	17.898	1742
906	145.630	145.628		0.16	0.16	1.33	1.07	0.35	87	86	73	1.97	1.50	108	0.016	101	101	1.0	0.61	2.11	15.383585	97.9	166.6	153.9	67.9	165.8	255.70557	79	79	73		1.001	17.571	1722
907	145.791	145.790		0.16	0.16	1.32	1.07	0.35	87	86	73	1.95	1.50	109	0.017	98	98	0.5	0.53	2.21	15.4120626	98.6	167.3	154.5	67.9	166.4	257.34122	79	79	73		1.001	18.383	1814
908	145.952	145.952	213.068	0.16	0.16	1.33	1.07	0.35	87	86	73	1.97	1.50	109	0.016	101	101	-0.2	0.71	2.05	15.4691448	99.3	168.0	155.2	67.9	167.2	258.77713	79	80	73		1.001	17.088	1699
	145.952	145.952	213.068			1.32	1.04	0.35	89	88	76			91	0.016					2.11	15.40	103.4	171.9	158.8	67.9	171.3		79.21	79.39		#DIV/0!			1812
																																	TOTAL:	1645743

TF_{avg}	161.614
TI_{avg}	162.472

OMNI-Test Laboratories, Inc.

Manufacturer:	Central Boiler	**Technicians:**	B. Davis
Model:	Edge 760		
Date:	08/08/19		
Run:	2		
Control #:	0117WB039E		
Test Duration:	908		
Output Category:	III		

Test Results in Accordance with CSA B415.1-09

	HHV Basis	LHV Basis
Overall Efficiency	82.8%	89.2%
Combustion Efficiency	97.6%	97.6%
Heat Transfer Efficiency	85%	91.3%

Output Rate (kJ/h)	109,318	103,700	**(Btu/h)**
Burn Rate (kg/h)	6.64	14.64	**(lb/h)**
Input (kJ/h)	132,056	125,270	**(Btu/h)**

Test Load Weight (dry kg)	100.49	221.48	**dry lb**
MC wet (%)	18.63303499		
MC dry (%)	22.90		
Particulate (g)	71.06		
CO (g)	3,443		
Test Duration (h)	15.13		

Emissions	Particulate	CO
g/MJ Output	N/A	2.08
g/kg Dry Fuel	N/A	34.26
g/h	N/A	227.50
lb/MM Btu Output	N/A	4.84

Air/Fuel Ratio (A/F)	11.48

VERSION: **2.3** **3/23/2010**

VERSION:	2.3	3/23/2010		
Manufacturer:	Central Boiler		Appliance Type:	Non-Cat
Model:	Edge 760			
Date:	8/8/2019		Temp. Units	F (F or C)
Run:	2		Weight Units	lb (kg or lb)
Control #:	0117WB039E			
Test Duration:	908			
Output Category:	III		Fuel Data	
				Oak
Wood Moisture (% wet):	18.63		HHV	19,887 kJ/kg
Load Weight (lb wet):	272.20		%C	50
Burn Rate (dry kg/h):	6.64		%H	6.6
Total Particulate Emissions:	71.06 g		%O	43.2
			%Ash	0.2

	Averages	0.54	8.72	#DIV/0!	198.01	75.85
					Temp. (ºF)	
Elapsed Time (min)	Fuel Weight Remaining (lb)	Flue Gas Composition (%) CO	CO_2	O_2	Flue Gas	Room Temp
0	272.20	0.04	15.35		247.1	75.0
1	271.20	0.24	8.27		226.9	75.0
2	270.26	0.14	3.61		215.0	75.0
3	269.19	1.94	5.71		233.3	75.0
4	268.32	0.38	18.72		246.6	75.0
5	267.52	0.03	14.45		248.5	75.0
6	266.80	0.03	14.17		250.9	75.0
7	266.23	0.03	13.98		252.1	75.0
8	265.50	0.03	13.65		253.7	75.0
9	264.65	0.04	13.60		255.5	75.0
10	263.94	0.03	13.74		255.4	75.0
11	263.24	0.05	16.14		254.5	75.0
12	262.60	0.05	15.64		256.7	76.0
13	261.74	0.04	14.52		259.0	76.0
14	260.88	0.03	14.42		258.8	75.0
15	260.07	0.04	15.85		258.6	75.0
16	259.63	0.04	15.97		258.5	75.0
17	258.84	0.04	15.88		259.0	76.0
18	258.13	0.04	15.79		259.4	76.0
19	257.29	0.04	15.71		259.2	76.0
20	256.64	0.04	15.51		260.2	76.0
21	255.82	0.04	15.32		259.7	76.0

22	255.21	0.04	15.53		260.8	76.0
23	254.50	0.04	15.23		262.3	76.0
24	253.79	0.03	14.46		262.5	76.0
25	253.12	0.03	14.33		255.8	76.0
26	252.84	0.01	12.86		236.1	76.0
27	252.61	0.01	10.46		224.7	76.0
28	252.43	0.05	8.99		217.5	76.0
29	252.45	0.05	9.43		211.1	76.0
30	252.37	0.03	6.64		205.6	76.0
31	252.41	0.02	5.31		201.1	76.0
32	252.15	0.02	4.55		197.6	76.0
33	252.24	0.02	3.92		194.4	76.0
34	252.15	0.03	3.68		192.3	76.0
35	252.19	0.03	3.20		191.1	76.0
36	252.35	0.11	2.60		189.1	76.0
37	252.16	0.22	3.23		186.9	76.0
38	252.24	0.33	4.00		184.5	76.0
39	252.18	0.40	4.47		182.0	76.0
40	252.10	0.46	4.65		179.5	76.0
41	252.17	0.52	4.47		177.1	76.0
42	252.13	0.56	4.19		174.8	76.0
43	252.10	0.56	3.88		172.7	76.0
44	252.16	0.55	3.58		170.7	76.0
45	252.09	0.53	3.26		168.7	76.0
46	252.24	0.49	2.96		166.7	76.0
47	252.30	0.45	2.69		164.8	76.0
48	252.10	0.41	2.45		163.2	76.0
49	252.31	0.37	2.22		161.415	76
50	252.23	0.33	2.04		159.773	76
51	252.33	0.3	1.88		158.198	76
52	252.28	0.27	1.73		156.641	76
53	252.20	0.24	1.58		155.305	76
54	252.14	0.23	1.46		153.789	76
55	252.26	0.2	1.33		152.396	77
56	252.33	0.19	1.22		151.071	77
57	252.27	0.17	1.12		149.693	77
58	252.31	0.16	1.04		148.467	77
59	252.37	0.15	0.97		147.166	77
60	252.36	0.14	0.91		145.92	77
61	252.36	0.13	0.86		144.774	77
62	252.35	0.13	0.81		143.661	77
63	252.39	0.12	0.78		142.503	77

64	252.42	0.11	0.74		141.557	77
65	252.50	0.11	0.71		140.65	77
66	252.35	0.11	0.69		139.702	77
67	252.50	0.1	0.68		138.637	77
68	252.47	0.1	0.66		137.776	77
69	252.43	0.1	0.65		136.959	77
70	252.59	0.1	0.64		136.019	77
71	252.36	0.1	0.63		135.389	77
72	252.57	0.1	0.63		134.633	77
73	252.47	0.1	0.63		133.775	77
74	252.54	0.1	0.63		132.731	77
75	252.58	0.1	0.64		132.057	77
76	252.40	0.1	0.65		131.406	77
77	252.55	0.1	0.65		130.681	77
78	252.54	0.1	0.66		130.016	77
79	252.44	0.1	0.67		129.284	77
80	252.48	0.11	0.68		138.537	77
81	252.03	1.84	10.11		164.906	77
82	251.16	2.92	12.51		181.734	77
83	250.54	0.37	16.89		200.611	77
84	249.90	0.08	16.03		215.645	77
85	248.88	0.06	16.75		227.943	77
86	248.20	0.07	17.77		237.38	77
87	247.19	0.07	18.31		242.822	77
88	246.34	0.07	17.85		244.014	77
89	245.47	0.06	17.27		246.517	77
90	244.54	0.05	15.88		246.417	77
91	243.72	0.07	16.24		246.203	77
92	242.96	0.07	16.98		246.58	77
93	242.03	0.07	17.25		248.222	77
94	241.25	0.07	17.13		250.215	77
95	240.43	0.05	15.59		251.131	77
96	239.63	0.05	15		251.275	77
97	238.82	0.05	15.02		251.211	77
98	238.12	0.06	15.57		250.238	77
99	237.15	0.06	16.63		251.467	77
100	236.45	0.06	16.91		252.034	77
101	235.56	0.05	16.25		254.12	77
102	234.79	0.04	15.32		255.113	76
103	234.08	0.03	14.67		255.983	76
104	233.25	0.03	14.31		255.877	76
105	232.43	0.03	14.26		255.589	76

106	231.81	0.04	14.55		255.542	77
107	230.98	0.04	15.27		255.761	77
108	230.15	0.04	15.95		255.889	77
109	229.49	0.04	16.34		256.939	77
110	228.68	0.04	16.01		257.058	77
111	227.97	0.04	16.04		257.361	77
112	227.16	0.04	16.01		257.57	77
113	226.44	0.04	15.9		257.686	77
114	225.59	0.04	15.95		258.763	77
115	225.02	0.04	15.87		260.122	77
116	224.30	0.03	15.45		260.365	77
117	223.44	0.03	15.58		260.384	77
118	222.58	0.03	15.49		260.877	77
119	221.95	0.03	15.4		261.214	77
120	221.33	0.03	15.39		261.707	77
121	220.36	0.03	15.37		263.089	77
122	219.78	0.03	14.68		263.189	77
123	219.00	0.03	14.89		263.412	77
124	218.18	0.03	14.71		264.465	77
125	217.55	0.02	13.51		241.341	77
126	217.32	0.02	13.64		227.783	77
127	217.13	0.16	13.23		219.044	77
128	216.73	0.26	14.36		212.247	77
129	216.85	0.11	11.16		207.484	77
130	216.43	0.08	10.24		203.261	77
131	216.42	0.04	8.67		199.644	77
132	216.34	0.04	7.31		196.687	77
133	216.34	0.05	6.56		193.873	77
134	216.30	0.05	5.59		192.881	77
135	216.27	0.2	4.42		190.932	77
136	216.23	0.55	5.86		188.806	77
137	216.20	0.77	6.91		186.462	77
138	216.23	0.85	7.22		184.078	77
139	216.24	0.85	7.21		181.833	77
140	216.21	0.8	6.88		179.572	77
141	216.03	0.76	6.36		177.385	77
142	216.13	0.69	5.76		175.228	77
143	216.18	0.66	5.22		173.124	77
144	216.13	0.6	4.58		171.19	77
145	216.16	0.54	4.02		169.291	77
146	216.15	0.48	3.53		167.424	77
147	216.22	0.44	3.11		165.649	77

148	216.11	0.39	2.78		163.967	77
149	216.11	0.36	2.52		162.347	77
150	216.25	0.33	2.32		160.814	77
151	216.11	0.3	2.12		159.323	77
152	216.26	0.28	1.95		157.845	77
153	216.33	0.26	1.81		156.34	77
154	216.23	0.24	1.69		154.969	77
155	216.27	0.23	1.6		153.454	77
156	216.26	0.22	1.53		152.03	77
157	216.43	0.21	1.48		150.749	77
158	216.26	0.21	1.43		149.439	77
159	216.33	0.2	1.39		148.322	77
160	216.23	0.2	1.38		147.111	77
161	216.28	0.2	1.38		146.023	77
162	216.36	0.2	1.38		144.962	77
163	216.23	0.2	1.4		143.879	77
164	216.42	0.2	1.42		142.833	77
165	216.52	0.21	1.47		141.673	77
166	216.39	0.21	1.51		140.987	77
167	216.34	0.22	1.55		139.962	77
168	216.46	0.22	1.6		139.082	77
169	216.42	0.23	1.64		138.238	77
170	216.47	0.23	1.68		137.285	77
171	216.46	0.23	1.72		136.586	77
172	216.64	0.22	1.71		135.81	77
173	216.50	0.22	1.69		134.965	77
174	216.46	0.22	1.71		134.335	77
175	216.50	0.23	1.77		133.437	77
176	216.56	0.23	1.76		132.971	77
177	216.53	0.23	1.81		132.14	77
178	216.60	0.23	1.85		131.49	77
179	216.61	0.24	1.9		130.97	76
180	216.53	0.24	1.95		130.514	77
181	216.51	0.24	2		129.599	77
182	216.64	0.24	2.01		129.002	77
183	216.58	0.25	2.06		128.541	77
184	216.60	0.25	2.1		127.826	77
185	216.56	0.25	2.1		126.964	77
186	216.69	0.25	2.16		126.345	77
187	216.64	0.26	2.18		125.836	77
188	216.57	0.25	2.19		132.868	77
189	216.08	1.2	9.89		161.343	77

190	215.41	2.58	8.26		174.867	77
191	214.91	3.18	9.02		183.825	77
192	214.32	3.21	11.27		192.272	77
193	213.83	2.96	11.3		199.758	77
194	213.23	2.63	11.46		205.57	77
195	212.53	2.69	11.24		209.545	77
196	212.12	2.41	11.48		213.532	77
197	211.50	2.23	11.89		217.703	77
198	210.78	1.67	12.61		223.645	77
199	210.25	1.21	13.47		229.644	77
200	209.51	0.94	14.02		234.545	77
201	208.67	0.47	14.84		239.879	77
202	207.99	0.1	16.23		245.048	77
203	207.19	0.09	17.01		249.724	77
204	206.37	0.08	16.75		249.452	77
205	205.58	0.09	16.93		250.453	77
206	204.64	0.1	16.9		250.402	77
207	203.93	0.09	16.69		251.021	77
208	203.14	0.09	16.8		252.629	77
209	202.24	0.07	16		252.74	77
210	201.59	0.06	15.09		253.557	77
211	200.79	0.06	14.62		254.286	77
212	199.96	0.06	14.64		253.017	77
213	199.32	0.07	15.71		253.477	77
214	198.47	0.08	16.59		253.983	77
215	197.72	0.08	16.64		253.898	77
216	197.07	0.07	16.58		254.032	77
217	196.20	0.07	16.7		254.456	77
218	195.34	0.06	16.23		253.958	77
219	194.79	0.06	16.4		254.956	77
220	194.11	0.04	14.49		253.426	77
221	193.35	0.04	14.46		254.678	77
222	192.68	0.04	14.13		255.95	77
223	191.87	0.03	14.13		256.748	77
224	191.19	0.03	14.04		257.692	77
225	190.55	0.03	13.95		259.062	77
226	189.84	0.03	13.97		260.711	77
227	189.08	0.03	13.89		260.246	77
228	188.53	0.03	13.86		260.402	77
229	187.74	0.03	13.78		259.723	77
230	187.11	0.03	14.53		259.593	77
231	186.40	0.04	15.33		259.571	77

232	185.52	0.04	15.83		260.944	77
233	184.96	0.03	14.8		263.073	77
234	184.36	0.02	13.65		262.743	77
235	183.66	0.02	13.78		262.392	77
236	182.98	0.02	13.64		262.607	77
237	182.17	0.02	13.78		261.973	77
238	181.73	0.02	13.64		258.029	77
239	181.18	0.02	13.88		237.471	77
240	180.73	0.18	15.9		225.438	77
241	180.33	2.57	16.58		217.279	77
242	179.97	2.89	17.06		211.05	77
243	179.87	0.77	14.92		205.899	77
244	179.64	0.56	15.18		201.633	77
245	179.49	0.26	13.84		198.263	77
246	179.43	0.22	12.63		195.482	77
247	179.28	0.22	12.04		193.295	77
248	178.99	0.24	9.12		191.689	77
249	179.02	1.91	10.4		189.409	77
250	178.88	3.33	12.01		187.091	77
251	178.78	3.88	12.33		184.644	77
252	178.76	4.03	12.06		182.243	77
253	178.62	4.01	11.65		179.942	77
254	178.60	3.83	10.99		177.757	77
255	178.64	3.54	10.17		175.603	77
256	178.61	3.33	9.57		173.452	77
257	178.62	3	8.74		171.436	77
258	178.71	2.72	8.01		169.534	77
259	178.61	2.45	7.41		167.731	77
260	178.66	1.41	5.39		163.598	77
261	178.58	1.33	5.83		163.134	77
262	178.57	1.17	7.4		162.208	77
263	178.53	1.17	7.11		160.905	77
264	178.59	1.13	6.43		159.528	77
265	178.50	1.08	5.77		158.18	77
266	178.50	1.01	5.2		156.7	77
267	178.51	0.93	4.65		155.283	77
268	178.73	0.86	4.21		153.809	77
269	178.65	0.76	3.69		152.43	77
270	178.71	0.69	3.31		151.209	77
271	178.66	0.63	2.97		149.965	77
272	178.66	0.57	2.67		148.64	77
273	178.65	0.51	2.39		147.434	77

274	178.61	0.48	2.22		146.279	77
275	178.74	0.45	2.06		145.005	77
276	178.70	0.42	1.93		144.134	77
277	178.64	0.4	1.84		143.18	77
278	178.77	0.39	1.75		142.137	77
279	178.75	0.37	1.66		141.143	77
280	178.84	0.35	1.59		140.139	77
281	178.84	0.34	1.54		139.392	77
282	178.77	0.33	1.49		138.518	77
283	178.87	0.32	1.43		137.699	77
284	178.85	0.32	1.4		136.638	77
285	178.84	0.31	1.36		135.928	77
286	178.83	0.31	1.36		135.135	77
287	178.85	0.3	1.31		134.576	77
288	178.86	0.3	1.29		133.859	77
289	178.78	0.29	1.26		132.752	77
290	178.71	0.29	1.26		132.244	77
291	178.87	0.29	1.24		131.427	77
292	178.94	0.29	1.25		130.791	77
293	178.99	0.29	1.24		130.318	77
294	179.05	0.29	1.26		129.541	77
295	179.06	0.3	1.27		128.959	77
296	178.84	0.3	1.29		128.236	77
297	179.04	0.3	1.29		127.406	77
298	178.91	0.32	1.35		127.128	77
299	178.96	0.32	1.35		126.261	77
300	179.01	0.33	1.4		125.928	77
301	178.95	0.34	1.44		125.876	77
302	178.54	2.94	11.59		158.129	77
303	177.84	2.91	9.14		172.753	77
304	177.32	3.46	10.75		183.562	76
305	176.74	3.16	12.42		194.28	76
306	176.27	2.61	12.1		203.003	76
307	175.61	2.42	12		209.58	76
308	175.21	2.35	12.17		215.317	76
309	174.59	1.7	12.89		221.62	76
310	173.99	0.54	13.73		227.032	77
311	173.42	0.01	1.08		232.003	77
312	172.85	0.11	14.92		236.901	77
313	172.22	0.09	15.37		241.042	77
314	171.48	0.08	15.96		244.917	77
315	171.01	0.08	16.07		247.362	77

316	170.42	0.06	14.35		247.387	77
317	169.83	0.07	16		247.16	77
318	169.09	0.07	16.08		247.726	77
319	168.33	0.08	16.13		247.873	77
320	167.78	0.08	15.95		248.416	77
321	167.10	0.08	16.11		249.705	77
322	166.52	0.07	15.68		250.954	77
323	165.82	0.05	14.09		251.976	77
324	165.28	0.05	13.88		251.385	77
325	164.53	0.07	15.19		250.726	77
326	163.99	0.07	16.18		250.791	77
327	163.32	0.06	16.42		251.533	77
328	162.57	0.05	15.11		253.348	77
329	162.03	0.04	13.78		254.734	77
330	161.39	0.04	13.88		254.535	77
331	160.71	0.04	14.15		252.74	77
332	159.92	0.04	14.73		251.985	77
333	159.43	0.05	15.81		252.319	77
334	158.84	0.05	16.31		253.24	77
335	158.05	0.06	16.3		253.498	77
336	157.38	0.05	15.95		254.249	77
337	156.81	0.05	16.04		254.714	77
338	156.22	0.05	15.53		254.746	77
339	155.52	0.05	16.2		254.896	77
340	154.77	0.04	15.93		255.687	77
341	154.37	0.04	15.8		256.047	77
342	153.65	0.03	14.37		256.334	77
343	153.15	0.04	15.2		256.54	77
344	152.57	0.04	15.12		256.849	77
345	151.94	0.04	15.16		257.126	77
346	151.22	0.03	14.84		257.763	77
347	150.76	0.03	14.06		258.373	77
348	150.25	0.03	14		258.906	77
349	149.66	0.02	12.48		242.299	77
350	149.33	0.1	16.14		227.767	77
351	148.95	0.22	15.97		219.9	77
352	148.81	4.76	14.56		213.601	77
353	148.52	5.14	16.15		206.831	77
354	148.40	0.17	12.73		201.891	77
355	148.23	0.04	11.52		198.253	77
356	148.25	0.02	10.13		195.232	77
357	148.08	0.03	9.53		192.661	77

358	147.95	0.02	8.53		191.002	77
359	147.95	0.42	6.89		189.153	77
360	147.88	1.42	8.87		186.919	77
361	147.80	2.1	9.59		184.585	77
362	147.76	2.28	9.22		182.107	77
363	147.81	2.23	8.93		179.811	77
364	147.71	2.11	9.13		177.494	77
365	147.70	1.86	8.77		175.541	77
366	147.69	1.44	8.81		173.585	77
367	147.77	1.39	7.98		171.709	77
368	147.72	1.29	7.02		169.755	77
369	147.77	1.2	6.21		167.894	77
370	147.79	1.09	5.46		166.173	77
371	147.69	0.98	4.78		164.384	77
372	147.75	0.85	4.23		162.627	77
373	147.69	0.73	4.29		161.082	77
374	147.66	0.63	4.09		159.522	77
375	147.72	0.55	3.62		157.987	77
376	147.74	0.5	3.17		156.488	77
377	147.79	0.44	2.8		154.977	77
378	147.64	0.4	2.5		153.469	77
379	147.81	0.35	2.22		152.082	77
380	147.76	0.31	1.96		150.676	77
381	147.89	0.28	1.73		149.395	77
382	147.81	0.25	1.57		148.027	77
383	147.89	0.22	1.39		146.828	77
384	147.86	0.21	1.27		145.671	77
385	147.94	0.19	1.13		144.561	77
386	147.96	0.17	1.05		143.48	77
387	147.82	0.16	0.97		142.334	77
388	148.10	0.15	0.91		141.436	77
389	148.00	0.15	0.86		140.414	77
390	147.93	0.14	0.82		139.366	77
391	147.92	0.14	0.79		138.589	76
392	148.07	0.13	0.75		137.52	77
393	147.95	0.13	0.72		136.878	77
394	148.12	0.13	0.7		136.055	77
395	148.04	0.12	0.69		135.453	77
396	148.09	0.12	0.68		134.492	77
397	148.06	0.12	0.67		133.56	77
398	147.99	0.12	0.65		132.904	76
399	148.17	0.12	0.64		132.437	77

400	148.10	0.12	0.63		131.866	77
401	148.11	0.12	0.63		130.916	77
402	148.30	0.13	0.64		130.137	77
403	148.08	0.13	0.63		129.416	77
404	148.09	0.13	0.65		128.973	76
405	148.23	0.13	0.65		127.947	77
406	148.17	0.13	0.65		127.343	77
407	147.87	1.82	7.78		155.464	77
408	147.38	2	8.95		171.878	77
409	146.75	3.81	11.86		184.094	76
410	146.15	3.44	13.51		197.7	77
411	145.65	1.92	13.83		210.425	77
412	145.02	1.01	14.35		219.477	76
413	144.49	0.75	14.56		227.19	76
414	144.09	0.59	15		233.905	77
415	143.43	0.43	15.1		239.047	76
416	142.88	0.24	15.5		243.133	76
417	142.26	0.21	15.24		245.467	76
418	141.65	0.21	15.09		247.466	76
419	141.08	0.21	15.07		249.622	76
420	140.46	0.17	14.91		251.061	77
421	139.84	0.22	14.98		252.541	76
422	139.53	0.29	14.9		252.991	77
423	138.69	0.11	14.87		253.616	77
424	138.24	0.1	14.88		254.44	76
425	137.50	0.1	14.83		255.492	76
426	137.13	0.1	14.85		257.152	76
427	136.40	0.11	14.04		256.225	77
428	135.93	0.1	14.92		258.619	76
429	135.11	0.13	14.66		260.271	76
430	134.78	0.11	13.35		259.942	76
431	134.06	0.1	14.85		259.061	76
432	133.63	0.09	15.1		259.352	76
433	132.88	0.09	14.37		259.014	76
434	132.22	0.09	14.22		259.927	76
435	131.62	0.11	13.95		261.157	76
436	131.00	0.11	15		261.596	77
437	130.42	0.1	14.66		264.524	76
438	129.84	0.1	14.6		265.996	76
439	129.02	0.09	14		265.927	76
440	128.60	0.05	13.7		265.647	76
441	127.86	0.06	14.87		263.874	76

442	127.16	0.07	15.39		265.505	76
443	126.43	0.06	15.28		266.628	76
444	125.63	0.06	14.64		267.522	76
445	124.97	0.05	13.58		268.201	76
446	124.37	0.04	12.93		268.165	76
447	123.69	0.04	12.96		265.899	76
448	123.27	0.03	12.53		242.75	76
449	122.81	0.22	14.87		229.628	76
450	122.51	1.57	15.61		220.967	76
451	122.23	2.14	16.47		214.108	76
452	122.19	0.69	12.98		208.59	77
453	121.86	0.36	13.12		204.17	76
454	121.76	0.15	11.67		200.591	76
455	121.60	0.06	10.05		197.503	76
456	121.44	0.05	9.21		195.011	76
457	121.50	0.05	6.82		193.642	76
458	121.51	0.7	7.04		191.646	76
459	121.48	1.64	8.49		189.369	76
460	121.39	2.13	8.73		186.949	76
461	121.22	2.21	8.55		184.628	76
462	121.30	2.03	8.41		182.214	76
463	121.40	1.75	8.62		179.883	76
464	121.32	1.46	8.27		177.696	76
465	121.34	1.23	7.68		175.586	76
466	121.38	1.1	7.32		173.567	76
467	121.38	0.99	6.54		171.533	76
468	121.27	0.88	5.84		169.618	76
469	121.43	0.79	5.04		167.679	76
470	121.31	0.7	4.32		165.873	76
471	121.37	0.63	3.74		164.201	76
472	121.44	0.56	3.24		162.395	76
473	121.49	0.5	2.84		160.653	76
474	121.51	0.45	2.52		159.027	76
475	121.55	0.42	2.28		157.47	76
476	121.45	0.39	2.1		155.958	76
477	121.55	0.37	1.95		154.492	76
478	121.36	0.37	1.89		152.973	76
479	121.50	0.37	1.85		151.632	76
480	121.63	0.38	1.86		150.186	76
481	121.60	0.39	1.88		148.842	76
482	121.40	0.4	1.89		147.565	76
483	121.58	0.41	1.93		146.299	76

484	121.61	0.41	1.93		145.22	76
485	121.45	0.42	1.95		144.039	76
486	121.52	0.43	1.98		143.03	76
487	121.76	0.43	2.01		141.912	76
488	121.65	0.43	2.01		140.999	76
489	121.65	0.42	1.97		139.918	76
490	121.65	0.42	1.97		139.088	76
491	121.60	0.42	1.97		138.078	76
492	121.70	0.42	1.97		137.355	76
493	121.80	0.42	1.98		136.481	76
494	121.69	0.41	1.95		135.557	76
495	121.68	0.42	1.97		134.775	76
496	121.79	0.41	1.95		133.812	76
497	121.85	0.41	1.96		132.976	76
498	121.78	0.41	1.93		132.421	76
499	121.71	0.4	1.93		131.69	76
500	121.82	0.4	1.94		131.092	76
501	121.76	0.41	1.95		130.599	76
502	121.71	0.4	1.94		129.836	76
503	121.82	0.4	1.93		129.259	76
504	121.90	0.4	1.92		128.826	76
505	121.97	0.38	1.86		127.936	76
506	121.88	0.39	1.91		137.224	76
507	121.44	1.53	8.24		159.187	76
508	120.97	1.68	5.98		170.982	76
509	120.21	2.92	8.44		180.425	76
510	119.92	3.5	10.57		188.744	76
511	119.47	3.32	10.65		195.92	76
512	118.92	3.05	10.31		201.663	76
513	118.47	3.08	10.24		206.102	76
514	117.95	3.1	10.22		209.48	76
515	117.43	3.03	10.42		213.026	76
516	116.99	3	10.33		216.064	76
517	116.46	2.77	10.56		219.983	76
518	115.94	2.67	11.29		224.735	76
519	115.36	1.9	12.56		230.519	76
520	114.60	1.16	13.56		236.307	76
521	113.98	0.58	14.41		242.134	76
522	113.21	0.22	15		246.565	76
523	112.30	0.11	15.74		250.435	76
524	111.63	0.11	16.06		254.062	76
525	110.50	0.11	16.06		256.791	76

526	110.00	0.11	16.65		257.587	76
527	108.97	0.09	16.69		258.374	76
528	108.22	0.09	15.29		258.316	76
529	107.23	0.1	15.64		260.539	76
530	106.44	0.1	16.63		261.371	76
531	105.69	0.08	15.99		261.753	76
532	104.74	0.06	14.74		259.111	76
533	103.88	0.09	16.08		260.131	76
534	102.94	0.09	16.37		262.054	76
535	101.99	0.09	16.4		262.25	76
536	101.06	0.08	15.52		265.342	76
537	100.45	0.07	15.8		265.77	76
538	99.58	0.07	15.63		263.238	76
539	98.84	0.05	14.59		258.866	76
540	98.14	0.07	14.68		261.367	76
541	97.11	0.07	15.82		265.541	76
542	96.53	0.06	15.37		267.671	76
543	95.71	0.05	15.03		268.567	76
544	94.74	0.05	14.72		269.056	76
545	93.98	0.05	14.85		270.491	76
546	93.44	0.05	14.89		271.509	76
547	92.52	0.05	15.03		272.36	76
548	91.77	0.04	14.77		273.287	76
549	90.76	0.05	14.94		274.609	76
550	90.39	0.04	14.81		259.529	76
551	90.00	0.17	13.95		240.209	76
552	89.71	0.25	13.78		229.778	76
553	89.67	1.68	14.56		222.718	76
554	89.39	1.31	14.32		215.378	76
555	89.43	0.16	8.79		209.422	76
556	89.05	0.06	7.24		204.864	76
557	89.18	0.08	5.71		201.312	76
558	89.18	0.08	4.93		198.15	76
559	89.13	0.07	4.31		196.709	76
560	89.17	0.06	2.88		195.357	76
561	89.12	0.2	3.35		193.262	76
562	89.09	0.4	4.42		191.035	76
563	89.13	0.59	5.17		188.585	76
564	89.12	0.68	5.43		186.085	76
565	89.18	0.74	5.63		183.525	76
566	89.29	0.78	5.74		181.069	76
567	89.25	0.8	5.83		178.736	76

568	89.26	0.81	5.82		176.528	76
569	89.24	0.83	5.78		174.323	76
570	89.04	0.87	5.56		172.258	76
571	89.28	0.88	5.24		170.171	76
572	89.12	0.89	4.98		168.178	76
573	89.26	0.88	4.74		166.254	76
574	89.15	0.9	4.67		164.394	76
575	89.32	0.9	4.56		162.64	76
576	89.32	0.88	4.44		160.778	76
577	89.26	0.9	4.48		159.194	76
578	89.21	0.9	4.48		157.559	76
579	89.22	0.91	4.49		156.045	76
580	89.15	0.91	4.53		154.592	76
581	89.28	0.92	4.56		153.183	76
582	89.26	0.91	4.54		151.784	75
583	89.23	0.9	4.54		150.448	75
584	89.47	0.89	4.51		149.109	75
585	89.35	0.89	4.52		147.741	75
586	89.33	0.88	4.51		146.472	75
587	89.33	0.86	4.47		145.361	75
588	89.31	0.85	4.45		144.147	75
589	89.44	0.84	4.44		142.932	75
590	89.40	0.83	4.43		141.835	76
591	89.33	0.8	4.35		140.832	76
592	89.31	0.8	4.41		139.75	76
593	89.40	0.78	4.35		138.745	76
594	89.52	0.78	4.37		137.917	76
595	89.41	0.76	4.35		136.905	76
596	89.59	0.76	4.39		136.128	76
597	89.33	0.75	4.4		135.363	76
598	89.47	0.74	4.38		134.499	76
599	89.43	0.73	4.37		133.808	76
600	89.48	0.72	4.35		132.817	76
601	89.43	0.69	4.25		132.09	76
602	89.43	0.69	4.27		131.345	76
603	89.49	0.67	4.19		134.591	76
604	89.05	1.3	9.14		159.517	76
605	88.46	1.85	7.2		172.223	76
606	88.29	2.71	9.49		181.504	76
607	87.72	2.8	11.34		189.948	76
608	87.11	2.25	11.6		199.72	75
609	86.56	1.78	11.83		207.706	75

610	86.14	1.19	12.34		214.427	76
611	85.72	0.73	12.88		220.367	76
612	85.02	0.06	14.42		227.556	75
613	84.25	0.05	14.41		232.588	76
614	83.59	0.05	14.64		237.242	76
615	82.84	0.05	15.36		242.264	76
616	82.15	0.05	15.54		245.951	76
617	81.41	0.06	15.49		248.734	76
618	80.64	0.07	15.86		253.033	76
619	79.70	0.07	16.39		255.773	76
620	78.95	0.06	16.04		256.747	76
621	78.04	0.06	15.65		257.243	76
622	77.46	0.06	15.5		258.247	76
623	76.65	0.06	15.69		259.853	76
624	75.80	0.06	15.75		261.061	76
625	74.84	0.06	16.61		258.406	76
626	74.42	0.06	16.64		257.949	76
627	73.43	0.06	16.3		259.226	76
628	72.82	0.05	15.41		260.153	76
629	72.07	0.05	15.87		260.135	76
630	71.40	0.05	15.98		260.508	76
631	70.59	0.05	15.83		262.324	76
632	69.74	0.04	14.29		262.045	76
633	69.21	0.03	13.62		263.196	76
634	68.47	0.04	14.9		261.892	76
635	67.79	0.04	15.6		262.566	76
636	66.91	0.04	15.43		264.393	76
637	66.17	0.03	13.58		264.294	76
638	65.55	0.04	15.76		264.566	75
639	64.64	0.04	15.69		264.209	76
640	64.20	0.04	15.72		264.124	76
641	63.37	0.04	16.19		264.212	76
642	62.84	0.04	15.75		265.545	76
643	62.07	0.04	15.67		264.839	75
644	61.28	0.04	15.78		265.995	76
645	60.77	0.03	15.59		265.472	76
646	60.22	0.04	15.27		254.157	76
647	59.80	1.15	16.71		236.551	76
648	59.36	2.18	16.48		227.502	76
649	59.13	5.2	14.49		221.277	76
650	58.99	5.2	15.37		212.924	76
651	58.88	0.5	13.36		206.802	76

652	58.71	0.18	11.75		202.272	76
653	58.49	0.07	10.16		198.815	76
654	58.61	0.07	9.42		195.73	76
655	58.50	0.04	8.31		193.899	76
656	58.19	0.23	5.96		192.244	76
657	58.33	1.07	7.53		190.063	76
658	58.32	1.77	8.23		187.717	76
659	58.27	2.01	8.33		185.178	76
660	58.25	1.94	8.39		182.825	76
661	58.27	1.75	8.4		180.318	75
662	58.26	1.54	7.84		178.124	76
663	58.18	1.31	7.69		176.068	76
664	58.19	1.16	7.26		173.935	76
665	58.26	1.06	6.82		171.89	76
666	58.29	0.95	6.31		169.872	76
667	58.25	0.85	5.86		167.923	76
668	58.20	0.78	5.14		165.996	76
669	58.28	0.72	4.51		164.181	76
670	58.28	0.67	4.05		162.42	76
671	58.25	0.63	3.62		160.753	76
672	58.36	0.57	3.21		159.084	76
673	58.27	0.52	2.87		157.475	75
674	58.41	0.49	2.67		156.028	76
675	58.27	0.45	2.4		154.524	76
676	58.38	0.41	2.19		153.029	76
677	58.21	0.39	2.05		151.663	76
678	58.35	0.37	1.93		150.184	76
679	58.37	0.34	1.78		148.828	76
680	58.54	0.32	1.67		147.558	75
681	58.42	0.31	1.6		146.284	76
682	58.50	0.3	1.55		145.146	76
683	58.34	0.29	1.5		143.956	76
684	58.39	0.29	1.46		142.859	76
685	58.53	0.29	1.47		141.76	76
686	58.45	0.29	1.44		140.702	76
687	58.50	0.29	1.43		139.661	75
688	58.47	0.29	1.44		138.635	75
689	58.25	0.29	1.44		137.849	75
690	58.24	0.29	1.46		137.113	75
691	58.51	0.3	1.49		136.13	75
692	58.68	0.31	1.51		135.324	75
693	58.39	0.3	1.49		134.403	76

694	58.96	0.31	1.5		133.547	76
695	58.58	0.32	1.56		132.949	76
696	58.58	0.32	1.56		132.237	76
697	58.51	0.33	1.58		131.49	75
698	58.71	0.32	1.58		130.713	76
699	58.72	0.33	1.62		129.927	76
700	58.62	0.34	1.66		128.983	76
701	58.64	0.35	1.7		128.108	76
702	58.73	0.35	1.73		127.482	75
703	58.57	0.36	1.74		126.924	75
704	58.57	0.36	1.75		144.644	76
705	58.05	1.63	9.09		164.928	76
706	57.60	1.87	7.9		176.731	75
707	57.10	2.57	9.99		187.82	75
708	56.54	1.99	13.5		201.89	76
709	55.95	1.04	14.08		215.607	76
710	55.24	0.33	14.7		225.324	75
711	54.74	0.1	14.85		232.745	75
712	54.25	0.09	14.98		237.901	75
713	53.72	0.1	15.25		242.228	75
714	52.98	0.07	15.3		245.309	75
715	52.43	0.07	15.56		248.989	75
716	51.65	0.07	15.9		251.979	75
717	50.74	0.07	16.05		254.197	75
718	50.17	0.07	15.85		255.031	75
719	49.67	0.06	15.79		256.009	75
720	49.01	0.06	15.96		254.485	75
721	48.19	0.07	16.1		254.236	75
722	47.48	0.07	16.04		256.712	75
723	47.03	0.06	15.71		257.847	75
724	46.34	0.06	15.51		259.762	75
725	45.48	0.06	15.45		260.245	75
726	44.72	0.06	15.75		260.056	75
727	43.99	0.07	15.8		259.113	75
728	43.17	0.07	15.76		261.735	75
729	42.45	0.05	14.48		258.156	75
730	41.80	0.07	15.67		258.166	75
731	41.34	0.05	14.89		263.505	75
732	40.58	0.05	14.74		266.086	75
733	39.70	0.05	14.92		267.759	75
734	39.19	0.05	15.03		269.287	75
735	38.51	0.05	12.8		267.832	75

736	37.69	0.04	14.6		269.456	75
737	37.11	0.04	14.36		270.304	75
738	36.40	0.04	14.26		270.79	76
739	35.70	0.04	14.23		271.067	75
740	35.12	0.04	14.24		271.867	75
741	34.51	0.04	14.33		272.331	75
742	33.85	0.04	14.33		272.885	75
743	33.47	0.05	11.36		251.897	75
744	33.08	0.01	11.37		235.126	75
745	32.88	0.04	10.95		225.371	75
746	32.60	0.29	13.29		217.977	75
747	32.42	0.18	11.62		212.192	75
748	32.25	0.11	10.33		207.741	76
749	32.25	0.05	9.22		203.726	75
750	32.11	0.04	8.16		200.405	75
751	32.13	0.05	7.41		197.233	75
752	31.96	0.06	6.44		195.961	75
753	31.86	0.21	4.81		194.186	75
754	31.86	0.65	6.07		192.13	75
755	31.88	1	6.99		189.666	75
756	31.91	1.07	6.94		187.088	75
757	31.78	1.11	6.59		184.544	75
758	31.96	1	6		182.157	75
759	31.82	0.86	5.59		179.848	75
760	31.88	0.74	4.98		177.502	74
761	32.01	0.62	4.4		175.254	74
762	31.94	0.53	3.84		173.119	74
763	31.92	0.46	3.37		171.098	74
764	31.95	0.4	2.96		169.147	74
765	31.99	0.34	2.58		167.2	74
766	32.03	0.29	2.25		165.306	74
767	31.93	0.25	1.98		163.487	74
768	31.99	0.22	1.75		161.666	74
769	32.16	0.19	1.56		159.922	74
770	32.18	0.17	1.4		158.248	74
771	32.18	0.15	1.26		156.6	74
772	32.16	0.14	1.14		155.088	74
773	32.01	0.12	1.03		153.561	74
774	32.17	0.11	0.94		152.211	74
775	32.10	0.1	0.85		150.74	74
776	32.05	0.1	0.79		149.363	74
777	32.19	0.09	0.72		147.905	74

778	32.21	0.08	0.67		146.555	74
779	32.31	0.08	0.62		145.306	74
780	32.19	0.07	0.58		144.127	74
781	32.44	0.07	0.56		142.958	74
782	32.33	0.07	0.53		141.856	74
783	32.32	0.06	0.51		140.799	74
784	32.38	0.06	0.5		139.685	73
785	32.56	0.06	0.48		138.869	74
786	32.53	0.06	0.47		137.917	74
787	32.40	0.06	0.46		137.018	73
788	32.41	0.06	0.45		136.163	73
789	32.29	0.06	0.45		135.56	74
790	32.55	0.06	0.44		134.626	73
791	32.47	0.06	0.43		133.595	73
792	32.56	0.06	0.43		132.969	73
793	32.49	0.07	0.43		132.362	73
794	32.58	0.07	0.44		131.565	74
795	32.61	0.07	0.44		130.851	73
796	32.58	0.07	0.44		130.111	73
797	32.49	2.15	9.15		155.504	73
798	31.93	1.74	6.62		169.145	73
799	31.72	2.61	7.59		178.707	73
800	31.00	3.49	10.03		187.807	73
801	30.66	2.74	10.88		197.625	73
802	30.21	2.08	10.93		206.042	73
803	29.75	1.86	11.13		212.949	73
804	29.30	1.51	11.43		217.964	73
805	28.68	1.57	11.65		221.804	73
806	28.29	1.45	12.08		226.258	73
807	27.88	1.05	12.85		230.811	73
808	27.21	0.66	13.27		234.807	73
809	26.58	0.27	14.02		239.449	73
810	26.13	0.24	14.3		242.97	73
811	25.58	0.21	14.42		245.084	73
812	25.31	0.16	14.53		246.054	73
813	24.66	0.16	14.38		246.723	73
814	23.98	0.13	14.43		249.785	73
815	23.41	0.12	14.6		252.329	73
816	22.74	0.1	14.37		253.736	73
817	22.18	0.07	15.13		255.855	73
818	21.63	0.07	15.19		257.956	73
819	21.04	0.07	15.28		260.015	73

820	20.14	0.06	15.43		262.403	73
821	19.48	0.06	15.61		263.423	73
822	19.10	0.07	15.61		264.659	73
823	18.34	0.06	15.53		265.156	73
824	17.79	0.06	14.97		266.375	73
825	17.19	0.06	15.09		266.642	73
826	16.48	0.05	15.14		267.564	73
827	15.89	0.05	15.2		268.823	73
828	15.30	0.05	15.21		269.634	73
829	14.62	0.05	15.09		270.444	73
830	13.98	0.05	15.09		271.362	73
831	13.24	0.05	15.23		272.473	73
832	12.67	0.05	15.36		273.261	73
833	12.25	0.04	13.9		272.133	73
834	11.42	0.05	14.86		273.289	73
835	10.79	0.05	14.83		274.192	73
836	10.45	0.05	14.81		274.849	73
837	10.02	0.05	14.7		263.321	73
838	9.62	0.03	12.32		243.537	73
839	9.37	0.06	12.66		233.027	73
840	9.04	1.64	13.56		226.42	73
841	8.78	2.13	14.47		218.552	73
842	8.75	0.28	10.49		211.88	73
843	8.76	0.05	9.44		207.108	73
844	8.71	0.03	8.28		203.235	73
845	8.56	0.03	7.53		199.91	73
846	8.54	0.04	6.78		198.009	73
847	8.41	0.07	4.59		196.564	73
848	8.44	0.49	5.64		194.415	73
849	8.40	0.93	6.88		192.071	73
850	8.29	1.18	7.4		189.62	73
851	8.36	1.27	7.51		187.007	73
852	8.31	1.28	7.52		184.459	73
853	8.48	1.2	7.16		182.035	73
854	8.45	1.12	6.79		179.693	73
855	8.39	1.03	6.26		177.488	73
856	8.28	0.95	5.73		175.266	73
857	8.24	0.85	5.19		173.083	73
858	8.33	0.77	4.72		170.982	73
859	8.36	0.7	4.38		168.987	73
860	8.38	0.65	4.03		167.052	73
861	8.42	0.59	3.65		165.218	73

862	8.57	0.54	3.37		163.399	73
863	8.53	0.49	3.08		161.65	73
864	8.38	0.44	2.83		159.981	73
865	8.61	0.41	2.61		158.324	73
866	8.58	0.39	2.41		156.784	73
867	8.53	0.36	2.18		155.258	73
868	8.45	0.34	2.03		153.776	73
869	8.67	0.31	1.84		152.312	73
870	8.47	0.29	1.69		150.87	73
871	8.74	0.27	1.56		149.39	73
872	8.63	0.26	1.44		148.056	73
873	8.69	0.24	1.36		146.747	73
874	8.63	0.23	1.25		145.464	73
875	8.74	0.22	1.16		144.198	74
876	8.76	0.21	1.1		143.041	74
877	8.65	0.2	1.04		141.86	74
878	8.61	0.2	1		140.749	74
879	8.73	0.2	0.97		139.874	74
880	8.69	0.2	0.95		138.847	74
881	8.82	0.2	0.93		137.79	74
882	8.70	0.19	0.91		137.108	74
883	8.86	0.19	0.88		136.16	74
884	8.88	0.19	0.87		135.494	74
885	8.79	0.19	0.85		134.65	74
886	8.80	0.19	0.85		133.767	74
887	8.97	0.19	0.84		132.862	74
888	8.88	0.19	0.82		132.073	74
889	8.84	0.19	0.81		131.287	74
890	8.79	0.19	0.81		145.964	74
891	8.49	2.1	8.41		164.615	74
892	8.08	2.59	8.51		178.619	74
893	7.44	3.2	11.04		190.506	74
894	6.98	2.7	12.14		202.975	74
895	6.43	2.1	12.28		212.652	74
896	5.95	2.17	11.91		219.325	73
897	5.43	1.7	12.28		225.298	73
898	5.04	0.87	13.02		230.252	73
899	4.52	0.64	13.29		234.768	73
900	3.95	0.19	14.15		239.282	73
901	3.52	0.16	14.66		243.783	73
902	3.06	0.12	14.62		246.894	73
903	2.49	0.13	14.73		249.568	73

904	2.18	0.12	14.83		252.038	73
905	1.64	0.11	14.92		253.941	73
906	1.03	0.12	14.81		255.706	73
907	0.50	0.1	14.76		257.341	73
908	-0.21	0.1	14.6		258.777	73

OMNI-Test Laboratories, Inc.

ASTM E2618 Wood Heater Run Sheets

Client: Central Boiler Project Number: 0117WB Run Number: 2
Model: Edge 760 Tracking Number: 2383 Date: 8/8/19
Test Crew: D Davis
OMNI Equipment ID numbers:

Wood Heater Supplemental Data

Start Time: 1631 Booth #: E3
Stop Time: Time LAPSE 15:08:03

~~Stack Gas Leak Check:~~
Initial: good Final: Good

~~Sample Train Leak Check:~~
A: .002 @ 9.75 "Hg
B: .003 @ 8.43 "Hg

Calibrations: Span Gas CO_2: 17.08 CO: 4.29

	Pre Test		Post Test	
	Zero	Span	Zero	Span
Time	1616	1616	07:50	07:50
CO_2	-0.00	17.01	0.05	16.99
CO	-0.00	4.29	-0.00	4.28

Air Velocity (ft/min): Initial: <50 Final: <50
Scale Audit (lbs): Initial: 10.0 Final: 10.0
Pitot Tube Leak Test: Initial: good Final: Good
Stack Diameter (in): 8"
Induced Draft: 0.0
% Smoke Capture: 100%
Flue Pipe Cleaned Prior to First Test in Series:
Date: 8/7/19 Initials: BC

	Initial	Middle	Ending
P_b (in/Hg)	29.97		29.97
RH (%)	48 %		47%
Ambient (°F)	75		73

Background Filter Volume: 213.068

Tunnel Traverse		
Microtector Reading	dP (in H_2O)	T(°F)
0.1	0.010	111
0.2	0.014	112
0.3	0.016	113
0.4	0.015	111
0.5	0.016	112
0.6	0.016	112
0.1	0.016	113
0.2	0.017	112
0.3	0.015	111
0.4	0.016	111
0.5	0.012	113
0.6	0.010	113
Center:		
	0.017	113

Tunnel Static Pressure (in H_2O):	
Beginning of Test	End of Test
-.173	-0.174

Technician Signature: [signature] Date: 10/23/19

OMNI-Test Laboratories, Inc.

ASTM E2618 Wood Heater Run Sheets

Client: Central Boiler Project Number: 0117WB Run Number: 2
Model: Edge 760 Tracking Number: 2383 Date: 8/8/19
Test Crew: B Davis
OMNI Equipment ID numbers:

Wood Heater Run Notes

Air Control Settings

Primary:

Automatic
Demand temperature = 165-185

Secondary: fixed

Tertiary/Pilot: N/A

Fan: Auto

Preburn Notes

Time	Notes
Ø	Burned on High until top end of coal bed range then turned down to CAT III heat draw. Approx 170 lbs of preburn fuel consumed.

Test Notes

Sketch test fuel configuration:

See photo

Start up procedures & Timeline:

Bypass: Not used
Fuel loaded by: 65 seconds
Door closed at: 70 seconds
Primary air: Automatic

Notes:

Time	Notes
60	Changed front filter on train A
752	Changed front filters Due to Loading upon cycling (changed after cycle)
908	Test END

Technician Signature: B D Date: 10/20/19

Run 3

Hydronic Heating Appliances - Test Method ASTM 2618
Results

Manufacturer:	Central Boiler
Model:	Edge 760
Tracking No.:	2383
Project No.:	0117WB000E
Run:	3
Test Date:	August 13, 2019

Burn Rate	**3.56**	**kg/hr dry**
Average Tunnel Temperature	92	degrees F
Average Gas Velocity in Dilution Tunnel - vs	7.5	feet/second
Average Gas Flow Rate in Dilution Tunnel - Qsd	19953	dscf/hour
Average Delta p	0.015	inches H20
Average Delta H	1.32	inches H20
Total Time of Test	1687	minutes

PARTICULATE EMISSIONS RESULTS

First Hour:	**-0.01**	g/hr
	0.00	g/kg
	0.00	lb/mmBTU output
Complete Run:	**2.20**	g/hr
	0.62	g/kg
	0.09	lb/mmBTU output

	SAMPLE TRAIN 1		SAMPLE TRAIN 2		AMBIENT SAMPLE TRAIN	
Total Sample Volume - Vm	273.57	cubic feet	274.28	cubic feet	379.13	cubic feet
Average Gas Meter Temperature	95	degrees F	95	degrees F	82	degrees F
Total Sample Volume (Standard Conditions) - Vmstd	264.6	dscf	260.4	dscf	372.0	dscf
Total Particulates - mn	28.7	mg	29.3	mg	0.1	mg
Particulate Concentration (dry-standard)	0.00011	grams/dscf	0.00011	grams/dscf	0.000000	grams/dscf
Particulate Emissions	60.71	grams	62.97	grams		
Difference from Average	1.13	grams	1.13	grams		

Results Are Acceptable

	AVERAGE	
Total Sample Volume - Vm	273.92	cubic feet
Average Gas Meter Temperature	95	degrees F
Total Sample Volume (Standard Conditions) - Vmstd	262.5	dscf
Particulate Concentration (dry-standard)	0.00011	grams/dscf
Particulate Emissions	61.84	grams
7.5% of the average particulate emissions	4.64	grams

ADDITIONAL ACCEPTANCE CRITERIA

Boiler Water Return Temperature >120 °F	**Acceptable**
Proportional Rate Variation >80%	**Acceptable**
90% of PR Values between 90-110%	**Acceptable**

SAMPLE TRAIN 1 - FIRST HOUR

Total Sample Volume - Vm	9.72	cubic feet
Average Gas Meter Temperature	92	degrees F
Total Sample Volume (Standard Conditions) - Vmstd	9.44	dscf
Total Particulates - mn	0	mg
Particulate Concentration (dry-standard)	0.00000	grams/dscf
Particulate Emissions	-0.01	grams
Burn Rate	7.51	(dry kg/hr)
Heat Output Rate	53958	BTU/hr

Hydronic Heating Appliances - Test Method ASTM 2618
Results

Manufacturer:	Central Boiler	Equipment Numbers:	
Model:	Edge 760		
Tracking No.:	2383		
Project No.:	0117WB000E		
Run #:	3		
Date:	8/13/19		

TRAIN 1 (First Hour emissions)

Sample Component	Reagent	Filter, Probe or Dish #	Weights		
			Final, mg	Tare, mg	Particulate, mg
B. Front filter catch	Filter	D872	118.7	118.7	0.0
C. Rear filter catch	Filter				0.0
D. Probe catch*	Probe				0.0
E. Filter seals catch*	Seals				0.0

Sub-Total	Total Particulate, mg:	0.0

TRAIN 1 (Post First Hour Change-out)

Sample Component	Reagent	Filter, Probe or Dish #	Weights		
			Final, mg	Tare, mg	Particulate, mg
B. Front filter catch	Filter	D873	130.1	118.0	12.1
C. Rear filter catch	Filter	D874, D878	252.5	238.5	14.0
D. Probe catch*	Probe	17	114562.7	114561.2	1.5
E. Filter seals catch*	Seals	R853	3623.0	3621.9	1.1

Sub-Total	Total Particulate, mg:	28.7
Train 1 Aggregate	Total Particulate, mg:	28.7

TRAIN 2

Sample Component	Reagent	Filter, Probe or Dish #	Weights		
			Final, mg	Tare, mg	Particulate, mg
A. Front filter catch	Filter	D875	131.7	118.0	13.7
B. Rear filter catch	Filter	D876, D879	251.4	238.3	13.1
C. Probe catch*	Probe	18	114403.2	114401.8	1.4
D. Filter seals catch*	Seals	R854	3351.7	3350.6	1.1

Total Particulate, mg:	29.3

AMBIENT

Sample Component	Reagent	Filter # or Probe #	Weights		
			Final, mg	Tare, mg	Particulate, mg
A. Front filter catch*	Filter	D877	119.1	119.0	0.1

Total Particulate, mg:	0.1

*Particulate catch that results in a negative number, is assumed to be zero for probes and seals, negative numbers for filters are assumed to be part of the seal weight.

Component	Equations:
A. Front filter catch	Final (mg) - Tare (mg) = Particulate, mg
B. Rear filter catch	Final (mg) - Tare (mg) = Particulate, mg
C. Probe catch	Final (mg) - Tare (mg) = Particulate, mg

Hydronic Heating Appliances - Test Method ASTM 2618
Fuel Moisture

Manufacturer:	Central Boiler
Model:	Edge 760
Tracking No.:	2383
Project No.:	0117WB000E
Technician:	B. Davis
Run #:	3
Test Date:	August 13, 2019

Wet Weight (lb)	% Moisture				
11.7	23.8	22	22.2	18	21.1
10.2	20.2	21	22.1	19.4	22
10	18.4	19.5	19.2	18.2	19.7
12.4	20.1	18.8	19.8	19.4	18.6
10.8	26.8	26.6	27.5	26.9	28.6
10.5	18.3	19.8	18.6	20	18.6
9.6	22.1	22.4	19.4	22.3	28.8
11.8	24.3	25.4	19.5	23.8	28.6
13.7	22.5	19.7	22.8	18.5	18.7
12.9	26.7	26.8	25.7	25.9	22.4
10.8	18.8	19.2	18.6	19.3	19.1
10.1	24.4	21.6	26	22.3	21.2
12.8	19.6	18.7	18.3	19.9	20.1
8.9	22.6	23.8	24.2	24.5	18.7
12.2	25.2	26.8	25.2	22.4	25.6
11.8	19.5	22.8	19.0	23.1	18.9
12.2	22.1	21.9	24.8	24.7	21.4
9.0	21.4	20.6	19.4	20.3	20.0
12.1	22.4	23.1	23.1	20.9	24.2
12.9	18.6	18.7	19.7	19.6	18.8
11.1	20.0	19.3	19.3	18.6	19.2
10.3	22.4	23.1	23.1	20.9	24.2
10.6	22.6	23.8	24.2	24.5	18.7
10.6	24.3	25.4	19.5	23.8	28.6

Total Weight of Load (lb):	269
Total Moisture of Load (%):	21.8

Equipment Numbers:

Hydronic Heating Appliances - Test Method ASTM 2618
Test Data

Run: 3

Manufacturer: Central Boiler
Model: Edge 760
Tracking No.: 2383
Project No.: 0117WB000E
Test Date: August 13, 2019
Technician: B. Davis
Beginning Clock Time: 16:55
Recording Interval: 1 min.
Total Sampling Time: 1687 min.

Velocity Traverse Data

	Pt.1	Pt.2	Pt.3	Pt.4	Pt.5	Pt.6	Pt.7	Pt.8	Pt.9	Pt.10	Pt.11	Pt.12	Center	
Initial dP	0.008	0.014	0.015	0.017	0.015	0.016	0.014	0.016	0.015	0.016	0.015	0.012	0.017	"H2O
Initial Temp.	90	90	90	90	90	90	90	90	90	90	90	90	90	oF

Air Velocity: Initial: <50 Final: <50 V_{strav} 8.08 ft/sec
Scale Audit: Pre: 10.0 Post: 10.0 Induced Draft: 0 V_{scent} 8.80 ft/sec
Pitot Tube Leak Test: Pre: 0 Post: 0 % Smoke Capture: 100 F_p 0.917
Flue Pipe Cleaned Prior to First Test in Series: Date:

PM Control Module: 371, 372
Dilution Tunnel MW(dry): 29.00 lb/lb-mole
Dilution Tunnel MW(wet): 28.78 lb/lb-mole
Dilution Tunnel H2O: 2.00 percent
Dilution Tunnel Static: -0.164 "H2O
Pitot Tube Cp: 0.99

	(1)	(2)	(amb)
Meter Box Y Factor:	1.009	0.99	1.001

Barometric Pressure:	Begin	Middle	End	Average
	30.04	30.07	30.14	30.08 "Hg

Tunnel Velocity: 7.50 ft/sec.
Intial Tunnel Flow: 359.4 scfm
Average Tunnel Flow: 332.5 scfm
Tunnel Area: 0.785 ft2
Post-Test Leak Check (1): 0.000 cfm @ 11 in. Hg
Post-Test Leak Check (2): 0.000 cfm @ 9 in. Hg
Fuel Moisture (dry basis %): 21.8
Total Particulate (1): 28.7
Total Particulate (2): 29.3

Elapsed Time	Gas Meter Cubic Feet (1)	Gas Meter Cubic Feet (2)	Gas Meter Cubic Feet (amb)	Sample Rate, cfm (1)	Sample Rate, cfm (2)	Orifice dH (1)	Orifice dH (2)	Orifice dH (amb)	Meter oF (1)	Meter oF (2)	Meter oF (amb)	Meter Vac. In. Hg. (1)	Meter Vac. In. Hg. (2)	Dilution Tunnel Temp.	Dilution Tunnel dP	Pro. Rate (%) (1)	Pro. Rate (%) (2)	Fuel Weight, lb: Scale Reading	Fuel Weight, lb: Weight Change	Flow, gpm: Load Side Liquid Flow Rate	Flow, gpm: Boiler Side Liquid Flow Rate (optional)	Temperature, oF: Thermopile ΔT	Temperature, oF: Boiler to Heat Exch. Temp.	Temperature, oF: Heat Exch to Boiler Temp.	Temperature, oF: Inlet Load Temp.	Temperature, oF: Outlet Load Temp.	Temperature, oF: Stack	Temperature, oF: Filter (1)	Temperature, oF: Filter (2)	Temperature, oF: Ambient	Stack: Draft In. H2O	Specific Heat of Inlet Water (BTU/lb-°F)	Mass Flow Rate of Inlet Water (lb/min)	Heat Output, Btu
0	0.000	0.000	0			1.05	0.99	0.26	89	89	84	1.94	1.4	108	0.014			268.9		1.07	15.55	94.50	167.06	160.76	72.08	166.58	233	84	85	84				
1	0.146	0.151		0.15	0.15	1.33	1.10	0.26	89	89	84	1.99	1.5	102	0.015	91	93	267.9	1.00	1.09	15.36	96.03	168.55	162.32	72.18	168.21	217	85	85	84		1.001	9.060	871
2	0.307	0.315		0.16	0.16	1.33	1.10	0.26	89	89	84	2	1.5	99	0.016	97	98	266.7	1.20	1.09	15.47	96.61	169.34	163.01	72.34	168.95	206	85	85	84		1.001	9.055	876
3	0.468	0.478		0.16	0.16	1.33	1.07	0.26	89	89	84	2.01	1.5	105	0.014	104	105	265.3	1.35	1.13	15.35	97.12	169.76	163.47	72.40	169.52	220	86	85	84		1.001	9.382	912
4	0.628	0.640		0.16	0.16	1.31	1.07	0.26	89	89	84	2.02	1.5	115	0.015	101	101	264.0	1.36	1.19	15.40	96.76	169.40	163.18	72.41	169.17	243	88	85	84		1.001	9.870	956
5	0.788	0.802		0.16	0.16	1.31	1.07	0.26	89	89	84	2.02	1.5	120	0.014	105	105	262.6	1.34	1.16	15.44	96.70	169.45	163.21	72.43	169.12	253	89	85	84		1.001	9.616	931
6	0.948	0.963		0.16	0.16	1.31	1.06	0.26	89	89	84	2.01	1.5	117	0.014	104	104	262.0	0.65	1.18	15.49	97.46	170.20	163.88	72.37	169.83	253	89	85	84		1.001	9.801	956
7	1.107	1.123		0.16	0.16	1.31	1.06	0.26	89	89	84	2.01	1.5	117	0.015	100	100	261.2	0.82	1.07	15.45	98.43	171.19	164.82	72.36	170.79	253	90	85	84		1.001	8.903	877
8	1.267	1.284		0.16	0.16	1.31	1.06	0.26	89	89	84	2.02	1.5	118	0.015	101	101	260.0	1.14	1.13	15.47	99.04	171.79	165.44	72.34	171.38	258	90	85	84		1.001	9.382	930
9	1.426	1.444		0.16	0.16	1.30	1.05	0.26	89	89	84	2	1.5	118	0.016	97	97	259.0	0.98	1.07	15.43	99.71	172.55	166.01	72.34	172.05	257	89	85	84		1.001	8.895	888
10	1.585	1.604		0.16	0.16	1.30	1.05	0.26	89	90	84	2.01	1.5	117	0.016	97	97	258.4	0.68	1.13	15.51	100.57	173.44	166.88	72.34	172.91	258	89	85	84		1.001	9.377	944
11	1.743	1.764		0.16	0.16	1.30	1.05	0.26	90	90	84	2.01	1.5	119	0.015	99	100	257.6	0.76	1.07	15.41	101.35	174.10	167.54	72.33	173.68	260	89	85	84		1.001	8.892	902
12	1.901	1.924		0.16	0.16	1.30	1.04	0.26	90	90	84	2	1.5	118	0.015	99	100	256.7	0.93	1.19	15.39	102.22	175.01	168.42	72.32	174.54	259	89	85	84		1.001	9.860	1009
13	2.063	2.083		0.16	0.16	1.34	1.05	0.26	90	90	84	2.06	1.5	120	0.016	99	97	255.6	1.09	1.19	15.40	103.06	175.87	169.22	72.35	175.41	262	89	85	84		1.001	9.862	1018
14	2.224	2.243		0.16	0.16	1.35	1.05	0.26	90	90	84	2.04	1.5	119	0.017	95	94	254.9	0.74	1.07	15.40	103.83	176.67	170.28	72.42	176.26	261	89	85	84		1.001	8.892	924
15	2.386	2.402		0.16	0.16	1.35	1.04	0.26	90	90	84	2.06	1.5	120	0.016	99	97	254.4	0.46	1.03	15.54	104.69	177.42	171.10	72.39	177.08	263	89	85	84		1.001	8.573	899
16	2.547	2.561		0.16	0.16	1.34	1.04	0.26	90	90	84	2.06	1.5	120	0.016	98	97	253.1	1.33	1.07	15.44	105.34	178.30	171.86	72.55	177.89	266	90	85	84		1.001	8.891	938
17	2.709	2.721		0.16	0.16	1.34	1.04	0.26	90	90	84	2.05	1.5	120	0.015	102	100	252.4	0.70	0.99	15.38	106.13	179.10	172.63	72.57	178.70	266	89	85	84		1.001	8.241	876
18	2.871	2.880		0.16	0.16	1.34	1.04	0.26	91	91	84	2.04	1.5	120	0.015	102	100	251.8	0.58	1.11	15.39	106.94	179.96	173.47	72.60	179.54	267	89	85	84		1.001	9.215	987
19	3.032	3.039		0.16	0.16	1.34	1.04	0.26	91	91	84	2.05	1.5	120	0.016	98	96	251.0	0.78	1.03	15.46	107.82	180.79	174.27	72.56	180.38	267	89	85	84		1.001	8.565	925
20	3.193	3.199		0.16	0.16	1.34	1.04	0.26	91	91	84	2.04	1.5	121	0.015	101	100	249.8	1.20	1.05	15.41	108.62	181.61	175.06	72.63	181.25	269	89	85	84		1.001	8.733	950
21	3.355	3.357		0.16	0.16	1.34	1.04	0.26	91	91	84	2.03	1.5	113	0.014	105	102	249.4	0.42	1.05	15.45	109.34	182.36	175.70	72.64	181.98	253	88	85	84		1.001	8.728	956
22	3.517	3.517		0.16	0.16	1.34	1.04	0.26	91	91	84	2.02	1.5	102	0.015	100	99	249.1	0.29	1.01	15.38	110.13	183.12	176.71	72.59	182.72	237	86	85	84		1.001	8.407	927
23	3.679	3.677		0.16	0.16	1.34	1.04	0.26	91	91	84	2.02	1.5	97	0.015	100	98	249.0	0.11	1.09	15.42	110.32	183.27	176.71	72.68	183.00	228	87	85	84		1.001	9.053	1000
24	3.842	3.837		0.16	0.16	1.34	1.04	0.26	92	92	84	2.02	1.5	95	0.016	97	95	248.9	0.12	1.05	15.40	110.33	183.26	176.63	72.66	182.99	221	86	85	84		1.001	8.727	964
25	4.004	3.997		0.16	0.16	1.34	1.04	0.26	92	92	84	2.02	1.5	95	0.014	103	101	248.8	0.08	1.01	15.37	110.44	183.33	176.74	72.60	183.05	214	85	85	84		1.001	8.406	929
26	4.167	4.158		0.16	0.16	1.34	1.04	0.26	92	92	84	2.02	1.5	94	0.014	103	102	248.6	0.14	1.01	15.40	110.37	183.36	176.75	72.71	183.08	209	84	85	84		1.001	8.416	930
27	4.330	4.318		0.16	0.16	1.34	1.05	0.26	92	92	84	2.02	1.5	93	0.014	103	101	248.7	-0.05	1.06	15.40	110.34	183.31	176.69	72.71	183.05	204	83	85	84		1.001	8.836	976
28	4.492	4.480		0.16	0.16	1.35	1.06	0.26	92	92	84	2.01	1.5	93	0.014	103	102	248.7	-0.01	1.05	15.43	110.33	183.27	176.68	72.66	182.99	201	83	85	84		1.001	8.727	964
29	4.655	4.641		0.16	0.16	1.34	1.06	0.26	92	92	84	2.01	1.5	93	0.016	97	95	248.7	0.06	1.01	15.38	110.29	183.25	176.68	72.70	182.98	198	83	85	84		1.001	8.408	928
30	4.818	4.803		0.16	0.16	1.34	1.06	0.26	93	93	84	1.99	1.5	92	0.015	100	99	248.6	0.05	1.09	15.42	110.17	183.16	176.73	72.75	182.92	196	84	85	84		1.001	9.057	999
31	4.981	4.965		0.16	0.16	1.34	1.06	0.26	93	93	84	2	1.5	91	0.015	100	99	248.6	0.05	0.97	15.42	110.06	183.08	176.68	72.78	182.84	195	84	85	84		1.001	8.081	890
32	5.144	5.127		0.16	0.16	1.35	1.06	0.26	93	93	84	2.01	1.5	91	0.016	96	95	248.6	-0.06	0.99	15.41	110.15	183.00	176.66	72.62	182.76	194	84	85	84		1.001	8.241	909
33	5.307	5.289		0.16	0.16	1.35	1.06	0.26	93	93	85	2.01	1.5	91	0.014	103	102	248.7	-0.04	1.03	15.45	109.94	182.87	176.50	72.70	182.64	192	85	85	85		1.001	8.567	943
34	5.469	5.451		0.16	0.16	1.34	1.06	0.26	93	93	85	1.99	1.5	91	0.015	99	99	248.7	-0.07	0.99	15.35	109.95	182.80	176.80	72.63	182.58	189	85	85	85		1.001	8.243	907
35	5.632	5.613		0.16	0.16	1.34	1.06	0.26	93	93	84	2.01	1.5	90	0.015	99	98	248.6	0.14	0.89	15.39	109.86	182.70	177.60	72.61	182.47	187	85	85	84		1.001	7.435	818
36	5.796	5.775		0.16	0.16	1.34	1.06	0.26	93	93	84	2.01	1.5	90	0.013	107	106	248.7	-0.06	0.89	15.49	109.61	182.56	177.18	72.68	182.29	185	85	85	84		1.001	7.435	816
37	5.959	5.937		0.16	0.16	1.34	1.06	0.26	94	94	85	2	1.5	90	0.016	96	95	248.6	0.02	0.92	15.47	109.39	182.45	177.05	72.81	182.19	182	85	85	85		1.001	7.652	838
38	6.122	6.099		0.16	0.16	1.34	1.06	0.26	94	94	84	2	1.5	90	0.014	103	102	248.6	0.06	0.89	15.50	109.22	182.29	176.88	72.83	182.04	180	85	85	84		1.001	7.436	813
39	6.286	6.261		0.16	0.16	1.34	1.06	0.26	94	94	84	2.02	1.5	90	0.016	97	95	248.5	0.04	0.89	15.38	109.05	182.17	176.76	72.85	181.90	178	85	85	84		1.001	7.437	812
40	6.449	6.423		0.16	0.16	1.34	1.06	0.26	94	94	84	2.01	1.5	90	0.016	96	95	248.7	-0.20	0.91	15.34	108.92	182.08	176.72	72.90	181.82	176	85	85	84		1.001	7.599	829
41	6.613	6.585		0.16	0.16	1.34	1.06	0.26	94	94	85	2	1.5	90	0.016	97	95	248.8	-0.03	0.89	15.46	108.74	181.97	176.60	72.94	181.68	174	86	85	85		1.001	7.439	810
42	6.776	6.748		0.16	0.16	1.34	1.06	0.26	94	94	85	2	1.5	90	0.016	96	96	248.7	0.10	0.87	15.42	108.61	181.86	176.51	72.98	181.59	172	86	85	85		1.001	7.273	791
43	6.940	6.909		0.16	0.16	1.34	1.05	0.26	94	94	85	2	1.5	90	0.015	100	98	248.6	0.06	0.91	15.49	108.46	181.74	176.43	73.01	181.48	170	86	85	85		1.001	7.596	825
44	7.103	7.071		0.16	0.16	1.34	1.06	0.26	94	94	85	2	1.5	90	0.016	96	95	248.6	-0.02	0.89	15.43	108.30	181.61	176.30	73.05	181.35	168	86	85	85		1.001	7.436	806
45	7.267	7.233		0.16	0.16	1.34	1.06	0.26	95	95	85	2.01	1.5	90	0.016	97	95	248.6	0.01	0.91	15.36	108.13	181.44	176.19	73.07	181.20	167	86	85	85		1.001	7.587	821
46	7.430	7.397		0.16	0.16	1.35	1.06	0.26	95	95	85	2	1.5	90	0.015	99	99	248.8	-0.20	0.89	15.38	107.98	181.34	176.06	73.10	181.08	165	86	85	85		1.001	7.437	804
47	7.593	7.559		0.16	0.16	1.35	1.05	0.26	95	95	85	2.01	1.5	90	0.015	99	98	248.6	0.23	0.89	15.45	107.79	181.20	175.95	73.16	180.95	164	86	85	85		1.001	7.378	796
48	7.756	7.721		0.16	0.16	1.35	1.05	0.26	95	95	85	2.02	1.5	90	0.015	99	98	248.6	-0.02	0.91	15.51	107.57	181.05	175.79	73.22	180.79	162	86	85	85		1.001	7.590	817
49	7.920	7.883		0.16	0.16	1.35	1.06	0.26	95	95	85	2	1.5	90	0.014	103	102	248.6	0.05	0.91	15.37	107.40	180.92	175.73	73.26	180.67	161	86	85	85		1.001	7.599	817

Elapsed Time	Particulate Sampling Data																	Fuel Weight, lb		Flow, gpm		Temperature Data, oF									Stack			
	Gas Meter Cubic Feet (1)	Gas Meter Cubic Feet (2)	Gas Meter Cubic Feet (amb)	Sample Rate, cfm (1)	Sample Rate, cfm (2)	Orifice dH (1)	Orifice dH (2)	Orifice dH (amb)	Meter oF (1)	Meter oF (2)	Meter oF (amb)	Meter Vac. In. Hg. (1)	Meter Vac. In. Hg. (2)	Dilution Tunnel Temp.	Dilution Tunnel dP	Pro. Rate (%) (1)	Pro. Rate (%) (2)	Scale Reading	Weight Change	Load Side Liquid Flow Rate	Boiler Side Liquid Flow Rate (optional)	Thermopile ΔT	Boiler to Heat Exch. Temp.	Heat Exch to Boiler Temp.	Inlet Load Temp.	Outlet Load Temp.	Stack	Filter (1)	Filter (2)	Ambient	Draft In. H2O	Specific Heat of Inlet Water (BTU/lb-°F)	Mass Flow Rate of Inlet Water (lb/min)	Heat Output, Btu
50	8.084	8.046		0.16	0.16	1.35	1.06	0.26	95	95	85	2.01	1.5	90	0.016	97	96	248.5	0.02	0.89	15.44	107.18	180.77	175.57	73.33	180.51	159	86	85	85		1.001	7.436	798
51	8.248	8.208		0.16	0.16	1.34	1.06	0.26	95	95	85	2.02	1.5	90	0.014	103	102	248.8	-0.25	0.91	15.40	106.99	180.65	175.48	73.41	180.40	158	86	85	85		1.001	7.597	814
52	8.411	8.370		0.16	0.16	1.34	1.06	0.26	95	95	85	2.02	1.5	90	0.016	96	95	248.7	0.12	0.86	15.44	106.73	180.48	175.31	73.48	180.21	157	86	85	85		1.001	7.112	760
53	8.575	8.532		0.16	0.16	1.34	1.06	0.26	95	95	85	2.02	1.5	90	0.014	103	102	248.8	-0.16	0.93	15.43	106.53	180.34	175.11	73.54	180.06	156	86	86	85		1.001	7.759	827
54	8.739	8.695		0.16	0.16	1.33	1.06	0.26	96	95	85	2.02	1.5	90	0.014	103	102	248.8	0.04	0.93	15.40	106.32	180.18	174.98	73.59	179.91	154	86	85	85		1.001	7.760	826
55	8.903	8.858		0.16	0.16	1.35	1.06	0.26	96	96	85	2.01	1.5	90	0.014	103	102	248.5	0.24	0.94	15.39	106.14	180.03	174.74	73.63	179.77	153	86	85	85		1.001	7.780	827
56	9.067	9.020		0.16	0.16	1.34	1.05	0.26	96	96	85	2.02	1.5	90	0.015	100	98	248.7	-0.16	0.95	15.53	105.90	179.85	174.47	73.65	179.54	152	86	86	85		1.001	7.877	835
57	9.230	9.183		0.16	0.16	1.35	1.06	0.26	96	96	85	2.01	1.5	90	0.015	99	99	248.7	-0.04	0.90	15.45	105.75	179.70	174.34	73.69	179.44	151	86	86	85		1.001	7.507	795
58	9.393	9.345		0.16	0.16	1.35	1.06	0.26	96	96	85	2.01	1.5	90	0.015	99	98	248.7	0.03	0.93	15.41	105.58	179.57	174.22	73.72	179.30	150	86	86	85		1.001	7.756	820
59	9.557	9.508		0.16	0.16	1.35	1.06	0.26	96	96	85	2.01	1.5	90	0.016	96	95	248.7	0.03	0.95	15.47	105.35	179.37	174.04	73.77	179.11	149	87	86	85		1.001	7.917	835
60	9.721	9.671		0.16	0.16	1.35	1.06	0.26	96	96	85	2.01	1.5	90	0.014	103	102	248.7	-0.04	0.93	15.52	105.18	179.20	173.89	73.76	178.94	148	87	86	85		1.001	7.755	817
61	9.885	9.833		0.16	0.16	1.35	1.06	0.26	96	96	85	2	1.5	90	0.015	100	98	248.7	-0.02	0.89	15.54	104.99	179.02	173.69	73.77	178.76	148	87	86	85		1.001	7.432	781
62	10.051	9.995		0.17	0.16	1.35	1.06	0.26	96	96	85	1.99	1.5	90	0.013	108	105	248.8	-0.03	0.97	15.35	104.81	178.86	173.55	73.80	178.61	147	87	86	85		1.001	8.079	848
63	10.215	10.158		0.16	0.16	1.34	1.06	0.26	96	96	85	1.99	1.5	90	0.016	96	95	248.7	0.09	0.95	15.47	104.58	178.69	173.30	73.85	178.43	146	87	86	85		1.001	7.918	829
64	10.380	10.321		0.17	0.16	1.35	1.06	0.26	96	96	85	2.01	1.5	90	0.014	104	102	248.8	-0.08	0.93	15.43	104.48	178.54	173.09	73.81	178.29	145	87	86	85		1.001	7.768	813
65	10.544	10.484		0.16	0.16	1.35	1.05	0.26	97	97	85	2.01	1.5	90	0.016	96	95	248.8	-0.02	0.92	15.46	104.28	178.34	172.95	73.82	178.09	144	87	86	85		1.001	7.682	802
66	10.708	10.646		0.16	0.16	1.35	1.06	0.26	97	97	85	2.01	1.5	90	0.014	103	101	248.7	0.05	0.96	15.44	104.09	178.15	172.81	73.80	177.89	143	87	86	85		1.001	7.970	831
67	10.871	10.809		0.16	0.16	1.35	1.06	0.26	97	97	85	1.99	1.5	90	0.013	106	106	248.7	0.02	0.97	15.46	103.91	177.96	172.63	73.78	177.69	143	87	86	85		1.001	8.084	841
68	11.036	10.972		0.16	0.16	1.35	1.06	0.26	97	97	85	2	1.5	90	0.014	103	102	248.8	-0.05	0.93	15.41	103.77	177.82	172.48	73.78	177.55	142	87	86	85		1.001	7.757	806
69	11.200	11.135		0.16	0.16	1.35	1.06	0.26	97	97	85	2.01	1.5	90	0.016	96	95	248.7	0.11	1.61	15.41	103.59	177.60	168.08	73.68	177.27	142	87	86	85		1.001	13.412	1391
70	11.365	11.297		0.17	0.16	1.35	1.06	0.26	97	97	85	2	1.5	90	0.014	103	101	248.7	-0.09	0.74	15.43	103.51	177.47	173.56	73.68	177.18	141	87	86	85		1.001	6.134	636
71	11.529	11.460		0.16	0.16	1.35	1.06	0.26	97	97	85	1.99	1.5	90	0.014	103	102	248.8	-0.07	0.70	15.41	103.26	177.16	173.43	73.69	176.96	140	87	86	85		1.001	5.812	601
72	11.694	11.623		0.17	0.16	1.34	1.06	0.26	97	97	85	2.01	1.5	90	0.016	97	95	248.8	-0.01	0.66	15.40	102.98	176.96	173.42	73.70	176.68	140	87	86	85		1.001	5.485	566
73	11.858	11.786		0.16	0.16	1.35	1.06	0.26	97	97	85	2.01	1.5	90	0.014	103	102	248.8	0.05	1.13	15.44	102.82	176.77	170.59	73.71	176.53	139	87	86	85		1.001	9.376	965
74	12.022	11.949		0.16	0.16	1.35	1.06	0.26	97	97	85	1.99	1.5	90	0.013	107	106	248.7	0.04	1.01	15.42	102.60	176.67	170.65	73.90	176.50	138	87	86	85		1.001	8.403	863
75	12.186	12.111		0.16	0.16	1.35	1.06	0.26	97	97	85	2.01	1.5	90	0.013	107	105	248.7	-0.01	1.01	15.32	102.47	176.45	170.44	73.80	176.28	138	87	86	85		1.001	8.415	863
76	12.350	12.274		0.16	0.16	1.35	1.06	0.26	97	97	85	2.01	1.5	90	0.014	103	102	248.8	-0.04	1.08	15.43	102.35	176.22	170.20	73.67	176.02	137	87	86	85		1.001	8.996	922
77	12.515	12.437		0.17	0.16	1.35	1.06	0.26	97	97	85	1.99	1.5	90	0.015	100	98	248.8	-0.02	1.01	15.42	102.25	176.07	170.08	73.62	175.87	137	87	86	85		1.001	8.406	861
78	12.679	12.601		0.16	0.16	1.35	1.06	0.26	97	97	85	1.99	1.5	90	0.017	93	93	248.7	0.09	1.07	15.36	101.91	175.85	169.87	73.74	175.65	136	87	86	85		1.001	8.888	907
79	12.844	12.763		0.16	0.16	1.34	1.06	0.26	97	97	85	2	1.5	90	0.015	100	98	248.6	0.07	1.09	15.34	101.77	175.67	169.58	73.67	175.45	136	87	86	85		1.001	9.049	922
80	13.009	12.926		0.17	0.16	1.34	1.06	0.26	97	97	85	1.99	1.5	90	0.016	97	95	248.8	-0.17	1.13	15.40	101.60	175.45	169.47	73.65	175.25	135	87	86	85		1.001	9.374	954
81	13.173	13.088		0.16	0.16	1.35	1.06	0.26	98	97	85	2	1.5	90	0.016	96	95	248.9	-0.05	0.74	15.43	101.35	175.23	171.06	73.68	175.03	135	87	86	85		1.001	6.133	622
82	13.338	13.252		0.16	0.16	1.35	1.06	0.26	98	97	85	2.01	1.5	90	0.016	97	96	248.9	-0.02	0.76	15.43	101.11	174.97	170.95	73.70	174.81	134	87	86	85		1.001	6.297	637
83	13.501	13.415		0.16	0.16	1.35	1.06	0.26	98	97	85	2.01	1.5	90	0.014	102	102	248.7	0.14	1.05	15.45	100.89	174.77	169.48	73.68	174.57	134	87	86	85		1.001	8.725	881
84	13.666	13.578		0.17	0.16	1.35	1.06	0.26	98	97	85	2.01	1.5	90	0.016	97	95	248.9	-0.17	0.99	15.41	100.74	174.58	168.89	73.67	174.41	134	87	86	85		1.001	8.250	832
85	13.830	13.740		0.16	0.16	1.35	1.06	0.26	98	98	85	2.01	1.5	90	0.013	107	105	249.0	-0.07	1.02	15.40	100.51	174.42	168.68	73.71	174.21	133	87	86	85		1.001	8.518	857
86	13.995	13.903		0.16	0.16	1.35	1.06	0.26	98	98	85	2	1.5	90	0.016	97	95	248.8	0.16	1.03	15.46	100.37	174.18	168.36	73.62	173.99	132	87	86	85		1.001	8.563	861
87	14.159	14.066		0.16	0.16	1.34	1.06	0.26	98	98	85	2	1.5	90	0.014	103	102	248.7	0.11	1.01	15.38	100.16	173.97	168.16	73.60	173.76	132	87	86	85		1.001	8.403	843
88	14.324	14.230		0.16	0.16	1.35	1.06	0.26	98	98	85	2	1.5	90	0.016	97	96	248.8	-0.09	1.01	15.38	99.96	173.79	168.09	73.63	173.59	131	87	86	85		1.001	8.405	841
89	14.489	14.393		0.17	0.16	1.35	1.06	0.26	98	98	85	2.01	1.5	90	0.014	103	102	248.8	-0.03	0.95	15.53	99.69	173.57	168.02	73.68	173.37	131	87	86	85		1.001	7.918	790
90	14.653	14.555		0.16	0.16	1.35	1.06	0.26	98	98	85	2	1.5	90	0.016	96	94	248.7	0.18	1.26	15.46	99.59	173.33	165.94	73.56	173.15	147	87	86	85		1.001	10.504	1047
91	14.817	14.717		0.16	0.16	1.35	1.06	0.26	98	98	85	2.01	1.5	95	0.017	94	92	248.6	0.08	1.03	15.39	99.34	173.15	167.42	73.58	172.92	154	87	86	85		1.001	8.567	852
92	14.981	14.881		0.16	0.16	1.35	1.07	0.26	98	98	85	2.01	1.5	91	0.013	107	106	248.5	0.07	1.01	15.39	99.18	172.92	167.36	73.55	172.74	146	87	86	85		1.001	8.402	834
93	15.145	15.044		0.16	0.16	1.35	1.06	0.26	98	98	85	2.02	1.5	90	0.014	103	102	248.5	-0.01	0.97	15.45	99.00	172.72	167.04	73.50	172.50	141	87	86	85		1.001	8.077	801
94	15.310	15.207		0.17	0.16	1.35	1.05	0.26	98	98	85	2	1.5	90	0.016	97	95	248.6	-0.08	1.07	15.42	98.79	172.53	166.66	73.50	172.29	138	87	86	85		1.001	8.888	879
95	15.475	15.370		0.16	0.16	1.34	1.06	0.26	98	98	85	2	1.5	90	0.015	100	98	248.5	0.07	1.05	15.39	98.49	172.27	166.47	73.56	172.04	136	87	86	85		1.001	8.728	861
96	15.640	15.533		0.17	0.16	1.35	1.06	0.26	98	98	85	2.01	1.5	90	0.015	100	98	248.7	-0.15	1.01	15.39	98.25	172.03	166.17	73.56	171.81	134	87	86	85		1.001	8.402	826
97	15.804	15.696		0.16	0.16	1.35	1.06	0.26	98	98	85	2.02	1.5	90	0.014	103	102	248.5	0.17	1.05	15.44	97.99	171.85	166.05	73.61	171.60	133	87	86	85		1.001	8.727	856
98	15.969	15.859		0.16	0.16	1.34	1.06	0.26	98	98	85	2.02	1.5	89	0.015	100	98	248.6	-0.04	1.03	15.43	97.71	171.60	165.86	73.66	171.38	132	87	86	85		1.001	8.565	838
99	16.133	16.022		0.16	0.16	1.35	1.06	0.26	98	98	85	2.02	1.5	89	0.015	99	98	248.6	-0.08	1.01	15.39	97.45	171.38	165.59	73.70	171.15	132	87	86	85		1.001	8.402	820
100	16.297	16.185		0.16	0.16	1.35	1.06	0.26	98	98	85	2	1.5	89	0.015	99	98	248.6	0.07	1.07	15.44	97.22	171.13	165.31	73.67	170.89	131	87	86	85		1.001	8.888	865
101	16.462	16.348		0.16	0.16	1.35	1.06	0.26	98	98	85	2	1.5	90	0.013	107	105	248.5	0.10	1.05	15.49	96.88	170.91	165.15	73.79	170.67	130	87	86	85		1.001	8.724	846
102	16.626	16.511		0.16	0.16	1.35	1.06	0.26	98	98	85	2.02	1.5	89	0.015	99	98	248.4	0.07	1.03	15.45	96.70	170.70	164.90	73.76	170.46	130	87	86	85		1.001	8.563	829
103	16.791	16.675		0.16	0.16	1.35	1.06	0.26	98	98	85	2.02	1.5	89	0.013	107	106	248.5	-0.09	1.09	15.42	96.43	170.46	164.69	73.80	170.22	129	87	86	85		1.001	9.048	873
104	16.956	16.837		0.16	0.16	1.34	1.06	0.26	98	98	85	2	1.5	89	0.014	103	101	248.6	-0.08	1.07	15.44	96.23	170.27	164.53	73.79	170.03	129	87	86	85		1.001	8.886	856
105	17.121	17.000		0.16	0.16	1.35	1.06	0.26	98	98	85	2.02	1.5	89	0.014	103	102	248.6	-0.03	0.99	15.45	96.01	170.02	164.33	73.79	169.80	129	87	86	85		1.001	8.267	795
106	17.285	17.163		0.16	0.16	1.35	1.06	0.26	98	98	85	2.01	1.5	89	0.014	103	102	248.6	0.03	1.08	15.42	95.74	169.77	164.06	73.80	169.55	128	87	86	85		1.001	9.012	864
107	17.449	17.326		0.16	0.16	1.35	1.06	0.26	99	98	85	2	1.5	89	0.014	102	102	248.6	0.00	1.05	15.43	95.48	169.53	163.85	73.81	169.30	128	87	86	85		1.001	8.725	834
108	17.614	17.490		0.16	0.16	1.36	1.06	0.26	99	98	85	2.01	1.5	89	0.014	103	102	248.5	0.07	1.09	15.40	95.34	169.37	163.69	73.77	169.11	127	87	86	85		1.001	9.049	864
109	17.779	17.652		0.16	0.16	1.36	1.06	0.26	99	98	85	2	1.5	89	0.016	96	94	248.5	-0.03	1.09	15.44	95.03	169.09	163.41	73.83	168.86	127	86	86	85		1.001	9.048	861
110	17.943	17.815		0.16	0.16	1.35	1.06	0.26	99	98	85	2.01	1.5	89	0.014	102	102	248.6	-0.07	1.07	15.36	94.84	168.85	163.17	73.78	168.62	126	84	86	85		1.001	8.887	844
111	18.108	17.979		0.16	0.16	1.34	1.06	0.26	99	98	85	2.01	1.5	89	0.015	99	99	248.6	0.02	1.01	15.38	94.67	168.65	162.99	73.72	168.39	126	82	86	85		1.001	8.403	796

Elapsed Time	Particulate Sampling Data																	Fuel Weight, lb		Flow, gpm		Temperature Data, oF									Stack			
	Gas Meter Cubic Feet (1)	Gas Meter Cubic Feet (2)	Gas Meter Cubic Feet (amb)	Sample Rate, cfm (1)	Sample Rate, cfm (2)	Orifice dH (1)	Orifice dH (2)	Orifice dH (amb)	Meter oF (1)	Meter oF (2)	Meter oF (amb)	Meter Vac. In. Hg. (1)	Meter Vac. In. Hg. (2)	Dilution Tunnel Temp.	Dilution Tunnel dP	Pro. Rate (%) (1)	Pro. Rate (%) (2)	Scale Reading	Weight Change	Load Side Liquid Flow Rate	Boiler Side Liquid Flow Rate (optional)	Thermopile ΔT	Boiler to Heat Exch. Temp.	Heat Exch to Boiler Temp.	Inlet Load Temp.	Outlet Load Temp.	Stack	Filter (1)	Filter (2)	Ambient	Draft In. H2O	Specific Heat of Inlet Water (BTU/lb-°F)	Mass Flow Rate of Inlet Water (lb/min)	Heat Output, Btu
112	18.273	18.142		0.16	0.16	1.35	1.06	0.26	99	98	85	2.01	1.5	89	0.014	103	102	248.4	0.14	1.11	15.46	94.40	168.40	162.75	73.75	168.15	125	81	86	85		1.001	9.212	871
113	18.438	18.305		0.16	0.16	1.35	1.06	0.26	99	98	85	2.01	1.5	89	0.014	103	102	248.6	-0.21	1.05	15.49	94.29	168.28	162.64	73.73	168.02	125	81	86	85		1.001	8.727	824
114	18.602	18.468		0.16	0.16	1.35	1.06	0.26	99	98	85	2.01	1.5	89	0.013	106	105	248.5	0.16	1.05	15.47	93.99	167.96	162.58	73.72	167.70	125	80	85	85		1.001	8.725	821
115	18.767	18.631		0.16	0.16	1.35	1.06	0.26	99	98	85	2	1.5	89	0.016	96	95	248.5	-0.02	1.42	15.44	93.84	167.79	160.49	73.66	167.50	125	80	85	85		1.001	11.798	1108
116	18.931	18.795		0.16	0.16	1.35	1.07	0.26	99	98	85	2.01	1.5	89	0.013	106	106	248.6	-0.08	1.36	15.45	93.57	167.52	160.08	73.65	167.22	124	81	85	85		1.001	11.316	1060
117	19.096	18.958		0.16	0.16	1.35	1.06	0.26	99	99	85	2.01	1.5	89	0.014	103	101	248.5	0.07	1.34	15.41	93.43	167.29	159.84	73.56	167.00	124	81	86	85		1.001	11.170	1045
118	19.261	19.121		0.16	0.16	1.35	1.06	0.26	99	99	85	2.01	1.5	89	0.014	103	101	248.5	-0.03	1.36	15.44	93.20	167.01	159.57	73.53	166.73	124	82	86	85		1.001	11.274	1052
119	19.426	19.285		0.16	0.16	1.35	1.06	0.26	99	99	85	2.01	1.5	90	0.016	96	95	248.6	-0.05	1.38	15.38	93.01	166.79	159.40	73.49	166.50	124	82	86	85		1.001	11.474	1068
120	19.591	19.447		0.17	0.16	1.35	1.06	0.26	99	99	85	2	1.5	90	0.013	107	105	248.6	0.00	1.41	15.43	92.78	166.50	159.12	73.44	166.22	123	83	86	85		1.001	11.696	1086
121	19.755	19.611		0.16	0.16	1.35	1.06	0.26	99	99	85	2.01	1.5	90	0.016	96	95	248.4	0.17	1.38	15.43	92.58	166.23	158.88	73.38	165.96	141	83	86	85		1.001	11.477	1064
122	19.919	19.773		0.16	0.16	1.35	1.07	0.26	99	99	85	2	1.5	93	0.012	111	109	248.2	0.21	1.38	15.44	92.34	165.92	158.64	73.33	165.66	145	84	86	85		1.001	11.473	1061
123	20.084	19.937		0.16	0.16	1.36	1.06	0.26	99	99	85	2	1.5	90	0.016	96	95	248.3	-0.12	0.91	15.50	92.11	165.61	160.82	73.32	165.44	138	84	86	85		1.001	7.592	700
124	20.247	20.100		0.16	0.16	1.33	1.06	0.26	99	99	85	2	1.5	90	0.014	102	101	248.4	-0.05	0.91	15.42	91.79	165.29	160.55	73.33	165.12	134	84	86	85		1.001	7.596	698
125	20.410	20.263		0.16	0.16	1.32	1.06	0.26	99	99	85	1.98	1.5	90	0.014	102	101	248.2	0.14	0.89	15.41	91.42	164.95	160.24	73.33	164.75	131	83	86	85		1.001	7.436	681
126	20.574	20.426		0.16	0.16	1.32	1.06	0.26	99	99	85	1.99	1.5	90	0.014	102	101	248.4	-0.12	1.42	15.36	91.28	164.81	157.36	73.20	164.47	129	81	85	85		1.001	11.802	1078
127	20.737	20.589		0.16	0.16	1.32	1.06	0.26	99	99	85	1.99	1.5	90	0.015	98	98	248.3	0.08	1.26	15.42	91.22	164.52	157.66	73.15	164.37	127	80	85	85		1.001	10.507	960
128	20.901	20.753		0.16	0.16	1.32	1.06	0.26	99	99	85	1.99	1.5	90	0.013	106	106	248.2	0.04	1.32	15.42	90.94	164.26	157.39	73.16	164.10	127	79	85	85		1.001	10.992	1001
129	21.064	20.916		0.16	0.16	1.32	1.06	0.26	99	99	85	1.99	1.5	89	0.014	102	101	248.3	-0.01	0.95	15.43	90.58	164.02	159.17	73.26	163.85	126	79	85	85		1.001	7.918	718
130	21.227	21.079		0.16	0.16	1.33	1.06	0.26	99	99	85	1.99	1.5	90	0.014	102	101	248.3	-0.03	0.91	15.47	90.13	163.72	158.95	73.45	163.57	125	79	85	85		1.001	7.586	684
131	21.391	21.242		0.16	0.16	1.33	1.07	0.26	99	99	85	1.99	1.5	89	0.014	102	101	248.3	-0.02	0.95	15.46	90.02	163.59	158.78	73.40	163.42	124	79	85	85		1.001	7.920	714
132	21.554	21.405		0.16	0.16	1.33	1.06	0.26	99	99	85	1.99	1.5	90	0.014	102	101	248.3	0.05	0.96	15.45	89.87	163.38	158.56	73.34	163.21	123	79	85	85		1.001	7.972	717
133	21.717	21.569		0.16	0.16	1.33	1.06	0.26	99	99	85	1.98	1.5	89	0.014	102	102	248.3	-0.05	1.63	15.37	89.55	163.04	154.73	73.22	162.78	123	79	85	85		1.001	13.580	1218
134	21.880	21.732		0.16	0.16	1.33	1.06	0.26	99	99	85	1.98	1.5	89	0.014	102	101	248.4	-0.07	1.32	15.41	89.51	162.84	156.18	73.13	162.65	122	79	85	85		1.001	10.990	985
135	22.043	21.895		0.16	0.16	1.33	1.06	0.26	99	99	85	1.98	1.5	89	0.014	102	101	248.3	0.10	1.13	15.28	89.25	162.60	156.76	73.17	162.41	122	79	85	85		1.001	9.375	838
136	22.207	22.058		0.16	0.16	1.33	1.06	0.26	99	99	85	1.99	1.5	89	0.014	102	101	248.2	0.03	1.11	15.42	88.97	162.34	156.52	73.17	162.14	122	79	85	85		1.001	9.215	821
137	22.370	22.221		0.16	0.16	1.33	1.06	0.26	99	99	85	1.99	1.5	89	0.013	106	105	248.2	0.08	1.13	15.37	88.61	162.08	156.24	73.27	161.87	122	79	85	85		1.001	9.373	831
138	22.534	22.385		0.16	0.16	1.32	1.05	0.26	99	99	85	2	1.5	96	0.015	100	99	247.8	0.39	1.11	15.39	88.39	161.94	156.13	73.29	161.68	153	80	85	85		1.001	9.214	815
139	22.697	22.547		0.16	0.16	1.32	1.05	0.26	99	99	85	2	1.5	100	0.015	99	98	247.4	0.40	1.55	15.40	88.09	161.60	154.62	73.31	161.40	173	80	85	85		1.001	12.930	1140
140	22.860	22.709		0.16	0.16	1.33	1.06	0.26	99	99	85	1.99	1.5	103	0.014	103	102	246.2	1.13	1.59	15.38	88.04	161.62	153.43	73.26	161.30	194	80	85	85		1.001	13.252	1168
141	23.023	22.871		0.16	0.16	1.32	1.06	0.26	99	99	85	2	1.5	108	0.016	97	96	245.5	0.74	1.36	15.43	88.25	161.74	154.70	73.26	161.51	217	81	85	85		1.001	11.310	999
142	23.185	23.034		0.16	0.16	1.32	1.07	0.26	99	99	85	2.01	1.5	113	0.015	100	100	244.6	0.87	1.24	15.50	88.49	162.00	155.34	73.27	161.76	233	82	85	85		1.001	10.350	917
143	23.348	23.196		0.16	0.16	1.32	1.06	0.26	99	99	85	2.02	1.5	115	0.016	97	96	243.9	0.73	1.36	15.41	88.93	162.47	155.73	73.28	162.21	243	83	85	85		1.001	11.314	1007
144	23.510	23.358		0.16	0.16	1.33	1.06	0.26	99	99	85	2.01	1.5	118	0.015	100	100	242.8	1.10	1.19	15.42	89.61	163.20	156.92	73.29	162.90	250	84	85	85		1.001	9.859	884
145	23.673	23.520		0.16	0.16	1.33	1.06	0.26	99	99	85	2.02	1.5	119	0.015	101	100	242.0	0.78	1.22	15.42	90.30	163.92	157.62	73.31	163.61	255	85	85	85		1.001	10.123	915
146	23.835	23.682		0.16	0.16	1.32	1.06	0.26	99	99	85	2.03	1.5	120	0.016	97	97	241.2	0.82	1.21	15.42	90.94	164.59	158.28	73.32	164.26	257	85	85	85		1.001	10.022	912
147	23.997	23.844		0.16	0.16	1.33	1.06	0.26	99	99	85	2.01	1.5	121	0.015	100	100	240.2	0.96	1.19	15.46	91.83	165.46	159.02	73.30	165.13	260	86	85	85		1.001	9.862	907
148	24.159	24.005		0.16	0.16	1.33	1.06	0.26	99	99	85	2.04	1.5	122	0.014	104	103	239.1	1.12	1.17	15.40	92.53	166.13	159.67	73.27	165.79	263	86	85	85		1.001	9.698	898
149	24.321	24.167		0.16	0.16	1.32	1.05	0.26	99	99	85	2.04	1.5	122	0.015	101	100	238.2	0.91	1.26	15.38	93.51	167.11	160.59	73.25	166.76	263	87	85	85		1.001	10.508	984
150	24.483	24.329		0.16	0.16	1.32	1.05	0.26	99	99	85	2.02	1.5	123	0.015	101	100	237.8	0.37	0.91	15.47	94.34	167.95	162.30	73.25	167.59	266	87	85	85		1.001	7.594	717
151	24.645	24.490		0.16	0.16	1.32	1.05	0.26	99	99	85	2.04	1.5	123	0.014	104	103	236.7	1.14	0.95	15.41	94.99	168.64	163.40	73.29	168.28	266	87	85	85		1.001	7.918	753
152	24.807	24.651		0.16	0.16	1.32	1.05	0.26	99	99	85	2.04	1.5	124	0.014	104	103	235.8	0.94	0.97	15.48	95.85	169.66	164.32	73.35	169.19	269	88	85	85		1.001	8.079	775
153	24.969	24.812		0.16	0.16	1.32	1.05	0.26	99	99	85	2.05	1.5	125	0.015	101	100	234.9	0.87	1.48	15.45	96.91	170.59	161.97	73.23	170.14	271	88	85	85		1.001	12.301	1193
154	25.131	24.974		0.16	0.16	1.31	1.05	0.26	99	99	85	2.05	1.5	124	0.016	98	97	234.2	0.69	1.54	15.47	98.00	171.60	162.66	73.13	171.13	270	88	85	85		1.001	12.772	1253
155	25.293	25.134		0.16	0.16	1.32	1.05	0.26	99	99	85	2.04	1.5	126	0.015	101	99	233.1	1.14	1.11	15.46	98.97	172.45	165.84	73.11	172.08	273	89	85	85		1.001	9.211	913
156	25.454	25.295		0.16	0.16	1.32	1.05	0.26	99	99	85	2.05	1.5	127	0.015	100	100	232.3	0.81	1.10	15.47	99.72	173.29	166.71	73.17	172.89	275	89	85	85		1.001	9.134	912
157	25.616	25.456		0.16	0.16	1.32	1.04	0.26	99	99	85	2.04	1.6	127	0.015	101	100	231.5	0.80	1.13	15.45	100.67	174.34	167.76	73.26	173.93	276	89	86	85		1.001	9.377	945
158	25.777	25.617		0.16	0.16	1.31	1.04	0.26	99	99	85	2.06	1.6	127	0.016	97	97	230.6	0.88	1.09	15.47	101.68	175.27	168.68	73.21	174.89	273	90	86	85		1.001	9.048	921
159	25.939	25.776		0.16	0.16	1.31	1.04	0.26	99	99	85	2.05	1.6	127	0.014	105	102	229.8	0.73	1.15	15.38	102.59	176.16	169.52	73.17	175.76	276	90	86	85		1.001	9.532	979
160	26.100	25.937		0.16	0.16	1.31	1.04	0.26	99	99	85	2.05	1.6	127	0.016	97	97	228.8	1.03	1.09	15.47	103.51	177.11	170.36	73.17	176.68	277	90	86	85		1.001	9.046	937
161	26.262	26.098		0.16	0.16	1.30	1.04	0.26	99	99	85	2.07	1.6	127	0.015	101	100	227.8	0.99	1.07	15.46	104.49	178.12	171.34	73.16	177.65	277	90	86	85		1.001	8.886	930
162	26.423	26.258		0.16	0.16	1.31	1.04	0.26	99	99	85	2.06	1.6	127	0.013	108	107	227.1	0.71	1.07	15.50	105.41	178.96	172.54	73.18	178.59	275	90	86	85		1.001	8.886	938
163	26.584	26.418		0.16	0.16	1.30	1.04	0.26	99	99	84	2.07	1.6	127	0.016	97	96	226.1	1.03	1.01	15.39	106.20	179.77	173.52	73.22	179.42	278	90	86	84		1.001	8.399	893
164	26.745	26.579		0.16	0.16	1.30	1.04	0.26	99	99	85	2.08	1.6	127	0.015	100	100	225.5	0.60	1.03	15.44	107.10	180.68	174.61	73.23	180.34	278	89	86	85		1.001	8.558	918
165	26.906	26.738		0.16	0.16	1.30	1.04	0.26	99	99	85	2.09	1.6	128	0.016	97	96	224.6	0.84	1.07	15.40	108.04	181.67	175.53	73.27	181.31	281	88	86	85		1.001	8.885	961
166	27.066	26.899		0.16	0.16	1.31	1.05	0.26	99	99	85	2.07	1.5	124	0.016	96	97	223.9	0.73	0.87	15.44	108.88	182.68	177.17	73.36	182.24	270	87	86	85		1.001	7.268	792
167	27.228	27.060		0.16	0.16	1.32	1.04	0.26	99	99	85	2.07	1.5	106	0.013	107	105	223.4	0.49	0.97	15.32	109.65	183.50	177.46	73.44	183.09	249	83	85	85		1.001	8.077	887
168	27.391	27.220		0.16	0.16	1.32	1.03	0.26	99	99	85	2.07	1.5	101	0.014	103	101	223.0	0.47	0.97	15.38	109.96	183.73	177.76	73.47	183.43	238	82	85	85		1.001	8.077	889
169	27.553	27.381		0.16	0.16	1.32	1.04	0.26	99	99	85	2.06	1.5	97	0.014	102	101	222.9	0.08	0.97	15.46	110.04	183.83	177.84	73.50	183.54	231	81	85	85		1.001	8.078	890
170	27.716	27.543		0.16	0.16	1.32	1.04	0.26	99	99	85	2.05	1.5	97	0.015	99	98	222.7	0.21	0.95	15.38	110.10	183.92	177.98	73.50	183.60	223	82	85	85		1.001	7.915	872
171	27.879	27.705		0.16	0.16	1.32	1.04	0.26	99	99	85	2.06	1.5	97	0.015	99	98	222.6	0.06	0.99	15.42	110.14	184.01	178.02	73.55	183.69	215	82	85	85		1.001	8.238	908
172	28.041	27.866		0.16	0.16	1.32	1.05	0.26	99	99	85	2.06	1.5	96	0.015	98	97	222.4	0.22	0.97	15.32	110.12	184.09	178.11	73.67	183.78	210	81	85	85		1.001	8.075	890
173	28.204	28.028		0.16	0.16	1.33	1.05	0.26	99	99	85	2.04	1.5	95	0.015	99	98	222.3	0.08	0.99	15.41	110.09	184.00	177.99	73.61	183.70	206	80	85	85		1.001	8.242	908

Elapsed Time	Particulate Sampling Data																	Fuel Weight, lb		Flow, gpm		Temperature Data, oF									Stack			
	Gas Meter Cubic Feet (1)	Gas Meter Cubic Feet (2)	Gas Meter Cubic Feet (amb)	Sample Rate, cfm (1)	Sample Rate, cfm (2)	Orifice dH (1)	Orifice dH (2)	Orifice dH (amb)	Meter oF (1)	Meter oF (2)	Meter oF (amb)	Meter Vac. In. Hg. (1)	Meter Vac. In. Hg. (2)	Dilution Tunnel Temp.	Dilution Tunnel dP	Pro. Rate (%) (1)	Pro. Rate (%) (2)	Scale Reading	Weight Change	Load Side Liquid Flow Rate	Boiler Side Liquid Flow Rate (optional)	Thermopile ΔT	Boiler to Heat Exch. Temp.	Heat Exch to Boiler Temp.	Inlet Load Temp.	Outlet Load Temp.	Stack	Filter (1)	Filter (2)	Ambient	Draft In. H2O	Specific Heat of Inlet Water (BTU/lb-°F)	Mass Flow Rate of Inlet Water (lb/min)	Heat Output, Btu
174	28.368	28.191		0.16	0.16	1.33	1.05	0.26	99	99	85	2.04	1.5	95	0.015	99	98	222.2	0.13	1.03	15.40	110.13	184.08	178.09	73.63	183.76	203	80	85	85		1.001	8.548	942
175	28.531	28.354		0.16	0.16	1.34	1.05	0.26	99	99	85	2.03	1.5	94	0.016	96	95	222.3	-0.08	0.98	15.38	110.13	184.06	178.05	73.62	183.75	201	80	85	85		1.001	8.174	901
176	28.695	28.515		0.16	0.16	1.33	1.05	0.26	99	99	85	2.03	1.5	93	0.015	99	97	222.1	0.17	0.95	15.34	110.07	184.01	178.06	73.64	183.71	200	79	85	85		1.001	7.881	868
177	28.859	28.678		0.16	0.16	1.33	1.05	0.26	99	99	85	2.02	1.5	92	0.012	111	110	222.1	0.00	0.93	15.37	110.04	184.03	178.06	73.69	183.74	198	79	85	85		1.001	7.752	854
178	29.023	28.840		0.16	0.16	1.33	1.06	0.26	99	99	85	2.03	1.5	92	0.014	103	101	222.0	0.05	0.89	15.44	110.04	184.00	178.11	73.65	183.70	196	79	85	85		1.001	7.429	818
179	29.187	29.004		0.16	0.16	1.33	1.05	0.26	99	99	85	2.02	1.5	92	0.015	99	99	221.9	0.17	1.03	15.54	109.96	183.99	178.02	73.71	183.67	193	79	85	85		1.001	8.562	943
180	29.351	29.167		0.16	0.16	1.34	1.05	0.26	99	99	85	2.03	1.5	92	0.013	107	105	221.9	-0.06	1.03	15.34	109.95	183.95	178.04	73.72	183.67	191	78	85	85		1.001	8.561	942
181	29.515	29.329		0.16	0.16	1.33	1.06	0.26	99	99	85	2.03	1.5	92	0.014	103	101	221.9	-0.01	0.97	15.40	109.89	183.87	177.97	73.69	183.57	188	78	85	85		1.001	8.075	888
182	29.678	29.491		0.16	0.16	1.34	1.06	0.26	99	99	85	2.02	1.5	91	0.014	102	101	221.9	0.07	0.97	15.35	109.78	183.82	177.85	73.73	183.51	186	78	85	85		1.001	8.077	888
183	29.842	29.655		0.16	0.16	1.34	1.06	0.26	99	99	85	2.03	1.5	91	0.014	103	102	221.9	-0.07	0.91	15.54	109.69	183.72	177.80	73.73	183.42	184	78	85	85		1.001	7.592	834
184	30.006	29.818		0.16	0.16	1.33	1.06	0.26	99	99	84	2.02	1.5	91	0.014	103	102	221.8	0.17	0.99	15.41	109.56	183.63	177.72	73.78	183.35	182	78	85	84		1.001	8.240	904
185	30.170	29.981		0.16	0.16	1.34	1.06	0.26	99	99	85	2.02	1.5	91	0.015	99	98	221.7	0.05	0.99	15.44	109.46	183.57	177.64	73.83	183.29	180	78	85	85		1.001	8.238	903
186	30.334	30.143		0.16	0.16	1.32	1.06	0.26	99	99	85	2.01	1.5	91	0.015	99	97	221.9	-0.15	0.91	15.46	109.31	183.44	177.51	73.85	183.16	178	79	85	85		1.001	7.592	831
187	30.498	30.306		0.16	0.16	1.33	1.06	0.26	99	99	85	2	1.5	91	0.014	103	102	221.8	0.09	0.97	15.43	109.22	183.35	177.42	73.83	183.05	176	79	85	85		1.001	8.077	883
188	30.661	30.469		0.16	0.16	1.32	1.06	0.26	99	99	85	2.01	1.5	91	0.014	102	102	221.8	0.01	0.99	15.38	109.14	183.25	177.28	73.83	182.96	174	79	85	85		1.001	8.239	900
189	30.825	30.633		0.16	0.16	1.32	1.06	0.26	99	99	85	2	1.5	91	0.013	106	106	221.8	-0.07	0.97	15.38	108.99	183.13	177.20	73.86	182.85	173	79	85	85		1.001	8.074	881
190	30.988	30.795		0.16	0.16	1.32	1.05	0.26	99	99	85	2	1.5	91	0.015	98	97	221.8	0.05	0.91	15.50	108.83	183.03	177.33	73.91	182.74	171	79	85	85		1.001	7.590	827
191	31.152	30.958		0.16	0.16	1.33	1.05	0.26	99	99	85	2.01	1.5	91	0.014	103	102	221.9	-0.10	0.93	15.44	108.73	182.93	177.08	73.90	182.64	169	80	85	85		1.001	7.753	844
192	31.316	31.121		0.16	0.16	1.32	1.06	0.26	99	99	85	2.02	1.5	91	0.014	103	102	221.6	0.23	1.01	15.41	108.60	182.80	176.93	73.91	182.51	168	80	85	85		1.001	8.400	913
193	31.479	31.284		0.16	0.16	1.32	1.06	0.26	99	99	85	2	1.5	91	0.013	106	105	221.7	-0.05	0.93	15.52	108.48	182.68	176.87	73.91	182.39	166	80	85	85		1.001	7.752	842
194	31.641	31.447		0.16	0.16	1.32	1.05	0.26	99	99	85	2	1.5	90	0.014	101	101	221.7	0.04	0.89	15.40	108.39	182.55	176.71	73.88	182.26	165	80	85	85		1.001	7.423	805
195	31.804	31.609		0.16	0.16	1.33	1.05	0.26	99	99	85	2.01	1.5	90	0.013	106	105	221.9	-0.20	0.97	15.44	108.20	182.41	176.58	73.92	182.12	163	80	85	85		1.001	8.076	875
196	31.968	31.772		0.16	0.16	1.32	1.05	0.26	99	99	85	2.01	1.5	90	0.014	102	101	221.7	0.19	0.95	15.45	108.09	182.26	176.42	73.89	181.98	162	81	85	85		1.001	7.913	856
197	32.131	31.935		0.16	0.16	1.32	1.06	0.26	99	99	85	2	1.5	90	0.014	102	101	221.8	-0.14	1.01	15.36	107.92	182.11	176.34	73.90	181.82	161	81	85	85		1.001	8.398	907
198	32.294	32.098		0.16	0.16	1.32	1.06	0.26	99	99	85	2.01	1.5	90	0.015	98	98	221.6	0.25	0.97	15.46	107.78	182.02	176.25	73.94	181.72	159	81	85	85		1.001	8.075	871
199	32.458	32.261		0.16	0.16	1.32	1.06	0.26	99	99	85	2	1.5	90	0.015	99	98	221.8	-0.27	0.89	15.39	107.65	181.83	176.06	73.92	181.57	158	81	85	85		1.001	7.427	801
200	32.621	32.423		0.16	0.16	1.32	1.06	0.26	99	99	85	2.01	1.5	90	0.012	110	109	221.8	0.07	0.97	15.38	107.51	181.69	175.95	73.91	181.41	157	81	85	85		1.001	8.076	869
201	32.784	32.586		0.16	0.16	1.32	1.06	0.26	99	99	85	2.02	1.5	90	0.013	106	105	221.7	0.03	0.97	15.38	107.41	181.53	175.80	73.83	181.25	156	81	85	85		1.001	8.074	868
202	32.948	32.749		0.16	0.16	1.32	1.06	0.26	99	99	85	2.01	1.5	90	0.013	106	105	221.9	-0.14	0.95	15.44	107.30	181.39	175.66	73.80	181.10	154	81	85	85		1.001	7.911	850
203	33.111	32.912		0.16	0.16	1.32	1.06	0.26	99	99	85	2	1.5	90	0.015	98	98	221.7	0.21	0.95	15.33	107.12	181.23	175.56	73.82	180.95	153	81	85	85		1.001	7.923	850
204	33.274	33.075		0.16	0.16	1.33	1.06	0.26	99	99	85	2.02	1.5	90	0.013	106	105	221.9	-0.22	0.99	15.39	106.96	181.06	175.39	73.82	180.77	152	81	85	85		1.001	8.222	880
205	33.438	33.237		0.16	0.16	1.32	1.05	0.26	99	99	85	2.01	1.5	90	0.015	99	97	221.8	0.06	0.99	15.36	106.82	180.87	175.22	73.75	180.58	151	81	85	85		1.001	8.237	881
206	33.601	33.400		0.16	0.16	1.33	1.06	0.26	99	99	85	2	1.5	90	0.014	102	101	221.9	-0.11	0.99	15.52	106.72	180.72	175.06	73.73	180.46	150	81	85	85		1.001	8.235	880
207	33.764	33.563		0.16	0.16	1.32	1.06	0.26	99	99	85	2.01	1.5	90	0.014	102	101	221.8	0.14	0.93	15.43	106.51	180.55	174.87	73.76	180.27	149	82	85	85		1.001	7.752	827
208	33.927	33.727		0.16	0.16	1.33	1.05	0.26	99	99	85	2.01	1.5	90	0.014	102	102	221.8	0.01	0.93	15.39	106.38	180.40	174.69	73.75	180.12	149	82	85	85		1.001	7.752	826
209	34.090	33.889		0.16	0.16	1.33	1.05	0.26	99	99	85	2.02	1.5	90	0.012	110	109	221.7	0.05	0.93	15.33	106.18	180.21	174.47	73.75	179.93	148	82	85	85		1.001	7.755	824
210	34.253	34.052		0.16	0.16	1.33	1.06	0.26	99	99	85	2.01	1.5	90	0.014	102	101	221.8	-0.12	1.01	15.38	106.03	180.05	174.32	73.76	179.79	147	82	85	85		1.001	8.400	892
211	34.416	34.214		0.16	0.16	1.32	1.06	0.26	99	99	85	2	1.5	90	0.016	95	94	221.9	-0.08	0.97	15.38	105.79	179.86	174.20	73.79	179.58	146	82	85	85		1.001	8.073	855
212	34.580	34.377		0.16	0.16	1.32	1.06	0.26	99	99	85	2.01	1.5	90	0.013	106	105	221.9	0.06	0.95	15.45	105.64	179.70	174.04	73.79	179.43	145	83	85	85		1.001	7.921	838
213	34.743	34.541		0.16	0.16	1.33	1.06	0.26	99	99	85	2.02	1.5	90	0.016	95	95	221.8	0.01	0.97	15.39	105.41	179.51	173.86	73.83	179.24	145	83	85	85		1.001	8.077	852
214	34.906	34.703		0.16	0.16	1.32	1.06	0.26	99	99	85	2.01	1.5	90	0.014	102	101	221.8	0.05	0.98	15.39	105.24	179.34	173.60	73.85	179.08	144	83	85	85		1.001	8.167	860
215	35.070	34.866		0.16	0.16	1.32	1.06	0.26	99	99	85	2.02	1.5	90	0.014	102	101	221.7	0.06	0.89	15.40	105.11	179.17	173.46	73.81	178.92	143	84	85	85		1.001	7.428	782
216	35.233	35.029		0.16	0.16	1.32	1.06	0.26	99	99	85	2.01	1.5	90	0.015	98	98	221.9	-0.15	0.97	15.45	104.88	178.97	173.24	73.84	178.72	143	84	85	85		1.001	8.077	848
217	35.396	35.192		0.16	0.16	1.32	1.06	0.26	99	99	85	2	1.5	89	0.014	102	101	221.9	-0.03	0.99	15.40	104.62	178.80	173.09	73.93	178.55	142	84	85	85		1.001	8.239	863
218	35.560	35.355		0.16	0.16	1.32	1.06	0.26	99	99	85	2.02	1.5	89	0.014	102	101	221.9	0.01	1.01	15.47	104.41	178.60	172.92	73.93	178.34	141	84	85	85		1.001	8.404	878
219	35.723	35.517		0.16	0.16	1.33	1.05	0.26	99	99	85	2.01	1.5	89	0.015	98	97	221.8	0.09	0.93	15.39	104.20	178.42	172.75	73.96	178.17	141	84	85	85		1.001	7.754	809
220	35.886	35.680		0.16	0.16	1.32	1.05	0.26	99	99	85	2	1.5	89	0.013	106	105	221.9	-0.04	0.99	15.36	104.01	178.27	172.60	74.00	178.01	140	85	85	85		1.001	8.236	858
221	36.049	35.842		0.16	0.16	1.33	1.05	0.26	99	99	85	2.02	1.5	89	0.013	106	105	221.9	-0.08	0.95	15.39	103.72	178.04	172.40	74.06	177.77	140	85	85	85		1.001	7.912	822
222	36.212	36.006		0.16	0.16	1.33	1.05	0.26	99	99	85	2.01	1.5	89	0.013	106	106	221.9	0.06	0.92	15.43	103.45	177.86	172.27	74.16	177.61	139	85	85	85		1.001	7.611	788
223	36.375	36.169		0.16	0.16	1.33	1.05	0.26	99	99	85	2.02	1.5	89	0.015	98	98	221.9	0.02	0.95	15.35	103.31	177.67	172.06	74.11	177.42	139	85	85	85		1.001	7.913	818
224	36.538	36.331		0.16	0.16	1.32	1.06	0.26	99	99	85	2.01	1.5	89	0.015	98	97	222.0	-0.10	0.99	15.47	103.16	177.49	171.93	74.09	177.24	138	85	85	85		1.001	8.250	852
225	36.701	36.494		0.16	0.16	1.32	1.06	0.26	99	99	85	2	1.5	89	0.013	106	105	221.9	0.08	0.95	15.35	102.89	177.27	171.71	74.12	177.01	138	85	85	85		1.001	7.916	815
226	36.865	36.657		0.16	0.16	1.33	1.06	0.26	99	99	85	2.02	1.5	89	0.014	102	101	221.8	0.12	0.91	15.50	102.69	177.08	171.57	74.15	176.84	137	85	85	85		1.001	7.592	780
227	37.028	36.821		0.16	0.16	1.32	1.05	0.26	99	99	85	2.02	1.5	89	0.013	106	106	222.0	-0.24	0.97	15.52	102.49	176.92	171.32	74.18	176.67	137	85	85	85		1.001	8.076	829
228	37.191	36.983		0.16	0.16	1.32	1.05	0.26	99	99	85	2.01	1.5	89	0.015	98	97	221.9	0.11	0.99	15.46	102.32	176.71	171.14	74.14	176.46	136	85	85	85		1.001	8.241	844
229	37.355	37.145		0.16	0.16	1.32	1.06	0.26	99	99	85	2.02	1.5	89	0.014	102	101	221.9	0.03	0.91	15.38	102.15	176.54	170.99	74.14	176.29	136	85	85	85		1.001	7.590	776
230	37.519	37.308		0.16	0.16	1.32	1.06	0.26	99	99	85	2	1.5	89	0.015	99	98	221.9	-0.08	0.97	15.40	101.94	176.36	170.83	74.14	176.09	135	85	85	85		1.001	8.075	824
231	37.682	37.471		0.16	0.16	1.33	1.06	0.26	99	99	85	2.02	1.5	89	0.013	106	105	221.8	0.12	0.97	15.42	101.74	176.13	170.68	74.16	175.89	135	85	85	85		1.001	8.096	825
232	37.845	37.635		0.16	0.16	1.32	1.06	0.26	99	99	85	2.02	1.5	89	0.014	102	102	221.9	-0.04	0.97	15.50	101.47	175.95	170.43	74.19	175.66	134	86	85	85		1.001	8.077	821
233	38.009	37.797		0.16	0.16	1.33	1.05	0.26	99	99	85	2.02	1.5	89	0.013	106	105	222.0	-0.10	0.93	15.49	101.31	175.71	170.20	74.17	175.48	134	86	85	85		1.001	7.753	786
234	38.172	37.959		0.16	0.16	1.33	1.05	0.26	99	99	85	2.01	1.5	89	0.015	98	97	221.9	0.07	1.50	15.52	101.13	175.54	166.55	74.07	175.20	133	86	85	85		1.001	12.442	1260
235	38.334	38.122		0.16	0.16	1.33	1.06	0.26	99	99	85	2	1.5	89	0.015	98	98	221.8	0.05	1.52	15.36	101.08	175.37	166.12	73.94	175.02	138	86	85	85		1.001	12.601	1275

Elapsed Time	Particulate Sampling Data																	Fuel Weight, lb		Flow, gpm		Temperature Data, oF									Stack			
	Gas Meter Cubic Feet (1)	Gas Meter Cubic Feet (2)	Gas Meter Cubic Feet (amb)	Sample Rate, cfm (1)	Sample Rate, cfm (2)	Orifice dH (1)	Orifice dH (2)	Orifice dH (amb)	Meter oF (1)	Meter oF (2)	Meter oF (amb)	Meter Vac. In. Hg. (1)	Meter Vac. In. Hg. (2)	Dilution Tunnel Temp.	Dilution Tunnel dP	Pro. Rate (%) (1)	Pro. Rate (%) (2)	Scale Reading	Weight Change	Load Side Liquid Flow Rate	Boiler Side Liquid Flow Rate (optional)	Thermopile ΔT	Boiler to Heat Exch. Temp.	Heat Exch to Boiler Temp.	Inlet Load Temp.	Outlet Load Temp.	Stack	Filter (1)	Filter (2)	Ambient	Draft In. H2O	Specific Heat of Inlet Water (BTU/lb-°F)	Mass Flow Rate of Inlet Water (lb/min)	Heat Output, Btu
236	38.497	38.285		0.16	0.16	1.32	1.05	0.26	99	99	85	2.03	1.5	99	0.017	93	93	221.6	0.24	1.55	15.38	101.01	175.11	165.96	73.76	174.77	158	87	85	85		1.001	12.927	1307
237	38.660	38.448		0.16	0.16	1.33	1.06	0.26	99	99	85	2.02	1.5	91	0.014	102	102	221.5	0.16	1.54	15.37	100.65	174.85	165.66	73.84	174.49	151	86	85	85		1.001	12.766	1286
238	38.824	38.610		0.16	0.16	1.33	1.05	0.26	99	99	85	2.02	1.5	90	0.014	102	101	221.4	0.00	1.53	15.41	100.50	174.56	165.43	73.70	174.20	146	86	85	85		1.001	12.762	1284
239	38.987	38.773		0.16	0.16	1.33	1.06	0.26	99	99	85	2.02	1.5	89	0.013	106	105	221.4	0.04	1.57	15.48	100.35	174.27	165.17	73.56	173.92	142	86	85	85		1.001	13.087	1315
240	39.150	38.936		0.16	0.16	1.33	1.06	0.26	99	99	85	2.02	1.5	89	0.016	95	95	221.5	-0.05	1.55	15.40	100.07	173.93	164.80	73.50	173.57	140	86	85	85		1.001	12.927	1295
241	39.314	39.100		0.16	0.16	1.32	1.06	0.26	99	99	85	2.02	1.5	89	0.015	99	99	221.3	0.13	1.44	15.45	99.80	173.55	164.81	73.41	173.21	138	86	85	85		1.001	11.960	1195
242	39.477	39.263		0.16	0.16	1.32	1.06	0.26	99	99	85	2.02	1.5	89	0.015	98	98	221.4	-0.07	1.09	15.39	99.58	173.27	166.08	73.33	172.91	136	86	85	85		1.001	9.048	902
243	39.641	39.425		0.16	0.16	1.32	1.06	0.26	99	99	85	2.01	1.5	89	0.012	111	109	221.5	-0.12	1.07	15.42	99.30	172.86	166.78	73.37	172.68	135	86	85	85		1.001	8.888	884
244	39.804	39.588		0.16	0.16	1.32	1.06	0.26	99	99	85	2.01	1.5	89	0.015	98	98	221.5	0.03	1.07	15.50	98.85	172.54	166.45	73.47	172.32	134	86	85	85		1.001	8.891	880
245	39.967	39.751		0.16	0.16	1.32	1.06	0.26	99	99	85	2	1.5	89	0.013	106	105	221.3	0.15	1.11	15.40	98.50	172.23	166.15	73.53	172.03	133	86	85	85		1.001	9.211	908
246	40.131	39.915		0.16	0.16	1.33	1.06	0.26	99	99	85	2	1.5	89	0.014	102	102	221.5	-0.14	1.05	15.37	98.16	171.90	165.89	73.53	171.69	132	86	85	85		1.001	8.727	858
247	40.294	40.078		0.16	0.16	1.32	1.06	0.26	99	99	84	2	1.5	89	0.015	98	98	221.4	0.08	1.13	15.51	97.89	171.63	165.62	73.51	171.39	131	86	85	84		1.001	9.376	919
248	40.457	40.240		0.16	0.16	1.33	1.06	0.26	99	99	84	2.01	1.5	89	0.015	98	97	221.4	-0.02	1.03	15.43	97.63	171.29	165.34	73.48	171.11	131	86	85	84		1.001	8.566	837
249	40.620	40.403		0.16	0.16	1.33	1.06	0.26	99	99	85	2.01	1.5	88	0.014	102	101	221.5	-0.11	1.07	15.49	97.47	171.12	165.20	73.46	170.93	130	86	85	85		1.001	8.891	868
250	40.783	40.566		0.16	0.16	1.32	1.06	0.26	99	99	84	2	1.5	88	0.014	102	101	221.6	-0.09	1.09	15.39	97.17	170.80	164.86	73.41	170.58	130	86	85	84		1.001	9.053	881
251	40.947	40.730		0.16	0.16	1.33	1.06	0.26	99	99	84	2	1.5	88	0.014	102	102	221.6	0.01	1.07	15.32	97.03	170.56	164.65	73.29	170.33	129	86	85	84		1.001	8.894	864
252	41.110	40.893		0.16	0.16	1.33	1.06	0.26	99	99	84	2.02	1.5	88	0.013	105	105	221.5	0.12	1.13	15.44	96.92	170.38	164.49	73.22	170.14	129	85	85	84		1.001	9.376	910
253	41.273	41.056		0.16	0.16	1.33	1.06	0.26	99	99	84	2	1.5	88	0.014	102	101	221.6	-0.06	1.03	15.39	96.66	170.06	164.18	73.16	169.82	128	83	85	84		1.001	8.573	830
254	41.437	41.219		0.16	0.16	1.32	1.06	0.26	99	99	85	2.01	1.5	88	0.012	110	109	221.5	0.12	1.11	15.40	96.44	169.91	163.99	73.21	169.65	128	82	85	85		1.001	9.213	890
255	41.600	41.382		0.16	0.16	1.32	1.06	0.26	99	99	84	2.01	1.5	88	0.012	110	109	221.5	-0.08	1.15	15.34	96.20	169.61	163.71	73.20	169.40	127	80	85	84		1.001	9.535	918
256	41.764	41.546		0.16	0.16	1.32	1.06	0.26	99	99	85	2.01	1.5	88	0.015	99	98	221.6	-0.12	1.09	15.51	95.95	169.41	163.47	73.22	169.17	127	80	84	85		1.001	9.098	874
257	41.928	41.709		0.16	0.16	1.32	1.06	0.26	99	99	85	2	1.5	89	0.013	106	105	221.4	0.22	1.10	15.43	95.72	169.17	163.29	73.21	168.93	126	79	84	85		1.001	9.165	878
258	42.091	41.871		0.16	0.16	1.33	1.06	0.26	99	99	85	2.01	1.5	88	0.014	102	101	221.5	-0.08	1.09	15.37	95.55	169.04	163.14	73.22	168.77	126	79	84	85		1.001	9.077	868
259	42.255	42.034		0.16	0.16	1.32	1.06	0.26	99	99	85	2.01	1.5	88	0.014	102	101	221.5	-0.02	1.09	15.44	95.17	168.73	162.88	73.33	168.50	126	79	84	85		1.001	9.050	862
260	42.418	42.197		0.16	0.16	1.33	1.06	0.26	99	99	85	2.01	1.5	88	0.014	102	101	221.6	-0.04	1.09	15.46	94.94	168.60	162.76	73.39	168.33	126	79	84	85		1.001	9.050	860
261	42.581	42.361		0.16	0.16	1.32	1.06	0.26	99	99	84	1.99	1.5	88	0.014	102	102	221.6	-0.02	1.07	15.42	94.66	168.31	162.47	73.42	168.08	125	79	84	84		1.001	8.888	842
262	42.744	42.524		0.16	0.16	1.33	1.06	0.26	99	99	84	2.01	1.5	88	0.014	102	101	221.6	0.02	1.03	15.46	94.32	168.00	162.16	73.44	167.76	124	79	84	84		1.001	8.567	809
263	42.907	42.687		0.16	0.16	1.33	1.06	0.26	99	99	85	2	1.5	88	0.013	105	105	221.5	0.02	1.07	15.43	94.02	167.79	161.98	73.52	167.54	124	79	84	85		1.001	8.889	837
264	43.070	42.850		0.16	0.16	1.32	1.06	0.26	99	99	85	2.01	1.5	88	0.013	105	105	221.6	-0.02	1.11	15.51	93.75	167.57	161.75	73.57	167.32	124	79	84	85		1.001	9.213	865
265	43.233	43.013		0.16	0.16	1.32	1.06	0.26	99	99	85	2.01	1.5	88	0.013	105	105	221.6	-0.04	1.05	15.37	93.53	167.36	161.61	73.61	167.14	124	79	84	85		1.001	8.732	818
266	43.396	43.177		0.16	0.16	1.32	1.06	0.26	99	99	85	2	1.5	88	0.014	102	102	221.6	0.04	1.14	15.45	93.27	167.16	161.39	73.64	166.91	139	79	84	85		1.001	9.507	888
267	43.559	43.339		0.16	0.16	1.32	1.05	0.26	99	99	85	2	1.5	95	0.014	102	101	221.3	0.29	1.06	15.47	92.94	166.87	161.09	73.70	166.64	146	80	84	85		1.001	8.856	824
268	43.722	43.501		0.16	0.16	1.32	1.06	0.26	99	99	85	2	1.5	90	0.015	98	97	221.3	-0.03	1.09	15.45	92.62	166.62	160.84	73.75	166.37	141	80	84	85		1.001	9.078	842
269	43.886	43.664		0.16	0.16	1.32	1.07	0.26	99	99	85	2.01	1.5	89	0.013	106	105	221.2	0.12	1.11	15.44	92.36	166.32	160.62	73.74	166.10	137	80	84	85		1.001	9.214	852
270	44.049	43.828		0.16	0.16	1.32	1.06	0.26	99	99	85	2.01	1.5	89	0.013	106	106	221.3	-0.10	1.03	15.46	92.14	166.12	160.33	73.75	165.89	134	80	84	85		1.001	8.566	790
271	44.213	43.991		0.16	0.16	1.32	1.06	0.26	99	99	85	2	1.5	88	0.013	106	105	221.3	0.02	1.20	15.48	91.84	165.86	160.11	73.78	165.62	131.71385	80	84	85		1.001	10.018	921
272	44.376	44.154		0.16	0.16	1.32	1.06	0.26	99	99	85	2.02	1.5	88	0.014	102	101	221.1	0.14	1.13	15.45	91.65	165.62	159.92	73.75	165.40	129.84035	80	84	85		1.001	9.373	860
273	44.539	44.317		0.16	0.16	1.32	1.06	0.26	99	99	85	2.01	1.5	88	0.016	95	95	221.2	-0.10	1.11	15.44	91.46	165.41	159.78	73.73	165.19	129	80	84	85		1.001	9.211	843
274	44.702	44.480		0.16	0.16	1.32	1.06	0.26	99	99	85	2.01	1.5	88	0.013	105	105	221.2	0.00	1.11	15.44	91.24	165.20	159.53	73.69	164.92	127	80	85	85		1.001	9.209	841
275	44.865	44.643		0.16	0.16	1.32	1.06	0.26	99	99	85	2.01	1.5	88	0.015	98	98	221.4	-0.15	1.13	15.37	91.13	165.01	159.41	73.65	164.78	126	80	84	85		1.001	9.370	855
276	45.028	44.807		0.16	0.16	1.33	1.06	0.26	99	99	84	2.01	1.5	88	0.014	102	102	221.3	0.09	1.05	15.38	90.89	164.73	159.13	73.63	164.53	126	80	84	84		1.001	8.735	795
277	45.191	44.970		0.16	0.16	1.32	1.06	0.26	99	99	84	2	1.5	88	0.014	102	101	221.3	-0.01	1.09	15.45	90.68	164.55	158.95	73.58	164.26	125	80	85	84		1.001	9.089	825
278	45.354	45.132		0.16	0.16	1.32	1.06	0.26	99	99	84	2	1.5	88	0.013	105	104	221.3	-0.07	1.11	15.39	90.55	164.31	158.70	73.55	164.09	124	80	85	84		1.001	9.215	835
279	45.517	45.295		0.16	0.16	1.32	1.06	0.26	99	99	85	2	1.5	88	0.014	102	101	221.3	0.05	1.14	15.39	90.36	164.10	158.58	73.52	163.88	123	80	85	85		1.001	9.513	861
280	45.680	45.459		0.16	0.16	1.33	1.06	0.26	99	99	84	2	1.5	88	0.013	105	106	221.3	-0.01	1.11	15.46	90.19	163.93	158.37	73.50	163.70	123	80	85	84		1.001	9.211	832
281	45.843	45.622		0.16	0.16	1.32	1.06	0.26	99	99	85	2.01	1.5	88	0.013	105	105	221.3	-0.03	1.13	15.42	89.93	163.68	158.06	73.48	163.41	123	80	84	85		1.001	9.372	844
282	46.007	45.785		0.16	0.16	1.32	1.06	0.26	99	99	84	2.01	1.5	88	0.014	102	101	221.2	0.10	1.09	15.37	89.77	163.47	157.89	73.47	163.24	122	80	84	84		1.001	9.052	813
283	46.170	45.948		0.16	0.16	1.32	1.06	0.26	99	99	84	2.01	1.5	88	0.014	102	101	221.3	-0.01	1.15	15.41	89.55	163.24	157.69	73.46	163.01	122	81	84	84		1.001	9.534	855
284	46.334	46.111		0.16	0.16	1.32	1.06	0.26	99	99	84	2	1.5	88	0.014	102	101	221.3	0.00	1.15	15.45	89.33	163.00	157.50	73.45	162.78	122	80	84	84		1.001	9.540	853
285	46.497	46.274		0.16	0.16	1.32	1.07	0.26	99	99	85	2	1.5	88	0.016	95	95	221.2	0.09	1.11	15.45	89.04	162.73	157.25	73.44	162.49	121	79	84	85		1.001	9.214	821
286	46.660	46.438		0.16	0.16	1.33	1.06	0.26	99	99	84	2.01	1.5	88	0.013	105	106	221.3	-0.14	1.13	15.43	88.88	162.58	157.16	73.44	162.33	121	79	84	84		1.001	9.380	835
287	46.823	46.601		0.16	0.16	1.32	1.06	0.26	99	99	84	2	1.5	88	0.013	105	105	221.2	0.10	1.05	15.44	88.64	162.30	156.87	73.44	162.08	120	78	84	84		1.001	8.730	775
288	46.987	46.764		0.16	0.16	1.33	1.06	0.26	99	99	84	1.99	1.5	88	0.014	102	101	221.2	-0.01	1.02	15.44	88.51	162.11	156.95	73.41	161.92	124	78	84	84		1.001	8.501	753
289	47.149	46.927		0.16	0.16	1.31	1.05	0.26	99	99	84	2.03	1.5	96	0.015	98	99	220.8	0.42	1.10	15.43	88.21	161.89	156.45	73.45	161.66	148	79	84	84		1.001	9.145	808
290	47.312	47.089		0.16	0.16	1.32	1.05	0.26	99	99	84	2.01	1.5	98	0.013	106	105	220.6	0.19	1.07	15.36	87.98	161.66	156.29	73.46	161.44	158	79	84	84		1.001	8.889	783
291	47.474	47.253		0.16	0.16	1.32	1.05	0.26	99	99	84	2.03	1.5	99	0.012	110	111	220.2	0.39	1.13	15.44	87.75	161.42	156.05	73.46	161.21	165	79	84	84		1.001	9.375	824
292	47.637	47.415		0.16	0.16	1.32	1.05	0.26	99	99	84	2.03	1.5	100	0.016	96	95	219.8	0.41	1.09	15.47	87.48	161.22	155.83	73.49	160.97	173	79	84	84		1.001	9.052	793
293	47.799	47.577		0.16	0.16	1.32	1.05	0.26	99	99	84	2.02	1.5	101	0.015	99	98	219.4	0.44	1.05	15.41	87.36	161.04	155.65	73.46	160.83	181	79	84	84		1.001	8.729	763
294	47.962	47.739		0.16	0.16	1.32	1.06	0.26	99	99	85	2.02	1.5	103	0.013	107	106	218.6	0.75	1.07	15.41	87.32	161.00	155.61	73.43	160.75	189	79	84	85		1.001	8.889	777
295	48.125	47.902		0.16	0.16	1.33	1.06	0.26	99	99	84	2.02	1.5	104	0.014	103	103	218.0	0.63	1.11	15.47	87.26	161.02	155.53	73.47	160.73	196	80	84	84		1.001	9.212	805
296	48.287	48.065		0.16	0.16	1.32	1.06	0.26	99	98	84	2.03	1.5	106	0.014	103	103	217.4	0.59	1.07	15.41	87.43	161.21	155.71	73.50	160.93	205	81	84	84		1.001	8.890	778
297	48.450	48.226		0.16	0.16	1.32	1.06	0.26	99	98	84	2.03	1.5	109	0.012	112	110	216.6	0.80	1.07	15.48	87.71	161.46	155.91	73.44	161.15	215	81	84	84		1.001	8.908	782

Elapsed Time	Particulate Sampling Data																	Fuel Weight, lb		Flow, gpm		Temperature Data, oF									Stack			
	Gas Meter Cubic Feet (1)	Gas Meter Cubic Feet (2)	Gas Meter Cubic Feet (amb)	Sample Rate, cfm (1)	Sample Rate, cfm (2)	Orifice dH (1)	Orifice dH (2)	Orifice dH (amb)	Meter oF (1)	Meter oF (2)	Meter oF (amb)	Meter Vac. In. Hg. (1)	Meter Vac. In. Hg. (2)	Dilution Tunnel Temp.	Dilution Tunnel dP	Pro. Rate (%) (1)	Pro. Rate (%) (2)	Scale Reading	Weight Change	Load Side Liquid Flow Rate	Boiler Side Liquid Flow Rate (optional)	Thermopile ΔT	Boiler to Heat Exch. Temp.	Heat Exch to Boiler Temp.	Inlet Load Temp.	Outlet Load Temp.	Stack	Filter (1)	Filter (2)	Ambient	Draft In. H2O	Specific Heat of Inlet Water (BTU/lb-°F)	Mass Flow Rate of Inlet Water (lb/min)	Heat Output, Btu
298	48.612	48.388		0.16	0.16	1.32	1.06	0.26	99	98	84	2.02	1.5	112	0.016	97	96	215.7	0.90	1.11	15.38	88.09	161.87	156.30	73.40	161.49	225	82	84	84		1.001	9.266	817
299	48.775	48.550		0.16	0.16	1.32	1.06	0.26	99	98	84	2.04	1.5	114	0.017	94	94	214.9	0.83	1.08	15.53	88.63	162.34	156.79	73.33	161.96	234	83	84	84		1.001	8.996	798
300	48.937	48.713		0.16	0.16	1.32	1.05	0.26	99	98	84	2.05	1.5	117	0.015	100	101	214.0	0.87	1.03	15.39	89.28	162.92	157.36	73.29	162.57	242	84	84	84		1.001	8.566	766
301	49.099	48.874		0.16	0.16	1.32	1.06	0.26	99	98	84	2.06	1.5	118	0.014	104	103	213.1	0.95	1.15	15.51	89.92	163.54	157.91	73.26	163.18	249	85	84	84		1.001	9.537	859
302	49.261	49.035		0.16	0.16	1.32	1.06	0.26	99	98	84	2.06	1.5	120	0.015	100	100	212.3	0.77	1.09	15.39	90.62	164.23	158.55	73.24	163.86	254	86	84	84		1.001	9.048	821
303	49.422	49.197		0.16	0.16	1.31	1.06	0.26	99	98	84	2.05	1.5	121	0.014	103	104	211.4	0.87	1.11	15.45	91.54	165.15	159.38	73.17	164.70	258	86	84	84		1.001	9.215	844
304	49.584	49.359		0.16	0.16	1.32	1.05	0.26	99	98	84	2.06	1.5	122	0.015	101	100	210.4	0.99	1.11	15.40	92.26	165.91	160.13	73.25	165.51	261	87	84	84		1.001	9.210	851
305	49.745	49.520		0.16	0.16	1.31	1.05	0.26	99	98	84	2.06	1.5	123	0.015	100	100	209.4	1.05	1.11	15.43	93.02	166.66	160.74	73.25	166.26	266	87	84	84		1.001	9.210	858
306	49.907	49.680		0.16	0.16	1.32	1.05	0.26	99	98	84	2.07	1.5	124	0.016	98	96	208.6	0.74	1.11	15.50	94.12	167.75	161.75	73.18	167.29	269	88	84	84		1.001	9.212	868
307	50.068	49.842		0.16	0.16	1.31	1.05	0.26	99	98	84	2.05	1.6	126	0.015	100	101	207.5	1.16	1.13	15.42	94.90	168.47	162.45	73.14	168.04	272	88	84	84		1.001	9.366	890
308	50.230	50.002		0.16	0.16	1.31	1.04	0.26	99	98	84	2.08	1.6	125	0.013	108	107	206.7	0.76	1.07	15.39	95.72	169.41	163.35	73.26	168.97	272	89	84	84		1.001	8.873	850
309	50.391	50.162		0.16	0.16	1.31	1.05	0.26	99	98	84	2.06	1.6	125	0.016	97	96	205.9	0.78	1.07	15.45	96.81	170.52	164.38	73.25	170.06	273	89	84	84		1.001	8.894	862
310	50.552	50.323		0.16	0.16	1.31	1.04	0.26	99	98	84	2.07	1.6	126	0.015	100	100	204.8	1.12	1.06	15.51	97.82	171.49	165.33	73.25	171.06	275	89	84	84		1.001	8.837	865
311	50.713	50.483		0.16	0.16	1.31	1.03	0.26	99	98	84	2.06	1.6	126	0.014	104	103	203.8	1.03	1.03	15.41	98.65	172.34	166.15	73.27	171.92	276	89	84	84		1.001	8.564	846
312	50.875	50.644		0.16	0.16	1.32	1.06	0.26	99	98	84	2.09	1.6	126	0.015	101	100	203.2	0.63	1.09	15.42	99.67	173.41	167.14	73.31	172.98	277	89	84	84		1.001	9.052	903
313	51.037	50.807		0.16	0.16	1.32	1.07	0.26	99	98	84	2.09	1.6	125	0.014	104	105	201.8	1.36	1.09	15.38	100.42	174.23	167.88	73.36	173.79	276	89	84	84		1.001	9.051	910
314	51.199	50.970		0.16	0.16	1.32	1.07	0.26	99	98	84	2.08	1.6	125	0.014	104	105	201.7	0.15	1.13	15.51	101.42	175.25	168.89	73.38	174.80	275	89	84	84		1.001	9.373	952
315	51.361	51.132		0.16	0.16	1.32	1.07	0.26	99	98	84	2.07	1.6	125	0.014	104	104	200.6	1.09	1.15	15.40	102.17	176.04	169.56	73.42	175.59	275	90	84	84		1.001	9.534	975
316	51.523	51.293		0.16	0.16	1.31	1.06	0.26	99	98	84	2.1	1.6	126	0.014	104	104	199.9	0.68	1.07	15.48	103.03	176.97	170.43	73.46	176.49	275	90	84	84		1.001	8.887	917
317	51.684	51.455		0.16	0.16	1.31	1.06	0.26	99	98	84	2.11	1.6	126	0.015	100	101	198.7	1.17	1.05	15.43	103.77	177.70	171.16	73.46	177.24	275	90	84	84		1.001	8.731	907
318	51.846	51.618		0.16	0.16	1.31	1.06	0.26	99	98	84	2.09	1.6	124	0.015	101	101	198.0	0.74	1.07	15.44	104.80	178.79	172.20	73.48	178.28	276	90	84	84		1.001	8.894	933
319	52.007	51.780		0.16	0.16	1.31	1.06	0.26	99	98	84	2.11	1.6	126	0.016	97	98	197.1	0.81	1.09	15.39	105.63	179.54	172.94	73.47	179.10	277	90	84	84		1.001	9.093	962
320	52.168	51.941		0.16	0.16	1.31	1.06	0.26	99	98	84	2.12	1.6	124	0.015	100	100	196.6	0.53	1.10	15.41	106.52	180.48	173.79	73.47	179.99	277	90	84	84		1.001	9.128	973
321	52.329	52.103		0.16	0.16	1.31	1.06	0.26	99	98	84	2.11	1.6	124	0.016	97	97	195.6	1.04	1.13	15.34	107.49	181.36	174.68	73.47	180.96	277	90	84	84		1.001	9.370	1008
322	52.490	52.265		0.16	0.16	1.30	1.06	0.26	99	98	84	2.12	1.6	125	0.014	104	104	194.8	0.82	1.11	15.37	108.31	182.18	175.39	73.44	181.76	278	90	84	84		1.001	9.212	999
323	52.651	52.427		0.16	0.16	1.30	1.06	0.26	99	98	84	2.1	1.6	113	0.013	107	107	194.1	0.61	1.11	15.42	109.21	183.08	176.18	73.44	182.65	260	87	84	84		1.001	9.211	1007
324	52.813	52.589		0.16	0.16	1.31	1.06	0.26	99	98	84	2.11	1.6	104	0.015	99	99	193.7	0.39	1.07	15.49	109.88	183.73	176.91	73.45	183.33	243	86	84	84		1.001	8.886	977
325	52.975	52.751		0.16	0.16	1.31	1.05	0.26	99	98	84	2.1	1.6	100	0.015	99	98	193.2	0.52	1.09	15.46	110.08	183.87	177.05	73.45	183.54	232	85	84	84		1.001	9.048	997
326	53.137	52.913		0.16	0.16	1.30	1.04	0.26	99	98	84	2.09	1.6	97	0.014	102	102	193.0	0.27	1.07	15.40	110.23	184.02	177.13	73.44	183.67	224	84	84	84		1.001	8.887	981
327	53.299	53.075		0.16	0.16	1.30	1.04	0.26	99	98	84	2.09	1.6	97	0.015	98	98	192.7	0.27	1.15	15.40	110.35	184.11	177.16	73.41	183.76	218	84	84	84		1.001	9.532	1053
328	53.461	53.236		0.16	0.16	1.31	1.05	0.26	99	98	84	2.09	1.6	95	0.014	102	101	192.5	0.21	1.07	15.48	110.44	184.18	177.25	73.42	183.86	213	84	84	84		1.001	8.881	982
329	53.623	53.398		0.16	0.16	1.31	1.05	0.26	99	98	84	2.08	1.6	94	0.015	98	98	192.4	0.05	1.11	15.41	110.51	184.24	177.30	73.39	183.90	209	84	84	84		1.001	9.195	1017
330	53.785	53.561		0.16	0.16	1.31	1.06	0.26	99	98	84	2.06	1.6	94	0.014	102	102	192.4	0.05	1.13	15.48	110.56	184.27	177.38	73.39	183.95	206	83	84	84		1.001	9.413	1042
331	53.948	53.724		0.16	0.16	1.31	1.06	0.26	99	98	84	2.07	1.6	93	0.014	102	102	192.0	0.35	1.09	15.42	110.52	184.26	177.29	73.42	183.95	202	83	84	84		1.001	9.049	1001
332	54.111	53.887		0.16	0.16	1.31	1.06	0.26	99	98	84	2.05	1.6	92	0.013	106	106	192.0	0.06	1.05	15.46	110.52	184.27	177.32	73.44	183.96	201	82	84	84		1.001	8.724	965
333	54.274	54.050		0.16	0.16	1.31	1.07	0.26	99	98	84	2.04	1.6	91	0.014	102	102	191.9	0.07	1.11	15.35	110.52	184.28	177.37	73.42	183.94	199	81	84	84		1.001	9.211	1019
334	54.437	54.214		0.16	0.16	1.32	1.07	0.26	99	98	84	2.04	1.5	90	0.014	102	102	191.8	0.06	1.09	15.37	110.54	184.26	177.29	73.43	183.96	197	80	84	84		1.001	9.051	1002
335	54.600	54.378		0.16	0.16	1.33	1.08	0.26	99	98	84	2.05	1.5	90	0.014	102	102	191.8	0.01	1.11	15.47	110.57	184.22	177.25	73.34	183.91	195	80	84	84		1.001	9.211	1020
336	54.763	54.543		0.16	0.16	1.33	1.07	0.26	99	98	84	2.03	1.5	90	0.014	102	103	191.6	0.21	1.07	15.36	110.59	184.17	177.31	73.28	183.87	192	80	84	84		1.001	8.892	985
337	54.926	54.707		0.16	0.16	1.33	1.08	0.26	99	98	84	2.05	1.5	90	0.015	98	99	191.8	-0.14	1.11	15.40	110.53	184.04	177.16	73.19	183.72	190	80	84	84		1.001	9.213	1019
338	55.089	54.872		0.16	0.16	1.33	1.08	0.26	99	98	84	2.03	1.5	90	0.013	106	107	191.6	0.13	1.07	15.48	110.50	183.97	177.14	73.15	183.66	188	80	84	84		1.001	8.886	983
339	55.252	55.036		0.16	0.16	1.33	1.08	0.26	99	98	84	2.03	1.5	90	0.016	95	96	191.7	-0.03	1.13	15.48	110.40	183.85	177.07	73.15	183.55	185	79	84	84		1.001	9.372	1036
340	55.416	55.201		0.16	0.16	1.33	1.08	0.26	99	98	84	2.04	1.5	89	0.015	99	99	191.7	-0.05	1.09	15.42	110.28	183.76	176.94	73.18	183.46	183	79	84	84		1.001	9.050	999
341	55.579	55.366		0.16	0.16	1.33	1.09	0.26	99	98	84	2.03	1.5	89	0.016	95	96	191.7	0.00	1.06	15.46	110.17	183.68	177.00	73.19	183.36	181	79	84	84		1.001	8.853	976
342	55.743	55.531		0.16	0.16	1.33	1.09	0.26	99	98	84	2.04	1.5	89	0.016	96	96	191.7	0.05	1.09	15.38	110.10	183.55	176.88	73.16	183.26	179	79	84	84		1.001	9.058	998
343	55.906	55.696		0.16	0.16	1.33	1.08	0.26	99	98	84	2.03	1.5	89	0.014	102	103	191.6	0.03	1.11	15.52	110.02	183.41	176.70	73.11	183.12	177	79	84	84		1.001	9.210	1014
344	56.070	55.861		0.16	0.16	1.33	1.08	0.26	99	98	84	2.04	1.5	89	0.015	99	99	191.5	0.11	1.11	15.40	109.76	183.27	176.50	73.21	182.97	175	80	84	84		1.001	9.213	1012
345	56.232	56.025		0.16	0.16	1.35	1.04	0.26	99	98	84	2.05	1.5	89	0.015	98	99	191.5	0.01	1.09	15.40	109.67	183.15	176.46	73.20	182.86	173	80	84	84		1.001	9.051	994
346	56.398	56.186		0.17	0.16	1.35	1.04	0.26	99	98	84	2.05	1.5	89	0.016	97	94	191.6	-0.06	1.07	15.48	109.55	183.04	176.27	73.20	182.75	172	80	84	84		1.001	8.891	975
347	56.563	56.348		0.16	0.16	1.35	1.04	0.26	99	98	84	2.06	1.5	89	0.015	99	97	191.5	0.03	1.07	15.42	109.40	182.91	176.23	73.21	182.61	170	80	84	84		1.001	8.893	974
348	56.728	56.510		0.16	0.16	1.35	1.04	0.26	99	98	84	2.05	1.5	89	0.015	99	97	191.7	-0.14	1.13	15.40	109.21	182.74	176.05	73.24	182.45	168	81	84	84		1.001	9.375	1025
349	56.892	56.672		0.16	0.16	1.36	1.04	0.26	99	98	84	2.06	1.5	89	0.014	102	101	191.7	0.00	1.05	15.38	109.04	182.60	175.87	73.28	182.32	167	81	84	84		1.001	8.746	955
350	57.056	56.833		0.16	0.16	1.32	1.05	0.26	99	98	84	2.03	1.5	89	0.014	102	100	191.5	0.20	1.10	15.44	108.86	182.48	175.82	73.32	182.18	165	82	84	84		1.001	9.144	997
351	57.219	56.995		0.16	0.16	1.32	1.05	0.26	99	98	84	2.02	1.5	89	0.015	98	97	191.6	-0.08	1.11	15.49	108.65	182.30	175.60	73.35	182.00	164	82	84	84		1.001	9.213	1002
352	57.382	57.158		0.16	0.16	1.32	1.06	0.26	99	98	84	2.04	1.5	89	0.014	102	102	191.5	0.05	1.07	15.35	108.48	182.13	175.48	73.37	181.85	162	82	84	84		1.001	8.891	966
353	57.546	57.321		0.16	0.16	1.32	1.05	0.26	99	98	84	2.03	1.5	88	0.014	102	101	191.5	-0.04	1.11	15.45	108.36	181.99	175.23	73.35	181.70	161	82	84	84		1.001	9.216	1000
354	57.708	57.483		0.16	0.16	1.32	1.05	0.26	99	98	84	2.03	1.5	88	0.014	101	101	191.5	0.02	1.09	15.45	108.16	181.82	175.07	73.36	181.52	160	83	84	84		1.001	9.050	980
355	57.871	57.645		0.16	0.16	1.32	1.05	0.26	99	98	84	2.02	1.5	88	0.013	105	105	191.6	-0.12	1.11	15.39	107.93	181.62	174.84	73.40	181.33	158	83	84	84		1.001	9.213	996
356	58.035	57.808		0.16	0.16	1.32	1.05	0.26	99	98	84	2.04	1.5	88	0.014	102	101	191.6	0.06	1.13	15.50	107.77	181.45	174.74	73.39	181.16	157	83	84	84		1.001	9.376	1012
357	58.198	57.971		0.16	0.16	1.32	1.05	0.26	99	98	84	2.04	1.5	88	0.013	105	105	191.4	0.16	1.11	15.39	107.67	181.28	174.62	73.34	181.01	156	83	84	84		1.001	9.216	993
358	58.361	58.133		0.16	0.16	1.32	1.05	0.26	99	98	84	2.02	1.5	88	0.015	98	97	191.4	-0.01	1.09	15.45	107.38	181.09	174.40	73.40	180.78	155	83	84	84		1.001	9.053	973
359	58.524	58.295		0.16	0.16	1.32	1.05	0.26	99	98	84	2.02	1.5	88	0.014	102	101	191.5	-0.10	1.07	15.36	107.27	180.92	174.26	73.36	180.63	153	83	84	84		1.001	8.891	955

Elapsed Time	Particulate Sampling Data																	Fuel Weight, lb		Flow, gpm		Temperature Data, oF									Stack			
	Gas Meter Cubic Feet (1)	Gas Meter Cubic Feet (2)	Gas Meter Cubic Feet (amb)	Sample Rate, cfm (1)	Sample Rate, cfm (2)	Orifice dH (1)	Orifice dH (2)	Orifice dH (amb)	Meter oF (1)	Meter oF (2)	Meter oF (amb)	Meter Vac. In. Hg. (1)	Meter Vac. In. Hg. (2)	Dilution Tunnel Temp.	Dilution Tunnel dP	Pro. Rate (%) (1)	Pro. Rate (%) (2)	Scale Reading	Weight Change	Load Side Liquid Flow Rate	Boiler Side Liquid Flow Rate (optional)	Thermopile ΔT	Boiler to Heat Exch. Temp.	Heat Exch to Boiler Temp.	Inlet Load Temp.	Outlet Load Temp.	Stack	Filter (1)	Filter (2)	Ambient	Draft In. H2O	Specific Heat of Inlet Water (BTU/lb-°F)	Mass Flow Rate of Inlet Water (lb/min)	Heat Output, Btu
360	58.687	58.458		0.16	0.16	1.32	1.05	0.26	99	98	84	2.02	1.5	88	0.015	98	98	191.4	0.09	1.09	15.41	107.07	180.69	174.06	73.34	180.42	152	84	84	84		1.001	9.053	970
361	58.850	58.621		0.16	0.16	1.32	1.05	0.26	99	98	84	2.04	1.5	88	0.014	102	101	191.3	0.09	1.10	15.49	106.89	180.50	173.89	73.34	180.23	151	84	84	84		1.001	9.149	979
362	59.013	58.783		0.16	0.16	1.32	1.05	0.26	99	98	84	2.03	1.5	88	0.013	105	105	191.6	-0.21	1.11	15.41	106.74	180.33	173.76	73.32	180.06	150	84	84	84		1.001	9.195	983
363	59.175	58.945		0.16	0.16	1.33	1.05	0.26	99	98	84	2.04	1.5	88	0.015	98	97	191.6	-0.01	1.05	15.41	106.54	180.11	173.55	73.31	179.84	149	84	84	84		1.001	8.730	931
364	59.338	59.107		0.16	0.16	1.32	1.05	0.26	99	98	84	2.03	1.5	88	0.015	98	97	191.3	0.25	1.11	15.44	106.38	179.95	173.39	73.30	179.67	148	84	84	84		1.001	9.215	981
365	59.501	59.270		0.16	0.16	1.32	1.05	0.26	99	98	84	2.04	1.5	88	0.014	102	101	191.6	-0.25	1.11	15.40	106.17	179.72	173.14	73.28	179.45	147	84	84	84		1.001	9.214	979
366	59.664	59.433		0.16	0.16	1.32	1.05	0.26	99	98	84	2.04	1.5	88	0.015	98	98	191.5	0.02	1.11	15.38	106.00	179.55	172.98	73.27	179.27	146	84	84	84		1.001	9.215	978
367	59.827	59.595		0.16	0.16	1.32	1.05	0.26	99	98	84	2.02	1.5	88	0.014	102	101	191.5	0.02	1.13	15.41	105.80	179.34	172.79	73.27	179.07	146	84	84	84		1.001	9.376	993
368	59.990	59.757		0.16	0.16	1.32	1.05	0.26	99	98	84	2.03	1.5	88	0.015	98	97	191.4	0.12	1.03	15.43	105.57	179.10	172.62	73.25	178.82	145	84	84	84		1.001	8.571	906
369	60.153	59.920		0.16	0.16	1.32	1.05	0.26	99	98	84	2.04	1.5	88	0.015	98	98	191.6	-0.17	1.13	15.49	105.42	178.95	172.46	73.25	178.67	144	84	84	84		1.001	9.377	990
370	60.316	60.083		0.16	0.16	1.32	1.05	0.26	99	98	84	2.02	1.5	88	0.013	105	105	191.4	0.15	1.07	15.45	105.22	178.75	172.29	73.25	178.46	143	84	84	84		1.001	8.906	938
371	60.479	60.245		0.16	0.16	1.32	1.05	0.26	99	98	84	2.03	1.5	88	0.014	102	101	191.5	-0.04	1.07	15.35	104.98	178.51	171.99	73.27	178.25	143	84	84	84		1.001	8.866	932
372	60.643	60.407		0.16	0.16	1.32	1.05	0.26	99	98	84	2.02	1.5	88	0.016	96	94	191.6	-0.09	1.09	15.43	104.74	178.25	171.80	73.25	177.98	142	84	84	84		1.001	9.026	946
373	60.806	60.569		0.16	0.16	1.31	1.05	0.26	99	98	84	2.02	1.5	88	0.013	105	105	191.5	0.06	1.11	15.44	104.55	178.06	171.58	73.25	177.79	141	84	84	84		1.001	9.216	965
374	60.969	60.732		0.16	0.16	1.32	1.05	0.26	99	98	84	2.04	1.5	87	0.014	102	101	191.5	-0.03	1.11	15.39	104.31	177.87	171.38	73.28	177.60	141	84	84	84		1.001	9.218	963
375	61.132	60.895		0.16	0.16	1.32	1.05	0.26	99	98	84	2.04	1.5	87	0.013	105	105	191.4	0.15	1.11	15.40	104.09	177.65	171.20	73.28	177.37	140	84	84	84		1.001	9.215	960
376	61.295	61.057		0.16	0.16	1.32	1.05	0.26	99	98	84	2.03	1.5	87	0.014	102	101	191.4	-0.06	1.01	15.44	103.88	177.43	171.09	73.27	177.15	139	84	84	84		1.001	8.405	874
377	61.458	61.219		0.16	0.16	1.31	1.06	0.26	99	98	84	2.04	1.5	87	0.017	92	91	191.5	-0.03	1.09	15.47	103.67	177.16	170.79	73.27	176.93	139	84	84	84		1.001	9.057	940
378	61.621	61.381		0.16	0.16	1.32	1.05	0.26	99	98	84	2.02	1.5	87	0.016	95	94	191.6	-0.15	1.05	15.43	103.45	176.99	170.58	73.27	176.73	138	84	84	84		1.001	8.732	904
379	61.783	61.545		0.16	0.16	1.32	1.05	0.26	99	98	84	2.04	1.5	87	0.013	105	106	191.6	0.01	1.09	15.53	103.22	176.73	170.34	73.28	176.50	137	84	84	84		1.001	9.054	936
380	61.946	61.707		0.16	0.16	1.33	1.05	0.26	99	98	84	2.02	1.5	87	0.016	95	94	191.7	-0.07	1.13	15.38	103.03	176.55	170.20	73.25	176.28	137	84	84	84		1.001	9.376	967
381	62.109	61.869		0.16	0.16	1.32	1.05	0.26	99	98	84	2.02	1.5	87	0.013	105	105	191.6	0.09	1.08	15.45	102.80	176.29	169.97	73.26	176.06	136	84	84	84		1.001	8.940	920
382	62.272	62.031		0.16	0.16	1.32	1.06	0.26	99	98	83	2.03	1.5	87	0.016	95	94	191.4	0.13	1.12	15.42	102.57	176.15	169.82	73.29	175.86	136	85	84	83		1.001	9.317	957
383	62.435	62.194		0.16	0.16	1.32	1.06	0.26	99	98	84	2.02	1.5	87	0.015	98	98	191.6	-0.11	1.17	15.44	102.37	175.92	169.60	73.29	175.66	135	85	84	84		1.001	9.707	995
384	62.598	62.357		0.16	0.16	1.32	1.05	0.26	99	98	84	2.02	1.5	87	0.016	95	95	191.5	0.05	1.17	15.42	102.16	175.68	169.41	73.27	175.43	135	85	84	84		1.001	9.705	993
385	62.761	62.519		0.16	0.16	1.32	1.05	0.26	99	98	84	2.03	1.5	87	0.015	98	97	191.5	0.06	1.13	15.41	101.94	175.48	169.20	73.28	175.23	134	85	84	84		1.001	9.379	957
386	62.924	62.681		0.16	0.16	1.32	1.06	0.26	99	98	84	2.04	1.5	87	0.015	98	97	191.6	-0.11	0.68	15.42	101.58	175.23	171.30	73.38	174.96	134	85	84	84		1.001	5.654	575
387	63.087	62.843		0.16	0.16	1.32	1.05	0.26	99	98	84	2.02	1.5	87	0.016	95	94	191.5	0.06	0.74	15.42	101.28	174.88	171.02	73.38	174.66	133	84	84	84		1.001	6.138	622
388	63.250	63.007		0.16	0.16	1.32	1.05	0.26	99	98	84	2.02	1.5	87	0.014	102	102	191.5	0.02	0.72	15.43	101.05	174.76	170.92	73.48	174.53	133	85	84	84		1.001	5.977	605
389	63.414	63.169		0.16	0.16	1.32	1.05	0.26	99	98	83	2.04	1.5	87	0.014	102	101	191.5	-0.01	0.70	15.38	100.76	174.58	170.79	73.59	174.35	133	85	84	83		1.001	5.816	587
390	63.577	63.331		0.16	0.16	1.32	1.05	0.26	99	98	84	2.03	1.5	87	0.013	105	105	191.5	-0.01	0.78	15.52	100.56	174.40	170.58	73.59	174.15	132	84	84	84		1.001	6.455	650
391	63.740	63.493		0.16	0.16	1.32	1.06	0.26	99	98	84	2.04	1.5	87	0.015	98	97	191.5	0.04	0.64	15.46	100.25	174.22	170.39	73.68	173.92	132	85	84	84		1.001	5.331	535
392	63.903	63.656		0.16	0.16	1.32	1.04	0.26	99	98	84	2.04	1.5	90	0.014	102	102	191.3	0.16	0.70	15.57	100.07	174.12	170.35	73.78	173.85	155	85	83	84		1.001	5.791	580
393	64.066	63.818		0.16	0.16	1.33	1.05	0.26	99	98	83	2.03	1.5	92	0.014	102	101	191.0	0.35	0.72	15.42	99.94	173.91	170.18	73.72	173.66	155	85	83	83		1.001	5.976	598
394	64.229	63.981		0.16	0.16	1.33	1.06	0.26	99	98	83	2.03	1.5	88	0.014	102	101	190.9	0.07	0.66	15.50	99.71	173.79	170.04	73.81	173.52	149	84	83	83		1.001	5.488	548
395	64.391	64.143		0.16	0.16	1.32	1.06	0.26	99	98	83	2.02	1.5	87	0.012	109	109	191.0	-0.10	0.70	15.38	99.53	173.68	170.00	73.91	173.44	145	85	83	83		1.001	5.815	579
396	64.554	64.306		0.16	0.16	1.33	1.06	0.26	99	98	83	2.02	1.5	87	0.013	105	105	190.9	0.07	0.68	15.45	99.32	173.51	169.81	73.94	173.26	142	85	83	83		1.001	5.652	562
397	64.718	64.469		0.16	0.16	1.33	1.06	0.26	99	98	84	2.01	1.5	87	0.016	96	95	191.0	-0.07	0.72	15.45	99.24	173.41	169.73	73.90	173.14	140	85	83	84		1.001	5.976	594
398	64.881	64.632		0.16	0.16	1.33	1.05	0.26	99	97	84	2.02	1.5	87	0.013	105	105	191.0	-0.05	0.76	15.43	99.05	173.26	169.56	73.96	173.02	138	84	83	84		1.001	6.306	625
399	65.044	64.794		0.16	0.16	1.33	1.06	0.26	99	98	83	2.02	1.5	87	0.015	98	97	190.9	0.14	0.70	15.40	98.91	173.18	169.52	74.03	172.94	136	84	83	83		1.001	5.813	576
400	65.207	64.957		0.16	0.16	1.33	1.06	0.26	99	97	83	2.01	1.5	87	0.014	102	102	190.9	0.04	0.68	15.49	98.73	173.06	169.41	74.07	172.80	134	84	83	83		1.001	5.642	558
401	65.371	65.120		0.16	0.16	1.32	1.06	0.26	99	97	83	2.02	1.5	87	0.014	102	102	190.9	0.02	0.73	15.43	98.50	172.90	169.22	74.11	172.62	133	84	83	83		1.001	6.047	596
402	65.534	65.283		0.16	0.16	1.32	1.06	0.26	98	97	83	2.02	1.5	87	0.013	106	105	191.0	-0.17	0.62	15.43	98.44	172.82	169.14	74.15	172.59	132	84	83	83		1.001	5.169	509
403	65.697	65.446		0.16	0.16	1.32	1.06	0.26	98	97	83	2.03	1.5	87	0.013	106	105	191.0	0.04	0.62	15.50	98.27	172.68	169.01	74.18	172.45	131	84	83	83		1.001	5.167	508
404	65.861	65.608		0.16	0.16	1.32	1.06	0.26	99	97	83	2.02	1.5	87	0.016	96	94	191.0	0.03	0.68	15.40	98.07	172.56	168.88	74.19	172.26	130	84	83	83		1.001	5.655	555
405	66.024	65.771		0.16	0.16	1.32	1.06	0.26	98	97	83	2.03	1.5	86	0.015	98	98	191.0	-0.10	0.74	15.42	97.93	172.42	168.74	74.27	172.20	130	84	83	83		1.001	6.144	602
406	66.188	65.935		0.16	0.16	1.33	1.06	0.26	98	97	83	2.03	1.5	87	0.013	106	106	191.0	0.02	0.70	15.52	97.81	172.32	168.65	74.27	172.08	129	84	83	83		1.001	5.817	570
407	66.351	66.098		0.16	0.16	1.32	1.06	0.26	98	97	83	2.03	1.5	87	0.013	106	105	191.0	0.04	0.68	15.36	97.63	172.21	168.54	74.32	171.95	129	84	83	83		1.001	5.653	553
408	66.514	66.260		0.16	0.16	1.33	1.06	0.26	98	97	83	2.02	1.5	87	0.015	98	97	191.0	-0.03	1.07	15.45	97.50	172.02	166.39	74.26	171.76	128	84	83	83		1.001	8.898	869
409	66.676	66.423		0.16	0.16	1.33	1.06	0.26	98	97	83	2.01	1.5	86	0.014	101	101	190.9	0.11	1.10	15.42	97.43	171.95	166.14	74.29	171.72	128	84	83	83		1.001	9.178	895
410	66.839	66.586		0.16	0.16	1.33	1.06	0.26	98	97	83	2.03	1.5	86	0.014	102	101	191.1	-0.21	1.07	15.44	97.37	171.81	165.98	74.21	171.58	127	84	83	83		1.001	8.894	867
411	67.003	66.749		0.16	0.16	1.32	1.06	0.26	98	97	83	2.01	1.5	86	0.014	102	101	191.1	0.04	1.07	15.52	97.24	171.64	165.81	74.17	171.41	127	84	83	83		1.001	8.899	866
412	67.166	66.912		0.16	0.16	1.33	1.06	0.26	98	97	83	2.02	1.5	86	0.013	105	105	190.9	0.15	0.99	15.37	97.08	171.46	165.57	74.13	171.21	126	84	83	83		1.001	8.249	802
413	67.329	67.074		0.16	0.16	1.33	1.06	0.26	98	97	83	2.02	1.5	86	0.015	98	97	191.0	-0.08	1.07	15.45	96.89	171.30	165.48	74.16	171.05	126	84	83	83		1.001	8.894	863
414	67.493	67.237		0.16	0.16	1.32	1.06	0.26	98	97	83	2.01	1.5	86	0.014	102	101	190.9	0.07	1.07	15.44	96.65	171.10	165.28	74.20	170.85	126	84	83	83		1.001	8.896	861
415	67.656	67.400		0.16	0.16	1.32	1.06	0.26	98	97	83	2.03	1.5	86	0.012	110	110	191.0	-0.10	1.05	15.43	96.52	170.91	165.14	74.15	170.67	125	84	83	83		1.001	8.736	844
416	67.819	67.564		0.16	0.16	1.32	1.06	0.26	98	97	83	2.03	1.5	86	0.013	105	106	191.0	0.06	1.05	15.35	96.34	170.71	164.91	74.12	170.46	125	84	83	83		1.001	8.732	842
417	67.983	67.726		0.16	0.16	1.32	1.06	0.26	98	97	83	2.01	1.5	86	0.014	102	101	191.0	-0.04	1.01	15.38	96.15	170.47	164.82	74.09	170.24	125	84	83	83		1.001	8.411	810
418	68.146	67.889		0.16	0.16	1.32	1.06	0.26	98	97	83	2.03	1.5	86	0.014	102	101	190.9	0.09	1.11	15.38	95.93	170.25	164.49	74.08	170.01	125	84	83	83		1.001	9.216	885
419	68.309	68.051		0.16	0.16	1.33	1.06	0.26	98	97	83	2.03	1.5	86	0.013	105	105	190.9	-0.02	1.07	15.48	95.72	170.02	164.21	74.05	169.77	124	84	83	83		1.001	8.872	850
420	68.473	68.214		0.16	0.16	1.33	1.06	0.26	98	97	83	2.02	1.5	86	0.014	102	101	191.0	-0.07	1.11	15.44	95.54	169.76	164.02	74.00	169.54	123	84	83	83		1.001	9.219	882
421	68.636	68.378		0.16	0.16	1.33	1.06	0.26	98	97	83	2.01	1.5	86	0.015	98	99	191.1	-0.04	1.13	15.48	95.32	169.51	163.78	73.97	169.28	124	84	83	83		1.001	9.414	898

Elapsed Time	Particulate Sampling Data																	Fuel Weight, lb		Flow, gpm		Temperature Data, oF									Stack			
	Gas Meter Cubic Feet (1)	Gas Meter Cubic Feet (2)	Gas Meter Cubic Feet (amb)	Sample Rate, cfm (1)	Sample Rate, cfm (2)	Orifice dH (1)	Orifice dH (2)	Orifice dH (amb)	Meter oF (1)	Meter oF (2)	Meter oF (amb)	Meter Vac. In. Hg. (1)	Meter Vac. In. Hg. (2)	Dilution Tunnel Temp.	Dilution Tunnel dP	Pro. Rate (%) (1)	Pro. Rate (%) (2)	Scale Reading	Weight Change	Load Side Liquid Flow Rate	Boiler Side Liquid Flow Rate (optional)	Thermopile ΔT	Boiler to Heat Exch. Temp.	Heat Exch to Boiler Temp.	Inlet Load Temp.	Outlet Load Temp.	Stack	Filter (1)	Filter (2)	Ambient	Draft In. H2O	Specific Heat of Inlet Water (BTU/lb-°F)	Mass Flow Rate of Inlet Water (lb/min)	Heat Output, Btu
422	68.799	68.540		0.16	0.16	1.33	1.06	0.26	98	97	83	2.03	1.5	86	0.015	98	97	191.1	-0.09	1.09	15.41	95.18	169.33	163.61	73.89	169.08	123	84	83	83		1.001	9.061	863
423	68.961	68.703		0.16	0.16	1.32	1.05	0.26	98	97	83	2.04	1.5	91	0.013	105	106	190.9	0.28	1.09	15.40	94.96	169.11	163.36	73.92	168.88	147	84	83	83		1.001	9.059	861
424	69.124	68.865		0.16	0.16	1.33	1.06	0.26	98	97	83	2.02	1.5	90	0.012	110	109	190.7	0.15	1.05	15.48	94.75	168.92	163.13	73.91	168.66	145	84	83	83		1.001	8.735	829
425	69.287	69.028		0.16	0.16	1.33	1.06	0.26	98	97	83	2.02	1.5	87	0.013	106	105	190.6	0.07	1.15	15.43	94.51	168.61	162.85	73.87	168.38	140	84	83	83		1.001	9.546	903
426	69.450	69.191		0.16	0.16	1.33	1.06	0.26	98	97	83	2.03	1.5	86	0.013	105	105	190.5	0.10	1.01	15.52	94.37	168.38	162.69	73.77	168.14	137	84	83	83		1.001	8.410	795
427	69.613	69.353		0.16	0.16	1.33	1.05	0.26	98	97	83	2.03	1.5	86	0.014	102	101	190.6	-0.04	1.07	15.52	94.30	168.12	162.43	73.58	167.88	134	84	83	83		1.001	8.897	840
428	69.777	69.515		0.16	0.16	1.32	1.06	0.26	98	97	83	2.03	1.5	86	0.013	106	105	190.7	-0.14	1.03	15.38	94.17	167.89	162.19	73.51	167.68	132	84	83	83		1.001	8.577	809
429	69.940	69.678		0.16	0.16	1.33	1.06	0.26	98	97	83	2.02	1.5	86	0.016	95	95	190.6	0.12	1.05	15.45	94.07	167.68	161.99	73.39	167.46	130	84	83	83		1.001	8.725	822
430	70.103	69.842		0.16	0.16	1.32	1.06	0.26	98	97	83	2.02	1.5	86	0.014	102	102	190.7	-0.10	1.08	15.43	93.98	167.52	161.82	73.30	167.27	129	84	83	83		1.001	8.958	843
431	70.267	70.005		0.16	0.16	1.32	1.06	0.26	98	97	83	2.03	1.5	86	0.014	102	101	190.6	0.04	1.14	15.39	93.83	167.25	161.57	73.19	167.02	127	84	83	83		1.001	9.507	893
432	70.430	70.167		0.16	0.16	1.32	1.06	0.26	98	97	83	2.03	1.5	86	0.015	98	97	190.7	-0.08	1.03	15.51	93.59	167.03	161.40	73.23	166.82	126	84	83	83		1.001	8.575	803
433	70.593	70.330		0.16	0.16	1.32	1.06	0.26	98	97	83	2.03	1.5	86	0.013	105	105	190.7	0.08	1.01	15.42	93.41	166.78	161.17	73.16	166.57	126	84	83	83		1.001	8.412	787
434	70.756	70.492		0.16	0.16	1.33	1.06	0.26	98	97	83	2.03	1.5	86	0.016	95	94	190.7	-0.02	1.05	15.34	93.18	166.58	161.00	73.20	166.38	125	84	83	83		1.001	8.736	815
435	70.920	70.656		0.16	0.16	1.33	1.05	0.26	98	97	83	2.01	1.5	86	0.015	99	99	190.6	0.03	1.07	15.49	92.83	166.35	160.80	73.29	166.12	124	84	83	83		1.001	8.896	827
436	71.083	70.818		0.16	0.16	1.33	1.06	0.26	98	97	83	2.02	1.5	86	0.013	105	105	190.7	-0.05	1.03	15.33	92.64	166.17	160.62	73.29	165.93	123	84	83	83		1.001	8.574	795
437	71.246	70.981		0.16	0.16	1.33	1.06	0.26	98	97	83	2.02	1.5	86	0.014	102	101	190.5	0.19	1.09	15.50	92.43	165.98	160.47	73.32	165.75	123	84	83	83		1.001	9.059	838
438	71.408	71.144		0.16	0.16	1.33	1.06	0.26	98	97	83	2.02	1.5	86	0.014	101	101	190.6	-0.12	1.07	15.50	92.15	165.75	160.19	73.34	165.49	122	84	83	83		1.001	8.899	821
439	71.571	71.307		0.16	0.16	1.33	1.06	0.26	98	97	83	2.02	1.5	86	0.013	105	105	190.7	-0.04	1.05	15.44	91.88	165.44	159.90	73.35	165.23	122	84	83	83		1.001	8.742	804
440	71.735	71.470		0.16	0.16	1.33	1.06	0.26	98	97	83	2.02	1.5	86	0.014	102	101	190.6	0.09	1.04	15.46	91.65	165.26	159.75	73.37	165.02	121	84	83	83		1.001	8.618	791
441	71.898	71.633		0.16	0.16	1.33	1.06	0.26	98	97	83	2.01	1.5	86	0.014	102	101	190.6	-0.03	1.10	15.42	91.38	165.03	159.53	73.41	164.79	120	84	83	83		1.001	9.148	837
442	72.061	71.795		0.16	0.16	1.33	1.06	0.26	98	97	83	2.02	1.5	86	0.014	102	101	190.8	-0.20	1.07	15.46	91.10	164.80	159.32	73.46	164.56	120	84	83	83		1.001	8.901	812
443	72.225	71.958		0.16	0.16	1.33	1.06	0.26	98	97	83	2.03	1.5	86	0.012	110	110	190.7	0.08	1.05	15.41	90.79	164.51	159.01	73.52	164.31	120	84	83	83		1.001	8.738	794
444	72.388	72.121		0.16	0.16	1.33	1.06	0.26	98	97	83	2.03	1.5	86	0.015	98	98	190.8	-0.13	1.11	15.49	90.55	164.33	158.85	73.52	164.07	119	84	83	83		1.001	9.222	836
445	72.551	72.284		0.16	0.16	1.32	1.06	0.26	98	97	83	2.03	1.5	86	0.015	98	98	190.7	0.11	1.07	15.38	90.33	164.12	158.66	73.57	163.90	119	84	83	83		1.001	8.901	805
446	72.715	72.446		0.16	0.16	1.32	1.06	0.26	98	97	83	2.03	1.5	86	0.014	102	101	190.7	-0.01	1.09	15.46	90.11	163.92	158.53	73.59	163.70	119	84	83	83		1.001	9.061	817
447	72.878	72.609		0.16	0.16	1.33	1.06	0.26	98	97	83	2.01	1.5	86	0.014	102	101	190.7	0.06	1.03	15.45	89.89	163.71	158.30	73.59	163.48	118	84	83	83		1.001	8.575	772
448	73.041	72.772		0.16	0.16	1.32	1.06	0.26	98	97	83	2.01	1.5	86	0.015	98	98	190.8	-0.10	1.11	15.41	89.66	163.47	158.11	73.61	163.26	118	84	83	83		1.001	9.223	828
449	73.205	72.936		0.16	0.16	1.33	1.06	0.26	98	97	83	2.03	1.5	86	0.013	106	106	190.7	0.10	1.07	15.47	89.36	163.19	157.85	73.63	162.99	117	84	83	83		1.001	8.890	795
450	73.368	73.098		0.16	0.16	1.32	1.06	0.26	98	97	83	2.02	1.5	86	0.014	102	101	190.7	-0.02	0.99	15.51	89.20	162.99	157.66	73.58	162.78	117	84	83	83		1.001	8.255	737
451	73.530	73.261		0.16	0.16	1.33	1.06	0.26	98	97	83	2.03	1.5	86	0.014	101	101	190.8	-0.08	1.01	15.43	88.97	162.80	157.45	73.60	162.57	117	84	83	83		1.001	8.366	745
452	73.693	73.423		0.16	0.16	1.33	1.06	0.26	98	97	83	2.02	1.5	86	0.013	105	105	190.8	0.02	1.05	15.31	88.74	162.54	157.23	73.58	162.32	117	84	83	83		1.001	8.738	776
453	73.856	73.586		0.16	0.16	1.33	1.06	0.26	98	97	82	2.01	1.5	85	0.015	98	98	190.8	-0.08	1.13	15.41	88.51	162.32	157.04	73.57	162.08	116	84	83	82		1.001	9.387	832
454	74.020	73.750		0.16	0.16	1.32	1.05	0.26	98	96	83	2.05	1.5	93	0.014	103	103	190.5	0.35	1.15	15.46	88.36	162.14	156.87	73.51	161.87	144	84	83	83		1.001	9.548	845
455	74.182	73.911		0.16	0.16	1.33	1.05	0.26	98	96	83	2.03	1.5	96	0.013	106	105	190.2	0.27	1.13	15.40	88.20	161.94	156.70	73.51	161.71	155	84	83	83		1.001	9.383	828
456	74.345	74.073		0.16	0.16	1.32	1.05	0.26	98	96	82	2.04	1.5	97	0.015	99	99	189.8	0.39	1.15	15.49	87.95	161.65	156.42	73.48	161.44	164	84	83	82		1.001	9.549	841
457	74.508	74.235		0.16	0.16	1.33	1.06	0.26	98	96	83	2.03	1.5	98	0.015	99	99	189.4	0.45	1.07	15.44	87.67	161.40	156.17	73.49	161.16	171	84	83	83		1.001	8.901	781
458	74.671	74.398		0.16	0.16	1.33	1.05	0.26	98	96	82	2.02	1.5	99	0.012	111	111	188.9	0.47	1.05	15.39	87.59	161.30	155.99	73.46	161.06	179	84	83	82		1.001	8.737	766
459	74.834	74.560		0.16	0.16	1.32	1.06	0.26	98	96	83	2.04	1.5	100	0.014	103	102	188.3	0.57	1.01	15.42	87.54	161.21	155.93	73.43	160.98	186	85	83	83		1.001	8.415	738
460	74.997	74.722		0.16	0.16	1.32	1.06	0.26	98	96	83	2.04	1.5	101	0.016	96	96	187.8	0.55	1.11	15.49	87.48	161.17	155.87	73.44	160.92	194	85	83	83		1.001	9.192	805
461	75.160	74.884		0.16	0.16	1.33	1.06	0.26	98	96	82	2.03	1.5	104	0.013	107	107	187.3	0.48	1.03	15.49	87.51	161.17	155.89	73.40	160.91	205	85	83	82		1.001	8.569	751
462	75.323	75.047		0.16	0.16	1.33	1.06	0.26	98	96	82	2.03	1.5	107	0.015	100	100	186.6	0.73	1.13	15.48	87.64	161.37	156.06	73.42	161.07	218	85	83	82		1.001	9.372	822
463	75.485	75.209		0.16	0.16	1.32	1.06	0.26	98	96	82	2.03	1.5	109	0.014	103	103	185.8	0.78	1.01	15.47	87.96	161.65	156.29	73.37	161.33	227	85	83	82		1.001	8.413	741
464	75.648	75.370		0.16	0.16	1.33	1.06	0.26	97	96	82	2.05	1.5	112	0.015	101	99	185.1	0.68	1.05	15.49	88.42	162.11	156.72	73.36	161.78	237	86	83	82		1.001	8.737	773
465	75.810	75.532		0.16	0.16	1.33	1.06	0.26	98	96	82	2.05	1.5	114	0.015	100	100	184.3	0.84	1.05	15.50	89.08	162.87	157.48	73.40	162.49	246	86	83	82		1.001	8.738	779
466	75.972	75.694		0.16	0.16	1.33	1.06	0.26	98	96	82	2.06	1.5	117	0.014	104	104	183.5	0.78	1.11	15.41	89.80	163.58	158.13	73.37	163.18	252	87	83	82		1.001	9.223	829
467	76.135	75.856		0.16	0.16	1.33	1.05	0.26	98	96	82	2.07	1.5	118	0.016	98	97	182.6	0.88	1.09	15.47	90.67	164.27	158.83	73.30	163.97	256	87	83	82		1.001	9.062	823
468	76.297	76.016		0.16	0.16	1.33	1.05	0.26	97	96	83	2.07	1.5	119	0.015	101	99	181.7	0.93	1.09	15.48	91.50	165.24	159.68	73.37	164.87	260	88	83	83		1.001	9.063	830
469	76.459	76.177		0.16	0.16	1.33	1.05	0.26	97	96	82	2.06	1.5	120	0.013	108	107	181.0	0.71	1.03	15.41	92.46	166.19	160.58	73.35	165.80	264	88	83	82		1.001	8.575	794
470	76.621	76.339		0.16	0.16	1.32	1.05	0.26	97	96	82	2.06	1.5	121	0.015	101	101	179.8	1.15	1.09	15.43	93.24	167.10	161.35	73.41	166.65	267	88	83	82		1.001	9.051	845
471	76.783	76.499		0.16	0.16	1.32	1.05	0.26	97	96	82	2.08	1.5	121	0.016	98	96	179.1	0.74	1.02	15.47	94.22	168.05	162.35	73.42	167.64	269	89	83	82		1.001	8.469	799
472	76.944	76.660		0.16	0.16	1.32	1.05	0.26	97	96	82	2.07	1.6	120	0.016	97	97	178.2	0.92	1.11	15.41	95.04	168.86	163.01	73.39	168.44	269	89	83	82		1.001	9.265	882
473	77.106	76.821		0.16	0.16	1.32	1.04	0.26	97	96	82	2.08	1.6	120	0.014	104	103	177.3	0.88	1.05	15.36	95.92	169.66	163.84	73.39	169.30	268	89	83	82		1.001	8.740	839
474	77.267	76.981		0.16	0.16	1.32	1.03	0.26	97	96	83	2.08	1.6	121	0.016	97	96	176.6	0.70	1.07	15.49	96.66	170.41	164.43	73.35	170.01	268	90	83	83		1.001	8.898	861
475	77.429	77.141		0.16	0.16	1.32	1.04	0.26	97	96	82	2.09	1.6	120	0.014	104	103	175.4	1.24	1.07	15.53	97.37	171.20	165.25	73.41	170.78	267	89	83	82		1.001	8.900	868
476	77.591	77.302		0.16	0.16	1.32	1.04	0.26	97	96	83	2.08	1.6	119	0.015	101	100	174.6	0.74	1.05	15.39	98.28	172.08	166.07	73.38	171.66	269	88	83	83		1.001	8.737	860
477	77.752	77.462		0.16	0.16	1.31	1.03	0.26	97	96	82	2.1	1.6	120	0.016	97	96	173.8	0.86	1.09	15.46	99.21	172.99	166.89	73.34	172.55	271	87	83	82		1.001	9.062	900
478	77.913	77.621		0.16	0.16	1.31	1.03	0.26	97	96	82	2.08	1.6	122	0.015	100	99	173.0	0.74	1.07	15.46	100.08	173.86	167.75	73.35	173.43	273	88	82	82		1.001	8.901	892
479	78.074	77.781		0.16	0.16	1.31	1.03	0.26	97	96	82	2.09	1.6	121	0.015	100	99	171.9	1.12	1.01	15.42	100.89	174.72	168.54	73.37	174.27	271	87	82	82		1.001	8.413	850
480	78.235	77.941		0.16	0.16	1.31	1.03	0.26	97	96	82	2.09	1.6	120	0.015	100	99	171.3	0.61	1.07	15.42	101.89	175.64	169.41	73.33	175.22	273	87	82	82		1.001	8.894	907
481	78.397	78.100		0.16	0.16	1.31	1.03	0.26	97	96	82	2.1	1.6	120	0.015	101	99	170.0	1.23	0.97	15.45	102.67	176.42	170.36	73.35	176.02	275	87	82	82		1.001	8.091	832
482	78.558	78.262		0.16	0.16	1.31	1.06	0.26	97	96	82	2.1	1.6	122	0.015	100	101	169.5	0.58	1.07	15.38	103.57	177.41	171.09	73.35	176.91	274	88	82	82		1.001	8.939	927
483	78.719	78.424		0.16	0.16	1.31	1.06	0.26	97	96	82	2.11	1.6	121	0.014	104	104	168.3	1.18	1.03	15.44	104.38	178.14	171.78	73.35	177.73	272	87	82	82		1.001	8.579	896

Elapsed Time	Particulate Sampling Data																	Fuel Weight, lb		Flow, gpm		Temperature Data, oF									Stack			
	Gas Meter Cubic Feet (1)	Gas Meter Cubic Feet (2)	Gas Meter Cubic Feet (amb)	Sample Rate, cfm (1)	Sample Rate, cfm (2)	Orifice dH (1)	Orifice dH (2)	Orifice dH (amb)	Meter oF (1)	Meter oF (2)	Meter oF (amb)	Meter Vac. In. Hg. (1)	Meter Vac. In. Hg. (2)	Dilution Tunnel Temp.	Dilution Tunnel dP	Pro. Rate (%) (1)	Pro. Rate (%) (2)	Scale Reading	Weight Change	Load Side Liquid Flow Rate	Boiler Side Liquid Flow Rate (optional)	Thermopile ΔT	Boiler to Heat Exch. Temp.	Heat Exch to Boiler Temp.	Inlet Load Temp.	Outlet Load Temp.	Stack	Filter (1)	Filter (2)	Ambient	Draft In. H2O	Specific Heat of Inlet Water (BTU/lb-°F)	Mass Flow Rate of Inlet Water (lb/min)	Heat Output, Btu
484	78.880	78.586		0.16	0.16	1.30	1.06	0.26	97	96	82	2.1	1.6	120	0.014	104	104	167.4	0.89	1.03	15.41	105.32	179.10	172.67	73.36	178.67	275	87	82	82		1.001	8.577	904
485	79.040	78.747		0.16	0.16	1.30	1.06	0.26	97	96	82	2.12	1.6	121	0.015	100	100	166.8	0.62	1.13	15.44	106.07	179.92	173.38	73.35	179.42	277	88	82	82		1.001	9.386	997
486	79.201	78.909		0.16	0.16	1.30	1.06	0.26	97	96	82	2.1	1.6	122	0.014	104	104	165.7	1.06	1.07	15.39	107.13	180.92	174.47	73.34	180.47	274	88	82	82		1.001	8.903	955
487	79.362	79.071		0.16	0.16	1.29	1.05	0.26	97	96	82	2.11	1.6	121	0.016	97	97	164.8	0.95	1.05	15.37	107.78	181.54	175.03	73.30	181.08	277	88	82	82		1.001	8.738	943
488	79.522	79.232		0.16	0.16	1.30	1.05	0.26	97	96	82	2.11	1.6	109	0.016	95	96	164.2	0.56	1.09	15.40	108.71	182.43	175.81	73.28	181.98	257	85	82	82		1.001	9.062	986
489	79.683	79.393		0.16	0.16	1.29	1.05	0.26	97	96	82	2.11	1.6	101	0.016	95	95	163.7	0.55	1.03	15.44	109.27	183.01	176.38	73.35	182.62	239	84	82	82		1.001	8.576	938
490	79.844	79.556		0.16	0.16	1.29	1.05	0.26	97	96	82	2.09	1.6	96	0.015	98	99	163.4	0.28	1.07	15.40	109.63	183.30	176.62	73.31	182.93	229	83	82	82		1.001	8.900	977
491	80.005	79.718		0.16	0.16	1.29	1.05	0.26	97	96	82	2.1	1.6	94	0.015	98	98	162.6	0.74	1.09	15.46	109.87	183.45	176.88	73.23	183.11	222	82	82	82		1.001	9.053	996
492	80.166	79.880		0.16	0.16	1.30	1.05	0.26	97	96	82	2.09	1.6	94	0.014	101	102	162.7	-0.04	1.03	15.38	109.98	183.47	176.83	73.16	183.14	214	82	82	82		1.001	8.530	939
493	80.327	80.042		0.16	0.16	1.30	1.06	0.26	97	96	82	2.1	1.6	93	0.014	101	102	162.4	0.27	1.09	15.54	110.14	183.65	177.06	73.13	183.28	209	81	82	82		1.001	9.061	999
494	80.489	80.205		0.16	0.16	1.30	1.06	0.26	97	96	82	2.07	1.6	92	0.015	98	99	162.1	0.26	1.09	15.44	110.22	183.69	177.06	73.10	183.32	205	81	82	82		1.001	9.062	1000
495	80.650	80.369		0.16	0.16	1.30	1.06	0.26	97	96	82	2.08	1.6	91	0.014	101	103	162.0	0.16	1.01	15.49	110.39	183.77	177.13	73.04	183.43	201	81	82	82		1.001	8.418	930
496	80.812	80.532		0.16	0.16	1.31	1.06	0.26	97	96	82	2.06	1.6	90	0.015	98	99	161.9	0.03	1.05	15.42	110.50	183.84	177.26	73.01	183.52	199	81	82	82		1.001	8.738	967
497	80.974	80.694		0.16	0.16	1.30	1.07	0.26	97	96	82	2.07	1.6	89	0.016	95	95	161.9	0.08	1.09	15.41	110.50	183.93	177.35	73.09	183.60	197	80	82	82		1.001	9.062	1003
498	81.136	80.858		0.16	0.16	1.30	1.07	0.26	97	96	82	2.07	1.6	88	0.014	101	102	161.7	0.17	1.09	15.42	110.56	183.99	177.33	73.08	183.64	196	79	82	82		1.001	9.063	1003
499	81.299	81.021		0.16	0.16	1.31	1.07	0.26	97	96	82	2.06	1.6	88	0.017	93	92	161.6	0.08	1.03	15.42	110.64	184.03	177.38	73.06	183.70	194	79	82	82		1.001	8.576	950
500	81.461	81.186		0.16	0.17	1.31	1.07	0.26	97	96	82	2.05	1.5	88	0.015	98	100	161.7	-0.09	1.09	15.45	110.60	183.97	177.26	73.04	183.63	191	78	82	82		1.001	9.060	1003
501	81.624	81.350		0.16	0.16	1.31	1.08	0.26	97	96	82	2.04	1.5	88	0.013	106	106	161.6	0.11	1.07	15.43	110.56	183.93	177.25	73.03	183.59	189	77	82	82		1.001	8.890	984
502	81.786	81.514		0.16	0.16	1.31	1.08	0.26	97	96	82	2.05	1.5	87	0.015	98	99	161.5	0.09	1.07	15.48	110.54	183.88	177.27	73.03	183.56	187	77	82	82		1.001	8.867	981
503	81.949	81.678		0.16	0.16	1.32	1.08	0.26	97	96	82	2.04	1.5	87	0.013	106	106	161.5	-0.03	1.03	15.42	110.52	183.82	177.43	72.98	183.50	184	77	82	82		1.001	8.565	948
504	82.111	81.842		0.16	0.16	1.32	1.04	0.26	97	96	82	2.05	1.5	87	0.014	101	102	161.5	0.09	1.07	15.40	110.36	183.70	176.97	73.02	183.38	182	76	82	82		1.001	8.901	983
505	82.274	82.003		0.16	0.16	1.31	1.05	0.26	97	96	82	2.03	1.5	87	0.015	98	97	161.5	-0.08	0.76	15.38	110.23	183.63	178.62	73.07	183.31	180	76	82	82		1.001	6.308	696
506	82.437	82.166		0.16	0.16	1.32	1.04	0.26	97	96	82	2.04	1.5	87	0.014	102	102	161.5	0.06	0.78	15.44	110.11	183.56	178.58	73.11	183.22	178	76	82	82		1.001	6.470	713
507	82.599	82.327		0.16	0.16	1.32	1.04	0.26	97	96	82	2.05	1.5	87	0.016	95	94	161.4	0.04	0.80	15.43	110.02	183.48	178.49	73.16	183.18	176	76	82	82		1.001	6.634	731
508	82.762	82.488		0.16	0.16	1.32	1.05	0.26	97	96	82	2.04	1.5	87	0.013	106	104	161.4	0.02	0.86	15.46	109.86	183.42	178.51	73.27	183.13	174	76	82	82		1.001	7.118	783
509	82.924	82.650		0.16	0.16	1.32	1.05	0.26	97	96	82	2.03	1.5	87	0.015	98	98	161.5	-0.06	0.82	15.46	109.70	183.35	178.48	73.36	183.05	172	76	82	82		1.001	6.797	747
510	83.087	82.812		0.16	0.16	1.32	1.05	0.26	97	96	82	2.05	1.5	87	0.016	95	95	161.5	0.00	0.80	15.38	109.61	183.32	178.45	73.37	182.98	170	76	82	82		1.001	6.634	728
511	83.249	82.973		0.16	0.16	1.32	1.04	0.26	97	96	82	2.03	1.5	87	0.015	98	97	161.4	0.08	0.76	15.44	109.48	183.22	178.46	73.42	182.90	169	76	82	82		1.001	6.300	691
512	83.412	83.135		0.16	0.16	1.32	1.04	0.26	97	96	82	2.05	1.5	86	0.014	102	101	161.4	-0.02	1.32	15.50	109.50	183.21	174.90	73.36	182.86	167	76	82	82		1.001	11.002	1206
513	83.575	83.297		0.16	0.16	1.32	1.05	0.26	97	96	82	2.03	1.5	86	0.014	102	101	161.4	-0.02	1.34	15.40	109.50	183.12	174.58	73.30	182.80	165	77	82	82		1.001	11.152	1223
514	83.738	83.459		0.16	0.16	1.32	1.04	0.26	97	96	82	2.05	1.5	86	0.015	98	98	161.4	0.01	1.11	15.44	109.46	182.97	175.93	73.22	182.68	164	77	82	82		1.001	9.229	1011
515	83.900	83.620		0.16	0.16	1.33	1.04	0.26	97	96	82	2.03	1.5	86	0.014	101	100	161.4	0.04	0.86	15.43	109.38	182.85	177.49	73.20	182.57	162	77	82	82		1.001	7.120	780
516	84.064	83.781		0.16	0.16	1.32	1.05	0.26	97	96	82	2.04	1.5	86	0.015	99	97	161.4	0.03	1.23	15.52	109.25	182.74	175.13	73.21	182.45	161	77	82	82		1.001	10.194	1115
517	84.226	83.944		0.16	0.16	1.32	1.05	0.26	97	96	82	2.05	1.5	86	0.013	105	105	161.5	-0.12	0.88	15.41	109.13	182.67	177.56	73.24	182.37	159	77	82	82		1.001	7.285	796
518	84.389	84.105		0.16	0.16	1.32	1.04	0.26	97	96	82	2.05	1.5	86	0.014	102	100	161.4	0.10	0.86	15.46	109.00	182.50	177.38	73.24	182.24	158	77	82	82		1.001	7.123	777
519	84.552	84.266		0.16	0.16	1.32	1.04	0.26	97	96	82	2.03	1.5	86	0.014	102	100	161.6	-0.22	0.80	15.47	108.85	182.35	177.20	73.22	182.07	156	77	82	82		1.001	6.635	723
520	84.715	84.428		0.16	0.16	1.32	1.05	0.26	97	96	82	2.03	1.5	86	0.015	98	98	161.5	0.08	1.60	15.39	108.73	182.16	171.08	73.02	181.75	155	77	82	82		1.001	13.272	1445
521	84.878	84.590		0.16	0.16	1.32	1.05	0.26	97	96	82	2.05	1.5	86	0.013	106	105	161.4	0.08	1.29	15.48	108.76	182.03	173.31	72.96	181.72	154	77	82	82		1.001	10.688	1164
522	85.040	84.752		0.16	0.16	1.32	1.04	0.26	97	96	82	2.03	1.5	86	0.016	95	94	161.4	0.00	1.30	15.40	108.69	181.82	173.20	72.83	181.52	153	77	82	82		1.001	10.849	1180
523	85.203	84.913		0.16	0.16	1.32	1.04	0.26	97	96	81	2.04	1.5	86	0.014	102	100	161.5	-0.08	0.86	15.45	108.52	181.64	176.31	72.83	181.35	151	77	82	81		1.001	7.131	775
524	85.366	85.074		0.16	0.16	1.32	1.05	0.26	97	96	82	2.05	1.5	86	0.016	95	94	161.6	-0.06	0.86	15.44	108.17	181.46	176.26	73.03	181.20	150	77	82	82		1.001	7.122	771
525	85.529	85.237		0.16	0.16	1.32	1.05	0.26	97	96	82	2.04	1.5	86	0.015	98	98	161.6	0.02	0.86	15.38	107.85	181.24	176.04	73.12	180.97	150	77	82	82		1.001	7.121	769
526	85.692	85.398		0.16	0.16	1.32	1.04	0.26	97	96	82	2.05	1.5	86	0.015	98	97	161.5	0.10	0.86	15.48	107.73	181.13	176.00	73.12	180.85	149	77	82	82		1.001	7.120	768
527	85.854	85.559		0.16	0.16	1.33	1.04	0.26	97	96	82	2.05	1.5	86	0.014	101	100	161.5	-0.06	0.82	15.39	107.50	180.92	175.81	73.12	180.62	148	77	82	82		1.001	6.796	731
528	86.016	85.721		0.16	0.16	1.33	1.05	0.26	97	96	82	2.04	1.5	86	0.015	98	98	161.6	-0.05	0.84	15.34	107.30	180.73	175.77	73.16	180.46	147	77	82	82		1.001	6.957	747
529	86.179	85.883		0.16	0.16	1.32	1.04	0.26	97	96	82	2.05	1.5	85	0.016	95	94	161.6	-0.06	0.88	15.43	107.11	180.62	175.61	73.20	180.31	146	77	82	82		1.001	7.283	781
530	86.342	86.044		0.16	0.16	1.33	1.05	0.26	97	96	82	2.04	1.5	85	0.015	98	97	161.5	0.10	0.86	15.51	106.93	180.45	175.49	73.25	180.19	145	77	82	82		1.001	7.125	763
531	86.505	86.205		0.16	0.16	1.33	1.05	0.26	97	95	82	2.04	1.5	85	0.016	95	94	161.6	-0.12	0.84	15.42	106.72	180.31	175.38	73.28	180.01	144	77	82	82		1.001	6.963	744
532	86.667	86.367		0.16	0.16	1.33	1.05	0.26	97	96	82	2.03	1.5	85	0.015	98	97	161.6	0.05	0.84	15.47	106.58	180.16	175.24	73.30	179.88	143	77	82	82		1.001	6.959	743
533	86.830	86.529		0.16	0.16	1.33	1.04	0.26	97	96	82	2.05	1.5	85	0.015	98	97	161.7	-0.08	0.82	15.40	106.42	180.05	175.15	73.35	179.77	143	77	82	82		1.001	6.801	725
534	86.992	86.690		0.16	0.16	1.33	1.04	0.26	97	96	82	2.03	1.5	85	0.016	95	94	161.5	0.12	0.85	15.53	106.28	179.92	175.03	73.37	179.65	142	77	82	82		1.001	7.101	756
535	87.155	86.852		0.16	0.16	1.32	1.05	0.26	97	96	82	2.05	1.5	85	0.015	98	97	161.5	0.02	0.80	15.47	106.06	179.75	174.82	73.40	179.46	141	77	82	82		1.001	6.635	705
536	87.318	87.014		0.16	0.16	1.32	1.05	0.26	97	96	81	2.04	1.5	85	0.014	102	101	161.6	-0.05	0.78	15.46	105.90	179.65	174.70	73.45	179.35	141	77	82	81		1.001	6.474	686
537	87.481	87.175		0.16	0.16	1.32	1.05	0.26	97	96	81	2.04	1.5	85	0.014	102	100	161.6	0.03	0.84	15.57	105.70	179.47	174.52	73.50	179.19	140	77	82	81		1.001	6.959	736
538	87.644	87.336		0.16	0.16	1.32	1.04	0.26	96	96	82	2.04	1.5	85	0.014	102	100	161.6	-0.08	0.80	15.38	105.56	179.35	174.43	73.52	179.07	140	77	82	82		1.001	6.636	701
539	87.806	87.498		0.16	0.16	1.32	1.04	0.26	96	95	81	2.04	1.5	85	0.016	95	95	161.6	0.03	0.78	15.47	105.38	179.19	174.33	73.53	178.92	139	77	82	81		1.001	6.479	684
540	87.969	87.660		0.16	0.16	1.32	1.04	0.26	96	96	81	2.05	1.5	85	0.013	106	105	161.5	0.09	0.84	15.38	105.25	179.06	174.20	73.52	178.77	138	77	82	81		1.001	6.960	733
541	88.132	87.822		0.16	0.16	1.31	1.04	0.26	96	95	82	2.04	1.5	85	0.015	98	98	161.7	-0.13	0.84	15.44	105.06	178.85	173.99	73.54	178.60	138	77	82	82		1.001	6.961	732
542	88.295	87.983		0.16	0.16	1.32	1.04	0.26	96	96	81	2.04	1.5	85	0.015	98	97	161.7	-0.01	1.08	15.43	105.04	178.74	172.36	73.43	178.48	137	77	82	81		1.001	9.018	948
543	88.458	88.145		0.16	0.16	1.32	1.05	0.26	96	95	81	2.05	1.5	85	0.013	106	105	161.6	0.03	1.06	15.40	104.94	178.60	172.05	73.39	178.32	136	77	82	81		1.001	8.822	927
544	88.620	88.307		0.16	0.16	1.32	1.04	0.26	96	95	81	2.04	1.5	85	0.015	98	98	161.6	-0.01	1.09	15.41	104.82	178.43	171.92	73.34	178.16	136	77	82	81		1.001	9.069	952
545	88.783	88.468		0.16	0.16	1.32	1.04	0.26	96	95	81	2.04	1.5	85	0.016	95	94	161.6	0.01	1.03	15.43	104.70	178.25	171.68	73.30	178.00	135	77	82	81		1.001	8.583	900

Elapsed Time	Particulate Sampling Data																	Fuel Weight, lb		Flow, gpm		Temperature Data, oF									Stack			
	Gas Meter Cubic Feet (1)	Gas Meter Cubic Feet (2)	Gas Meter Cubic Feet (amb)	Sample Rate, cfm (1)	Sample Rate, cfm (2)	Orifice dH (1)	Orifice dH (2)	Orifice dH (amb)	Meter oF (1)	Meter oF (2)	Meter oF (amb)	Meter Vac. In. Hg. (1)	Meter Vac. In. Hg. (2)	Dilution Tunnel Temp.	Dilution Tunnel dP	Pro. Rate (%) (1)	Pro. Rate (%) (2)	Scale Reading	Weight Change	Load Side Liquid Flow Rate	Boiler Side Liquid Flow Rate (optional)	Thermopile ΔT	Boiler to Heat Exch. Temp.	Heat Exch to Boiler Temp.	Inlet Load Temp.	Outlet Load Temp.	Stack	Filter (1)	Filter (2)	Ambient	Draft In. H2O	Specific Heat of Inlet Water (BTU/lb-°F)	Mass Flow Rate of Inlet Water (lb/min)	Heat Output, Btu
546	88.946	88.629		0.16	0.16	1.32	1.04	0.26	96	95	81	2.03	1.5	85	0.014	102	100	161.8	-0.15	1.03	15.39	104.55	178.09	171.57	73.27	177.82	135	77	81	81		1.001	8.583	898
547	89.108	88.790		0.16	0.16	1.32	1.05	0.26	96	95	82	2.04	1.5	85	0.013	105	104	161.6	0.16	1.07	15.44	104.34	177.91	171.35	73.30	177.65	135	77	81	82		1.001	8.905	930
548	89.271	88.953		0.16	0.16	1.33	1.05	0.26	96	95	81	2.05	1.5	85	0.015	98	98	161.7	-0.08	1.07	15.42	104.14	177.70	171.18	73.31	177.45	134	77	81	81		1.001	8.905	928
549	89.433	89.114		0.16	0.16	1.33	1.04	0.26	96	95	82	2.05	1.5	85	0.017	92	91	161.8	-0.10	1.11	15.52	104.04	177.49	171.05	73.21	177.25	133	77	81	82		1.001	9.230	961
550	89.596	89.275		0.16	0.16	1.33	1.05	0.26	96	95	82	2.04	1.5	85	0.014	102	100	161.8	0.01	1.13	15.48	103.72	177.27	170.93	73.30	177.02	132	77	81	82		1.001	9.389	975
551	89.759	89.437		0.16	0.16	1.33	1.05	0.26	96	95	81	2.04	1.5	85	0.016	95	95	161.6	0.21	1.07	15.51	103.54	177.05	170.71	73.26	176.80	132	77	81	81		1.001	8.914	924
552	89.921	89.599		0.16	0.16	1.33	1.05	0.26	96	95	81	2.05	1.5	85	0.015	98	98	161.8	-0.24	1.11	15.43	103.34	176.85	170.51	73.25	176.59	131	77	81	81		1.001	9.210	953
553	90.084	89.760		0.16	0.16	1.33	1.04	0.26	96	95	81	2.03	1.5	85	0.015	98	97	161.7	0.12	1.07	15.48	103.16	176.64	170.29	73.23	176.39	131	77	81	81		1.001	8.907	920
554	90.247	89.921		0.16	0.16	1.33	1.05	0.26	96	95	81	2.04	1.5	85	0.014	102	100	161.8	-0.06	1.07	15.37	102.97	176.42	170.15	73.20	176.17	130	77	81	81		1.001	8.924	920
555	90.410	90.083		0.16	0.16	1.32	1.05	0.26	96	95	82	2.05	1.5	85	0.014	102	101	161.6	0.12	1.11	15.43	102.71	176.15	169.90	73.19	175.89	130	77	81	82		1.001	9.230	949
556	90.573	90.245		0.16	0.16	1.32	1.04	0.26	96	95	81	2.03	1.5	85	0.015	98	98	161.8	-0.13	1.11	15.39	102.47	175.91	169.58	73.18	175.65	130	77	81	81		1.001	9.232	947
557	90.735	90.406		0.16	0.16	1.31	1.03	0.26	96	95	81	2.05	1.5	88	0.016	95	94	161.6	0.21	1.05	15.49	102.30	175.73	169.37	73.17	175.47	154	77	81	81		1.001	8.747	896
558	90.897	90.567		0.16	0.16	1.32	1.04	0.26	96	95	81	2.04	1.5	89	0.013	105	105	161.4	0.12	1.07	15.39	102.04	175.48	169.11	73.19	175.23	154	77	81	81		1.001	8.907	910
559	91.060	90.729		0.16	0.16	1.32	1.04	0.26	96	95	81	2.04	1.5	86	0.016	95	95	161.1	0.36	1.07	15.46	101.76	175.16	168.90	73.17	174.93	148	76	81	81		1.001	8.908	908
560	91.224	90.891		0.16	0.16	1.32	1.04	0.26	96	95	82	2.03	1.5	85	0.014	103	101	161.4	-0.33	1.07	15.38	101.56	174.93	168.69	73.11	174.67	144	76	81	82		1.001	8.912	906
561	91.387	91.052		0.16	0.16	1.32	1.05	0.26	96	95	82	2.03	1.5	85	0.013	106	104	161.3	0.12	1.11	15.43	101.40	174.71	168.48	73.04	174.44	140	76	81	82		1.001	9.226	937
562	91.550	91.214		0.16	0.16	1.33	1.05	0.26	96	95	81	2.03	1.5	85	0.014	102	101	161.3	0.03	1.11	15.39	101.20	174.50	168.37	73.04	174.24	138	75	81	81		1.001	9.225	935
563	91.712	91.377		0.16	0.16	1.33	1.05	0.26	96	95	81	2.04	1.5	85	0.014	101	102	161.2	0.07	1.04	15.48	101.00	174.26	168.09	73.00	174.00	136	75	81	81		1.001	8.614	871
564	91.876	91.538		0.16	0.16	1.33	1.04	0.26	96	95	81	2.04	1.5	85	0.014	103	100	161.3	-0.07	1.05	15.43	100.79	174.02	167.79	72.99	173.78	134	75	81	81		1.001	8.745	882
565	92.039	91.700		0.16	0.16	1.33	1.05	0.26	96	95	81	2.03	1.5	84	0.016	95	94	161.2	0.02	1.11	15.38	100.57	173.78	167.57	72.95	173.52	133	75	81	81		1.001	9.236	930
566	92.201	91.861		0.16	0.16	1.33	1.05	0.26	96	95	81	2.04	1.5	84	0.014	101	100	161.3	-0.05	1.05	15.45	100.38	173.52	167.37	72.92	173.31	131	75	81	81		1.001	8.748	879
567	92.364	92.024		0.16	0.16	1.33	1.05	0.26	96	95	81	2.03	1.5	84	0.015	98	98	161.3	0.00	1.07	15.45	100.18	173.33	167.21	72.90	173.08	130	76	81	81		1.001	8.912	894
568	92.526	92.186		0.16	0.16	1.32	1.04	0.26	96	95	81	2.04	1.5	84	0.014	101	101	161.3	0.01	0.99	15.40	99.88	173.06	166.95	72.93	172.81	129	76	81	81		1.001	8.263	826
569	92.689	92.347		0.16	0.16	1.33	1.05	0.26	96	95	81	2.03	1.5	84	0.015	98	97	161.5	-0.18	1.11	15.47	99.68	172.85	166.81	72.92	172.60	128	76	81	81		1.001	9.235	922
570	92.852	92.509		0.16	0.16	1.33	1.05	0.26	96	95	81	2.04	1.5	84	0.015	98	98	161.3	0.12	1.07	15.42	99.52	172.65	166.64	72.91	172.44	128	76	81	81		1.001	8.912	888
571	93.015	92.672		0.16	0.16	1.33	1.05	0.26	96	95	81	2.04	1.5	84	0.015	98	98	161.3	0.02	1.07	15.45	99.25	172.37	166.33	72.89	172.14	128	76	81	81		1.001	8.912	886
572	93.178	92.833		0.16	0.16	1.33	1.04	0.26	96	95	81	2.03	1.5	84	0.014	102	100	161.3	0.04	1.07	15.41	99.03	172.17	166.12	72.88	171.91	127	76	81	81		1.001	8.917	884
573	93.341	92.995		0.16	0.16	1.33	1.05	0.26	96	95	81	2.05	1.5	84	0.013	106	105	161.4	-0.10	1.06	15.40	98.72	171.89	165.86	72.93	171.65	126	76	81	81		1.001	8.795	869
574	93.504	93.157		0.16	0.16	1.33	1.05	0.26	96	95	81	2.04	1.5	84	0.015	98	98	161.4	-0.04	1.13	15.38	98.45	171.65	165.67	72.95	171.40	126	76	81	81		1.001	9.397	926
575	93.667	93.319		0.16	0.16	1.33	1.04	0.26	96	95	81	2.04	1.5	84	0.014	102	101	161.4	0.02	1.09	15.44	98.25	171.48	165.49	72.98	171.24	125	77	81	81		1.001	9.070	892
576	93.831	93.481		0.16	0.16	1.32	1.04	0.26	96	95	81	2.04	1.5	84	0.015	99	98	161.3	0.10	1.03	15.50	97.98	171.21	165.17	72.98	170.96	124	77	81	81		1.001	8.587	842
577	93.994	93.642		0.16	0.16	1.33	1.05	0.26	96	95	81	2.03	1.5	84	0.013	106	104	161.4	-0.10	1.09	15.51	97.77	170.99	165.03	72.98	170.74	124	77	81	81		1.001	9.070	888
578	94.157	93.804		0.16	0.16	1.32	1.05	0.26	96	95	81	2.03	1.5	84	0.015	98	98	161.4	-0.04	1.03	15.49	97.59	170.78	164.81	72.95	170.54	124	77	81	81		1.001	8.586	839
579	94.319	93.967		0.16	0.16	1.33	1.05	0.26	96	95	81	2.03	1.5	84	0.015	98	98	161.5	-0.08	1.11	15.46	97.25	170.50	164.54	73.01	170.26	124	77	81	81		1.001	9.233	899
580	94.482	94.128		0.16	0.16	1.33	1.05	0.26	96	95	81	2.03	1.5	84	0.014	102	100	161.4	0.12	1.07	15.40	97.11	170.34	164.37	72.98	170.09	123	77	81	81		1.001	8.909	866
581	94.645	94.290		0.16	0.16	1.33	1.05	0.26	96	95	81	2.03	1.5	84	0.015	98	98	161.5	-0.10	1.05	15.53	96.85	170.04	164.18	72.97	169.82	123	77	81	81		1.001	8.742	848
582	94.808	94.452		0.16	0.16	1.33	1.05	0.26	96	95	81	2.03	1.5	84	0.014	102	101	161.4	0.09	1.11	15.39	96.61	169.83	163.98	72.98	169.59	122	77	81	81		1.001	9.219	892
583	94.971	94.614		0.16	0.16	1.32	1.05	0.26	96	95	81	2.04	1.5	84	0.017	92	92	161.3	0.09	1.09	15.41	96.36	169.59	163.65	72.98	169.33	122	77	81	81		1.001	9.074	875
584	95.133	94.776		0.16	0.16	1.33	1.04	0.26	96	95	81	2.03	1.5	84	0.016	95	94	161.3	-0.03	1.06	15.42	96.11	169.32	163.47	72.98	169.09	121	77	81	81		1.001	8.805	847
585	95.296	94.937		0.16	0.16	1.33	1.05	0.26	96	95	81	2.03	1.5	84	0.014	102	100	161.4	-0.06	1.01	15.37	95.94	169.12	163.32	72.96	168.90	121	77	81	81		1.001	8.438	810
586	95.459	95.099		0.16	0.16	1.33	1.05	0.26	96	95	81	2.04	1.5	84	0.013	106	105	161.3	0.05	1.05	15.43	95.71	168.88	163.05	72.95	168.66	121	77	81	81		1.001	8.747	838
587	95.622	95.261		0.16	0.16	1.33	1.05	0.26	96	95	81	2.04	1.5	84	0.013	106	105	161.4	-0.06	1.05	15.47	95.45	168.65	162.78	72.97	168.42	121	77	81	81		1.001	8.747	836
588	95.785	95.423		0.16	0.16	1.32	1.04	0.26	96	95	81	2.05	1.5	89	0.014	102	101	161.2	0.19	1.07	15.43	95.23	168.41	162.61	72.96	168.20	144	78	81	81		1.001	8.912	850
589	95.947	95.583		0.16	0.16	1.33	1.05	0.26	96	95	81	2.04	1.5	87	0.013	105	104	161.1	0.09	1.05	15.47	95.01	168.24	162.46	72.96	167.97	143	77	81	81		1.001	8.751	832
590	96.110	95.745		0.16	0.16	1.33	1.05	0.26	96	95	81	2.03	1.5	85	0.016	95	95	161.1	0.00	1.03	15.42	94.75	167.93	162.13	72.94	167.68	138	77	81	81		1.001	8.588	815
591	96.273	95.908		0.16	0.16	1.33	1.05	0.26	96	95	81	2.03	1.5	84	0.015	98	98	161.1	0.07	1.05	15.43	94.52	167.62	161.88	72.89	167.42	134	77	81	81		1.001	8.753	828
592	96.436	96.069		0.16	0.16	1.32	1.04	0.26	96	95	81	2.02	1.5	84	0.015	98	97	161.2	-0.15	1.09	15.42	94.41	167.44	161.59	72.78	167.20	132	78	81	81		1.001	9.063	857
593	96.598	96.231		0.16	0.16	1.33	1.05	0.26	96	95	81	2.04	1.5	84	0.015	98	98	161.0	0.20	1.11	15.39	94.19	167.19	161.37	72.77	166.96	130	77	81	81		1.001	9.215	869
594	96.762	96.392		0.16	0.16	1.32	1.05	0.26	95	95	81	2.02	1.5	84	0.015	99	97	161.2	-0.14	1.03	15.42	94.02	167.03	161.21	72.74	166.76	128	78	81	81		1.001	8.596	809
595	96.925	96.555		0.16	0.16	1.32	1.04	0.26	96	95	81	2.04	1.5	84	0.015	98	98	161.1	0.04	1.19	15.51	93.70	166.69	160.86	72.75	166.45	126	78	81	81		1.001	9.869	926
596	97.088	96.717		0.16	0.16	1.32	1.04	0.26	95	95	81	2.02	1.5	84	0.014	102	101	161.1	0.00	1.07	15.42	93.51	166.45	160.65	72.71	166.22	125	78	81	81		1.001	8.912	834
597	97.251	96.878		0.16	0.16	1.32	1.05	0.26	95	95	81	2.04	1.5	84	0.015	99	97	161.2	-0.12	1.01	15.44	93.31	166.28	160.52	72.73	166.04	124	78	81	81		1.001	8.426	787
598	97.413	97.040		0.16	0.16	1.33	1.05	0.26	95	95	81	2.02	1.5	84	0.015	98	98	161.2	0.00	1.01	15.44	93.10	166.06	160.32	72.72	165.82	123	78	81	81		1.001	8.426	785
599	97.577	97.203		0.16	0.16	1.33	1.05	0.26	95	95	81	2.04	1.5	84	0.015	99	98	161.1	0.11	1.09	15.41	92.87	165.81	160.11	72.71	165.58	122	78	81	81		1.001	9.076	844
600	97.739	97.364		0.16	0.16	1.33	1.05	0.26	95	95	81	2.03	1.5	84	0.012	109	108	161.1	-0.02	1.09	15.43	92.69	165.62	159.94	72.69	165.38	121	78	81	81		1.001	9.077	842
601	97.902	97.525		0.16	0.16	1.33	1.05	0.26	95	95	81	2.03	1.5	84	0.014	102	100	161.2	-0.07	1.01	15.48	92.49	165.40	159.66	72.66	165.15	120	78	81	81		1.001	8.429	780
602	98.064	97.687		0.16	0.16	1.33	1.05	0.26	95	95	81	2.04	1.5	84	0.015	98	98	161.3	-0.11	1.07	15.36	92.22	165.12	159.42	72.68	164.90	120	78	81	81		1.001	8.911	823
603	98.227	97.850		0.16	0.16	1.33	1.05	0.26	95	95	81	2.04	1.5	83	0.016	95	95	161.2	0.10	1.11	15.47	91.95	164.89	159.19	72.69	164.65	120	78	81	81		1.001	9.224	849
604	98.390	98.011		0.16	0.16	1.33	1.04	0.26	95	95	81	2.02	1.5	84	0.015	99	97	161.3	-0.06	1.09	15.38	91.77	164.65	159.01	72.66	164.43	119	78	81	81		1.001	9.075	834
605	98.553	98.173		0.16	0.16	1.33	1.04	0.26	95	95	81	2.03	1.5	84	0.015	99	98	161.1	0.15	1.12	15.50	91.49	164.40	158.82	72.71	164.20	119	78	81	81		1.001	9.340	855
606	98.716	98.334		0.16	0.16	1.33	1.05	0.26	95	95	81	2.04	1.5	84	0.015	99	97	161.1	0.04	1.11	15.39	91.33	164.27	158.63	72.70	164.03	118	78	81	81		1.001	9.237	845
607	98.878	98.497		0.16	0.16	1.33	1.05	0.26	95	95	81	2.04	1.5	84	0.014	101	102	161.3	-0.18	1.07	15.45	91.02	163.95	158.35	72.71	163.74	117	78	81	81		1.001	8.912	812

Elapsed Time	Particulate Sampling Data																	Fuel Weight, lb		Flow, gpm		Temperature Data, oF									Stack			
	Gas Meter Cubic Feet (1)	Gas Meter Cubic Feet (2)	Gas Meter Cubic Feet (amb)	Sample Rate, cfm (1)	Sample Rate, cfm (2)	Orifice dH (1)	Orifice dH (2)	Orifice dH (amb)	Meter oF (1)	Meter oF (2)	Meter oF (amb)	Meter Vac. In. Hg. (1)	Meter Vac. In. Hg. (2)	Dilution Tunnel Temp.	Dilution Tunnel dP	Pro. Rate (%) (1)	Pro. Rate (%) (2)	Scale Reading	Weight Change	Load Side Liquid Flow Rate	Boiler Side Liquid Flow Rate (optional)	Thermopile ΔT	Boiler to Heat Exch. Temp.	Heat Exch to Boiler Temp.	Inlet Load Temp.	Outlet Load Temp.	Stack	Filter (1)	Filter (2)	Ambient	Draft In. H2O	Specific Heat of Inlet Water (BTU/lb-°F)	Mass Flow Rate of Inlet Water (lb/min)	Heat Output, Btu
608	99.041	98.659		0.16	0.16	1.32	1.05	0.26	95	95	81	2.04	1.5	84	0.014	102	101	161.2	0.09	1.17	15.52	90.78	163.72	158.10	72.70	163.48	117	78	81	81		1.001	9.722	884
609	99.204	98.820		0.16	0.16	1.33	1.05	0.26	95	95	81	2.03	1.5	83	0.013	106	104	161.2	-0.01	1.17	15.44	90.58	163.63	158.02	72.79	163.38	116	78	81	81		1.001	9.720	881
610	99.367	98.982		0.16	0.16	1.33	1.05	0.26	95	95	81	2.03	1.5	83	0.015	98	97	161.2	-0.02	1.03	15.35	90.24	163.27	157.65	72.80	163.04	117	78	81	81		1.001	8.590	776
611	99.530	99.145		0.16	0.16	1.33	1.05	0.26	95	95	80	2.02	1.5	83	0.015	98	98	161.3	-0.05	1.07	15.50	90.08	163.08	157.49	72.79	162.87	116	78	80	80		1.001	8.916	804
612	99.693	99.306		0.16	0.16	1.32	1.04	0.26	95	95	81	2.02	1.5	83	0.014	102	100	161.3	-0.02	1.11	15.38	89.85	162.88	157.34	72.79	162.64	116	78	80	81		1.001	9.239	831
613	99.856	99.468		0.16	0.16	1.32	1.05	0.26	95	95	81	2.03	1.5	83	0.014	102	101	161.3	-0.06	1.11	15.42	89.60	162.60	157.12	72.81	162.41	116	78	81	81		1.001	9.241	829
614	100.019	99.629		0.16	0.16	1.33	1.05	0.26	95	95	81	2.04	1.5	83	0.015	98	97	161.4	-0.05	1.12	15.43	89.45	162.41	156.93	72.77	162.21	115	78	81	81		1.001	9.276	831
615	100.182	99.792		0.16	0.16	1.33	1.05	0.26	95	95	81	2.04	1.5	83	0.014	102	102	161.2	0.19	1.10	15.36	89.17	162.20	156.64	72.80	161.96	132	78	81	81		1.001	9.177	819
616	100.344	99.953		0.16	0.16	1.32	1.04	0.26	95	94	81	2.05	1.5	93	0.014	102	101	161.1	0.08	1.10	15.50	88.98	162.01	156.48	72.78	161.76	148	79	80	81		1.001	9.180	818
617	100.507	100.113		0.16	0.16	1.32	1.04	0.26	95	94	81	2.07	1.5	94	0.015	99	97	160.7	0.39	1.07	15.51	88.76	161.67	156.23	72.72	161.48	155	78	80	81		1.001	8.912	792
618	100.669	100.275		0.16	0.16	1.32	1.04	0.26	95	94	81	2.05	1.5	95	0.013	106	106	160.5	0.23	1.07	15.48	88.48	161.47	156.01	72.76	161.24	160	78	80	81		1.001	8.914	790
619	100.832	100.436		0.16	0.16	1.32	1.04	0.26	95	94	81	2.05	1.5	95	0.016	96	95	160.3	0.24	1.11	15.48	88.25	161.20	155.76	72.72	160.97	165	78	80	81		1.001	9.239	816
620	100.994	100.597		0.16	0.16	1.32	1.05	0.26	95	94	81	2.04	1.5	96	0.015	99	98	160.1	0.20	1.05	15.48	88.12	161.02	155.61	72.69	160.81	170	79	80	81		1.001	8.751	772
621	101.156	100.758		0.16	0.16	1.33	1.05	0.26	95	94	81	2.05	1.5	98	0.016	96	95	159.6	0.46	1.07	15.43	87.98	160.88	155.42	72.68	160.66	179	79	80	81		1.001	8.914	785
622	101.319	100.920		0.16	0.16	1.33	1.05	0.26	95	94	81	2.05	1.5	99	0.013	107	106	159.2	0.44	1.07	15.48	87.85	160.71	155.30	72.65	160.50	187	79	80	81		1.001	8.913	784
623	101.481	101.081		0.16	0.16	1.33	1.05	0.26	95	94	81	2.04	1.5	100	0.015	99	99	158.5	0.63	1.07	15.42	87.90	160.80	155.39	72.63	160.53	196	79	80	81		1.001	8.913	784
624	101.643	101.242		0.16	0.16	1.33	1.05	0.26	95	94	81	2.06	1.5	102	0.015	100	99	158.1	0.46	1.07	15.42	87.95	160.81	155.55	72.62	160.57	206	79	80	81		1.001	8.919	785
625	101.805	101.403		0.16	0.16	1.33	1.05	0.26	95	94	81	2.04	1.5	105	0.014	103	102	157.4	0.64	1.39	15.47	88.00	160.96	154.44	72.62	160.62	215	79	80	81		1.001	11.538	1017
626	101.968	101.565		0.16	0.16	1.33	1.05	0.26	95	94	81	2.06	1.5	106	0.014	104	103	157.0	0.48	1.32	15.49	88.25	161.12	154.30	72.58	160.83	223	80	80	81		1.001	11.019	974
627	102.130	101.726		0.16	0.16	1.33	1.05	0.26	95	94	81	2.06	1.5	109	0.013	108	107	156.4	0.55	1.27	15.43	88.47	161.34	154.47	72.53	161.00	231	80	80	81		1.001	10.533	933
628	102.292	101.887		0.16	0.16	1.33	1.05	0.26	95	94	81	2.06	1.5	111	0.015	100	100	155.7	0.73	1.32	15.41	88.80	161.67	154.83	72.52	161.33	239	80	80	81		1.001	11.018	980
629	102.454	102.048		0.16	0.16	1.33	1.05	0.26	95	94	81	2.07	1.5	113	0.014	104	103	154.9	0.78	1.31	15.42	89.36	162.23	155.23	72.50	161.86	248	81	80	81		1.001	10.879	973
630	102.615	102.208		0.16	0.16	1.32	1.04	0.26	95	94	81	2.07	1.5	115	0.015	100	99	154.2	0.68	1.32	15.45	90.17	163.10	156.07	72.49	162.66	253	82	80	81		1.001	11.018	995
631	102.777	102.367		0.16	0.16	1.32	1.04	0.26	95	94	81	2.08	1.5	116	0.015	101	99	153.3	0.92	1.32	15.44	90.91	163.78	156.66	72.46	163.36	259	82	80	81		1.001	11.016	1003
632	102.938	102.528		0.16	0.16	1.32	1.03	0.26	95	94	80	2.09	1.5	116	0.015	100	100	152.3	0.95	1.27	15.39	91.67	164.51	157.38	72.40	164.07	259	83	80	80		1.001	10.534	967
633	103.099	102.687		0.16	0.16	1.32	1.03	0.26	95	94	80	2.1	1.6	116	0.014	104	102	151.3	1.00	1.31	15.48	92.70	165.51	158.29	72.32	165.02	259	84	80	80		1.001	10.855	1007
634	103.260	102.846		0.16	0.16	1.32	1.03	0.26	95	94	81	2.11	1.6	116	0.015	100	99	150.6	0.73	1.32	15.49	93.83	166.50	159.27	72.23	166.06	260	84	80	81		1.001	11.017	1035
635	103.421	103.006		0.16	0.16	1.32	1.03	0.26	95	94	80	2.11	1.6	117	0.014	104	103	149.8	0.78	1.36	15.47	94.62	167.26	160.01	72.20	166.82	261	85	80	80		1.001	11.342	1074
636	103.582	103.164		0.16	0.16	1.32	1.02	0.26	95	94	80	2.12	1.6	117	0.014	104	102	149.0	0.85	1.27	15.42	95.63	168.26	160.84	72.19	167.81	261	85	80	80		1.001	10.533	1008
637	103.742	103.323		0.16	0.16	1.31	1.02	0.26	95	94	80	2.1	1.6	117	0.014	103	102	148.1	0.92	1.34	15.45	96.41	169.06	161.55	72.20	168.60	262	85	80	80		1.001	11.179	1079
638	103.903	103.483		0.16	0.16	1.34	1.05	0.26	95	94	80	2.14	1.6	117	0.015	100	99	147.4	0.69	1.32	15.41	97.30	169.91	162.39	72.19	169.49	263	86	80	80		1.001	11.018	1073
639	104.065	103.643		0.16	0.16	1.33	1.05	0.26	95	94	80	2.15	1.6	117	0.015	101	99	146.6	0.83	1.29	15.44	98.13	170.69	163.09	72.16	170.28	265	86	80	80		1.001	10.694	1051
640	104.227	103.803		0.16	0.16	1.33	1.04	0.26	95	94	80	2.15	1.6	118	0.015	101	100	145.6	0.95	1.30	15.37	98.89	171.45	163.77	72.13	171.01	268	86	80	80		1.001	10.853	1074
641	104.388	103.963		0.16	0.16	1.33	1.04	0.26	95	94	80	2.15	1.6	119	0.014	104	103	144.7	0.93	1.29	15.47	99.82	172.41	164.66	72.11	171.93	271	87	80	80		1.001	10.692	1069
642	104.549	104.123		0.16	0.16	1.33	1.04	0.26	95	94	80	2.17	1.6	120	0.015	101	100	143.7	0.96	1.29	15.43	100.71	173.28	165.48	72.11	172.82	273	87	80	80		1.001	10.709	1080
643	104.711	104.283		0.16	0.16	1.32	1.04	0.26	95	94	80	2.16	1.7	121	0.015	101	100	142.5	1.19	1.34	15.48	101.52	174.09	166.22	72.08	173.60	274	87	80	80		1.001	11.164	1135
644	104.872	104.443		0.16	0.16	1.32	1.04	0.26	95	94	80	2.18	1.7	121	0.016	97	97	142.2	0.35	1.35	15.43	102.45	174.97	167.05	72.08	174.53	276	87	80	80		1.001	11.253	1154
645	105.033	104.603		0.16	0.16	1.32	1.04	0.26	95	94	80	2.16	1.7	121	0.016	97	97	141.3	0.92	1.31	15.42	103.31	175.84	167.87	72.09	175.40	277	87	80	80		1.001	10.903	1128
646	105.194	104.762		0.16	0.16	1.31	1.04	0.26	95	94	80	2.17	1.7	122	0.015	101	99	140.3	0.99	1.36	15.4131584	104.18	176.74	168.82	72.11	176.30	278	88	80	80		1.001	11.340	1183
647	105.355	104.923		0.16	0.16	1.32	1.03	0.26	95	94	80	2.19	1.7	122	0.016	97	97	139.6	0.66	1.31	15.4896431	105.01	177.63	169.61	72.12	177.13	280	88	80	80		1.001	10.857	1141
648	105.516	105.082		0.16	0.16	1.30	1.03	0.26	95	94	80	2.19	1.7	123	0.016	98	96	138.5	1.08	1.34	15.4132843	105.97	178.58	170.54	72.13	178.11	281	88	80	80		1.001	11.176	1186
649	105.676	105.241		0.16	0.16	1.31	1.03	0.26	95	94	80	2.18	1.7	122	0.015	100	99	137.5	1.06	1.34	15.4409714	106.86	179.53	171.34	72.15	179.01	280	88	80	80		1.001	11.179	1196
650	105.836	105.401		0.16	0.16	1.31	1.03	0.26	95	94	80	2.2	1.7	123	0.016	97	97	136.9	0.54	1.29	15.4319954	107.80	180.36	172.20	72.15	179.95	282	88	80	80		1.001	10.693	1154
651	105.997	105.560		0.16	0.16	1.29	1.03	0.26	95	94	80	2.24	1.7	121	0.015	101	99	136.1	0.84	1.29	15.4625731	108.68	181.30	172.99	72.14	180.82	279	88	80	80		1.001	10.694	1164
652	106.156	105.719		0.16	0.16	1.29	1.04	0.26	95	94	80	2.22	1.7	116	0.015	99	99	135.3	0.79	1.29	15.4268913	109.64	182.29	173.84	72.14	181.79	270	87	80	80		1.001	10.692	1174
653	106.316	105.879		0.16	0.16	1.29	1.02	0.26	95	94	80	2.21	1.7	102	0.015	98	98	134.8	0.55	1.29	15.4585171	110.32	182.85	174.39	72.13	182.45	248	85	80	80		1.001	10.695	1181
654	106.479	106.037		0.16	0.16	1.46	1.02	0.26	95	94	81	2.38	1.7	97	0.016	97	93	134.4	0.34	1.31	15.3219166	110.64	183.12	174.67	72.12	182.76	235	83	80	81		1.001	10.857	1203
655	106.633	106.198		0.15	0.16	1.34	1.05	0.26	95	94	80	2.24	1.8	94	0.015	94	98	134.1	0.33	1.29	15.3749447	110.82	183.28	174.80	72.10	182.92	226	82	80	80		1.001	10.696	1187
656	106.796	106.360		0.16	0.16	1.33	1.05	0.26	95	94	81	2.23	1.8	93	0.015	99	99	133.7	0.35	1.32	15.451335	110.86	183.30	174.79	72.07	182.93	219	82	80	81		1.001	11.014	1222
657	106.959	106.521		0.16	0.16	1.34	1.05	0.26	95	94	80	2.23	1.7	91	0.014	103	101	133.7	0.03	1.32	15.4030104	110.98	183.37	174.87	72.04	183.03	213	81	80	80		1.001	11.019	1224
658	107.122	106.683		0.16	0.16	1.33	1.06	0.26	95	94	80	2.22	1.7	90	0.015	99	98	133.6	0.13	1.33	15.4609938	111.00	183.40	174.83	72.02	183.02	209	81	80	80		1.001	11.027	1225
659	107.285	106.846		0.16	0.16	1.33	1.07	0.26	95	94	80	2.2	1.7	89	0.014	102	102	133.3	0.25	1.32	15.3462124	111.14	183.49	174.95	71.99	183.13	205	81	80	80		1.001	11.003	1224
660	107.448	107.009		0.16	0.16	1.34	1.07	0.26	95	94	80	2.19	1.7	88	0.015	99	99	133.3	-0.02	1.27	15.4223251	111.16	183.47	174.92	71.98	183.13	202	80	80	80		1.001	10.566	1176
661	107.612	107.172		0.16	0.16	1.32	1.06	0.26	95	94	80	2.15	1.7	88	0.014	103	102	133.2	0.15	0.97	15.3886557	111.13	183.45	177.07	71.98	183.11	200	80	80	80		1.001	8.104	902
662	107.775	107.334		0.16	0.16	1.33	1.06	0.26	95	94	80	2.14	1.7	86	0.014	102	101	133.2	0.01	0.96	15.3844099	111.03	183.36	177.11	72.01	183.04	199	79	80	80		1.001	7.945	883
663	107.938	107.497		0.16	0.16	1.34	1.07	0.26	95	94	80	2.15	1.7	86	0.015	99	99	133.2	0.00	1.01	15.3557968	110.98	183.32	177.20	72.05	183.02	197	79	80	80		1.001	8.428	936
664	108.101	107.660		0.16	0.16	1.34	1.07	0.26	95	94	80	2.15	1.7	86	0.016	96	95	133.0	0.20	0.95	15.4795446	110.93	183.29	177.09	72.04	182.98	195	78	80	80		1.001	7.943	882
665	108.264	107.823		0.16	0.16	1.34	1.06	0.26	95	94	80	2.14	1.6	85	0.017	93	92	133.1	-0.08	1.01	15.4699745	110.88	183.22	177.09	72.04	182.92	192	78	80	80		1.001	8.428	936
666	108.427	107.986		0.16	0.16	1.34	1.07	0.26	95	94	80	2.12	1.6	85	0.015	99	98	132.9	0.16	1.01	15.4413385	110.77	183.13	177.00	72.06	182.83	189	78	80	80		1.001	8.428	935
667	108.591	108.149		0.16	0.16	1.34	1.07	0.26	95	94	80	2.11	1.6	85	0.015	99	98	132.9	-0.02	0.99	15.4129219	110.67	183.06	176.95	72.09	182.76	187	77	80	80		1.001	8.267	916
668	108.755	108.313		0.16	0.16	1.35	1.08	0.26	95	94	80	2.11	1.6	85	0.016	96	96	132.8	0.16	0.94	15.4795856	110.56	182.99	177.08	72.12	182.69	185	77	80	80		1.001	7.782	861
669	108.918	108.476		0.16	0.16	1.33	1.08	0.26	95	94	80	2.1	1.6	85	0.015	99	98	132.9	-0.12	0.97	15.3751383	110.47	182.95	176.88	72.16	182.63	182	78	80	80		1.001	8.100	896

Elapsed Time	Particulate Sampling Data																	Fuel Weight, lb		Flow, gpm		Temperature Data, oF									Stack			
	Gas Meter Cubic Feet (1)	Gas Meter Cubic Feet (2)	Gas Meter Cubic Feet (amb)	Sample Rate, cfm (1)	Sample Rate, cfm (2)	Orifice dH (1)	Orifice dH (2)	Orifice dH (amb)	Meter oF (1)	Meter oF (2)	Meter oF (amb)	Meter Vac. In. Hg. (1)	Meter Vac. In. Hg. (2)	Dilution Tunnel Temp.	Dilution Tunnel dP	Pro. Rate (%) (1)	Pro. Rate (%) (2)	Scale Reading	Weight Change	Load Side Liquid Flow Rate	Boiler Side Liquid Flow Rate (optional)	Thermopile ΔT	Boiler to Heat Exch. Temp.	Heat Exch to Boiler Temp.	Inlet Load Temp.	Outlet Load Temp.	Stack	Filter (1)	Filter (2)	Ambient	Draft In. H2O	Specific Heat of Inlet Water (BTU/lb-°F)	Mass Flow Rate of Inlet Water (lb/min)	Heat Output, Btu
670	109.081	108.639		0.16	0.16	1.33	1.05	0.26	95	94	80	2.11	1.5	85	0.017	93	92	132.7	0.13	0.97	15.4874029	110.41	182.86	176.75	72.14	182.55	180	78	80	80		1.001	8.088	894
671	109.244	108.800		0.16	0.16	1.33	1.05	0.26	95	94	80	2.11	1.5	85	0.016	96	94	132.7	0.05	1.04	15.4469118	110.36	182.82	176.75	72.16	182.51	178	78	80	80		1.001	8.670	958
672	109.407	108.962		0.16	0.16	1.33	1.06	0.26	95	94	80	2.1	1.5	85	0.013	106	105	132.8	-0.12	0.95	15.4292011	110.24	182.74	176.63	72.17	182.41	176	78	80	80		1.001	7.873	869
673	109.570	109.124		0.16	0.16	1.33	1.05	0.26	95	94	80	2.1	1.5	84	0.014	102	101	132.9	-0.09	1.01	15.4029922	110.18	182.68	176.63	72.18	182.37	174	78	80	80		1.001	8.431	930
674	109.733	109.287		0.16	0.16	1.33	1.05	0.26	95	94	80	2.1	1.5	85	0.016	96	95	132.8	0.11	0.97	15.4699202	110.03	182.55	176.45	72.23	182.26	172	78	80	80		1.001	8.109	893
675	109.896	109.449		0.16	0.16	1.32	1.05	0.26	95	94	80	2.1	1.5	85	0.013	106	105	132.9	-0.07	0.94	15.4029942	109.94	182.45	176.34	72.21	182.15	170	79	80	80		1.001	7.781	856
676	110.059	109.611		0.16	0.16	1.33	1.06	0.26	95	94	80	2.1	1.5	84	0.015	99	98	132.8	0.05	0.97	15.4913893	109.88	182.36	176.37	72.20	182.08	168	79	80	80		1.001	8.104	892
677	110.222	109.773		0.16	0.16	1.33	1.06	0.26	94	94	80	2.09	1.5	84	0.015	99	98	132.8	0.04	0.97	15.4996958	109.73	182.24	176.24	72.21	181.95	166	79	80	80		1.001	8.108	891
678	110.385	109.936		0.16	0.16	1.33	1.05	0.26	94	94	80	2.08	1.5	84	0.015	99	98	132.7	0.04	0.97	15.4230938	109.65	182.15	176.10	72.22	181.87	165	79	80	80		1.001	8.106	890
679	110.548	110.098		0.16	0.16	1.34	1.05	0.26	94	94	80	2.09	1.5	84	0.014	102	101	132.8	-0.08	0.99	15.3958979	109.51	182.01	175.88	72.23	181.74	163	79	80	80		1.001	8.267	906
680	110.710	110.260		0.16	0.16	1.33	1.05	0.26	94	94	80	2.09	1.5	84	0.015	98	98	132.8	-0.01	0.99	15.4029875	109.38	181.88	175.72	72.23	181.62	162	79	80	80		1.001	8.265	905
681	110.873	110.422		0.16	0.16	1.33	1.06	0.26	94	94	80	2.1	1.5	84	0.014	102	101	132.8	0.00	0.98	15.4411583	109.37	181.81	175.70	72.16	181.54	160	79	80	80		1.001	8.111	888
682	111.035	110.585		0.16	0.16	1.34	1.06	0.26	94	94	80	2.1	1.5	84	0.016	95	95	132.8	-0.01	1.03	15.4225712	109.15	181.62	175.51	72.19	181.34	159	80	80	80		1.001	8.594	939
683	111.198	110.747		0.16	0.16	1.34	1.05	0.26	94	93	80	2.08	1.5	84	0.016	96	95	132.8	0.02	0.97	15.3554764	109.03	181.52	175.52	72.19	181.22	157	80	80	80		1.001	8.099	884
684	111.361	110.909		0.16	0.16	1.33	1.05	0.26	94	93	80	2.08	1.5	84	0.016	96	95	132.9	-0.13	1.07	15.4699879	108.92	181.38	175.37	72.18	181.10	156	80	80	80		1.001	8.903	971
685	111.524	111.071		0.16	0.16	1.33	1.05	0.26	94	94	80	2.1	1.5	84	0.016	96	95	132.8	0.17	0.97	15.3750286	108.73	181.19	175.18	72.19	180.93	155	80	80	80		1.001	8.107	883
686	111.687	111.233		0.16	0.16	1.33	1.06	0.26	94	93	80	2.09	1.5	84	0.015	99	98	132.9	-0.10	0.96	15.4241123	108.59	181.09	175.07	72.23	180.81	153	80	80	80		1.001	7.989	869
687	111.850	111.396		0.16	0.16	1.33	1.05	0.26	94	93	80	2.1	1.5	83	0.015	99	98	132.9	-0.01	0.96	15.4411736	108.45	180.93	174.95	72.20	180.65	152	80	80	80		1.001	8.023	871
688	112.013	111.557		0.16	0.16	1.33	1.05	0.26	94	93	80	2.08	1.5	83	0.015	99	97	132.9	0.02	0.97	15.4513979	108.25	180.79	174.85	72.25	180.50	151	80	80	80		1.001	8.108	879
689	112.176	111.719		0.16	0.16	1.33	1.06	0.26	94	93	80	2.1	1.5	83	0.014	102	101	132.8	0.10	0.99	15.3846169	108.15	180.65	174.67	72.21	180.36	150	80	80	80		1.001	8.270	895
690	112.338	111.882		0.16	0.16	1.33	1.06	0.26	94	93	80	2.1	1.5	83	0.016	95	95	132.9	-0.15	0.97	15.4507809	107.99	180.46	174.50	72.19	180.18	149	80	80	80		1.001	8.109	877
691	112.501	112.044		0.16	0.16	1.32	1.05	0.26	94	93	80	2.08	1.5	84	0.014	102	101	132.8	0.09	0.99	15.4169416	107.86	180.33	174.39	72.20	180.06	148	80	80	80		1.001	8.269	893
692	112.665	112.206		0.16	0.16	1.33	1.06	0.26	94	93	80	2.1	1.5	83	0.016	96	95	132.8	0.00	1.03	15.4136181	107.69	180.16	174.24	72.21	179.90	147	80	80	80		1.001	8.595	927
693	112.827	112.368		0.16	0.16	1.33	1.06	0.26	94	93	80	2.08	1.5	83	0.015	98	98	133.0	-0.20	0.94	15.4601536	107.49	179.97	174.05	72.22	179.70	146	80	80	80		1.001	7.782	837
694	112.990	112.530		0.16	0.16	1.33	1.05	0.26	94	93	80	2.09	1.5	83	0.015	99	98	132.9	0.15	1.01	15.431572	107.31	179.82	173.87	72.24	179.55	145	80	80	80		1.001	8.431	906
695	113.153	112.693		0.16	0.16	1.33	1.05	0.26	94	93	80	2.09	1.5	83	0.016	95	95	132.9	-0.04	0.97	15.4029722	107.09	179.65	173.74	72.28	179.37	144	80	80	80		1.001	8.108	869
696	113.316	112.854		0.16	0.16	1.33	1.05	0.26	94	93	80	2.1	1.5	83	0.014	102	101	132.8	0.11	1.03	15.3915606	106.94	179.48	173.59	72.25	179.19	143	80	80	80		1.001	8.593	920
697	113.479	113.016		0.16	0.16	1.33	1.05	0.26	94	93	80	2.1	1.5	83	0.016	95	95	132.9	-0.07	0.97	15.4515743	106.75	179.32	173.53	72.28	179.03	142	80	80	80		1.001	8.107	866
698	113.641	113.178		0.16	0.16	1.33	1.06	0.26	94	93	80	2.1	1.5	83	0.015	98	98	132.9	0.00	0.98	15.3703632	106.60	179.15	173.33	72.27	178.87	142	80	80	80		1.001	8.110	866
699	113.804	113.341		0.16	0.16	1.33	1.06	0.26	94	93	80	2.1	1.5	83	0.014	102	102	132.8	0.07	0.99	15.5176945	106.39	178.96	173.24	72.28	178.67	141	80	80	80		1.001	8.274	881
700	113.966	113.503		0.16	0.16	1.34	1.05	0.26	94	93	80	2.09	1.5	83	0.014	101	101	133.0	-0.16	1.03	15.5082169	106.21	178.77	173.03	72.30	178.50	141	80	80	80		1.001	8.593	914
701	114.129	113.665		0.16	0.16	1.33	1.06	0.26	94	93	80	2.08	1.5	83	0.016	95	95	133.0	0.01	0.94	15.4610844	106.00	178.60	172.86	72.32	178.32	140	80	80	80		1.001	7.784	826
702	114.292	113.827		0.16	0.16	1.34	1.05	0.26	94	93	80	2.09	1.5	83	0.015	99	98	132.9	0.02	0.97	15.3553772	105.81	178.44	172.92	72.34	178.15	139	80	80	80		1.001	8.106	859
703	114.455	113.990		0.16	0.16	1.34	1.05	0.26	94	93	80	2.09	1.5	83	0.016	95	95	132.9	-0.01	0.99	15.413271	105.59	178.22	172.79	72.38	177.97	138	80	80	80		1.001	8.271	874
704	114.617	114.152		0.16	0.16	1.34	1.05	0.26	94	93	80	2.1	1.5	83	0.015	98	98	133.0	-0.03	1.00	15.4029093	105.47	178.06	172.36	72.34	177.81	138	80	80	80		1.001	8.285	875
705	114.780	114.313		0.16	0.16	1.34	1.06	0.26	94	93	80	2.09	1.5	83	0.015	99	97	132.9	0.09	1.01	15.4130526	105.24	177.87	172.11	72.34	177.58	137	80	80	80		1.001	8.422	887
706	114.943	114.475		0.16	0.16	1.34	1.06	0.26	94	93	80	2.1	1.5	83	0.015	99	98	132.9	-0.01	1.05	15.4223595	105.08	177.69	172.00	72.35	177.43	136	80	80	80		1.001	8.723	918
707	115.106	114.638		0.16	0.16	1.33	1.05	0.26	94	93	80	2.1	1.5	83	0.014	102	102	132.9	-0.03	1.04	15.4357586	104.93	177.52	171.81	72.33	177.26	136	80	80	80		1.001	8.680	912
708	115.269	114.800		0.16	0.16	1.33	1.05	0.26	94	93	80	2.09	1.5	83	0.016	95	95	132.9	-0.01	0.99	15.4895658	104.69	177.30	171.51	72.34	177.03	135	80	80	80		1.001	8.225	862
709	115.432	114.962		0.16	0.16	1.33	1.06	0.26	94	93	80	2.09	1.5	83	0.015	99	98	133.1	-0.17	0.96	15.4892893	104.54	177.11	171.37	72.32	176.86	135	80	80	80		1.001	7.949	832
710	115.595	115.124		0.16	0.16	1.32	1.06	0.26	94	93	80	2.1	1.5	83	0.014	102	101	132.9	0.21	0.99	15.4029455	104.34	176.92	171.20	72.33	176.67	134	80	80	80		1.001	8.274	864
711	115.758	115.287		0.16	0.16	1.33	1.06	0.26	94	93	80	2.1	1.5	83	0.015	99	98	133.0	-0.06	0.97	15.4318533	104.13	176.74	171.13	72.32	176.46	134	80	80	80		1.001	8.108	845
712	115.921	115.449		0.16	0.16	1.33	1.06	0.26	94	93	80	2.1	1.5	83	0.015	99	98	132.9	0.03	1.01	15.4516373	103.96	176.54	170.89	72.33	176.29	133	80	79	80		1.001	8.432	878
713	116.084	115.611		0.16	0.16	1.33	1.05	0.26	94	93	80	2.1	1.5	83	0.013	106	105	132.9	0.04	0.94	15.4326105	103.77	176.34	170.72	72.28	176.05	133	80	79	80		1.001	7.784	809
714	116.246	115.773		0.16	0.16	1.34	1.06	0.26	94	93	80	2.08	1.5	83	0.014	101	101	133.1	-0.20	0.99	15.4661503	103.69	176.14	170.49	72.19	175.87	132	80	79	80		1.001	8.269	858
715	116.410	115.935		0.16	0.16	1.33	1.06	0.26	94	93	80	2.1	1.5	82	0.012	111	109	132.9	0.21	1.01	15.4324799	103.54	175.94	170.27	72.14	175.67	132	80	80	80		1.001	8.434	874
716	116.572	116.098		0.16	0.16	1.34	1.06	0.26	94	93	80	2.1	1.5	82	0.016	95	95	132.9	-0.03	0.98	15.4055595	103.40	175.76	170.14	72.08	175.48	131	80	80	80		1.001	8.111	840
717	116.735	116.260		0.16	0.16	1.33	1.05	0.26	94	93	80	2.09	1.5	82	0.015	99	98	133.0	-0.09	1.01	15.4303122	103.20	175.58	169.96	72.10	175.30	130	80	79	80		1.001	8.435	872
718	116.897	116.421		0.16	0.16	1.34	1.06	0.26	94	93	80	2.09	1.5	83	0.015	98	97	133.0	0.03	0.96	15.4895077	103.04	175.36	169.72	72.04	175.09	130	80	80	80		1.001	7.949	820
719	117.060	116.584		0.16	0.16	1.34	1.06	0.26	94	93	80	2.09	1.5	82	0.014	102	102	132.9	0.03	0.98	15.3934937	102.85	175.17	169.61	72.05	174.90	129	80	79	80		1.001	8.110	835
720	117.222	116.747		0.16	0.16	1.34	1.05	0.26	94	93	79	2.08	1.5	82	0.015	98	98	133.0	-0.08	0.98	15.4896383	102.65	174.95	169.36	72.04	174.69	129	80	79	79		1.001	8.112	834
721	117.385	116.909		0.16	0.16	1.34	1.05	0.26	94	93	79	2.08	1.5	82	0.015	99	98	132.9	0.15	0.99	15.4480085	102.48	174.75	169.22	72.02	174.50	135	80	79	79		1.001	8.270	848
722	117.548	117.070		0.16	0.16	1.33	1.05	0.26	94	93	80	2.13	1.6	91	0.015	99	98	132.5	0.33	0.97	15.4512405	102.23	174.54	168.97	72.05	174.28	155	81	79	80		1.001	8.109	830
723	117.710	117.232		0.16	0.16	1.34	1.08	0.26	94	93	80	2.1	1.6	84	0.016	95	95	132.6	-0.02	0.96	15.4226074	101.97	174.32	168.79	72.07	174.05	149	80	79	80		1.001	7.949	812
724	117.873	117.397		0.16	0.17	1.35	1.08	0.26	94	93	80	2.1	1.6	83	0.015	99	100	132.6	-0.03	0.94	15.4988194	101.78	174.13	168.62	72.08	173.86	144	80	79	80		1.001	7.790	794
725	118.037	117.561		0.16	0.16	1.34	1.06	0.26	94	93	79	2.09	1.5	83	0.016	96	96	132.5	0.09	0.94	15.4515629	101.54	173.94	168.41	72.15	173.69	140	80	79	79		1.001	7.790	792
726	118.200	117.722		0.16	0.16	1.33	1.06	0.26	94	93	79	2.07	1.5	82	0.015	99	97	132.6	-0.13	1.36	15.4318829	101.31	173.79	165.88	72.17	173.48	138	80	79	79		1.001	11.343	1150
727	118.363	117.884		0.16	0.16	1.33	1.06	0.26	94	93	79	2.09	1.5	82	0.015	99	98	132.6	0.07	1.33	15.3934641	101.13	173.53	165.56	72.11	173.24	136	80	79	79		1.001	11.026	1116
728	118.526	118.047		0.16	0.16	1.33	1.06	0.26	94	93	79	2.08	1.5	82	0.015	99	98	132.5	0.08	1.36	15.4040203	100.87	173.30	165.36	72.13	173.01	134	80	79	79		1.001	11.344	1146
729	118.689	118.210		0.16	0.16	1.33	1.06	0.26	94	93	79	2.09	1.5	82	0.014	102	102	132.6	-0.14	1.31	15.4133902	100.56	173.12	165.39	72.27	172.82	133	80	79	79		1.001	10.876	1095
730	118.852	118.372		0.16	0.16	1.33	1.06	0.26	94	93	79	2.09	1.5	82	0.015	99	98	132.6	-0.01	1.33	15.4881849	100.30	172.82	165.16	72.25	172.55	131	80	79	79		1.001	11.022	1107
731	119.015	118.534		0.16	0.16	1.34	1.06	0.26	93	93	79	2.08	1.5	82	0.015	99	98	132.6	0.07	1.38	15.3650408	100.05	172.57	164.94	72.25	172.30	130	80	79	79		1.001	11.498	1152

Elapsed Time	Particulate Sampling Data																	Fuel Weight, lb		Flow, gpm		Temperature Data, oF									Stack			
	Gas Meter Cubic Feet (1)	Gas Meter Cubic Feet (2)	Gas Meter Cubic Feet (amb)	Sample Rate, cfm (1)	Sample Rate, cfm (2)	Orifice dH (1)	Orifice dH (2)	Orifice dH (amb)	Meter oF (1)	Meter oF (2)	Meter oF (amb)	Meter Vac. In. Hg. (1)	Meter Vac. In. Hg. (2)	Dilution Tunnel Temp.	Dilution Tunnel dP	Pro. Rate (%) (1)	Pro. Rate (%) (2)	Scale Reading	Weight Change	Load Side Liquid Flow Rate	Boiler Side Liquid Flow Rate (optional)	Thermopile ΔT	Boiler to Heat Exch. Temp.	Heat Exch to Boiler Temp.	Inlet Load Temp.	Outlet Load Temp.	Stack	Filter (1)	Filter (2)	Ambient	Draft In. H2O	Specific Heat of Inlet Water (BTU/lb-°F)	Mass Flow Rate of Inlet Water (lb/min)	Heat Output, Btu
732	119.178	118.696		0.16	0.16	1.34	1.06	0.26	93	93	79	2.09	1.5	82	0.014	102	101	132.6	-0.06	1.31	15.384243	99.72	172.23	164.65	72.25	171.97	129	80	79	79		1.001	10.882	1086
733	119.341	118.859		0.16	0.16	1.33	1.06	0.26	93	93	79	2.09	1.5	82	0.016	96	95	132.6	-0.01	1.30	15.4056721	99.49	172.02	164.52	72.25	171.74	128	80	79	79		1.001	10.828	1079
734	119.504	119.021		0.16	0.16	1.34	1.06	0.26	93	93	79	2.08	1.5	82	0.015	99	98	132.8	-0.13	1.16	15.4129982	99.23	171.72	165.10	72.23	171.46	127	80	79	79		1.001	9.638	957
735	119.667	119.183		0.16	0.16	1.33	1.06	0.26	93	93	79	2.07	1.5	82	0.014	102	101	132.7	0.10	1.19	15.4701767	98.91	171.42	164.78	72.23	171.14	126	80	79	79		1.001	9.893	980
736	119.829	119.345		0.16	0.16	1.34	1.06	0.26	93	93	79	2.07	1.5	82	0.015	98	98	132.6	0.07	1.19	15.4607754	98.66	171.12	164.53	72.20	170.86	125	80	79	79		1.001	9.893	977
737	119.992	119.508		0.16	0.16	1.34	1.06	0.26	93	93	79	2.08	1.5	82	0.013	106	106	132.6	-0.04	1.19	15.3805227	98.45	170.88	164.29	72.19	170.64	125	80	79	79		1.001	9.894	975
738	120.155	119.671		0.16	0.16	1.34	1.06	0.26	93	93	79	2.09	1.5	82	0.015	99	98	132.7	-0.04	1.17	15.4989204	98.13	170.56	163.96	72.18	170.30	124	80	79	79		1.001	9.739	957
739	120.318	119.833		0.16	0.16	1.34	1.05	0.26	93	93	79	2.08	1.5	82	0.015	99	98	132.6	0.08	1.22	15.4512835	97.94	170.34	163.77	72.14	170.08	124	80	79	79		1.001	10.117	992
740	120.481	119.995		0.16	0.16	1.34	1.06	0.26	93	93	79	2.08	1.5	82	0.015	99	98	132.7	-0.12	0.79	15.4318829	97.72	170.00	164.67	72.04	169.76	123	80	79	79		1.001	6.592	645
741	120.644	120.157		0.16	0.16	1.33	1.06	0.26	93	93	79	2.09	1.5	82	0.013	106	105	132.7	0.04	0.82	15.4021339	97.42	169.75	165.57	72.13	169.55	123	80	79	79		1.001	6.815	665
742	120.808	120.320		0.16	0.16	1.34	1.06	0.26	93	93	79	2.09	1.5	82	0.013	107	106	132.6	0.02	0.80	15.4895191	97.12	169.51	165.34	72.19	169.30	123	80	79	79		1.001	6.652	647
743	120.970	120.482		0.16	0.16	1.34	1.05	0.26	93	93	79	2.09	1.5	82	0.016	95	95	132.5	0.10	0.78	15.3555822	96.82	169.26	165.05	72.19	169.01	122	80	79	79		1.001	6.488	629
744	121.134	120.644		0.16	0.16	1.33	1.06	0.26	93	93	79	2.09	1.5	82	0.014	103	101	132.7	-0.14	0.80	15.4458885	96.66	169.09	164.90	72.21	168.87	121	80	79	79		1.001	6.652	644
745	121.297	120.807		0.16	0.16	1.33	1.06	0.26	93	93	79	2.09	1.5	82	0.017	93	92	132.6	0.12	1.11	15.4509764	96.55	168.94	163.08	72.13	168.67	121	80	79	79		1.001	9.246	894
746	121.460	120.970		0.16	0.16	1.33	1.06	0.26	93	93	79	2.09	1.5	82	0.014	102	102	132.7	-0.17	1.05	15.3751163	96.36	168.69	162.85	72.10	168.45	121	80	79	79		1.001	8.762	845
747	121.623	121.132		0.16	0.16	1.34	1.06	0.26	93	93	79	2.09	1.5	82	0.015	99	98	132.7	0.06	1.05	15.4220734	96.20	168.48	162.65	72.05	168.26	121	80	79	79		1.001	8.761	844
748	121.786	121.294		0.16	0.16	1.34	1.06	0.26	93	92	79	2.09	1.5	82	0.016	96	95	132.6	0.05	1.13	15.3842678	96.03	168.31	162.53	72.04	168.07	121	80	79	79		1.001	9.409	905
749	121.949	121.456		0.16	0.16	1.34	1.06	0.26	93	92	79	2.09	1.5	82	0.017	93	92	132.6	0.00	1.11	15.3748255	95.77	168.10	162.11	72.04	167.81	121	80	79	79		1.001	9.245	886
750	122.112	121.619		0.16	0.16	1.34	1.06	0.26	93	92	79	2.08	1.5	81	0.015	99	98	132.7	-0.11	1.05	15.4476976	95.50	167.82	161.99	72.11	167.61	120	80	79	79		1.001	8.761	838
751	122.275	121.782		0.16	0.16	1.34	1.06	0.26	93	92	79	2.08	1.5	82	0.015	99	99	132.7	0.09	1.07	15.4795475	95.36	167.70	161.81	72.07	167.43	120	80	79	79		1.001	8.923	852
752	122.437	121.944		0.16	0.16	1.34	1.06	0.26	93	92	79	2.08	1.5	82	0.014	102	101	132.7	-0.04	1.11	15.4787874	95.20	167.50	161.61	72.06	167.25	138	80	79	79		1.001	9.246	881
753	122.599	122.105		0.16	0.16	1.32	1.05	0.26	93	92	79	2.11	1.6	87	0.017	93	92	132.6	0.11	1.09	15.4051628	94.91	167.21	161.36	72.07	166.97	144	80	79	79		1.001	9.087	863
754	122.761	122.267		0.16	0.16	1.33	1.06	0.26	93	92	79	2.08	1.5	83	0.014	102	101	132.5	0.05	1.09	15.4699421	94.68	166.98	161.21	72.08	166.76	138	80	79	79		1.001	9.080	861
755	122.924	122.430		0.16	0.16	1.33	1.06	0.26	93	92	79	2.07	1.5	82	0.014	102	102	132.5	0.00	1.09	15.4132528	94.43	166.73	160.92	72.08	166.51	134	80	79	79		1.001	9.086	859
756	123.086	122.593		0.16	0.16	1.33	1.06	0.26	93	92	79	2.09	1.5	82	0.016	95	95	132.5	0.07	1.11	15.4606915	94.11	166.49	160.64	72.13	166.23	131	80	79	79		1.001	9.246	871
757	123.249	122.754		0.16	0.16	1.33	1.06	0.26	93	92	79	2.08	1.5	82	0.013	106	105	132.5	0.01	1.09	15.3553505	93.93	166.32	160.44	72.13	166.06	129	80	79	79		1.001	9.086	854
758	123.411	122.917		0.16	0.16	1.33	1.06	0.26	93	92	79	2.07	1.5	82	0.014	102	102	132.4	0.08	1.11	15.4417753	93.76	166.13	160.35	72.15	165.90	127	80	79	79		1.001	9.258	869
759	123.574	123.079		0.16	0.16	1.33	1.06	0.26	93	92	79	2.08	1.5	82	0.014	102	101	132.6	-0.20	1.07	15.3634949	93.46	165.84	160.06	72.16	165.61	126	80	79	79		1.001	8.903	833
760	123.736	123.242		0.16	0.16	1.33	1.06	0.26	93	92	79	2.07	1.5	82	0.014	102	102	132.4	0.16	1.06	15.4507627	93.16	165.62	159.88	72.22	165.39	125	80	79	79		1.001	8.801	821
761	123.899	123.404		0.16	0.16	1.33	1.06	0.26	93	92	79	2.09	1.5	82	0.015	99	98	132.6	-0.14	1.16	15.4254398	92.89	165.34	159.61	72.24	165.14	123	80	79	79		1.001	9.611	894
762	124.062	123.566		0.16	0.16	1.33	1.06	0.26	93	92	79	2.07	1.5	82	0.013	106	105	132.5	0.10	1.11	15.4795294	92.63	165.06	159.31	72.22	164.85	122	80	79	79		1.001	9.247	858
763	124.224	123.729		0.16	0.16	1.33	1.06	0.26	93	92	79	2.07	1.5	81	0.015	98	98	132.4	0.07	1.09	15.4387083	92.41	164.90	159.20	72.25	164.66	121	80	79	79		1.001	9.086	841
764	124.387	123.892		0.16	0.16	1.33	1.06	0.26	93	92	79	2.08	1.5	82	0.013	106	106	132.5	-0.10	0.99	15.4122028	92.21	164.69	159.00	72.24	164.45	121	80	79	79		1.001	8.275	764
765	124.549	124.054		0.16	0.16	1.32	1.06	0.26	93	92	79	2.08	1.5	82	0.016	95	95	132.5	0.02	1.05	15.4132681	92.00	164.48	158.84	72.23	164.22	120	80	79	79		1.001	8.763	807
766	124.712	124.216		0.16	0.16	1.32	1.06	0.26	93	92	79	2.07	1.5	82	0.015	99	98	132.5	-0.05	1.13	15.3646441	91.78	164.15	158.56	72.19	163.97	120	80	79	79		1.001	9.410	865
767	124.875	124.379		0.16	0.16	1.32	1.06	0.26	93	92	79	2.07	1.5	82	0.015	99	99	132.5	0.02	1.07	15.3286352	91.58	163.99	158.33	72.18	163.75	119	80	79	79		1.001	8.925	818
768	125.037	124.542		0.16	0.16	1.33	1.06	0.26	93	92	79	2.08	1.5	81	0.015	98	98	132.4	0.06	0.98	15.4344425	91.47	163.86	158.25	72.15	163.62	119	80	79	79		1.001	8.114	743
769	125.200	124.704		0.16	0.16	1.33	1.06	0.26	93	92	79	2.07	1.5	82	0.014	102	101	132.4	0.03	1.01	15.4609919	91.25	163.61	157.99	72.11	163.36	118	80	79	79		1.001	8.438	771
770	125.362	124.866		0.16	0.16	1.34	1.06	0.26	93	92	79	2.07	1.5	82	0.014	102	101	132.4	-0.01	1.11	15.4896517	91.02	163.33	157.77	72.11	163.12	118	80	79	79		1.001	9.248	843
771	125.525	125.028		0.16	0.16	1.33	1.06	0.26	93	92	79	2.09	1.5	82	0.013	106	105	132.5	-0.03	1.07	15.4993515	90.73	163.06	157.47	72.10	162.82	117	80	79	79		1.001	8.927	811
772	125.688	125.191		0.16	0.16	1.33	1.06	0.26	93	92	78	2.07	1.5	82	0.014	102	102	132.5	-0.05	1.03	15.4606352	90.63	162.94	157.38	72.08	162.72	116	80	79	78		1.001	8.604	781
773	125.850	125.354		0.16	0.16	1.33	1.06	0.26	93	92	78	2.08	1.5	81	0.013	105	106	132.5	-0.03	1.11	15.4153528	90.40	162.63	157.06	72.02	162.42	116	79	79	78		1.001	9.249	837
774	126.013	125.516		0.16	0.16	1.33	1.06	0.26	93	92	78	2.07	1.5	81	0.014	102	101	132.5	0.00	1.09	15.3557043	90.23	162.47	156.90	72.00	162.23	115	80	79	78		1.001	9.088	821
775	126.175	125.677		0.16	0.16	1.32	1.05	0.26	93	92	79	2.09	1.6	88	0.017	93	92	132.5	0.05	1.07	15.3934307	89.99	162.22	156.61	71.99	161.98	139	80	79	79		1.001	8.925	804
776	126.336	125.839		0.16	0.16	1.32	1.04	0.26	93	92	79	2.1	1.6	92	0.013	106	106	132.3	0.22	1.13	15.4990921	89.80	162.04	156.46	71.96	161.77	154	80	79	79		1.001	9.409	846
777	126.498	126.000		0.16	0.16	1.33	1.05	0.26	93	92	79	2.1	1.6	93	0.014	103	102	131.8	0.43	1.07	15.4408941	89.50	161.73	156.24	71.99	161.49	166	80	79	79		1.001	8.924	800
778	126.660	126.161		0.16	0.16	1.32	1.05	0.26	93	92	79	2.1	1.6	95	0.016	96	95	131.3	0.50	1.11	15.5562305	89.36	161.56	156.03	71.97	161.32	177	80	79	79		1.001	9.247	827
779	126.822	126.322		0.16	0.16	1.33	1.06	0.26	93	92	79	2.09	1.6	96	0.016	96	95	131.0	0.38	1.05	15.4319048	89.27	161.53	155.92	71.97	161.23	188	80	79	79		1.001	8.766	783
780	126.983	126.484		0.16	0.16	1.33	1.06	0.26	93	92	79	2.1	1.6	98	0.017	93	93	130.2	0.72	1.11	15.4667673	89.29	161.60	155.94	71.99	161.28	203	81	79	79		1.001	9.249	827
781	127.145	126.646		0.16	0.16	1.34	1.06	0.26	93	92	79	2.1	1.6	102	0.014	103	103	129.8	0.44	1.03	15.4894133	89.39	161.68	156.07	72.01	161.40	217	81	79	79		1.001	8.605	770
782	127.307	126.807		0.16	0.16	1.33	1.06	0.26	93	92	79	2.11	1.6	105	0.015	100	99	129.2	0.62	1.17	15.4407949	89.59	161.88	156.20	72.00	161.59	227	81	79	79		1.001	9.733	873
783	127.468	126.968		0.16	0.16	1.34	1.06	0.26	93	92	79	2.1	1.6	107	0.015	100	100	128.8	0.41	1.03	15.4025822	89.90	162.23	156.56	72.03	161.93	233	81	79	79		1.001	8.556	770
784	127.630	127.131		0.16	0.16	1.33	1.06	0.26	93	92	79	2.12	1.6	108	0.014	104	104	128.2	0.55	1.07	15.4003801	90.30	162.69	156.96	72.03	162.33	240	82	79	79		1.001	8.923	807
785	127.791	127.291		0.16	0.16	1.33	1.05	0.26	93	92	79	2.11	1.6	110	0.014	104	103	127.6	0.66	1.10	15.4894924	90.81	163.17	157.40	72.02	162.82	245	82	79	79		1.001	9.153	832
786	127.953	127.451		0.16	0.16	1.33	1.06	0.26	93	92	79	2.12	1.6	112	0.015	101	99	127.0	0.58	1.01	15.4696922	91.38	163.82	157.97	72.03	163.42	249	82	79	79		1.001	8.439	772
787	128.114	127.613		0.16	0.16	1.33	1.05	0.26	93	92	79	2.11	1.6	113	0.015	100	101	126.3	0.67	1.14	15.4408903	92.19	164.60	158.69	72.02	164.21	253	82	79	79		1.001	9.504	877
788	128.275	127.773		0.16	0.16	1.32	1.04	0.26	93	92	79	2.14	1.6	114	0.016	97	96	125.5	0.83	1.13	15.4697199	92.87	165.30	159.31	72.04	164.91	257	83	79	79		1.001	9.409	875
789	128.436	127.933		0.16	0.16	1.32	1.06	0.26	93	92	79	2.15	1.6	115	0.014	104	103	124.8	0.64	1.11	15.4512653	93.85	166.29	160.24	72.01	165.86	259	83	79	79		1.001	9.251	869
790	128.596	128.094		0.16	0.16	1.31	1.05	0.26	93	92	79	2.16	1.6	115	0.015	100	100	124.1	0.74	1.05	15.3556118	94.63	167.07	161.00	72.02	166.65	262	84	79	79		1.001	8.762	830
791	128.756	128.255		0.16	0.16	1.31	1.04	0.26	93	92	79	2.17	1.7	117	0.014	103	104	123.4	0.73	1.17	15.3747673	95.56	167.97	161.90	72.00	167.56	266	84	79	79		1.001	9.735	931
792	128.916	128.414		0.16	0.16	1.29	1.03	0.26	93	92	78	2.19	1.7	118	0.016	97	96	122.7	0.65	1.13	15.4223413	96.57	169.00	162.84	72.00	168.57	269	85	79	78		1.001	9.411	910
793	129.075	128.573		0.16	0.16	1.29	1.03	0.26	93	92	79	2.19	1.7	118	0.014	103	103	121.8	0.92	1.03	15.469945	97.48	169.96	163.70	72.01	169.49	271	85	79	79		1.001	8.599	839

Elapsed Time	Particulate Sampling Data																	Fuel Weight, lb		Flow, gpm		Temperature Data, oF									Stack			
	Gas Meter Cubic Feet (1)	Gas Meter Cubic Feet (2)	Gas Meter Cubic Feet (amb)	Sample Rate, cfm (1)	Sample Rate, cfm (2)	Orifice dH (1)	Orifice dH (2)	Orifice dH (amb)	Meter oF (1)	Meter oF (2)	Meter oF (amb)	Meter Vac. In. Hg. (1)	Meter Vac. In. Hg. (2)	Dilution Tunnel Temp.	Dilution Tunnel dP	Pro. Rate (%) (1)	Pro. Rate (%) (2)	Scale Reading	Weight Change	Load Side Liquid Flow Rate	Boiler Side Liquid Flow Rate (optional)	Thermopile ΔT	Boiler to Heat Exch. Temp.	Heat Exch to Boiler Temp.	Inlet Load Temp.	Outlet Load Temp.	Stack	Filter (1)	Filter (2)	Ambient	Draft In. H2O	Specific Heat of Inlet Water (BTU/lb-°F)	Mass Flow Rate of Inlet Water (lb/min)	Heat Output, Btu
794	129.237	128.735		0.16	0.16	1.33	1.06	0.26	93	92	79	2.25	1.8	118	0.016	98	98	120.9	0.86	1.09	15.5175056	98.63	171.13	164.88	72.05	170.69	273	85	79	79		1.001	9.085	897
795	129.398	128.896		0.16	0.16	1.32	1.05	0.26	93	92	79	2.25	1.8	119	0.014	104	104	119.9	1.00	1.05	15.4411983	99.60	172.10	165.76	72.03	171.63	274	85	79	79		1.001	8.761	874
796	129.559	129.057		0.16	0.16	1.32	1.05	0.26	93	92	79	2.26	1.8	119	0.015	101	101	119.5	0.39	1.11	15.4895487	100.62	173.13	166.71	72.04	172.66	275	86	79	79		1.001	9.250	932
797	129.720	129.218		0.16	0.16	1.32	1.05	0.26	93	92	79	2.26	1.8	120	0.014	104	104	118.4	1.18	1.15	15.4409752	101.70	174.23	167.75	72.01	173.71	277	86	79	79		1.001	9.572	975
798	129.880	129.377		0.16	0.16	1.32	1.03	0.26	93	92	79	2.28	1.8	120	0.015	100	99	117.5	0.87	1.11	15.5463505	102.79	175.35	168.82	72.06	174.85	278	86	79	79		1.001	9.246	952
799	130.040	129.537		0.16	0.16	1.32	1.04	0.26	93	92	79	2.28	1.8	118	0.015	100	100	116.8	0.66	1.09	15.4001074	103.80	176.37	169.81	72.07	175.88	277	86	79	79		1.001	9.085	944
800	130.200	129.698		0.16	0.16	1.31	1.04	0.26	93	92	79	2.3	1.9	119	0.016	97	97	116.2	0.65	1.05	15.493391	104.89	177.45	170.79	72.08	176.97	278	87	79	79		1.001	8.764	920
801	130.361	129.857		0.16	0.16	1.31	1.04	0.26	93	92	79	2.32	1.9	121	0.014	104	103	115.1	1.11	1.07	15.4699965	105.89	178.37	171.63	72.03	177.92	280	87	79	79		1.001	8.922	946
802	130.526	130.017		0.17	0.16	1.46	1.04	0.26	93	92	79	1.92	1.9	121	0.016	100	97	114.4	0.69	1.13	15.4489174	107.00	179.53	172.79	72.04	179.04	282	82	79	79		1.001	9.409	1008
803	130.691	130.177		0.16	0.16	1.32	1.16	0.26	93	92	79	2.05	1.5	122	0.015	104	100	113.3	1.05	1.03	15.4315834	108.08	180.57	173.73	72.04	180.12	283	86	87	79		1.001	8.602	931
804	130.853	130.346		0.16	0.17	1.32	1.13	0.26	93	92	79	2.05	1.6	122	0.015	102	106	112.6	0.73	1.15	15.4794588	109.13	181.61	174.78	72.01	181.15	284	87	86	79		1.001	9.562	1045
805	131.014	130.512		0.16	0.17	1.33	1.04	0.26	93	92	79	2.05	1.5	121	0.016	98	101	111.6	0.97	1.11	15.4697618	110.15	182.59	175.65	71.94	182.09	280	87	87	79		1.001	9.240	1019
806	131.176	130.671		0.16	0.16	1.32	1.03	0.26	93	92	79	2.05	1.5	101	0.014	103	101	111.4	0.27	1.13	15.3260775	110.88	183.33	176.37	72.03	182.91	254	85	85	79		1.001	9.438	1048
807	131.337	130.832		0.16	0.16	1.32	1.04	0.26	93	92	79	2.05	1.5	95	0.016	96	95	110.9	0.45	1.10	15.4700031	111.25	183.73	176.81	72.06	183.31	239	85	85	79		1.001	9.184	1023
808	131.499	130.993		0.16	0.16	1.33	1.04	0.26	93	92	79	2.03	1.5	91	0.014	102	102	110.4	0.53	1.09	15.3850613	111.49	183.82	176.94	72.04	183.53	230	84	84	79		1.001	9.084	1014
809	131.661	131.154		0.16	0.16	1.32	1.04	0.26	93	92	79	2.04	1.5	91	0.013	106	105	110.2	0.17	1.09	15.4389296	111.50	183.89	176.99	72.04	183.54	222	83	83	79		1.001	9.087	1014
810	131.823	131.314		0.16	0.16	1.33	1.04	0.26	93	92	79	2.03	1.5	90	0.015	99	97	109.9	0.27	1.05	15.3747082	111.48	183.84	177.00	72.03	183.51	215	83	83	79		1.001	8.735	975
811	131.986	131.475		0.16	0.16	1.33	1.05	0.26	93	92	78	2.02	1.5	89	0.015	99	98	109.7	0.23	1.11	15.4134893	111.55	183.89	177.00	72.03	183.58	209	82	82	78		1.001	9.226	1030
812	132.148	131.638		0.16	0.16	1.34	1.05	0.26	93	92	78	2.02	1.5	88	0.014	102	103	109.6	0.10	1.13	15.39645	111.56	183.92	177.01	72.01	183.58	205	82	82	78		1.001	9.391	1049
813	132.310	131.798		0.16	0.16	1.34	1.05	0.26	93	92	79	2.02	1.5	87	0.016	95	94	109.4	0.19	1.11	15.3932972	111.56	183.92	177.02	72.00	183.56	202	81	82	79		1.001	9.247	1033
814	132.473	131.960		0.16	0.16	1.33	1.06	0.26	93	92	79	2.01	1.5	87	0.016	96	95	109.2	0.19	1.09	15.403574	111.58	183.90	176.95	71.98	183.56	199	81	82	79		1.001	9.083	1015
815	132.635	132.122		0.16	0.16	1.34	1.06	0.26	93	92	79	2.01	1.4	85	0.015	98	98	109.1	0.12	1.09	15.4707489	111.69	183.98	177.00	71.95	183.64	198	81	82	79		1.001	9.088	1016
816	132.798	132.285		0.16	0.16	1.33	1.06	0.26	93	92	79	2.02	1.4	84	0.017	93	93	109.2	-0.06	1.11	15.4691925	111.60	183.90	177.05	71.96	183.56	196	81	82	79		1.001	9.248	1033
817	132.960	132.447		0.16	0.16	1.34	1.06	0.26	93	92	79	2.01	1.4	84	0.016	95	95	109.0	0.20	1.09	15.4606667	111.54	183.86	177.05	71.98	183.52	194	81	81	79		1.001	9.087	1015
818	133.122	132.609		0.16	0.16	1.34	1.06	0.26	92	92	79	2.02	1.4	84	0.013	106	105	108.9	0.06	1.07	15.3747396	111.47	183.77	176.87	71.96	183.44	191	81	81	79		1.001	8.927	996
819	133.284	132.772		0.16	0.16	1.34	1.07	0.26	92	92	79	2.03	1.4	84	0.013	106	106	108.9	0.07	1.05	15.3174591	111.39	183.70	176.79	71.98	183.37	189	81	81	79		1.001	8.763	977
820	133.447	132.935		0.16	0.16	1.34	1.07	0.26	92	92	79	2.01	1.4	83	0.014	102	102	108.8	0.03	1.15	15.4317045	111.28	183.61	176.75	72.01	183.29	186	81	81	79		1.001	9.573	1067
821	133.610	133.098		0.16	0.16	1.34	1.06	0.26	92	92	79	2.03	1.4	83	0.016	96	95	108.8	0.01	1.13	15.451252	111.20	183.52	176.65	71.99	183.19	184	81	81	79		1.001	9.413	1048
822	133.772	133.261		0.16	0.16	1.34	1.06	0.26	92	92	79	2.01	1.4	83	0.015	98	99	108.8	0.04	1.05	15.3458424	111.12	183.44	176.62	71.98	183.11	181	81	81	79		1.001	8.762	975
823	133.935	133.423		0.16	0.16	1.34	1.06	0.26	92	92	79	2.02	1.4	83	0.016	96	95	108.7	0.04	1.07	15.4893227	111.00	183.30	176.50	71.98	182.98	179	80	81	79		1.001	8.924	992
824	134.097	133.586		0.16	0.16	1.34	1.07	0.26	92	92	79	2.01	1.4	83	0.016	95	95	108.7	0.01	1.05	15.4220371	110.86	183.18	176.39	71.99	182.86	177	80	81	79		1.001	8.764	973
825	134.260	133.750		0.16	0.16	1.34	1.06	0.26	92	92	79	2.03	1.4	83	0.015	99	99	108.7	-0.01	1.11	15.4628391	110.75	183.06	176.28	71.97	182.72	175	80	81	79		1.001	9.250	1026
826	134.423	133.912		0.16	0.16	1.34	1.06	0.26	92	92	79	2.01	1.4	83	0.016	96	95	108.7	0.00	1.09	15.4355783	110.63	182.93	176.13	72.00	182.62	173	80	81	79		1.001	9.085	1006
827	134.586	134.074		0.16	0.16	1.34	1.06	0.26	92	92	79	2.01	1.4	82	0.016	96	95	108.7	0.08	1.09	15.4317093	110.57	182.81	176.01	71.92	182.49	171	80	81	79		1.001	9.089	1006
828	134.748	134.237		0.16	0.16	1.33	1.07	0.26	92	92	79	2.02	1.4	82	0.016	95	95	108.7	-0.03	1.08	15.4302282	110.44	182.69	175.88	71.95	182.39	169	80	80	79		1.001	8.945	989
829	134.911	134.400		0.16	0.16	1.34	1.06	0.26	92	91	78	2.02	1.4	83	0.014	102	102	108.7	0.04	1.11	15.4512024	110.24	182.56	175.67	72.03	182.27	167	80	80	78		1.001	9.237	1019
830	135.073	134.563		0.16	0.16	1.32	1.05	0.26	92	92	78	2.01	1.4	83	0.015	98	99	108.7	-0.02	1.07	15.4229698	110.13	182.43	175.52	71.99	182.12	166	80	80	78		1.001	8.928	984
831	135.235	134.724		0.16	0.16	1.32	1.05	0.26	92	92	79	2.01	1.4	82	0.015	98	97	108.7	-0.03	1.08	15.5565233	110.02	182.29	175.48	71.97	181.99	164	80	80	79		1.001	8.967	988
832	135.397	134.885		0.16	0.16	1.32	1.06	0.26	92	92	79	2	1.4	82	0.014	102	101	108.7	0.01	1.12	15.3809414	109.87	182.15	175.33	71.96	181.83	162	80	80	79		1.001	9.297	1023
833	135.559	135.047		0.16	0.16	1.32	1.05	0.26	92	91	79	2	1.4	82	0.015	98	98	108.7	-0.02	1.05	15.4389229	109.73	181.99	175.17	71.96	181.69	161	80	80	79		1.001	8.764	963
834	135.721	135.209		0.16	0.16	1.32	1.05	0.26	92	91	78	2.01	1.4	82	0.016	95	95	108.8	-0.06	1.14	15.4468689	109.54	181.81	175.02	71.96	181.50	159	80	80	78		1.001	9.450	1036
835	135.883	135.370		0.16	0.16	1.32	1.05	0.26	92	91	77	2	1.4	82	0.014	102	101	108.7	0.07	1.09	15.4232988	109.41	181.65	174.93	71.93	181.34	158	80	80	77		1.001	9.088	996
836	136.045	135.532		0.16	0.16	1.32	1.05	0.26	92	91	77	2.01	1.4	82	0.015	98	98	108.6	0.10	1.09	15.421298	109.20	181.48	174.77	71.98	181.18	156	80	80	77		1.001	9.091	994
837	136.206	135.694		0.16	0.16	1.32	1.05	0.26	92	91	77	2	1.4	82	0.013	105	105	108.7	-0.13	1.07	15.464469	109.09	181.30	174.63	71.92	181.01	155	80	80	77		1.001	8.933	976
838	136.368	135.856		0.16	0.16	1.32	1.05	0.26	92	91	77	2	1.4	82	0.014	102	102	108.7	0.02	1.07	15.4982424	108.88	181.13	174.46	71.95	180.83	154	80	80	77		1.001	8.932	974
839	136.530	136.017		0.16	0.16	1.32	1.05	0.26	92	91	77	2.01	1.4	82	0.015	98	97	108.6	0.07	1.09	15.4027328	108.76	180.95	174.25	71.90	180.66	152	80	80	77		1.001	9.094	990
840	136.692	136.179		0.16	0.16	1.32	1.05	0.26	92	91	77	2.01	1.4	82	0.013	106	105	108.8	-0.13	1.07	15.4695959	108.62	180.79	174.17	71.88	180.50	151	80	80	77		1.001	8.936	972
841	136.854	136.341		0.16	0.16	1.32	1.05	0.26	92	91	77	2	1.4	82	0.013	106	105	108.7	0.09	1.09	15.4791622	108.37	180.58	173.95	71.93	180.30	150	80	80	77		1.001	9.096	987
842	137.016	136.503		0.16	0.16	1.32	1.05	0.26	92	91	77	1.99	1.4	82	0.015	98	98	108.8	-0.12	1.11	15.5176907	108.24	180.44	173.71	71.90	180.15	149	80	80	77		1.001	9.257	1003
843	137.178	136.664		0.16	0.16	1.33	1.05	0.26	92	91	77	1.99	1.4	82	0.014	102	101	108.8	-0.04	1.11	15.3260593	108.07	180.22	173.52	71.88	179.94	148	79	80	77		1.001	9.262	1002
844	137.340	136.826		0.16	0.16	1.33	1.05	0.26	92	91	77	1.99	1.4	82	0.015	98	98	108.8	0.01	1.05	15.3746605	107.88	180.05	173.44	71.88	179.76	147	79	80	77		1.001	8.773	948
845	137.502	136.988		0.16	0.16	1.32	1.05	0.26	92	91	77	2.01	1.4	82	0.014	102	102	108.9	-0.03	1.07	15.4643173	107.70	179.87	173.20	71.88	179.58	146	79	80	77		1.001	8.933	963
846	137.663	137.150		0.16	0.16	1.32	1.05	0.26	92	91	76	2	1.4	82	0.014	101	102	108.8	0.08	1.09	15.3746786	107.52	179.68	173.08	71.87	179.39	145	79	80	76		1.001	9.099	979
847	137.825	137.311		0.16	0.16	1.33	1.05	0.26	92	91	76	2.01	1.4	82	0.014	102	101	108.9	-0.11	1.11	15.4128428	107.34	179.46	172.88	71.83	179.18	144	79	79	76		1.001	9.261	995
848	137.987	137.473		0.16	0.16	1.33	1.05	0.26	92	91	76	1.99	1.4	82	0.013	106	105	108.9	0.01	1.11	15.4065189	107.08	179.23	172.69	71.86	178.94	143	79	79	76		1.001	9.262	993
849	138.149	137.635		0.16	0.16	1.33	1.05	0.26	92	91	76	2.01	1.4	82	0.014	102	102	108.9	0.02	1.07	15.4322634	106.90	179.03	172.47	71.84	178.74	142	79	79	76		1.001	8.935	956
850	138.311	137.796		0.16	0.16	1.33	1.05	0.26	92	91	77	2	1.4	81	0.014	102	101	108.8	0.04	1.07	15.4894943	106.67	178.82	172.22	71.88	178.55	141	79	79	77		1.001	8.937	954
851	138.473	137.957		0.16	0.16	1.33	1.05	0.26	92	91	77	2	1.4	81	0.014	102	101	108.9	-0.07	1.06	15.4897013	106.49	178.60	171.95	71.84	178.33	141	79	79	77		1.001	8.784	937
852	138.635	138.119		0.16	0.16	1.33	1.05	0.26	92	91	77	2.01	1.4	81	0.016	95	95	108.8	0.10	1.15	15.4514141	106.28	178.40	171.76	71.86	178.14	140	79	79	77		1.001	9.582	1020
853	138.797	138.282		0.16	0.16	1.33	1.05	0.26	92	91	77	2	1.4	81	0.014	102	102	109.0	-0.17	1.08	15.4717541	106.05	178.18	171.58	71.86	177.91	139	79	79	77		1.001	8.942	949
854	138.958	138.443		0.16	0.16	1.33	1.05	0.26	92	91	77	2	1.4	81	0.014	101	101	108.9	0.06	1.15	15.4892941	105.83	177.97	171.45	71.85	177.68	138	79	79	77		1.001	9.554	1012
855	139.120	138.604		0.16	0.16	1.32	1.05	0.26	92	91	78	2	1.4	81	0.015	98	97	108.8	0.12	1.03	15.4609032	105.67	177.75	171.53	71.80	177.46	138	79	79	78		1.001	8.579	908

Elapsed Time	Particulate Sampling Data																	Fuel Weight, lb		Flow, gpm		Temperature Data, oF									Stack			
	Gas Meter Cubic Feet (1)	Gas Meter Cubic Feet (2)	Gas Meter Cubic Feet (amb)	Sample Rate, cfm (1)	Sample Rate, cfm (2)	Orifice dH (1)	Orifice dH (2)	Orifice dH (amb)	Meter oF (1)	Meter oF (2)	Meter oF (amb)	Meter Vac. In. Hg. (1)	Meter Vac. In. Hg. (2)	Dilution Tunnel Temp.	Dilution Tunnel dP	Pro. Rate (%) (1)	Pro. Rate (%) (2)	Scale Reading	Weight Change	Load Side Liquid Flow Rate	Boiler Side Liquid Flow Rate (optional)	Thermopile ΔT	Boiler to Heat Exch. Temp.	Heat Exch to Boiler Temp.	Inlet Load Temp.	Outlet Load Temp.	Stack	Filter (1)	Filter (2)	Ambient	Draft In. H2O	Specific Heat of Inlet Water (BTU/lb-°F)	Mass Flow Rate of Inlet Water (lb/min)	Heat Output, Btu
856	139.282	138.766		0.16	0.16	1.32	1.05	0.26	92	91	78	1.99	1.4	81	0.013	105	105	108.9	-0.14	1.13	15.3746519	105.38	177.52	171.13	71.87	177.24	137	79	79	78		1.001	9.414	993
857	139.444	138.929		0.16	0.16	1.33	1.05	0.26	92	91	78	1.99	1.4	81	0.014	102	102	109.0	-0.10	1.09	15.441102	105.16	177.34	170.92	71.90	177.06	136	79	79	78		1.001	9.083	956
858	139.606	139.090		0.16	0.16	1.33	1.05	0.26	92	91	78	1.99	1.4	81	0.014	102	101	108.9	0.16	1.05	15.4698973	104.95	177.12	170.73	71.90	176.86	136	79	79	78		1.001	8.764	921
859	139.768	139.251		0.16	0.16	1.32	1.05	0.26	92	91	78	2	1.4	81	0.016	95	94	109.2	-0.31	1.07	15.4892826	104.71	176.93	170.43	71.91	176.62	135	79	79	78		1.001	8.927	936
860	139.930	139.413		0.16	0.16	1.33	1.05	0.26	92	91	77	2.01	1.4	81	0.013	105	105	109.0	0.20	1.09	15.4987221	104.52	176.70	170.30	71.90	176.41	134	79	79	77		1.001	9.089	951
861	140.091	139.575		0.16	0.16	1.33	1.05	0.26	92	91	77	2.01	1.4	81	0.016	94	95	109.0	-0.02	1.13	15.4026251	104.30	176.50	170.10	71.92	176.21	133	79	79	77		1.001	9.421	984
862	140.253	139.736		0.16	0.16	1.34	1.05	0.26	92	91	77	2.01	1.4	81	0.015	98	97	109.0	-0.01	1.13	15.4588528	104.07	176.28	169.87	71.93	175.99	133	79	79	77		1.001	9.419	981
863	140.415	139.897		0.16	0.16	1.32	1.05	0.26	92	91	77	2	1.4	81	0.014	102	101	109.0	0.01	1.04	15.4605637	103.85	175.98	169.64	71.86	175.71	132	79	79	77		1.001	8.612	895
864	140.577	140.059		0.16	0.16	1.33	1.05	0.26	92	91	77	2	1.4	81	0.015	98	98	109.1	-0.14	1.04	15.4607029	103.66	175.79	169.51	71.86	175.53	132	79	79	77		1.001	8.612	894
865	140.739	140.222		0.16	0.16	1.33	1.05	0.26	92	91	78	2	1.4	81	0.014	102	102	109.0	0.10	1.05	15.4794073	103.41	175.56	169.23	71.85	175.26	131	79	79	78		1.001	8.766	908
866	140.900	140.383		0.16	0.16	1.33	1.05	0.26	92	91	78	2.01	1.4	81	0.014	101	101	109.1	-0.06	1.05	15.4141541	103.27	175.35	169.01	71.78	175.05	131	79	79	78		1.001	8.767	906
867	141.062	140.544		0.16	0.16	1.33	1.05	0.26	92	91	78	2	1.4	81	0.014	102	101	109.0	0.04	1.05	15.4224024	103.08	175.10	168.77	71.75	174.83	130	79	79	78		1.001	8.765	905
868	141.224	140.706		0.16	0.16	1.33	1.05	0.26	92	91	78	2.01	1.4	81	0.015	98	98	109.1	-0.04	1.05	15.5367508	102.93	174.89	168.59	71.73	174.65	130	79	79	78		1.001	8.766	903
869	141.386	140.868		0.16	0.16	1.33	1.05	0.26	92	91	78	1.99	1.4	81	0.014	102	101	109.0	0.08	1.09	15.5081511	102.72	174.61	168.38	71.67	174.39	129	79	79	78		1.001	9.091	935
870	141.548	141.029		0.16	0.16	1.33	1.05	0.26	92	91	78	2.01	1.4	81	0.014	102	101	109.0	-0.03	1.13	15.4784565	102.38	174.40	168.13	71.77	174.15	129	79	79	78		1.001	9.415	965
871	141.709	141.191		0.16	0.16	1.33	1.05	0.26	92	91	78	1.99	1.4	81	0.015	98	98	109.0	0.03	1.09	15.4163895	102.21	174.24	168.06	71.78	173.99	128	79	79	78		1.001	9.088	930
872	141.871	141.353		0.16	0.16	1.33	1.05	0.26	92	91	78	2.01	1.4	81	0.015	98	98	109.0	0.02	1.11	15.4695435	101.94	173.93	167.67	71.72	173.67	128	79	79	78		1.001	9.251	944
873	142.033	141.515		0.16	0.16	1.33	1.05	0.26	92	91	78	2	1.4	81	0.014	102	101	109.0	0.01	1.05	15.4331989	101.67	173.71	167.53	71.80	173.48	127	79	79	78		1.001	8.766	892
874	142.195	141.676		0.16	0.16	1.33	1.05	0.26	92	91	78	2	1.4	81	0.014	102	101	109.2	-0.18	1.05	15.5272255	101.53	173.55	167.38	71.76	173.29	127	79	79	78		1.001	8.771	892
875	142.357	141.837		0.16	0.16	1.32	1.04	0.26	92	91	78	2.03	1.4	93	0.014	103	102	108.8	0.31	1.13	15.3458023	101.29	173.27	167.05	71.73	173.02	156	80	80	78		1.001	9.410	954
876	142.519	141.999		0.16	0.16	1.33	1.05	0.26	92	91	78	2.01	1.4	83	0.012	110	110	108.7	0.10	1.05	15.4887238	100.98	172.99	166.80	71.77	172.75	148	79	79	78		1.001	8.771	887
877	142.681	142.160		0.16	0.16	1.33	1.04	0.26	92	91	78	2.01	1.4	82	0.015	98	97	108.7	0.00	1.08	15.4220438	100.76	172.79	166.57	71.77	172.54	143	79	79	78		1.001	8.976	906
878	142.842	142.321		0.16	0.16	1.33	1.05	0.26	92	91	78	2.01	1.4	81	0.015	98	97	108.7	0.01	1.07	15.345624	100.52	172.54	166.35	71.78	172.29	139	79	79	78		1.001	8.927	898
879	143.004	142.483		0.16	0.16	1.33	1.05	0.26	92	91	78	2.01	1.4	81	0.014	102	101	108.7	0.00	1.11	15.3550663	100.27	172.30	166.17	71.78	172.05	136	79	79	78		1.001	9.238	927
880	143.166	142.645		0.16	0.16	1.33	1.05	0.26	92	91	78	1.99	1.4	81	0.016	95	95	108.7	0.06	1.06	15.4405479	100.02	172.09	165.94	71.82	171.84	134	79	79	78		1.001	8.809	882
881	143.328	142.806		0.16	0.16	1.33	1.05	0.26	92	91	78	1.99	1.4	81	0.014	102	101	108.8	-0.10	1.07	15.4650164	99.81	171.87	165.67	71.83	171.63	132	79	79	78		1.001	8.928	892
882	143.490	142.968		0.16	0.16	1.33	1.05	0.26	92	91	78	1.99	1.4	81	0.015	98	98	108.8	0.01	1.11	15.4470463	99.61	171.69	165.57	71.83	171.44	130	79	79	78		1.001	9.249	922
883	143.652	143.129		0.16	0.16	1.33	1.05	0.26	92	91	78	2.01	1.4	81	0.015	98	97	108.7	0.08	1.09	15.3262663	99.33	171.43	165.37	71.84	171.18	129	79	79	78		1.001	9.093	904
884	143.814	143.292		0.16	0.16	1.33	1.05	0.26	92	91	78	2.01	1.4	81	0.017	92	93	108.8	-0.15	1.09	15.4313459	99.10	171.19	165.12	71.85	170.95	128	79	79	78		1.001	9.090	902
885	143.975	143.453		0.16	0.16	1.33	1.05	0.26	92	91	78	2.01	1.4	81	0.015	98	97	108.7	0.12	1.09	15.4844332	98.84	170.96	164.92	71.89	170.72	127	79	79	78		1.001	9.087	899
886	144.137	143.614		0.16	0.16	1.33	1.06	0.26	92	91	77	1.99	1.4	81	0.016	95	94	108.8	-0.14	1.11	15.4045944	98.57	170.73	164.75	71.89	170.46	126	79	79	77		1.001	9.256	913
887	144.299	143.776		0.16	0.16	1.33	1.05	0.26	92	91	78	2	1.4	81	0.014	102	101	108.8	0.02	1.15	15.3755713	98.36	170.50	164.43	71.89	170.25	125	79	79	78		1.001	9.577	943
888	144.461	143.938		0.16	0.16	1.33	1.05	0.26	92	91	78	2.01	1.4	81	0.013	105	105	108.7	0.15	1.11	15.3358984	98.17	170.26	164.23	71.85	170.01	124	79	79	78		1.001	9.253	909
889	144.623	144.099		0.16	0.16	1.33	1.05	0.26	92	91	78	2.01	1.4	81	0.013	105	105	108.8	-0.12	1.13	15.440732	97.89	170.01	163.96	71.88	169.77	124	79	79	78		1.001	9.414	923
890	144.785	144.261		0.16	0.16	1.33	1.05	0.26	92	91	78	2	1.4	81	0.014	102	101	108.9	-0.11	1.07	15.4513712	97.74	169.81	163.77	71.85	169.59	123	79	79	78		1.001	8.933	874
891	144.947	144.423		0.16	0.16	1.33	1.05	0.26	92	91	78	2	1.4	81	0.015	98	98	108.7	0.17	1.05	15.4893074	97.51	169.55	163.54	71.81	169.32	123	79	79	78		1.001	8.768	856
892	145.109	144.585		0.16	0.16	1.33	1.05	0.26	92	91	78	2.01	1.4	81	0.013	105	105	108.8	-0.10	1.09	15.4130564	97.38	169.39	163.26	71.76	169.13	122	79	79	78		1.001	9.091	886
893	145.271	144.746		0.16	0.16	1.33	1.05	0.26	92	91	78	2.01	1.4	81	0.016	95	94	108.9	-0.04	1.09	15.5174379	97.07	169.12	163.11	71.79	168.85	122	79	79	78		1.001	9.092	884
894	145.433	144.908		0.16	0.16	1.33	1.06	0.26	92	91	78	2.01	1.4	81	0.014	102	101	108.9	0.00	1.11	15.3931379	96.90	168.88	162.95	71.75	168.65	122	79	79	78		1.001	9.251	897
895	145.595	145.070		0.16	0.16	1.33	1.06	0.26	92	91	78	2	1.4	81	0.016	95	95	108.8	0.02	1.09	15.3644686	96.64	168.67	162.73	71.80	168.45	121	79	79	78		1.001	9.092	880
896	145.757	145.231		0.16	0.16	1.33	1.05	0.26	92	91	78	2.01	1.4	81	0.015	98	97	108.8	0.04	1.05	15.4133224	96.44	168.47	162.43	71.76	168.20	121	79	79	78		1.001	8.770	847
897	145.919	145.392		0.16	0.16	1.33	1.05	0.26	92	91	78	2.01	1.4	81	0.015	98	97	108.6	0.17	1.07	15.3870173	96.14	168.17	162.26	71.80	167.93	120	79	79	78		1.001	8.931	860
898	146.080	145.554		0.16	0.16	1.33	1.05	0.26	92	91	78	2	1.4	81	0.016	94	95	108.7	-0.08	1.11	15.4405861	95.91	167.90	162.12	71.79	167.70	120	79	79	78		1.001	9.252	888
899	146.242	145.716		0.16	0.16	1.33	1.05	0.26	92	91	78	2	1.4	81	0.014	102	101	108.9	-0.15	1.08	15.4513712	95.75	167.75	161.90	71.77	167.51	120	79	79	78		1.001	8.944	857
900	146.404	145.878		0.16	0.16	1.33	1.05	0.26	92	91	78	2	1.4	81	0.014	102	101	108.6	0.23	1.09	15.374609	95.51	167.43	161.63	71.69	167.20	119	79	79	78		1.001	9.093	869
901	146.566	146.039		0.16	0.16	1.33	1.05	0.26	92	91	78	2	1.4	81	0.014	102	101	108.9	-0.23	1.09	15.4025621	95.31	167.29	161.46	71.74	167.05	118	79	79	78		1.001	9.091	867
902	146.728	146.201		0.16	0.16	1.33	1.05	0.26	92	91	78	2	1.4	81	0.016	95	95	109.0	-0.11	1.08	15.5461054	95.05	167.04	161.22	71.75	166.80	118	79	79	78		1.001	9.016	858
903	146.890	146.363		0.16	0.16	1.32	1.05	0.26	92	91	78	2.01	1.4	81	0.015	98	98	108.7	0.25	1.04	15.4604416	94.84	166.83	161.02	71.74	166.58	118	79	79	78		1.001	8.670	823
904	147.052	146.524		0.16	0.16	1.32	1.05	0.26	92	91	78	2	1.4	81	0.013	105	105	108.8	-0.02	1.06	15.4695215	94.59	166.58	160.75	71.73	166.32	118	79	79	78		1.001	8.797	833
905	147.214	146.685		0.16	0.16	1.33	1.05	0.26	92	91	78	2	1.4	81	0.014	102	101	108.9	-0.16	1.08	15.3840132	94.31	166.26	160.46	71.73	166.04	119	79	79	78		1.001	8.949	845
906	147.375	146.846		0.16	0.16	1.32	1.05	0.26	92	91	78	2.01	1.4	88	0.017	92	92	108.7	0.18	1.02	15.4142084	94.11	166.07	160.25	71.72	165.84	144	79	79	78		1.001	8.445	796
907	147.537	147.009		0.16	0.16	1.32	1.05	0.26	92	91	78	2	1.4	82	0.015	98	99	108.8	-0.04	1.11	15.4513893	93.90	165.86	160.03	71.75	165.65	138	79	79	78		1.001	9.252	870
908	147.699	147.170		0.16	0.16	1.32	1.05	0.26	92	91	78	2.01	1.4	81	0.016	95	94	108.6	0.15	1.07	15.4604168	93.64	165.62	159.81	71.75	165.39	133	79	79	78		1.001	8.932	837
909	147.861	147.331		0.16	0.16	1.32	1.05	0.26	92	91	78	2	1.4	81	0.013	105	105	108.7	-0.07	1.05	15.4127998	93.39	165.39	159.57	71.75	165.14	129	79	79	78		1.001	8.770	820
910	148.023	147.493		0.16	0.16	1.32	1.05	0.26	92	91	77	1.99	1.4	81	0.014	102	101	108.7	-0.01	1.07	15.3962612	93.18	165.17	159.32	71.75	164.94	127	79	79	77		1.001	8.932	833
911	148.185	147.655		0.16	0.16	1.32	1.05	0.26	92	91	77	2	1.4	81	0.015	98	98	108.5	0.19	1.13	15.4073124	92.91	164.88	159.16	71.73	164.65	125	79	79	77		1.001	9.417	876
912	148.347	147.816		0.16	0.16	1.32	1.05	0.26	92	91	77	2	1.4	81	0.014	102	101	108.6	-0.13	1.07	15.4225101	92.70	164.67	158.96	71.77	164.47	123	79	79	77		1.001	8.934	829
913	148.509	147.977		0.16	0.16	1.32	1.06	0.26	92	91	77	2	1.4	81	0.014	102	101	108.8	-0.17	1.00	15.3931246	92.47	164.46	158.63	71.78	164.25	122	79	79	77		1.001	8.290	767
914	148.670	148.139		0.16	0.16	1.32	1.05	0.26	92	91	77	1.99	1.4	81	0.014	101	101	108.6	0.20	1.07	15.4247684	92.26	164.25	158.41	71.74	164.00	121	79	79	77		1.001	8.938	826
915	148.832	148.301		0.16	0.16	1.33	1.05	0.26	92	91	77	1.99	1.4	81	0.016	95	95	108.7	-0.09	1.06	15.4757862	92.10	164.01	158.20	71.72	163.82	120	79	79	77		1.001	8.778	809
916	148.994	148.462		0.16	0.16	1.32	1.05	0.26	92	91	77	1.99	1.4	81	0.015	98	97	108.6	0.13	1.15	15.3745956	91.85	163.79	158.06	71.72	163.57	120	79	79	77		1.001	9.586	881
917	149.156	148.624		0.16	0.16	1.33	1.05	0.26	92	91	77	2.01	1.4	80	0.014	102	101	108.7	-0.12	1.11	15.4598989	91.65	163.54	157.74	71.66	163.31	119	79	79	77		1.001	9.261	850

Elapsed Time	Particulate Sampling Data																	Fuel Weight, lb		Flow, gpm		Temperature Data, oF									Stack			
	Gas Meter Cubic Feet (1)	Gas Meter Cubic Feet (2)	Gas Meter Cubic Feet (amb)	Sample Rate, cfm (1)	Sample Rate, cfm (2)	Orifice dH (1)	Orifice dH (2)	Orifice dH (amb)	Meter oF (1)	Meter oF (2)	Meter oF (amb)	Meter Vac. In. Hg. (1)	Meter Vac. In. Hg. (2)	Dilution Tunnel Temp.	Dilution Tunnel dP	Pro. Rate (%) (1)	Pro. Rate (%) (2)	Scale Reading	Weight Change	Load Side Liquid Flow Rate	Boiler Side Liquid Flow Rate (optional)	Thermopile ΔT	Boiler to Heat Exch. Temp.	Heat Exch to Boiler Temp.	Inlet Load Temp.	Outlet Load Temp.	Stack	Filter (1)	Filter (2)	Ambient	Draft In. H2O	Specific Heat of Inlet Water (BTU/lb-°F)	Mass Flow Rate of Inlet Water (lb/min)	Heat Output, Btu
918	149.318	148.786		0.16	0.16	1.32	1.05	0.26	92	91	77	2	1.4	80	0.013	105	105	108.5	0.17	1.09	15.3455992	91.48	163.33	157.62	71.64	163.11	118	79	79	77		1.001	9.103	834
919	149.480	148.948		0.16	0.16	1.33	1.05	0.26	91	91	77	2.01	1.4	80	0.014	102	101	108.6	-0.11	1.13	15.4135122	91.34	163.12	157.39	71.60	162.94	118	79	79	77		1.001	9.419	861
920	149.642	149.109		0.16	0.16	1.33	1.05	0.26	91	91	77	2.01	1.4	80	0.015	98	97	108.8	-0.14	1.13	15.4038353	90.97	162.86	157.16	71.64	162.61	117	79	79	77		1.001	9.421	858
921	149.804	149.270		0.16	0.16	1.33	1.05	0.26	91	91	77	2.01	1.4	80	0.014	102	101	108.7	0.02	1.11	15.3695478	90.76	162.62	156.91	71.61	162.37	119	79	79	77		1.001	9.273	843
922	149.966	149.433		0.16	0.16	1.32	1.05	0.26	91	91	77	2.01	1.4	89	0.017	93	93	108.5	0.25	1.12	15.403842	90.61	162.43	156.79	71.59	162.20	146	79	79	77		1.001	9.279	842
923	150.127	149.593		0.16	0.16	1.32	1.04	0.26	91	91	77	2.02	1.4	91	0.016	96	95	108.4	0.06	1.09	15.348917	90.36	162.16	156.51	71.58	161.94	158	79	79	77		1.001	9.086	822
924	150.289	149.753		0.16	0.16	1.33	1.05	0.26	91	91	77	2	1.4	92	0.015	99	98	108.2	0.27	1.11	15.3745842	90.17	161.95	156.32	71.57	161.74	168	79	79	77		1.001	9.261	836
925	150.451	149.915		0.16	0.16	1.33	1.05	0.26	91	91	76	2	1.4	93	0.014	103	103	107.7	0.46	1.10	15.4695053	90.08	161.84	156.21	71.54	161.62	179	80	79	76		1.001	9.175	827
926	150.612	150.077		0.16	0.16	1.33	1.05	0.26	91	91	76	2	1.4	95	0.016	96	96	107.4	0.29	1.11	15.4223709	89.90	161.72	156.01	71.55	161.45	190	80	80	76		1.001	9.203	828
927	150.774	150.238		0.16	0.16	1.34	1.06	0.26	91	90	77	2.01	1.4	97	0.013	107	106	106.8	0.64	1.13	15.4694853	89.99	161.82	156.18	71.55	161.54	200	80	80	77		1.001	9.425	849
928	150.936	150.399		0.16	0.16	1.34	1.06	0.26	91	90	76	2.02	1.4	100	0.015	100	99	106.4	0.42	1.10	15.377636	90.10	161.93	156.29	71.57	161.67	211	80	80	76		1.001	9.158	826
929	151.097	150.561		0.16	0.16	1.33	1.06	0.26	91	90	76	2.02	1.4	103	0.013	107	108	105.5	0.82	1.11	15.3841238	90.18	162.03	156.39	71.55	161.73	220	81	80	76		1.001	9.263	836
930	151.258	150.721		0.16	0.16	1.33	1.05	0.26	91	90	76	2.03	1.4	105	0.015	100	99	105.0	0.52	1.06	15.4025574	90.47	162.40	156.73	71.58	162.04	227	81	81	76		1.001	8.777	795
931	151.420	150.882		0.16	0.16	1.34	1.05	0.26	91	90	76	2.03	1.4	107	0.016	98	97	104.3	0.67	1.11	15.3931694	90.94	162.85	157.12	71.58	162.52	235	81	81	76		1.001	9.262	843
932	151.581	151.042		0.16	0.16	1.33	1.06	0.26	91	90	76	2.02	1.4	109	0.015	100	99	103.9	0.47	1.15	15.4234028	91.37	163.31	157.64	71.61	162.98	243	82	81	76		1.001	9.586	877
933	151.743	151.204		0.16	0.16	1.33	1.11	0.26	91	90	76	2.03	1.3	112	0.015	101	101	103.1	0.82	1.17	15.4709158	91.85	163.85	158.02	71.64	163.49	250	82	81	76		1.001	9.750	896
934	151.904	151.368		0.16	0.16	1.34	1.04	0.26	91	90	77	2	1.4	113	0.016	97	99	102.1	0.98	1.09	15.3959837	92.58	164.70	158.89	71.67	164.25	257	82	81	77		1.001	9.099	843
935	152.066	151.528		0.16	0.16	1.33	1.05	0.26	91	90	76	2.02	1.5	114	0.015	101	100	101.6	0.50	1.05	15.4701452	93.37	165.46	159.54	71.69	165.06	260	82	83	76		1.001	8.775	820
936	152.228	151.688		0.16	0.16	1.33	1.05	0.26	91	90	76	2.01	1.5	115	0.016	98	97	100.6	0.95	1.04	15.4351482	94.26	166.33	160.42	71.66	165.92	262	83	83	76		1.001	8.612	813
937	152.389	151.849		0.16	0.16	1.34	1.04	0.26	91	90	76	2.02	1.5	115	0.015	101	101	100.3	0.30	1.04	15.4339352	95.06	167.15	161.17	71.67	166.73	264	83	83	76		1.001	8.615	820
938	152.550	152.008		0.16	0.16	1.34	1.04	0.26	91	90	76	2.01	1.5	116	0.015	101	99	99.4	0.88	1.11	15.3996391	95.81	167.98	161.90	71.74	167.55	266	84	84	76		1.001	9.265	889
939	152.712	152.168		0.16	0.16	1.33	1.04	0.26	91	90	76	2.02	1.5	117	0.014	105	104	98.6	0.84	1.11	15.4008875	96.73	168.88	162.78	71.72	168.45	269	84	84	76		1.001	9.264	897
940	152.873	152.328		0.16	0.16	1.33	1.04	0.26	91	90	76	2.02	1.5	117	0.016	98	97	98.0	0.61	1.11	15.4509268	97.68	169.89	163.73	71.72	169.39	272	85	85	76		1.001	9.261	906
941	153.034	152.487		0.16	0.16	1.34	1.04	0.26	91	90	76	2.03	1.5	118	0.016	98	96	97.3	0.73	1.04	15.507987	98.68	170.93	164.67	71.74	170.42	273	85	85	76		1.001	8.615	851
942	153.195	152.647		0.16	0.16	1.33	1.04	0.26	91	90	76	2.03	1.5	118	0.016	98	97	96.4	0.89	1.13	15.5461845	99.71	171.87	165.66	71.73	171.44	275	85	85	76		1.001	9.425	941
943	153.356	152.807		0.16	0.16	1.33	1.03	0.26	91	90	76	2.03	1.5	119	0.017	95	94	95.8	0.57	1.11	15.3839722	100.83	173.03	166.70	71.70	172.53	275	86	86	76		1.001	9.263	935
944	153.517	152.966		0.16	0.16	1.32	1.04	0.26	91	90	76	2.03	1.5	119	0.017	95	94	94.5	1.32	1.07	15.4510403	101.92	174.13	167.69	71.69	173.61	276	86	86	76		1.001	8.938	912
945	153.678	153.126		0.16	0.16	1.32	1.03	0.26	91	90	76	2.03	1.5	119	0.016	98	97	93.8	0.64	1.09	15.5079412	102.99	175.16	168.61	71.67	174.66	277	86	86	76		1.001	9.096	938
946	153.838	153.284		0.16	0.16	1.32	1.03	0.26	91	90	76	2.03	1.5	120	0.016	97	96	93.2	0.63	1.13	15.4510784	103.92	176.02	169.53	71.62	175.54	279	87	87	76		1.001	9.413	979
947	153.999	153.444		0.16	0.16	1.32	1.06	0.26	91	90	76	2.05	1.5	120	0.016	98	97	92.6	0.64	1.11	15.4893703	104.98	177.13	170.48	71.65	176.63	280	87	87	76		1.001	9.264	974
948	154.159	153.605		0.16	0.16	1.32	1.05	0.26	91	90	76	2.04	1.5	119	0.015	101	101	91.6	0.94	1.09	15.4572144	105.96	178.13	171.44	71.67	177.64	279	87	87	76		1.001	9.101	965
949	154.320	153.766		0.16	0.16	1.32	1.05	0.26	91	90	77	2.06	1.5	120	0.016	98	98	91.1	0.57	1.01	15.4430714	106.96	179.11	172.61	71.63	178.59	281	87	87	77		1.001	8.406	900
950	154.481	153.926		0.16	0.16	1.32	1.05	0.26	91	90	76	2.05	1.5	121	0.015	101	100	90.2	0.85	1.07	15.4692421	107.96	180.08	173.23	71.62	179.58	283	87	88	76		1.001	8.935	966
951	154.641	154.087		0.16	0.16	1.32	1.05	0.26	91	90	76	2.04	1.6	119	0.015	101	101	89.4	0.82	1.11	15.3921347	108.94	181.05	174.24	71.64	180.58	282	87	87	76		1.001	9.259	1010
952	154.801	154.247		0.16	0.16	1.32	1.04	0.26	91	90	76	2.07	1.6	119	0.014	104	104	88.6	0.82	1.11	15.4021225	109.96	182.04	175.14	71.60	181.56	281	88	88	76		1.001	9.261	1020
953	154.961	154.406		0.16	0.16	1.32	1.05	0.26	91	90	76	2.06	1.5	111	0.015	100	99	87.9	0.61	1.07	15.4128246	110.86	183.02	176.07	71.63	182.49	268	86	87	76		1.001	8.940	992
954	155.122	154.567		0.16	0.16	1.32	1.04	0.26	91	90	76	2.05	1.5	98	0.014	103	103	87.6	0.38	1.06	15.3647385	111.71	183.75	176.80	71.60	183.31	247	86	86	76		1.001	8.778	982
955	155.283	154.728		0.16	0.16	1.32	1.04	0.26	91	90	76	2.04	1.5	94	0.016	96	96	87.3	0.24	1.04	15.4025059	112.08	184.07	177.43	71.63	183.71	234	85	85	76		1.001	8.611	966
956	155.444	154.888		0.16	0.16	1.32	1.04	0.26	91	90	76	2.04	1.5	91	0.016	96	95	86.9	0.42	1.06	15.412466	112.17	184.16	177.51	71.62	183.79	225	84	84	76		1.001	8.776	986
957	155.604	155.048		0.16	0.16	1.32	1.04	0.26	91	90	77	2.04	1.5	90	0.014	101	101	86.7	0.15	1.06	15.4512672	112.34	184.36	177.59	71.63	183.97	218	84	84	77		1.001	8.777	987
958	155.766	155.210		0.16	0.16	1.33	1.04	0.26	91	90	77	2.03	1.5	89	0.013	106	106	86.6	0.19	1.05	15.3745394	112.50	184.43	177.75	71.59	184.09	213	83	83	77		1.001	8.774	988
959	155.927	155.370		0.16	0.16	1.32	1.05	0.26	91	90	76	2.03	1.5	88	0.018	90	89	86.3	0.27	1.05	15.4024925	112.61	184.57	177.87	71.61	184.22	208	82	82	76		1.001	8.772	989
960	156.088	155.531		0.16	0.16	1.33	1.06	0.26	91	90	77	2.02	1.5	87	0.014	102	102	86.3	-0.02	1.02	15.469821	112.66	184.55	177.60	71.58	184.24	204	81	81	77		1.001	8.447	953
961	156.250	155.693		0.16	0.16	1.32	1.06	0.26	91	90	76	2.01	1.5	86	0.014	102	102	86.1	0.19	1.13	15.4891968	112.75	184.62	177.82	71.53	184.28	201	81	81	76		1.001	9.421	1063
962	156.411	155.855		0.16	0.16	1.33	1.05	0.26	91	90	76	2.01	1.5	85	0.014	102	102	86.0	0.16	1.09	15.4310665	112.81	184.62	177.69	71.48	184.29	199	81	81	76		1.001	9.096	1027
963	156.573	156.017		0.16	0.16	1.33	1.06	0.26	91	90	77	2.01	1.5	84	0.015	99	98	85.8	0.16	1.11	15.3746271	112.78	184.64	177.67	71.49	184.28	197	81	81	77		1.001	9.261	1046
964	156.735	156.179		0.16	0.16	1.33	1.07	0.26	91	90	76	2.01	1.5	84	0.014	102	102	85.8	0.02	1.09	15.4511709	112.81	184.63	177.62	71.50	184.30	195	81	81	76		1.001	9.103	1028
965	156.897	156.342		0.16	0.16	1.33	1.07	0.26	91	90	76	2	1.5	83	0.015	99	99	85.8	-0.03	1.07	15.4367342	112.73	184.54	177.56	71.46	184.19	193	81	81	76		1.001	8.937	1009
966	157.058	156.505		0.16	0.16	1.33	1.07	0.26	91	90	76	2	1.5	83	0.016	95	96	85.6	0.20	1.11	15.4386654	112.71	184.50	177.52	71.47	184.18	191	81	81	76		1.001	9.262	1045
967	157.220	156.668		0.16	0.16	1.33	1.07	0.26	91	90	76	2	1.5	83	0.013	106	106	85.5	0.07	1.06	15.4746323	112.69	184.41	177.44	71.42	184.10	188	80	81	76		1.001	8.785	991
968	157.382	156.830		0.16	0.16	1.33	1.07	0.26	91	90	76	2	1.5	83	0.015	99	98	85.6	-0.05	1.07	15.3967075	112.68	184.32	177.37	71.32	184.00	185	80	81	76		1.001	8.930	1007
969	157.544	156.993		0.16	0.16	1.33	1.07	0.26	91	90	76	2	1.5	83	0.015	99	99	85.4	0.15	1.10	15.456255	112.58	184.22	177.29	71.31	183.89	183	80	80	76		1.001	9.115	1027
970	157.706	157.156		0.16	0.16	1.34	1.08	0.26	91	90	76	2	1.5	83	0.016	95	96	85.5	-0.03	1.07	15.409791	112.52	184.07	177.12	71.25	183.77	181	80	80	76		1.001	8.939	1007
971	157.868	157.320		0.16	0.16	1.33	1.07	0.26	91	90	76	1.99	1.5	83	0.012	110	111	85.5	-0.04	1.04	15.4662066	112.49	183.98	176.99	71.18	183.67	178	80	80	76		1.001	8.635	972
972	158.030	157.483		0.16	0.16	1.33	1.07	0.26	91	90	76	1.99	1.5	82	0.017	92	93	85.5	0.04	1.09	15.4696093	112.41	183.92	176.96	71.18	183.59	176	80	80	76		1.001	9.105	1025
973	158.192	157.646		0.16	0.16	1.33	1.08	0.26	91	90	76	1.99	1.5	82	0.013	106	106	85.5	-0.04	1.09	15.4024782	112.36	183.79	176.78	71.14	183.50	174	80	80	76		1.001	9.099	1024
974	158.354	157.809		0.16	0.16	1.34	1.07	0.26	91	90	76	2	1.5	82	0.014	102	102	85.5	0.00	1.09	15.5558634	112.17	183.68	176.67	71.20	183.37	172	80	80	76		1.001	9.099	1022
975	158.515	157.972		0.16	0.16	1.33	1.08	0.26	91	90	76	2	1.5	82	0.016	95	96	85.2	0.28	1.04	15.5080547	112.01	183.53	176.58	71.21	183.22	170	80	80	76		1.001	8.614	966
976	158.677	158.136		0.16	0.16	1.33	1.07	0.26	91	90	76	1.99	1.5	82	0.014	102	103	85.5	-0.32	1.07	15.4222603	111.87	183.42	176.46	71.23	183.09	169	80	80	76		1.001	8.936	1001
977	158.839	158.299		0.16	0.16	1.33	1.07	0.26	91	90	76	2.01	1.5	82	0.015	98	99	85.2	0.35	1.07	15.4022236	111.75	183.29	176.60	71.23	182.99	167	80	80	76		1.001	8.936	1000
978	159.001	158.462		0.16	0.16	1.34	1.07	0.26	91	90	76	2	1.5	82	0.013	106	106	85.4	-0.15	1.07	15.4709902	111.56	183.16	176.24	71.28	182.84	165	80	80	76		1.001	8.938	998
979	159.163	158.625		0.16	0.16	1.34	1.08	0.26	91	90	76	2.01	1.5	82	0.015	98	99	85.3	0.08	1.09	15.4121647	111.38	183.02	176.17	71.34	182.72	164	79	80	76		1.001	9.102	1015

Elapsed Time	Particulate Sampling Data																		Fuel Weight, lb		Flow, gpm		Temperature Data, oF									Stack			
	Gas Meter Cubic Feet (1)	Gas Meter Cubic Feet (2)	Gas Meter Cubic Feet (amb)	Sample Rate, cfm (1)	Sample Rate, cfm (2)	Orifice dH (1)	Orifice dH (2)	Orifice dH (amb)	Meter oF (1)	Meter oF (2)	Meter oF (amb)	Meter Vac. In. Hg. (1)	Meter Vac. In. Hg. (2)	Dilution Tunnel Temp.	Dilution Tunnel dP	Pro. Rate (%) (1)	Pro. Rate (%) (2)	Scale Reading	Weight Change	Load Side Liquid Flow Rate	Boiler Side Liquid Flow Rate (optional)	Thermopile ΔT	Boiler to Heat Exch. Temp.	Heat Exch to Boiler Temp.	Inlet Load Temp.	Outlet Load Temp.	Stack	Filter (1)	Filter (2)	Ambient	Draft In. H2O	Specific Heat of Inlet Water (BTU/lb-°F)	Mass Flow Rate of Inlet Water (lb/min)	Heat Output, Btu
980	159.325	158.788		0.16	0.16	1.34	1.07	0.26	91	90	76	1.99	1.5	82	0.014	102	102	85.4	-0.09	1.09	15.4789095	111.23	182.87	176.03	71.33	182.56	162	79	80	76		1.001	9.099	1013
981	159.487	158.952		0.16	0.16	1.34	1.07	0.26	91	90	76	1.99	1.5	82	0.014	102	103	85.3	0.05	1.06	15.5078316	111.05	182.70	175.86	71.34	182.39	160	79	79	76		1.001	8.779	976
982	159.649	159.115		0.16	0.16	1.33	1.07	0.26	91	90	76	1.99	1.5	82	0.013	106	106	85.3	0.02	1.05	15.466855	110.92	182.56	175.71	71.32	182.24	159	79	79	76		1.001	8.775	974
983	159.811	159.277		0.16	0.16	1.33	1.07	0.26	91	90	76	2	1.5	82	0.014	102	102	85.3	0.02	1.11	15.5292511	110.74	182.39	175.55	71.36	182.10	158	79	79	76		1.001	9.263	1027
984	159.973	159.440		0.16	0.16	1.34	1.08	0.26	91	90	76	2.01	1.5	82	0.017	92	93	85.3	-0.01	1.07	15.4984884	110.53	182.23	175.39	71.40	181.94	156	79	79	76		1.001	8.939	989
985	160.135	159.604		0.16	0.16	1.33	1.07	0.26	91	90	76	1.99	1.5	82	0.014	102	103	85.4	-0.15	1.15	15.4682684	110.37	182.05	175.16	71.39	181.76	155	79	79	76		1.001	9.585	1059
986	160.297	159.768		0.16	0.16	1.33	1.07	0.26	91	90	76	2	1.5	82	0.015	98	99	85.3	0.15	1.09	15.4895239	110.21	181.88	175.01	71.38	181.59	154	79	79	76		1.001	9.102	1004
987	160.459	159.930		0.16	0.16	1.33	1.07	0.26	91	90	76	2	1.5	82	0.016	95	95	85.3	-0.01	1.07	15.3605518	110.06	181.71	174.84	71.36	181.41	152	79	79	76		1.001	8.937	985
988	160.620	160.093		0.16	0.16	1.33	1.07	0.26	91	90	76	2	1.5	82	0.017	92	93	85.4	-0.16	1.06	15.4405317	109.91	181.54	174.72	71.34	181.25	151	79	79	76		1.001	8.780	966
989	160.782	160.256		0.16	0.16	1.33	1.07	0.26	91	90	76	2	1.5	82	0.016	95	96	85.4	0.07	1.07	15.4892035	109.73	181.36	174.61	71.32	181.05	150	79	79	76		1.001	8.941	982
990	160.944	160.419		0.16	0.16	1.32	1.07	0.26	91	90	77	2	1.5	82	0.014	102	102	85.3	0.04	1.13	15.4257936	109.59	181.15	174.65	71.29	180.88	149	79	79	77		1.001	9.423	1034
991	161.106	160.583		0.16	0.16	1.33	1.07	0.26	91	90	76	1.99	1.5	82	0.014	102	103	85.3	0.07	1.09	15.4605637	109.39	180.97	174.25	71.27	180.66	148	79	79	76		1.001	9.108	997
992	161.268	160.746		0.16	0.16	1.33	1.07	0.26	91	90	76	1.99	1.5	82	0.014	102	102	85.4	-0.15	1.09	15.469532	109.24	180.81	174.08	71.25	180.49	147	79	79	76		1.001	9.100	995
993	161.430	160.909		0.16	0.16	1.33	1.07	0.26	91	90	76	2.01	1.5	82	0.015	98	99	85.4	0.03	1.09	15.5271149	109.12	180.59	174.19	71.19	180.31	146	79	79	76		1.001	9.041	988
994	161.592	161.071		0.16	0.16	1.32	1.08	0.26	91	90	77	2.01	1.5	82	0.015	98	98	85.2	0.14	1.04	15.4024944	108.99	180.41	173.98	71.13	180.12	145	79	79	77		1.001	8.616	940
995	161.754	161.235		0.16	0.16	1.32	1.07	0.26	91	90	77	1.99	1.5	82	0.014	102	103	85.4	-0.13	1.05	15.4222403	108.78	180.19	173.86	71.14	179.92	144	79	79	77		1.001	8.771	955
996	161.916	161.399		0.16	0.16	1.32	1.07	0.26	91	90	77	2.01	1.5	81	0.013	106	107	85.2	0.14	1.02	15.4695501	108.53	180.01	173.56	71.20	179.73	143	79	79	77		1.001	8.446	918
997	162.078	161.561		0.16	0.16	1.33	1.07	0.26	91	90	77	2.01	1.5	82	0.014	102	102	85.3	-0.03	1.03	15.5153713	108.39	179.81	173.71	71.16	179.54	142	79	79	77		1.001	8.610	934
998	162.240	161.724		0.16	0.16	1.33	1.07	0.26	91	90	78	2	1.5	82	0.016	95	96	85.5	-0.21	1.05	15.440671	108.19	179.62	173.50	71.14	179.33	142	79	79	78		1.001	8.771	950
999	162.401	161.887		0.16	0.16	1.32	1.08	0.26	91	90	77	2.01	1.5	82	0.015	98	99	85.3	0.13	1.05	15.3955688	108.03	179.43	173.12	71.12	179.15	141	79	79	77		1.001	8.765	948
1000	162.563	162.050		0.16	0.16	1.33	1.08	0.26	91	90	78	2	1.5	82	0.014	102	102	85.3	0.01	1.11	15.3553772	107.76	179.20	172.92	71.17	178.93	140	79	79	78		1.001	9.258	999
1001	162.726	162.214		0.16	0.16	1.32	1.07	0.26	91	90	78	2	1.5	82	0.016	96	96	85.4	-0.05	1.01	15.4989662	107.59	179.06	172.56	71.18	178.77	139	79	79	78		1.001	8.442	909
1002	162.887	162.377		0.16	0.16	1.33	1.07	0.26	91	90	78	2	1.5	82	0.015	98	99	85.3	0.08	1.09	15.3896084	107.34	178.82	172.47	71.21	178.54	138	79	79	78		1.001	9.094	977
1003	163.049	162.539		0.16	0.16	1.33	1.07	0.26	91	90	78	1.99	1.5	82	0.015	98	98	85.4	-0.06	1.03	15.4222755	107.16	178.63	172.24	71.18	178.34	137	79	79	78		1.001	8.608	924
1004	163.211	162.702		0.16	0.16	1.32	1.07	0.26	91	90	78	2.01	1.5	82	0.014	102	102	85.2	0.14	1.09	15.3930998	107.08	178.43	172.01	71.07	178.15	137	79	79	78		1.001	9.092	975
1005	163.372	162.865		0.16	0.16	1.32	1.07	0.26	91	90	78	1.99	1.5	82	0.017	92	93	85.3	-0.12	1.07	15.3930788	106.87	178.22	171.84	71.06	177.93	136	79	79	78		1.001	8.930	955
1006	163.534	163.029		0.16	0.16	1.32	1.07	0.26	91	90	78	2.01	1.5	82	0.013	106	107	85.4	-0.08	1.09	15.3839788	106.76	177.99	172.00	70.95	177.71	135	79	79	78		1.001	9.092	972
1007	163.696	163.191		0.16	0.16	1.33	1.07	0.26	91	90	77	2.01	1.5	82	0.014	102	102	85.3	0.11	1.03	15.4789	106.72	177.81	171.78	70.83	177.55	135	79	79	77		1.001	8.606	919
1008	163.858	163.354		0.16	0.16	1.33	1.07	0.26	91	90	78	2	1.5	82	0.016	95	96	85.4	-0.13	1.09	15.4509697	106.55	177.61	171.16	70.77	177.32	134	79	79	78		1.001	9.087	969
1009	164.019	163.517		0.16	0.16	1.32	1.07	0.26	91	90	78	2.01	1.5	82	0.013	105	106	85.3	0.17	1.05	15.3930521	106.41	177.39	171.08	70.70	177.11	134	79	79	78		1.001	8.768	934
1010	164.181	163.680		0.16	0.16	1.32	1.07	0.26	91	90	78	2.01	1.5	82	0.016	95	96	85.3	-0.05	1.05	15.4789562	106.33	177.15	170.74	70.55	176.88	133	79	79	78		1.001	8.758	932
1011	164.343	163.844		0.16	0.16	1.33	1.07	0.26	91	90	77	1.99	1.5	82	0.014	102	103	85.4	-0.10	1.05	15.3456802	106.16	176.95	170.53	70.51	176.66	133	79	79	77		1.001	8.775	933
1012	164.505	164.006		0.16	0.16	1.33	1.06	0.26	91	90	78	2.01	1.5	82	0.017	92	92	85.3	0.08	1.05	15.4026089	106.13	176.79	170.32	70.36	176.49	132	79	79	78		1.001	8.770	932
1013	164.666	164.169		0.16	0.16	1.33	1.07	0.26	91	90	78	2	1.5	82	0.014	101	102	85.4	-0.08	1.08	15.4311161	105.98	176.55	170.16	70.29	176.27	131	79	79	78		1.001	9.009	956
1014	164.828	164.332		0.16	0.16	1.33	1.07	0.26	91	90	77	2	1.5	82	0.014	102	102	85.4	0.06	1.04	15.3457775	105.81	176.21	169.80	70.17	175.98	131	79	79	77		1.001	8.650	916
1015	164.990	164.495		0.16	0.16	1.32	1.07	0.26	91	90	77	2	1.5	82	0.014	102	102	85.4	-0.03	1.06	15.4696455	105.82	176.04	169.65	69.95	175.76	130	79	79	77		1.001	8.782	930
1016	165.152	164.658		0.16	0.16	1.32	1.07	0.26	91	90	78	2.01	1.5	82	0.015	98	99	85.4	-0.04	1.07	15.4510174	105.70	175.80	169.47	69.82	175.52	130	79	79	78		1.001	8.932	945
1017	165.313	164.821		0.16	0.16	1.33	1.07	0.26	91	90	77	2.01	1.5	82	0.014	101	102	85.2	0.24	1.07	15.4509726	105.59	175.56	169.11	69.72	175.31	130	79	79	77		1.001	8.935	945
1018	165.475	164.983		0.16	0.16	1.33	1.07	0.26	91	90	78	2.01	1.5	82	0.014	102	102	85.4	-0.21	1.09	15.536726	105.51	175.36	168.93	69.57	175.08	129	79	79	78		1.001	9.093	961
1019	165.637	165.146		0.16	0.16	1.33	1.07	0.26	91	90	78	2.01	1.5	82	0.014	102	102	85.4	-0.02	1.01	15.3764229	105.46	175.19	168.79	69.45	174.91	129	79	79	78		1.001	8.442	891
1020	165.798	165.310		0.16	0.16	1.32	1.07	0.26	91	90	78	2	1.5	82	0.016	95	96	85.5	-0.11	1.03	15.4763021	105.31	174.89	168.52	69.32	174.63	129	79	79	78		1.001	8.605	907
1021	165.960	165.473		0.16	0.16	1.33	1.07	0.26	91	90	78	1.99	1.5	82	0.014	102	102	85.3	0.19	1.13	15.4026299	105.12	174.66	168.29	69.27	174.39	128	79	79	78		1.001	9.415	991
1022	166.122	165.635		0.16	0.16	1.33	1.06	0.26	91	90	79	2.01	1.5	82	0.016	95	95	85.4	-0.10	1.09	15.384078	105.02	174.43	167.80	69.15	174.17	141	79	79	79		1.001	9.091	956
1023	166.283	165.797		0.16	0.16	1.32	1.06	0.26	91	90	79	2.02	1.5	88	0.014	102	102	84.9	0.51	1.05	15.4564486	104.85	174.22	167.97	69.08	173.94	154	80	80	79		1.001	8.769	921
1024	166.445	165.960		0.16	0.16	1.33	1.07	0.26	91	90	79	2.01	1.5	84	0.014	102	103	85.2	-0.31	1.11	15.4025555	104.73	173.92	167.42	68.96	173.69	147	79	79	79		1.001	9.251	970
1025	166.607	166.124		0.16	0.16	1.33	1.07	0.26	91	90	79	2.01	1.5	83	0.014	102	103	84.9	0.28	1.01	15.451087	104.47	173.70	167.49	68.97	173.44	143	79	79	79		1.001	8.443	883
1026	166.768	166.286		0.16	0.16	1.33	1.07	0.26	91	90	79	2	1.5	83	0.016	95	95	84.9	0.07	1.13	15.4698009	104.37	173.54	167.05	68.89	173.26	139	80	80	79		1.001	9.417	984
1027	166.930	166.449		0.16	0.16	1.33	1.07	0.26	91	90	79	1.99	1.5	82	0.015	98	99	85.1	-0.23	1.03	15.4160986	104.22	173.30	166.87	68.80	173.02	136	80	80	79		1.001	8.603	898
1028	167.092	166.611		0.16	0.16	1.33	1.07	0.26	91	90	79	1.99	1.5	82	0.014	102	102	84.9	0.16	1.09	15.5082569	104.04	173.00	166.58	68.72	172.76	134	80	80	79		1.001	9.094	947
1029	167.254	166.774		0.16	0.16	1.33	1.07	0.26	91	90	79	1.99	1.5	82	0.015	98	99	85.1	-0.19	0.94	15.4188795	103.79	172.81	166.66	68.75	172.54	132	80	80	79		1.001	7.792	810
1030	167.416	166.938		0.16	0.16	1.33	1.07	0.26	91	90	79	2.01	1.5	82	0.014	102	103	85.0	0.15	1.09	15.4615278	103.62	172.54	166.04	68.66	172.28	131	80	80	79		1.001	9.092	943
1031	167.577	167.101		0.16	0.16	1.32	1.07	0.26	91	90	79	2.01	1.5	83	0.016	95	96	85.0	-0.03	1.09	15.4035463	103.37	172.34	165.92	68.74	172.11	130	80	80	79		1.001	9.090	941
1032	167.739	167.263		0.16	0.16	1.32	1.07	0.26	91	90	79	1.99	1.5	82	0.015	98	98	85.0	0.01	1.07	15.491622	103.14	172.09	165.70	68.69	171.83	128	80	80	79		1.001	8.926	922
1033	167.901	167.426		0.16	0.16	1.33	1.07	0.26	91	90	79	2	1.5	82	0.016	95	96	85.1	-0.08	1.13	15.3259821	102.97	171.92	165.49	68.66	171.63	127	80	80	79		1.001	9.414	971
1034	168.063	167.589		0.16	0.16	1.33	1.07	0.26	91	90	79	2.01	1.5	82	0.013	106	106	85.1	-0.01	1.11	15.3642206	102.72	171.66	165.21	68.69	171.41	126	80	80	79		1.001	9.232	949
1035	168.224	167.753		0.16	0.16	1.33	1.07	0.26	91	90	79	2.01	1.5	83	0.016	95	96	85.0	0.06	1.15	15.4126415	102.38	171.40	164.88	68.74	171.12	125	80	80	79		1.001	9.581	982
1036	168.386	167.916		0.16	0.16	1.32	1.07	0.26	91	90	79	2	1.5	82	0.017	92	93	85.0	0.02	1.12	15.4615259	102.10	171.16	164.70	68.79	170.90	124	80	80	79		1.001	9.344	955
1037	168.548	168.078		0.16	0.16	1.33	1.07	0.26	91	91	79	1.99	1.5	82	0.013	106	105	84.9	0.06	1.04	15.4052954	101.86	170.90	164.51	68.78	170.65	124	80	80	79		1.001	8.676	885
1038	168.710	168.241		0.16	0.16	1.33	1.07	0.26	91	91	79	2	1.5	82	0.016	95	96	85.0	-0.09	1.06	15.4409866	101.48	170.65	164.26	68.89	170.38	124	80	80	79		1.001	8.847	899
1039	168.871	168.404		0.16	0.16	1.33	1.07	0.26	91	91	79	1.99	1.5	82	0.016	95	96	84.9	0.10	1.09	15.3643084	101.18	170.40	164.07	68.95	170.14	123	80	80	79		1.001	9.042	916
1040	169.033	168.568		0.16	0.16	1.32	1.07	0.26	91	91	79	2	1.5	82	0.013	106	107	85.1	-0.21	1.09	15.4695959	100.91	170.18	163.78	68.99	169.90	123	80	80	79		1.001	9.052	915
1041	169.195	168.731		0.16	0.16	1.33	1.06	0.26	91	91	79	2	1.5	82	0.015	98	99	85.0	0.10	1.07	15.5276489	100.67	169.91	163.56	68.99	169.65	122	80	80	79		1.001	8.931	900

Elapsed Time	Particulate Sampling Data																	Fuel Weight, lb		Flow, gpm		Temperature Data, oF									Stack			
	Gas Meter Cubic Feet (1)	Gas Meter Cubic Feet (2)	Gas Meter Cubic Feet (amb)	Sample Rate, cfm (1)	Sample Rate, cfm (2)	Orifice dH (1)	Orifice dH (2)	Orifice dH (amb)	Meter oF (1)	Meter oF (2)	Meter oF (amb)	Meter Vac. In. Hg. (1)	Meter Vac. In. Hg. (2)	Dilution Tunnel Temp.	Dilution Tunnel dP	Pro. Rate (%) (1)	Pro. Rate (%) (2)	Scale Reading	Weight Change	Load Side Liquid Flow Rate	Boiler Side Liquid Flow Rate (optional)	Thermopile ΔT	Boiler to Heat Exch. Temp.	Heat Exch to Boiler Temp.	Inlet Load Temp.	Outlet Load Temp.	Stack	Filter (1)	Filter (2)	Ambient	Draft In. H2O	Specific Heat of Inlet Water (BTU/lb-°F)	Mass Flow Rate of Inlet Water (lb/min)	Heat Output, Btu
1042	169.357	168.894		0.16	0.16	1.33	1.07	0.26	91	91	79	1.99	1.5	82	0.015	98	99	85.0	0.02	1.11	15.4130344	100.41	169.65	163.36	69.00	169.41	122	80	80	79		1.001	9.242	929
1043	169.518	169.056		0.16	0.16	1.33	1.08	0.26	91	91	78	1.99	1.5	82	0.014	101	102	85.1	-0.06	1.13	15.3841009	100.07	169.43	163.13	69.09	169.16	122	80	80	78		1.001	9.416	943
1044	169.680	169.220		0.16	0.16	1.33	1.07	0.26	91	91	79	2.01	1.5	82	0.014	102	103	85.1	-0.03	1.03	15.4895029	99.84	169.17	162.92	69.10	168.93	122	80	80	79		1.001	8.607	860
1045	169.842	169.383		0.16	0.16	1.33	1.07	0.26	91	91	79	1.99	1.5	82	0.014	102	102	85.1	0.04	1.09	15.3999166	99.46	168.92	162.68	69.20	168.66	121	80	80	79		1.001	9.095	906
1046	170.004	169.546		0.16	0.16	1.33	1.07	0.26	91	91	78	1.99	1.5	82	0.013	106	106	85.1	-0.02	1.09	15.4304857	99.11	168.67	162.43	69.30	168.40	121	80	80	78		1.001	9.095	902
1047	170.165	169.709		0.16	0.16	1.33	1.07	0.26	91	91	79	1.99	1.5	82	0.016	95	96	85.0	0.10	1.05	15.4331198	98.85	168.43	162.23	69.34	168.19	120	80	80	79		1.001	8.769	868
1048	170.327	169.872		0.16	0.16	1.33	1.07	0.26	91	91	79	2.01	1.5	82	0.015	98	99	85.0	-0.03	1.05	15.4129353	98.53	168.11	162.00	69.39	167.92	119	80	80	79		1.001	8.772	865
1049	170.489	170.035		0.16	0.16	1.33	1.07	0.26	91	91	79	1.99	1.5	83	0.015	99	99	85.1	-0.10	1.15	15.5076981	98.30	167.98	162.26	69.44	167.74	119	80	80	79		1.001	9.578	943
1050	170.651	170.199		0.16	0.16	1.33	1.07	0.26	92	91	79	1.99	1.5	83	0.015	98	99	85.2	-0.07	1.09	15.4314413	98.06	167.76	161.57	69.43	167.49	118	80	80	79		1.001	9.090	892
1051	170.812	170.361		0.16	0.16	1.33	1.07	0.26	92	91	79	1.99	1.5	83	0.014	101	102	85.2	0.03	1.07	15.3709965	97.69	167.44	161.35	69.53	167.21	118	80	80	79		1.001	8.926	873
1052	170.974	170.524		0.16	0.16	1.33	1.07	0.26	92	91	79	2.01	1.5	83	0.014	102	102	85.1	0.11	0.98	15.4165335	97.43	167.26	161.18	69.60	167.03	119	80	80	79		1.001	8.121	792
1053	171.136	170.687		0.16	0.16	1.33	1.07	0.26	92	91	78	2	1.5	83	0.015	98	99	85.1	-0.01	1.07	15.451211	97.10	166.99	160.95	69.67	166.77	139	80	80	78		1.001	8.933	868
1054	171.298	170.850		0.16	0.16	1.33	1.07	0.26	92	91	78	2	1.5	87	0.015	99	99	84.9	0.13	1.15	15.4067354	96.72	166.70	160.71	69.74	166.46	143	80	80	78		1.001	9.580	928
1055	171.460	171.013		0.16	0.16	1.33	1.07	0.26	92	91	78	2	1.5	83	0.015	98	99	84.8	0.11	1.02	15.4699469	96.42	166.45	160.50	69.81	166.23	137	80	80	78		1.001	8.451	816
1056	171.621	171.176		0.16	0.16	1.33	1.07	0.26	92	91	78	2.01	1.5	82	0.016	95	96	84.9	-0.10	1.05	15.4026251	96.17	166.24	160.26	69.84	166.01	133	80	80	78		1.001	8.767	844
1057	171.783	171.338		0.16	0.16	1.33	1.07	0.26	92	91	78	2	1.5	82	0.016	95	95	84.7	0.21	1.06	15.4219761	95.97	166.07	160.10	69.85	165.83	130	80	80	78		1.001	8.778	843
1058	171.945	171.501		0.16	0.16	1.33	1.07	0.26	92	91	78	2	1.5	82	0.016	95	96	84.9	-0.16	1.09	15.4987249	95.60	165.78	159.81	69.95	165.55	128	80	80	78		1.001	9.098	871
1059	172.107	171.665		0.16	0.16	1.33	1.07	0.26	92	91	78	2.01	1.5	82	0.016	95	96	84.7	0.15	1.07	15.4786863	95.39	165.58	159.62	69.95	165.34	126	80	80	78		1.001	8.932	853
1060	172.269	171.828		0.16	0.16	1.33	1.07	0.26	92	91	78	1.99	1.5	82	0.014	102	102	84.7	0.06	1.06	15.3457279	95.22	165.30	159.60	69.88	165.09	124	80	80	78		1.001	8.782	837
1061	172.431	171.991		0.16	0.16	1.33	1.07	0.26	92	91	78	2	1.5	82	0.015	98	99	84.8	-0.11	1.13	15.4956121	94.88	165.09	159.15	69.99	164.87	123	80	80	78		1.001	9.394	892
1062	172.593	172.154		0.16	0.16	1.33	1.07	0.26	92	91	78	2.01	1.5	82	0.014	102	102	84.9	-0.12	1.11	15.3896427	94.56	164.82	158.95	70.00	164.56	123	80	80	78		1.001	9.202	871
1063	172.755	172.317		0.16	0.16	1.33	1.07	0.26	92	91	78	1.99	1.5	82	0.014	102	102	84.9	-0.02	1.06	15.413413	94.40	164.63	158.75	70.01	164.40	122	80	80	78		1.001	8.801	832
1064	172.917	172.480		0.16	0.16	1.33	1.07	0.26	92	91	78	1.99	1.5	82	0.014	102	102	84.9	0.00	1.13	15.3931332	94.12	164.36	158.54	70.03	164.15	121	80	80	78		1.001	9.434	889
1065	173.079	172.644		0.16	0.16	1.33	1.07	0.26	92	91	78	1.99	1.5	82	0.015	98	99	84.8	0.12	1.09	15.4128742	93.75	164.16	158.37	70.17	163.92	120	80	80	78		1.001	9.095	854
1066	173.241	172.807		0.16	0.16	1.33	1.07	0.26	92	91	78	2	1.5	82	0.015	98	99	84.7	0.07	1.09	15.4510603	93.51	163.91	158.13	70.17	163.68	119	80	80	78		1.001	9.092	851
1067	173.403	172.970		0.16	0.16	1.33	1.07	0.26	92	91	78	1.99	1.5	82	0.016	95	96	84.8	-0.08	1.11	15.4510489	93.26	163.68	157.87	70.17	163.44	119	80	80	78		1.001	9.258	864
1068	173.565	173.132		0.16	0.16	1.33	1.07	0.26	92	91	78	2	1.5	82	0.016	95	95	84.9	-0.06	1.09	15.4606218	92.93	163.47	157.74	70.31	163.24	118	80	80	78		1.001	9.093	846
1069	173.727	173.296		0.16	0.16	1.33	1.07	0.26	92	91	78	2	1.5	82	0.015	98	99	84.9	-0.06	1.11	15.4508553	92.69	163.23	157.54	70.32	163.01	118	80	80	78		1.001	9.254	859
1070	173.889	173.460		0.16	0.16	1.33	1.07	0.26	92	91	78	2.01	1.5	82	0.013	106	107	85.0	-0.04	1.13	15.3763876	92.44	162.99	157.32	70.32	162.75	117	80	80	78		1.001	9.420	872
1071	174.051	173.622		0.16	0.16	1.33	1.07	0.26	92	91	78	2.01	1.5	82	0.014	102	102	85.0	0.02	1.05	15.4585152	92.14	162.71	157.04	70.34	162.48	117	80	80	78		1.001	8.770	809
1072	174.213	173.785		0.16	0.16	1.33	1.07	0.26	92	91	78	1.99	1.5	82	0.015	98	99	84.9	0.09	1.13	15.4401798	91.88	162.51	156.84	70.39	162.28	117	80	80	78		1.001	9.418	866
1073	174.375	173.948		0.16	0.16	1.33	1.07	0.26	92	91	78	2	1.5	82	0.014	102	102	84.8	0.10	1.07	15.4513083	91.64	162.32	156.65	70.48	162.12	117	80	80	78		1.001	8.934	820
1074	174.537	174.111		0.16	0.16	1.32	1.06	0.26	92	91	78	2.01	1.5	89	0.016	96	96	84.9	-0.09	1.09	15.4778318	91.28	162.03	156.41	70.52	161.80	140	80	80	78		1.001	9.096	831
1075	174.699	174.274		0.16	0.16	1.33	1.06	0.26	92	91	78	2.02	1.5	92	0.015	99	100	84.5	0.37	1.09	15.3840179	91.01	161.80	156.15	70.54	161.55	155	80	80	78		1.001	9.092	828
1076	174.860	174.437		0.16	0.16	1.33	1.06	0.26	92	91	78	2.01	1.5	93	0.015	99	100	84.4	0.06	1.07	15.4606419	90.70	161.53	155.97	70.61	161.31	166	80	80	78		1.001	8.932	811
1077	175.022	174.599		0.16	0.16	1.33	1.07	0.26	92	91	78	2	1.5	95	0.014	103	103	83.9	0.49	1.11	15.5276709	90.51	161.44	155.86	70.68	161.19	176	81	81	78		1.001	9.254	838
1078	175.184	174.762		0.16	0.16	1.33	1.07	0.26	92	91	78	2	1.5	96	0.016	96	97	83.5	0.40	1.11	15.355463	90.36	161.33	155.75	70.71	161.07	187	81	81	78		1.001	9.253	837
1079	175.346	174.925		0.16	0.16	1.33	1.08	0.26	92	91	78	2	1.5	99	0.014	103	104	83.0	0.58	1.09	15.4875813	90.39	161.39	155.82	70.73	161.13	202	81	81	78		1.001	9.093	823
1080	175.507	175.088		0.16	0.16	1.34	1.08	0.26	92	91	79	2.01	1.5	103	0.016	96	97	82.4	0.53	1.11	15.4312382	90.59	161.66	156.00	70.78	161.36	218	81	82	79		1.001	9.254	839
1081	175.668	175.250		0.16	0.16	1.34	1.07	0.26	92	91	78	2.01	1.5	107	0.015	100	100	81.7	0.74	1.09	15.5209103	90.73	161.85	156.13	70.81	161.54	233	82	82	78		1.001	9.100	827
1082	175.830	175.412		0.16	0.16	1.34	1.08	0.26	92	91	78	2.02	1.5	109	0.016	98	97	81.0	0.70	1.13	15.414382	91.06	162.25	156.51	70.84	161.90	241	82	83	78		1.001	9.406	858
1083	175.991	175.574		0.16	0.16	1.33	1.08	0.26	92	91	79	2.02	1.5	111	0.016	97	97	80.3	0.72	1.05	15.4129438	91.79	163.05	157.24	70.86	162.66	247	83	83	79		1.001	8.775	806
1084	176.152	175.737		0.16	0.16	1.33	1.07	0.26	92	91	78	2.02	1.5	113	0.016	97	98	79.5	0.76	1.13	15.5173321	92.41	163.77	157.93	70.97	163.38	252	83	83	78		1.001	9.422	872
1085	176.313	175.898		0.16	0.16	1.33	1.07	0.26	92	91	78	2.03	1.5	114	0.017	94	94	79.0	0.56	1.07	15.3553257	93.15	164.48	158.58	70.98	164.13	256	83	84	78		1.001	8.934	833
1086	176.474	176.060		0.16	0.16	1.33	1.07	0.26	92	91	78	2.04	1.5	115	0.016	97	98	78.0	0.93	1.07	15.431592	93.65	165.04	159.51	71.02	164.66	259	84	84	78		1.001	8.931	837
1087	176.635	176.221		0.16	0.16	1.33	1.07	0.26	92	91	78	2.04	1.5	115	0.016	97	97	77.1	0.92	1.11	15.462224	94.32	165.81	159.97	71.11	165.44	261	84	85	78		1.001	9.254	874
1088	176.795	176.384		0.16	0.16	1.33	1.07	0.26	92	91	78	2.03	1.5	115	0.015	100	102	76.7	0.36	1.07	15.4910402	94.91	166.47	160.51	71.16	166.07	262	84	85	78		1.001	8.860	842
1089	176.956	176.545		0.16	0.16	1.33	1.06	0.26	92	91	78	2.04	1.5	115	0.015	101	100	75.9	0.83	1.19	15.4879189	95.78	167.43	161.45	71.20	166.98	262	85	85	78		1.001	9.896	949
1090	177.117	176.706		0.16	0.16	1.33	1.06	0.26	92	91	78	2.05	1.5	116	0.016	98	97	75.4	0.51	1.06	15.4410477	96.63	168.27	162.16	71.23	167.85	265	85	85	78		1.001	8.788	850
1091	177.278	176.868		0.16	0.16	1.33	1.06	0.26	92	91	78	2.04	1.5	117	0.016	98	98	74.7	0.75	1.05	15.460412	97.66	169.25	163.09	71.17	168.83	267	85	86	78		1.001	8.767	857
1092	177.438	177.029		0.16	0.16	1.32	1.05	0.26	92	91	78	2.04	1.5	118	0.014	104	104	73.8	0.82	1.11	15.5081263	98.62	170.39	164.05	71.26	169.88	269	86	86	78		1.001	9.261	914
1093	177.599	177.190		0.16	0.16	1.32	1.06	0.26	92	91	78	2.05	1.5	118	0.014	104	104	73.1	0.78	1.05	15.3648014	99.59	171.37	165.02	71.31	170.90	270	86	86	78		1.001	8.769	874
1094	177.760	177.351		0.16	0.16	1.33	1.06	0.26	92	91	78	2.05	1.5	117	0.016	98	97	72.6	0.46	1.07	15.4513035	100.68	172.47	166.23	71.31	171.99	271	86	87	78		1.001	8.932	900
1095	177.920	177.513		0.16	0.16	1.32	1.06	0.26	92	91	78	2.04	1.5	118	0.015	100	101	71.6	0.95	1.11	15.4028616	101.76	173.54	167.10	71.33	173.09	272	87	87	78		1.001	9.253	943
1096	178.081	177.673		0.16	0.16	1.32	1.05	0.26	92	91	78	2.04	1.5	118	0.015	101	100	70.9	0.73	1.13	15.4223347	102.74	174.48	168.00	71.31	174.05	272	87	87	78		1.001	9.415	968
1097	178.242	177.833		0.16	0.16	1.32	1.06	0.26	92	91	78	2.04	1.5	116	0.017	95	94	70.0	0.88	1.11	15.3931694	103.64	175.38	168.74	71.30	174.94	270	87	87	78		1.001	9.251	960
1098	178.402	177.995		0.16	0.16	1.32	1.06	0.26	92	91	78	2.06	1.5	117	0.014	104	105	69.0	1.01	1.13	15.3746452	104.51	176.16	169.52	71.26	175.77	271	87	87	78		1.001	9.418	985
1099	178.563	178.155		0.16	0.16	1.31	1.05	0.26	92	91	78	2.06	1.5	117	0.017	95	94	68.6	0.47	1.09	15.3746204	105.41	177.07	170.39	71.24	176.65	272	87	87	78		1.001	9.093	960
1100	178.723	178.315		0.16	0.16	1.31	1.05	0.26	92	91	78	2.07	1.5	119	0.016	97	97	68.1	0.49	1.09	15.4224377	106.42	178.11	171.33	71.24	177.65	274	88	88	78		1.001	9.091	969
1101	178.883	178.476		0.16	0.16	1.31	1.05	0.26	92	91	78	2.05	1.5	120	0.016	97	98	67.4	0.70	1.07	15.4026184	107.41	178.99	172.15	71.16	178.57	277	88	88	78		1.001	8.929	960
1102	179.044	178.636		0.16	0.16	1.31	1.04	0.26	92	91	78	2.06	1.5	120	0.017	95	94	66.6	0.73	1.09	15.4026203	108.34	180.09	173.16	71.25	179.58	279	88	88	78		1.001	9.089	986
1103	179.204	178.796		0.16	0.16	1.30	1.04	0.26	92	91	78	2.05	1.5	120	0.015	100	100	65.9	0.74	1.11	15.4133968	109.16	181.02	174.10	71.36	180.53	279	88	88	78		1.001	9.252	1011

Elapsed Time	Particulate Sampling Data																	Fuel Weight, lb		Flow, gpm		Temperature Data, oF									Stack			
	Gas Meter Cubic Feet (1)	Gas Meter Cubic Feet (2)	Gas Meter Cubic Feet (amb)	Sample Rate, cfm (1)	Sample Rate, cfm (2)	Orifice dH (1)	Orifice dH (2)	Orifice dH (amb)	Meter oF (1)	Meter oF (2)	Meter oF (amb)	Meter Vac. In. Hg. (1)	Meter Vac. In. Hg. (2)	Dilution Tunnel Temp.	Dilution Tunnel dP	Pro. Rate (%) (1)	Pro. Rate (%) (2)	Scale Reading	Weight Change	Load Side Liquid Flow Rate	Boiler Side Liquid Flow Rate (optional)	Thermopile ΔT	Boiler to Heat Exch. Temp.	Heat Exch to Boiler Temp.	Inlet Load Temp.	Outlet Load Temp.	Stack	Filter (1)	Filter (2)	Ambient	Draft In. H2O	Specific Heat of Inlet Water (BTU/lb-°F)	Mass Flow Rate of Inlet Water (lb/min)	Heat Output, Btu
1104	179.363	178.956		0.16	0.16	1.31	1.04	0.26	92	91	78	2.06	1.6	119	0.016	97	97	65.1	0.76	1.07	15.462184	110.12	181.95	174.99	71.37	181.49	278	88	88	78		1.001	8.926	984
1105	179.524	179.117		0.16	0.16	1.31	1.05	0.26	92	91	79	2.05	1.5	108	0.014	104	103	64.7	0.42	1.09	15.4222803	111.06	182.86	175.91	71.35	182.41	263	87	87	79		1.001	9.090	1011
1106	179.685	179.277		0.16	0.16	1.31	1.04	0.26	92	91	79	2.03	1.5	98	0.015	99	98	64.3	0.46	1.00	15.3932161	111.82	183.62	176.67	71.41	183.23	244	86	86	79		1.001	8.280	927
1107	179.845	179.437		0.16	0.16	1.31	1.04	0.26	92	91	79	2.03	1.5	94	0.014	102	101	63.9	0.34	1.09	15.3932276	112.26	184.06	177.15	71.42	183.68	232	85	85	79		1.001	9.082	1021
1108	180.006	179.599		0.16	0.16	1.31	1.04	0.26	92	91	79	2.02	1.5	92	0.016	95	96	63.6	0.30	1.06	15.4790964	112.29	184.08	177.09	71.46	183.75	224	85	85	79		1.001	8.854	995
1109	180.167	179.759		0.16	0.16	1.31	1.04	0.26	92	91	79	2.02	1.5	92	0.016	95	95	63.4	0.22	1.07	15.3854265	112.38	184.29	177.23	71.52	183.90	217	84	84	79		1.001	8.918	1003
1110	180.328	179.920		0.16	0.16	1.31	1.05	0.26	92	91	79	2.02	1.5	91	0.014	102	102	63.3	0.12	1.09	15.4094124	112.44	184.35	177.31	71.56	184.00	211	83	84	79		1.001	9.087	1023
1111	180.490	180.082		0.16	0.16	1.32	1.05	0.26	92	91	79	2.03	1.5	90	0.015	99	99	63.2	0.09	1.07	15.3931828	112.45	184.44	177.44	71.63	184.08	207	83	84	79		1.001	8.926	1005
1112	180.651	180.243		0.16	0.16	1.32	1.05	0.26	92	91	79	2.03	1.5	89	0.015	98	98	62.9	0.32	1.05	15.3840675	112.45	184.44	177.42	71.66	184.11	204	83	84	79		1.001	8.762	986
1113	180.812	180.404		0.16	0.16	1.32	1.05	0.26	92	91	79	2.03	1.5	89	0.013	106	105	62.8	0.04	1.05	15.3260345	112.49	184.51	177.56	71.69	184.18	200	83	84	79		1.001	8.772	988
1114	180.973	180.566		0.16	0.16	1.32	1.06	0.26	92	91	79	2.02	1.5	87	0.015	98	99	62.8	0.02	1.07	15.3554859	112.47	184.46	177.55	71.66	184.14	199	83	83	79		1.001	8.926	1005
1115	181.134	180.728		0.16	0.16	1.32	1.06	0.26	92	91	79	2.02	1.5	86	0.014	101	102	62.5	0.26	0.98	15.4296474	112.50	184.49	177.50	71.69	184.19	197	83	83	79		1.001	8.114	914
1116	181.296	180.891		0.16	0.16	1.32	1.06	0.26	92	91	79	2.01	1.5	86	0.016	96	96	62.4	0.16	1.07	15.4713106	112.40	184.48	177.56	71.74	184.14	195	83	83	79		1.001	8.921	1004
1117	181.457	181.053		0.16	0.16	1.32	1.06	0.26	92	91	79	2.01	1.5	86	0.012	110	110	62.5	-0.09	1.13	15.4008446	112.33	184.40	177.50	71.76	184.09	193	83	83	79		1.001	9.407	1058
1118	181.618	181.215		0.16	0.16	1.32	1.06	0.26	92	91	79	2.01	1.5	86	0.014	101	102	62.4	0.08	1.05	15.3887615	112.28	184.36	177.44	71.76	184.04	190	83	83	79		1.001	8.763	985
1119	181.780	181.378		0.16	0.16	1.32	1.06	0.26	92	91	79	2.01	1.5	85	0.016	95	96	62.3	0.14	1.09	15.3074903	112.19	184.30	177.68	71.80	183.98	188	82	83	79		1.001	9.084	1020
1120	181.941	181.541		0.16	0.16	1.32	1.06	0.26	92	91	79	2.02	1.5	85	0.014	101	102	62.3	-0.06	1.07	15.4411068	112.12	184.21	177.29	71.75	183.88	185	82	83	79		1.001	8.920	1001
1121	182.103	181.703		0.16	0.16	1.32	1.06	0.26	92	91	79	2.02	1.5	85	0.014	102	102	62.3	0.02	1.11	15.3931446	112.03	184.13	177.26	71.78	183.81	183	82	83	79		1.001	9.246	1037
1122	182.264	181.865		0.16	0.16	1.32	1.06	0.26	92	91	79	2.01	1.5	85	0.014	101	102	62.3	0.03	1.11	15.4026184	111.88	184.01	177.14	71.82	183.70	181	82	83	79		1.001	9.248	1036
1123	182.426	182.028		0.16	0.16	1.32	1.07	0.26	92	91	79	2.02	1.5	85	0.013	106	106	62.3	-0.07	1.07	15.4311972	111.82	183.91	177.06	71.77	183.59	178	82	82	79		1.001	8.923	999
1124	182.587	182.191		0.16	0.16	1.32	1.07	0.26	92	91	79	2.01	1.5	85	0.014	101	102	62.3	0.03	1.11	15.3840036	111.73	183.81	177.03	71.77	183.50	176	82	82	79		1.001	9.250	1035
1125	182.749	182.353		0.16	0.16	1.32	1.06	0.26	92	91	79	2	1.5	85	0.016	95	95	62.4	-0.10	1.09	15.4513626	111.62	183.70	176.90	71.77	183.40	174	82	82	79		1.001	9.086	1015
1126	182.910	182.515		0.16	0.16	1.32	1.06	0.26	92	91	79	2.02	1.5	85	0.014	101	102	62.3	0.15	1.07	15.4410706	111.52	183.59	176.79	71.75	183.28	172	82	82	79		1.001	8.922	996
1127	183.072	182.678		0.16	0.16	1.32	1.06	0.26	92	91	79	2.02	1.5	85	0.014	102	102	62.3	-0.02	1.09	15.3551884	111.42	183.48	176.65	71.73	183.15	171	82	82	79		1.001	9.081	1013
1128	183.233	182.840		0.16	0.16	1.32	1.06	0.26	92	91	79	2.01	1.5	85	0.014	101	102	62.4	-0.07	1.07	15.4773788	111.36	183.35	176.53	71.68	183.05	169	82	82	79		1.001	8.925	995
1129	183.395	183.004		0.16	0.16	1.32	1.06	0.26	92	91	79	2.02	1.5	85	0.013	106	107	62.3	0.04	1.09	15.3195505	111.26	183.23	176.42	71.66	182.92	167	82	82	79		1.001	9.077	1011
1130	183.556	183.166		0.16	0.16	1.32	1.06	0.26	92	91	79	2.02	1.5	85	0.015	98	98	62.3	-0.03	1.11	15.3875532	111.11	183.07	176.25	71.64	182.75	165	82	82	79		1.001	9.239	1028
1131	183.718	183.328		0.16	0.16	1.32	1.06	0.26	92	91	79	2.01	1.5	85	0.015	99	98	62.4	-0.06	1.07	15.3397789	111.06	182.92	176.17	71.56	182.62	164	82	82	79		1.001	8.920	992
1132	183.879	183.491		0.16	0.16	1.32	1.06	0.26	92	91	79	2.01	1.5	85	0.013	105	106	62.2	0.17	1.02	15.3840942	110.86	182.78	176.05	71.61	182.47	162	81	82	79		1.001	8.467	940
1133	184.041	183.654		0.16	0.16	1.32	1.06	0.26	92	91	79	2.01	1.5	85	0.015	99	99	62.4	-0.19	1.09	15.4411087	110.69	182.67	175.88	71.66	182.35	161	81	82	79		1.001	9.032	1001
1134	184.202	183.816		0.16	0.16	1.32	1.06	0.26	92	91	79	2.01	1.5	84	0.017	92	92	62.3	0.09	1.04	15.4697647	110.61	182.51	175.93	71.59	182.20	159	81	82	79		1.001	8.631	956
1135	184.364	183.978		0.16	0.16	1.32	1.06	0.26	92	91	79	2.01	1.5	84	0.016	95	95	62.4	-0.10	1.09	15.5080185	110.46	182.33	175.61	71.57	182.04	158	81	82	79		1.001	9.057	1002
1136	184.525	184.141		0.16	0.16	1.32	1.07	0.26	92	91	79	2	1.5	84	0.016	95	96	62.4	0.01	1.09	15.4514027	110.32	182.14	175.34	71.52	181.85	156	81	82	79		1.001	9.070	1002
1137	184.687	184.303		0.16	0.16	1.32	1.06	0.26	92	91	79	2	1.5	84	0.016	95	95	62.4	0.02	1.12	15.4224806	110.04	181.97	175.22	71.63	181.67	155	81	82	79		1.001	9.325	1027
1138	184.849	184.467		0.16	0.16	1.32	1.06	0.26	92	91	79	2.01	1.5	84	0.015	98	99	62.3	0.05	1.05	15.4222107	109.80	181.76	175.05	71.70	181.50	154	81	82	79		1.001	8.758	963
1139	185.010	184.629		0.16	0.16	1.32	1.06	0.26	92	91	79	2.01	1.5	84	0.014	101	102	62.3	0.02	1.05	15.3435106	109.59	181.59	175.20	71.72	181.31	153	81	82	79		1.001	8.759	961
1140	185.171	184.791		0.16	0.16	1.32	1.06	0.26	92	91	79	2.02	1.5	84	0.014	101	102	62.4	-0.03	1.15	15.4488249	109.38	181.40	174.78	71.75	181.13	151	81	81	79		1.001	9.571	1048
1141	185.333	184.954		0.16	0.16	1.32	1.06	0.26	92	91	79	2	1.5	84	0.013	106	106	62.3	0.04	1.09	15.4432268	109.15	181.24	174.60	71.80	180.96	150	81	82	79		1.001	9.080	992
1142	185.494	185.117		0.16	0.16	1.32	1.06	0.26	92	91	80	2.01	1.5	84	0.014	101	102	62.4	-0.07	1.05	15.4127951	108.98	181.08	174.33	71.80	180.78	149	81	81	80		1.001	8.759	956
1143	185.656	185.279		0.16	0.16	1.32	1.06	0.26	92	91	79	2	1.5	84	0.016	95	95	62.4	-0.04	1.11	15.3571014	108.71	180.84	174.14	71.85	180.56	148	81	81	79		1.001	9.245	1006
1144	185.817	185.441		0.16	0.16	1.32	1.06	0.26	92	91	79	2.01	1.5	84	0.016	95	95	62.4	0.04	1.07	15.3553505	108.46	180.66	173.96	71.89	180.35	148	81	81	79		1.001	8.924	969
1145	185.979	185.604		0.16	0.16	1.32	1.07	0.26	92	91	79	2.01	1.5	84	0.015	98	99	62.5	-0.06	1.11	15.4026403	108.24	180.47	173.79	71.92	180.17	147	81	81	79		1.001	9.249	1002
1146	186.140	185.766		0.16	0.16	1.32	1.06	0.26	92	91	79	2.01	1.5	84	0.014	101	102	62.3	0.16	1.11	15.4699335	108.02	180.22	173.54	71.90	179.92	146	81	81	79		1.001	9.245	1000
1147	186.302	185.930		0.16	0.16	1.32	1.06	0.26	92	91	79	2	1.5	84	0.014	102	103	62.5	-0.19	1.03	15.4699354	107.89	180.07	173.34	71.87	179.75	145	81	81	79		1.001	8.602	929
1148	186.463	186.092		0.16	0.16	1.32	1.06	0.26	92	91	79	2.02	1.5	84	0.015	98	98	62.7	-0.21	1.09	15.402648	107.71	179.88	173.26	71.89	179.60	144	81	81	79		1.001	9.086	980
1149	186.625	186.254		0.16	0.16	1.32	1.06	0.26	92	91	79	2.01	1.5	84	0.014	102	102	62.5	0.20	1.11	15.4696026	107.55	179.68	173.06	71.86	179.41	143	81	81	79		1.001	9.246	995
1150	186.786	186.416		0.16	0.16	1.32	1.06	0.26	92	91	79	2.01	1.5	84	0.014	101	102	62.6	-0.07	1.05	15.3841028	107.31	179.46	172.76	71.86	179.17	143	81	81	79		1.001	8.758	941
1151	186.948	186.579		0.16	0.16	1.31	1.06	0.26	92	92	80	2.02	1.5	84	0.014	102	102	62.6	0.00	1.00	15.4607058	107.22	179.24	172.89	71.76	178.98	142	81	81	80		1.001	8.277	888
1152	187.109	186.742		0.16	0.16	1.32	1.06	0.26	92	91	80	2.02	1.5	84	0.014	101	102	62.5	0.04	1.03	15.4451694	106.96	179.00	172.43	71.75	178.71	141	81	81	80		1.001	8.604	921
1153	187.271	186.904		0.16	0.16	1.32	1.06	0.26	92	91	80	2.01	1.5	84	0.013	106	106	62.6	-0.07	1.09	15.4608746	106.81	178.83	172.29	71.74	178.55	140	81	81	80		1.001	9.069	970
1154	187.432	187.066		0.16	0.16	1.32	1.06	0.26	92	92	80	2.01	1.5	84	0.014	101	102	62.5	0.07	1.03	15.4026299	106.62	178.61	172.08	71.71	178.33	140	81	81	80		1.001	8.603	918
1155	187.594	187.229		0.16	0.16	1.32	1.06	0.26	92	92	80	2.01	1.5	84	0.013	106	106	62.5	0.01	1.08	15.4784336	106.42	178.36	171.93	71.68	178.10	139	81	81	80		1.001	9.009	960
1156	187.755	187.392		0.16	0.16	1.32	1.06	0.26	92	92	80	2.01	1.5	84	0.017	92	93	62.5	-0.02	1.11	15.4696808	106.23	178.22	171.81	71.70	177.93	138	81	81	80		1.001	9.246	983
1157	187.917	187.554		0.16	0.16	1.32	1.06	0.26	92	92	80	2.02	1.5	84	0.013	106	105	62.7	-0.13	1.07	15.3746653	105.87	177.93	171.55	71.76	177.63	138	81	81	80		1.001	8.911	944
1158	188.078	187.716		0.16	0.16	1.32	1.06	0.26	92	92	80	2.02	1.5	84	0.014	101	102	62.5	0.16	1.13	15.4791145	105.76	177.72	171.30	71.69	177.45	137	81	81	80		1.001	9.406	996
1159	188.240	187.879		0.16	0.16	1.32	1.06	0.26	92	92	80	2.01	1.5	84	0.014	102	102	62.5	-0.02	1.07	15.413043	105.38	177.48	171.07	71.81	177.18	136	81	81	80		1.001	8.918	941
1160	188.401	188.042		0.16	0.16	1.32	1.06	0.26	92	92	80	2.02	1.5	84	0.015	98	99	62.5	0.01	1.05	15.4933863	105.19	177.27	170.89	71.80	176.99	136	81	81	80		1.001	8.741	921
1161	188.563	188.204		0.16	0.16	1.32	1.06	0.26	92	92	80	2.01	1.5	84	0.016	95	95	62.6	-0.10	1.09	15.4026613	105.00	177.07	170.68	71.79	176.79	135	81	81	80		1.001	9.080	954
1162	188.724	188.366		0.16	0.16	1.32	1.06	0.26	93	92	80	2.02	1.5	84	0.013	105	105	62.8	-0.18	1.09	15.4561148	104.71	176.83	170.39	71.83	176.54	134	81	81	80		1.001	9.079	952
1163	188.886	188.528		0.16	0.16	1.32	1.06	0.26	93	92	80	2	1.5	84	0.013	106	105	62.6	0.15	1.11	15.3868437	104.52	176.62	170.22	71.81	176.33	133	81	81	80		1.001	9.240	967
1164	189.047	188.691		0.16	0.16	1.32	1.06	0.26	93	92	80	2.03	1.5	84	0.014	101	102	62.7	-0.10	1.07	15.4373341	104.31	176.41	169.92	71.80	176.12	133	81	81	80		1.001	8.923	932
1165	189.209	188.854		0.16	0.16	1.32	1.06	0.26	93	92	80	2.02	1.5	84	0.015	98	99	62.6	0.11	1.07	15.4061136	104.07	176.16	169.76	71.82	175.89	132	81	81	80		1.001	8.922	930

Elapsed Time	Particulate Sampling Data																	Fuel Weight, lb		Flow, gpm		Temperature Data, oF									Stack			
	Gas Meter Cubic Feet (1)	Gas Meter Cubic Feet (2)	Gas Meter Cubic Feet (amb)	Sample Rate, cfm (1)	Sample Rate, cfm (2)	Orifice dH (1)	Orifice dH (2)	Orifice dH (amb)	Meter oF (1)	Meter oF (2)	Meter oF (amb)	Meter Vac. In. Hg. (1)	Meter Vac. In. Hg. (2)	Dilution Tunnel Temp.	Dilution Tunnel dP	Pro. Rate (%) (1)	Pro. Rate (%) (2)	Scale Reading	Weight Change	Load Side Liquid Flow Rate	Boiler Side Liquid Flow Rate (optional)	Thermopile ΔT	Boiler to Heat Exch. Temp.	Heat Exch to Boiler Temp.	Inlet Load Temp.	Outlet Load Temp.	Stack	Filter (1)	Filter (2)	Ambient	Draft In. H2O	Specific Heat of Inlet Water (BTU/lb-°F)	Mass Flow Rate of Inlet Water (lb/min)	Heat Output, Btu
1166	189.370	189.016		0.16	0.16	1.32	1.06	0.26	93	92	80	2.01	1.5	84	0.017	92	92	62.7	-0.07	1.11	15.4893656	103.80	175.95	169.59	71.88	175.68	131	81	81	80		1.001	9.250	961
1167	189.532	189.178		0.16	0.16	1.32	1.06	0.26	93	92	80	2.02	1.5	84	0.014	102	102	62.6	0.12	1.03	15.3841105	103.49	175.69	169.34	71.93	175.42	131	81	81	80		1.001	8.600	891
1168	189.693	189.341		0.16	0.16	1.32	1.06	0.26	93	92	80	2.02	1.5	84	0.016	95	96	62.5	0.07	1.09	15.3171415	103.25	175.47	169.31	71.95	175.20	131	81	81	80		1.001	9.077	938
1169	189.855	189.504		0.16	0.16	1.32	1.06	0.26	93	92	80	2.02	1.5	84	0.017	92	93	62.5	0.01	1.13	15.4224272	103.04	175.27	168.89	71.95	174.99	130	81	81	80		1.001	9.405	970
1170	190.016	189.666		0.16	0.16	1.32	1.06	0.26	93	92	80	2.01	1.5	84	0.014	101	102	62.5	0.04	1.11	15.3746881	102.77	174.96	168.60	71.95	174.72	129	81	81	80		1.001	9.244	951
1171	190.178	189.828		0.16	0.16	1.32	1.06	0.26	93	92	80	2.01	1.5	84	0.015	98	98	62.5	-0.01	1.09	15.4607868	102.63	174.78	168.51	71.89	174.52	129	81	81	80		1.001	9.082	933
1172	190.339	189.990		0.16	0.16	1.32	1.06	0.26	93	92	80	2.01	1.5	84	0.014	101	102	62.8	-0.30	1.11	15.4200401	102.30	174.51	168.21	71.94	174.24	128	81	81	80		1.001	9.243	947
1173	190.501	190.153		0.16	0.16	1.32	1.06	0.26	93	92	80	2.02	1.5	84	0.013	106	106	62.7	0.08	1.11	15.4410429	102.07	174.31	168.00	71.97	174.04	128	81	81	80		1.001	9.239	944
1174	190.662	190.316		0.16	0.16	1.31	1.05	0.26	93	92	80	2.02	1.5	87	0.014	101	102	62.7	0.03	1.05	15.3746967	101.79	174.06	167.80	72.02	173.81	152	81	82	80		1.001	8.757	892
1175	190.823	190.477		0.16	0.16	1.32	1.06	0.26	93	92	80	2.02	1.5	88	0.016	95	95	62.3	0.38	1.13	15.4890499	101.52	173.82	167.53	72.04	173.55	153	82	82	80		1.001	9.407	956
1176	190.985	190.639		0.16	0.16	1.32	1.06	0.26	93	92	80	2	1.5	85	0.015	98	98	62.3	-0.02	1.11	15.4316816	101.34	173.62	167.27	72.03	173.37	147	82	82	80		1.001	9.243	938
1177	191.146	190.802		0.16	0.16	1.32	1.06	0.26	93	92	80	2.01	1.5	85	0.014	101	102	62.3	0.04	1.13	15.4240313	101.11	173.42	167.10	72.03	173.14	142	82	82	80		1.001	9.403	952
1178	191.308	190.965		0.16	0.16	1.32	1.06	0.26	93	92	80	2.01	1.5	85	0.015	98	99	62.3	0.01	1.11	15.3747177	100.87	173.16	166.85	72.01	172.88	139	82	82	80		1.001	9.245	934
1179	191.469	191.127		0.16	0.16	1.32	1.06	0.26	93	92	80	2.02	1.5	85	0.013	105	105	62.3	-0.06	1.05	15.4513693	100.72	172.91	166.68	71.95	172.67	137	82	82	80		1.001	8.765	884
1180	191.631	191.290		0.16	0.16	1.32	1.06	0.26	93	92	80	2.01	1.5	85	0.014	102	102	62.3	0.03	1.15	15.4410973	100.45	172.67	166.39	71.96	172.41	134	82	82	80		1.001	9.590	964
1181	191.792	191.452		0.16	0.16	1.32	1.06	0.26	93	92	80	2.01	1.5	84	0.016	95	95	62.4	-0.11	1.05	15.534709	100.27	172.47	166.28	71.94	172.21	132	82	82	80		1.001	8.755	879
1182	191.954	191.615		0.16	0.16	1.32	1.07	0.26	93	92	80	2.01	1.5	85	0.014	102	102	62.4	0.04	1.09	15.4027243	100.06	172.29	166.11	71.96	172.02	131	82	82	80		1.001	9.037	905
1183	192.116	191.778		0.16	0.16	1.32	1.06	0.26	93	92	80	2	1.5	84	0.014	102	102	62.5	-0.14	1.07	15.6129541	99.81	172.01	165.83	71.96	171.78	130	82	82	80		1.001	8.861	885
1184	192.277	191.939		0.16	0.16	1.32	1.06	0.26	93	92	80	2.01	1.5	85	0.014	101	101	62.3	0.18	1.08	15.4696989	99.56	171.79	165.61	71.99	171.55	129	82	82	80		1.001	8.972	894
1185	192.439	192.102		0.16	0.16	1.32	1.06	0.26	93	92	80	2.02	1.5	84	0.016	95	96	62.3	0.01	1.11	15.4145098	99.30	171.58	165.42	72.00	171.31	128	82	82	80		1.001	9.245	919
1186	192.600	192.264		0.16	0.16	1.32	1.06	0.26	93	92	80	2.02	1.5	84	0.014	101	102	62.3	-0.02	1.15	15.4242315	99.05	171.31	165.19	71.99	171.04	127	82	82	80		1.001	9.570	949
1187	192.762	192.428		0.16	0.16	1.32	1.06	0.26	93	92	80	2.01	1.5	85	0.014	102	103	62.4	-0.02	1.13	15.4682999	98.81	171.11	165.01	72.02	170.83	126	82	82	80		1.001	9.409	931
1188	192.923	192.590		0.16	0.16	1.32	1.06	0.26	93	92	80	2	1.5	84	0.014	101	102	62.5	-0.15	1.09	15.4514933	98.53	170.84	164.74	72.01	170.55	126	82	82	80		1.001	9.083	896
1189	193.085	192.752		0.16	0.16	1.32	1.06	0.26	93	92	80	2.01	1.5	85	0.013	106	105	62.5	0.05	1.11	15.4509497	98.37	170.62	164.57	72.02	170.40	125	82	82	80		1.001	9.246	911
1190	193.247	192.915		0.16	0.16	1.32	1.07	0.26	93	92	80	2.02	1.5	85	0.014	102	102	62.1	0.35	1.07	15.4223957	98.09	170.37	164.28	72.02	170.11	124	82	82	80		1.001	8.921	876
1191	193.408	193.078		0.16	0.16	1.32	1.06	0.26	93	92	80	2.01	1.5	84	0.015	98	99	62.5	-0.39	1.03	15.3747511	97.88	170.13	164.49	72.01	169.89	124	82	82	80		1.001	8.597	842
1192	193.570	193.240		0.16	0.16	1.32	1.06	0.26	93	92	80	2.01	1.5	84	0.013	106	105	62.3	0.21	1.09	15.3643417	97.59	169.91	163.95	72.08	169.67	124	82	82	80		1.001	9.080	887
1193	193.731	193.402		0.16	0.16	1.32	1.06	0.26	93	92	80	2.01	1.5	84	0.013	105	105	62.5	-0.18	1.09	15.4696541	97.40	169.76	163.83	72.10	169.49	123	82	82	80		1.001	9.082	886
1194	193.893	193.565		0.16	0.16	1.32	1.06	0.26	93	92	80	2	1.5	84	0.013	106	106	62.4	0.08	1.13	15.4131269	97.11	169.49	163.56	72.13	169.25	122	82	82	80		1.001	9.406	914
1195	194.055	193.727		0.16	0.16	1.32	1.06	0.26	93	92	80	2.01	1.5	84	0.014	102	102	62.6	-0.20	1.07	15.4513016	96.84	169.27	163.34	72.16	169.00	122	82	82	80		1.001	8.921	865
1196	194.216	193.891		0.16	0.16	1.32	1.06	0.26	93	92	80	2.01	1.5	84	0.015	98	99	62.6	-0.01	1.13	15.4237137	96.65	169.08	163.21	72.18	168.83	122	82	82	80		1.001	9.406	910
1197	194.378	194.053		0.16	0.16	1.32	1.06	0.26	93	92	80	2	1.5	84	0.014	102	102	62.4	0.16	1.11	15.4990692	96.33	168.79	162.89	72.20	168.53	122	82	82	80		1.001	9.245	892
1198	194.540	194.215		0.16	0.16	1.32	1.06	0.26	93	92	80	2.01	1.5	84	0.015	98	98	62.4	0.00	1.03	15.431448	96.11	168.55	162.73	72.21	168.32	121	82	82	80		1.001	8.594	827
1199	194.701	194.377		0.16	0.16	1.32	1.07	0.26	93	92	81	2.02	1.5	85	0.014	101	102	62.4	0.04	1.05	15.4215097	95.81	168.28	162.68	72.23	168.05	121	82	82	81		1.001	8.762	840
1200	194.863	194.540		0.16	0.16	1.32	1.06	0.26	93	92	80	2.02	1.5	85	0.014	102	102	62.4	-0.04	1.15	15.3841734	95.65	168.06	162.27	72.19	167.85	121	82	82	80		1.001	9.566	916
1201	195.025	194.703		0.16	0.16	1.32	1.06	0.26	93	92	80	2.01	1.5	84	0.014	102	102	62.5	-0.07	1.09	15.507103	95.39	167.87	162.04	72.24	167.63	120	82	82	80		1.001	9.080	867
1202	195.186	194.865		0.16	0.16	1.32	1.06	0.26	93	92	80	2.02	1.5	84	0.014	101	102	62.3	0.16	1.09	15.3829288	95.09	167.56	161.81	72.24	167.34	120	82	82	80		1.001	9.084	865
1203	195.348	195.027		0.16	0.16	1.32	1.06	0.26	93	92	81	2	1.5	85	0.014	102	102	62.5	-0.13	1.05	15.470603	94.93	167.37	161.60	72.19	167.13	121	82	82	81		1.001	8.732	830
1204	195.509	195.190		0.16	0.16	1.32	1.06	0.26	93	92	81	2.01	1.5	84	0.015	98	99	62.4	0.05	1.05	15.4377594	94.75	167.15	161.39	72.16	166.90	120	82	82	81		1.001	8.718	827
1205	195.671	195.353		0.16	0.16	1.31	1.05	0.26	93	92	80	2.03	1.5	89	0.016	96	96	62.4	-0.02	1.12	15.5369244	94.50	166.93	161.13	72.16	166.66	141	82	83	80		1.001	9.299	880
1206	195.832	195.515		0.16	0.16	1.32	1.06	0.26	93	92	81	2.01	1.5	88	0.016	95	95	62.3	0.10	1.06	15.3715191	94.31	166.68	160.89	72.14	166.44	143	82	82	81		1.001	8.791	830
1207	195.994	195.677		0.16	0.16	1.32	1.06	0.26	93	92	81	2.02	1.5	86	0.014	102	102	62.1	0.19	0.98	15.42208	94.04	166.42	161.06	72.16	166.20	137	82	82	81		1.001	8.112	764
1208	196.156	195.840		0.16	0.16	1.32	1.06	0.26	93	93	81	2.01	1.5	85	0.014	102	102	62.2	-0.09	1.09	15.4608049	93.81	166.21	160.51	72.16	165.97	133	82	82	81		1.001	9.104	855
1209	196.317	196.003		0.16	0.16	1.32	1.06	0.26	93	93	81	2	1.5	85	0.015	98	99	62.2	0.02	1.01	15.3747511	93.66	166.03	160.66	72.12	165.78	130	82	82	81		1.001	8.429	790
1210	196.479	196.165		0.16	0.16	1.32	1.05	0.26	93	93	81	2	1.5	85	0.016	95	95	62.3	-0.11	1.07	15.4131269	93.44	165.77	160.06	72.09	165.52	128	82	82	81		1.001	8.916	834
1211	196.640	196.327		0.16	0.16	1.32	1.06	0.26	93	93	81	2	1.5	85	0.015	98	98	62.1	0.21	1.13	15.4794731	93.26	165.55	159.81	72.06	165.32	126	82	82	81		1.001	9.402	878
1212	196.802	196.489		0.16	0.16	1.32	1.06	0.26	93	93	81	2.02	1.5	85	0.016	95	95	62.0	0.09	1.11	15.4131269	92.99	165.33	159.58	72.08	165.06	124	82	82	81		1.001	9.242	860
1213	196.964	196.652		0.16	0.16	1.32	1.06	0.26	93	93	80	2.02	1.5	85	0.013	106	106	62.4	-0.34	1.05	15.4410973	92.76	165.09	159.35	72.10	164.86	124	82	82	80		1.001	8.755	813
1214	197.125	196.815		0.16	0.16	1.32	1.06	0.26	93	93	81	2.02	1.5	85	0.015	98	99	62.2	0.15	1.09	15.4209194	92.54	164.91	159.16	72.13	164.68	122	82	82	81		1.001	9.077	841
1215	197.286	196.977		0.16	0.16	1.32	1.06	0.26	93	93	81	2.01	1.5	85	0.014	101	101	62.3	-0.04	1.09	15.4318171	92.24	164.71	158.98	72.23	164.47	122	82	82	81		1.001	9.078	838
1216	197.448	197.140		0.16	0.16	1.32	1.06	0.26	93	93	81	2	1.5	85	0.016	95	95	62.1	0.21	1.11	15.4285383	92.01	164.51	158.77	72.25	164.26	122	82	82	81		1.001	9.241	851
1217	197.610	197.302		0.16	0.16	1.32	1.06	0.26	93	93	81	2.02	1.5	85	0.014	102	101	62.1	0.01	1.01	15.3747807	91.74	164.17	158.44	72.22	163.96	121	82	82	81		1.001	8.429	774
1218	197.771	197.465		0.16	0.16	1.32	1.06	0.26	93	93	81	2.01	1.5	85	0.015	98	99	62.3	-0.20	1.05	15.4224377	91.63	164.01	158.39	72.17	163.80	121	82	82	81		1.001	8.757	803
1219	197.933	197.628		0.16	0.16	1.32	1.06	0.26	93	93	81	2.01	1.5	85	0.014	102	102	62.2	0.10	1.01	15.4792833	91.47	163.84	158.14	72.12	163.59	120	82	82	81		1.001	8.433	772
1220	198.095	197.790		0.16	0.16	1.32	1.06	0.26	93	93	81	2.01	1.5	85	0.015	98	98	62.1	0.05	1.03	15.4028931	91.32	163.57	157.92	72.04	163.36	119	82	82	81		1.001	8.593	786
1221	198.256	197.952		0.16	0.16	1.32	1.06	0.26	93	93	81	2.01	1.5	85	0.015	98	98	62.2	-0.06	1.07	15.3619986	90.99	163.29	157.64	72.06	163.05	119	82	82	81		1.001	8.914	812
1222	198.418	198.115		0.16	0.16	1.32	1.06	0.26	93	93	81	2.01	1.5	85	0.016	95	95	62.2	-0.08	1.09	15.4531155	90.84	163.09	157.46	72.04	162.88	119	82	82	81		1.001	9.079	826
1223	198.580	198.278		0.16	0.16	1.32	1.06	0.26	93	93	81	2	1.5	85	0.014	102	102	62.2	-0.01	1.05	15.4272242	90.62	162.85	157.25	72.02	162.64	118	82	82	81		1.001	8.756	794
1224	198.741	198.440		0.16	0.16	1.32	1.05	0.26	93	93	81	2	1.5	85	0.012	109	110	62.2	0.04	1.05	15.4397945	90.42	162.61	157.03	72.00	162.42	118	82	82	81		1.001	8.756	793
1225	198.903	198.603		0.16	0.16	1.32	1.06	0.26	93	93	81	2.01	1.5	85	0.015	98	99	62.3	-0.10	1.05	15.3841867	90.20	162.43	156.86	72.02	162.21	118	82	82	81		1.001	8.752	790
1226	199.064	198.765		0.16	0.16	1.32	1.06	0.26	93	93	81	2.02	1.5	85	0.015	98	98	62.1	0.18	1.05	15.4460526	90.00	162.23	156.67	72.00	162.00	117	82	82	81		1.001	8.760	789
1227	199.226	198.928		0.16	0.16	1.32	1.05	0.26	93	93	81	2.03	1.5	91	0.016	96	96	62.3	-0.16	1.13	15.3172474	89.72	162.00	156.43	72.07	161.79	141	83	83	81		1.001	9.388	843

Elapsed Time	Particulate Sampling Data																		Fuel Weight, lb		Flow, gpm		Temperature Data, oF									Stack			
	Gas Meter Cubic Feet (1)	Gas Meter Cubic Feet (2)	Gas Meter Cubic Feet (amb)	Sample Rate, cfm (1)	Sample Rate, cfm (2)	Orifice dH (1)	Orifice dH (2)	Orifice dH (amb)	Meter oF (1)	Meter oF (2)	Meter oF (amb)	Meter Vac. In. Hg. (1)	Meter Vac. In. Hg. (2)	Dilution Tunnel Temp.	Dilution Tunnel dP	Pro. Rate (%) (1)	Pro. Rate (%) (2)	Scale Reading	Weight Change	Load Side Liquid Flow Rate	Boiler Side Liquid Flow Rate (optional)	Thermopile ΔT	Boiler to Heat Exch. Temp.	Heat Exch to Boiler Temp.	Inlet Load Temp.	Outlet Load Temp.	Stack	Filter (1)	Filter (2)	Ambient	Draft In. H2O	Specific Heat of Inlet Water (BTU/lb-°F)	Mass Flow Rate of Inlet Water (lb/min)	Heat Output, Btu
1228	199.387	199.090		0.16	0.16	1.32	1.05	0.26	93	93	81	2.03	1.5	94	0.017	93	93	62.0	0.27	1.07	15.3173399	89.38	161.69	156.05	72.11	161.49	156	83	83	81		1.001	8.915	798
1229	199.548	199.252		0.16	0.16	1.32	1.06	0.26	93	93	81	2.01	1.5	95	0.015	99	99	61.8	0.17	1.06	15.3748913	89.17	161.53	155.98	72.14	161.31	167	83	83	81		1.001	8.807	786
1230	199.710	199.414		0.16	0.16	1.32	1.06	0.26	93	93	81	2.01	1.5	97	0.016	96	96	61.3	0.59	1.03	15.451313	88.97	161.40	155.87	72.20	161.17	180.73161	83	83	81		1.001	8.580	764
1231	199.871	199.577		0.16	0.16	1.32	1.07	0.26	93	93	81	2.02	1.5	100	0.014	103	103	60.8	0.44	1.10	15.4410496	88.89	161.35	155.86	72.22	161.11	195.06003	83	84	81		1.001	9.152	814
1232	200.032	199.739		0.16	0.16	1.33	1.07	0.26	94	93	81	2.02	1.5	103	0.016	96	96	60.1	0.67	1.07	15.4131422	88.95	161.53	156.04	72.30	161.26	212.26523	84	84	81		1.001	8.914	794
1233	200.193	199.901		0.16	0.16	1.32	1.07	0.26	94	93	81	2.03	1.5	106	0.014	103	103	59.6	0.54	1.11	15.4414425	89.19	161.86	156.34	72.33	161.52	224.71497	84	84	81		1.001	9.235	825
1234	200.355	200.063		0.16	0.16	1.33	1.07	0.26	94	93	81	2.02	1.5	108	0.015	100	100	59.1	0.45	1.13	15.510745	89.46	162.13	156.57	72.37	161.83	233.60936	84	85	81		1.001	9.397	842
1235	200.516	200.225		0.16	0.16	1.33	1.07	0.26	94	93	81	2.02	1.5	111	0.014	103	104	58.7	0.49	1.13	15.3933744	89.81	162.54	156.95	72.39	162.20	241.80692	85	85	81		1.001	9.389	844
1236	200.677	200.387		0.16	0.16	1.33	1.06	0.26	94	93	81	2.03	1.5	113	0.016	97	97	57.8	0.81	1.07	15.4535389	90.36	163.11	157.50	72.40	162.76	248.04843	85	86	81		1.001	8.911	806
1237	200.838	200.549		0.16	0.16	1.32	1.07	0.26	94	93	81	2.02	1.5	114	0.016	97	97	57.4	0.44	1.07	15.4696627	91.13	163.90	158.26	72.40	163.53	252.97215	86	86	81		1.001	8.913	813
1238	200.999	200.711		0.16	0.16	1.32	1.07	0.26	94	93	81	2.02	1.5	116	0.016	97	98	56.6	0.81	1.09	15.4607773	91.83	164.61	158.88	72.39	164.22	256.88998	86	86	81		1.001	9.070	834
1239	201.160	200.873		0.16	0.16	1.32	1.07	0.26	94	93	81	2.04	1.5	117	0.016	97	98	55.9	0.71	1.15	15.3397312	92.55	165.30	159.48	72.39	164.94	259.46927	86	86	81		1.001	9.559	886
1240	201.321	201.035		0.16	0.16	1.32	1.07	0.26	94	93	81	2.04	1.5	118	0.016	97	98	55.3	0.54	1.13	15.4337959	93.37	166.13	160.26	72.38	165.76	262.79819	86	87	81		1.001	9.395	878
1241	201.482	201.196		0.16	0.16	1.32	1.06	0.26	94	93	81	2.04	1.5	118	0.015	101	100	54.5	0.79	1.09	15.4485922	94.45	167.31	161.39	72.39	166.84	266.17618	87	87	81		1.001	9.073	858
1242	201.643	201.357		0.16	0.16	1.32	1.06	0.26	94	93	81	2.03	1.5	120	0.016	97	97	54.0	0.52	1.07	15.4512701	95.56	168.37	162.49	72.35	167.91	268.79425	87	87	81		1.001	8.911	853
1243	201.803	201.519		0.16	0.16	1.32	1.06	0.26	94	93	81	2.05	1.5	120	0.016	97	98	53.3	0.77	0.99	15.4514208	96.45	169.22	163.36	72.40	168.85	270.03461	87	88	81		1.001	8.258	797
1244	201.964	201.681		0.16	0.16	1.32	1.06	0.26	94	93	81	2.03	1.5	120	0.016	97	98	52.6	0.62	1.07	15.4132299	97.37	170.24	164.76	72.38	169.75	270.93164	88	88	81		1.001	8.909	868
1245	202.125	201.842		0.16	0.16	1.32	1.06	0.26	94	93	81	2.04	1.5	121	0.014	104	104	51.9	0.71	1.11	15.4990292	98.39	171.18	165.31	72.35	170.75	272.42545	88	88	81		1.001	9.233	910
1246	202.285	202.003		0.16	0.16	1.32	1.06	0.26	94	93	81	2.05	1.5	122	0.018	91	92	51.1	0.79	1.03	15.3858452	99.30	172.14	166.24	72.38	171.69	274.94666	88	89	81		1.001	8.582	853
1247	202.446	202.165		0.16	0.16	1.31	1.05	0.26	94	93	81	2.04	1.5	122	0.014	104	105	50.5	0.66	1.05	15.4229631	100.29	173.16	167.35	72.39	172.69	276.08429	88	89	81		1.001	8.747	878
1248	202.606	202.326		0.16	0.16	1.31	1.05	0.26	94	93	81	2.06	1.5	122	0.016	97	97	49.6	0.84	1.13	15.3934307	101.15	174.05	167.90	72.45	173.60	277.17798	89	89	81		1.001	9.395	951
1249	202.767	202.486		0.16	0.16	1.31	1.05	0.26	94	93	81	2.04	1.5	123	0.015	101	100	48.8	0.85	1.07	15.5171318	102.28	175.23	169.06	72.45	174.74	278.56754	89	89	81		1.001	8.908	912
1250	202.927	202.647		0.16	0.16	1.31	1.05	0.26	94	94	82	2.05	1.5	123	0.015	100	101	48.2	0.55	1.05	15.4753017	103.34	176.27	169.99	72.51	175.84	280.10172	89	90	82		1.001	8.751	905
1251	203.087	202.809		0.16	0.16	1.31	1.05	0.26	94	94	81	2.06	1.5	123	0.017	94	95	47.4	0.82	1.07	15.4229994	104.49	177.51	171.06	72.50	176.99	279.46262	89	90	81		1.001	8.909	932
1252	203.248	202.969		0.16	0.16	1.31	1.05	0.26	94	94	81	2.06	1.5	124	0.017	95	94	46.6	0.85	1.01	15.422472	105.66	178.58	172.04	72.42	178.08	281.72693	89	90	81		1.001	8.437	892
1253	203.408	203.130		0.16	0.16	1.31	1.05	0.26	94	94	81	2.05	1.5	124	0.015	100	101	45.5	1.05	1.06	15.4028664	106.57	179.46	172.95	72.45	179.02	282.24625	90	90	81		1.001	8.833	942
1254	203.568	203.291		0.16	0.16	1.31	1.05	0.26	94	94	81	2.06	1.5	124	0.016	97	97	45.0	0.49	1.07	15.4408693	107.74	180.54	173.85	72.31	180.05	282.98996	90	90	81		1.001	8.902	960
1255	203.728	203.451		0.16	0.16	1.31	1.05	0.26	94	94	81	2.06	1.5	124	0.014	104	104	44.5	0.51	1.06	15.3934326	108.85	181.46	174.80	72.16	181.00	283.21393	90	90	81		1.001	8.826	962
1256	203.889	203.612		0.16	0.16	1.31	1.05	0.26	94	94	82	2.05	1.5	124	0.015	101	101	44.0	0.50	1.09	15.4223595	110.30	182.59	175.92	71.81	182.11	283.09372	90	91	82		1.001	9.100	1005
1257	204.049	203.773		0.16	0.16	1.33	1.05	0.26	94	94	82	2.06	1.5	117	0.014	103	104	43.1	0.96	1.11	15.3620453	111.31	183.56	176.77	71.75	183.06	273.607	90	90	82		1.001	9.246	1030
1258	204.210	203.934		0.16	0.16	1.32	1.04	0.26	94	94	82	2.04	1.5	103	0.015	99	99	42.7	0.31	1.07	15.4181633	112.31	184.36	177.51	71.64	183.94	251.08794	89	90	82		1.001	8.910	1002
1259	204.372	204.095		0.16	0.16	1.32	1.05	0.26	94	94	82	2.04	1.5	99	0.017	93	92	42.5	0.22	1.07	15.4148884	112.77	184.73	177.85	71.54	184.31	237.68816	89	89	82		1.001	8.901	1005
1260	204.533	204.257		0.16	0.16	1.31	1.05	0.26	94	94	82	2.04	1.5	96	0.015	99	99	42.2	0.35	1.11	15.4127588	113.15	185.05	178.25	71.55	184.70	228.76724	89	89	82		1.001	9.231	1046
1261	204.695	204.419		0.16	0.16	1.31	1.05	0.26	94	94	82	2.04	1.5	95	0.016	96	96	41.9	0.26	1.05	15.4029207	113.24	185.05	178.23	71.47	184.70	221.65706	89	89	82		1.001	8.749	992
1262	204.856	204.581		0.16	0.16	1.31	1.04	0.26	94	94	82	2.04	1.5	94	0.014	102	102	41.8	0.18	1.09	15.421278	113.36	185.23	178.39	71.50	184.85	216.08739	88	88	82		1.001	9.072	1030
1263	205.018	204.742		0.16	0.16	1.31	1.05	0.26	94	94	82	2.04	1.5	93	0.014	102	101	41.5	0.30	1.07	15.3843107	113.64	185.30	178.41	71.32	184.96	211.41979	88	88	82		1.001	8.911	1014
1264	205.179	204.904		0.16	0.16	1.32	1.05	0.26	94	94	82	2.04	1.5	92	0.014	102	102	41.3	0.13	1.05	15.4319048	113.81	185.38	178.43	71.24	185.04	207.541	88	88	82		1.001	8.748	997
1265	205.341	205.066		0.16	0.16	1.32	1.05	0.26	94	94	82	2.06	1.5	92	0.014	102	102	41.4	-0.07	1.09	15.4514189	114.00	185.41	178.45	71.06	185.06	204.42574	88	88	82		1.001	9.072	1035
1266	205.502	205.228		0.16	0.16	1.32	1.05	0.26	94	94	82	2.03	1.5	91	0.014	102	102	41.3	0.12	1.03	15.4205675	114.08	185.41	178.41	70.99	185.07	201.9924	88	88	82		1.001	8.590	981
1267	205.664	205.389		0.16	0.16	1.32	1.05	0.26	94	94	82	2.03	1.5	89	0.015	99	98	41.2	0.03	1.05	15.3843222	114.31	185.46	178.47	70.81	185.13	200.51228	87	87	82		1.001	8.750	1001
1268	205.825	205.551		0.16	0.16	1.31	1.05	0.26	94	94	82	2.05	1.5	89	0.014	101	102	41.0	0.20	1.09	15.3458586	114.37	185.45	178.54	70.74	185.12	198.74945	87	87	82		1.001	9.076	1039
1269	205.987	205.714		0.16	0.16	1.31	1.05	0.26	94	94	82	2.03	1.5	89	0.014	102	102	41.0	0.07	1.07	15.320919	114.26	185.35	178.44	70.76	185.03	196.48644	87	87	82		1.001	8.910	1019
1270	206.149	205.875		0.16	0.16	1.32	1.05	0.26	94	94	82	2.04	1.5	89	0.014	102	101	40.9	0.07	0.99	15.463872	114.27	185.30	178.42	70.68	184.96	194.06435	87	87	82		1.001	8.264	945
1271	206.310	206.037		0.16	0.16	1.31	1.05	0.26	94	94	82	2.05	1.5	88	0.014	101	102	40.9	0.04	1.03	15.364543	114.39	185.25	178.39	70.53	184.92	191.56563	87	87	82		1.001	8.589	984
1272	206.472	206.198		0.16	0.16	1.32	1.05	0.26	94	94	82	2.05	1.5	88	0.014	102	101	40.9	-0.04	1.09	15.3472042	114.34	185.17	178.24	70.49	184.84	189.17317	87	87	82		1.001	9.069	1038
1273	206.633	206.361		0.16	0.16	1.31	1.05	0.26	94	94	82	2.04	1.5	88	0.016	95	96	41.0	-0.08	1.03	15.4266729	114.26	185.07	178.10	70.49	184.75	186.70172	87	87	82		1.001	8.589	982
1274	206.795	206.523		0.16	0.16	1.32	1.05	0.26	94	94	82	2.04	1.5	88	0.017	93	92	40.9	0.05	1.00	15.4606695	114.25	184.95	177.96	70.37	184.62	184.46741	86	86	82		1.001	8.289	948
1275	206.957	206.684		0.16	0.16	1.31	1.05	0.26	95	94	82	2.03	1.5	88	0.014	102	101	40.8	0.08	0.94	15.4895258	114.26	184.84	178.26	70.26	184.52	182.23946	86	86	82		1.001	7.781	890
1276	207.118	206.846		0.16	0.16	1.32	1.05	0.26	95	94	82	2.03	1.5	88	0.016	95	95	40.9	-0.02	1.07	15.4029207	114.22	184.74	177.83	70.22	184.43	180.12402	86	86	82		1.001	8.921	1020
1277	207.280	207.009		0.16	0.16	1.32	1.05	0.26	95	94	82	2.03	1.5	88	0.015	98	99	40.7	0.12	1.10	15.4993849	114.25	184.64	177.65	70.08	184.33	178.0945	86	86	82		1.001	9.111	1042
1278	207.442	207.171		0.16	0.16	1.32	1.05	0.26	95	94	82	2.03	1.5	88	0.013	106	105	40.8	-0.09	1.09	15.4404888	114.19	184.50	177.75	70.02	184.21	176.13556	86	86	82		1.001	9.078	1038
1279	207.603	207.332		0.16	0.16	1.32	1.04	0.26	95	94	82	2.04	1.5	88	0.014	101	101	40.7	0.12	1.07	15.3934641	114.07	184.37	177.45	69.99	184.06	174.23889	86	86	82		1.001	8.905	1017
1280	207.765	207.494		0.16	0.16	1.32	1.05	0.26	95	94	82	2.04	1.5	88	0.015	98	98	40.7	0.03	1.12	15.4413929	113.98	184.24	177.35	69.94	183.93	172.44318	86	86	82		1.001	9.351	1067
1281	207.927	207.657		0.16	0.16	1.32	1.05	0.26	95	94	82	2.03	1.5	88	0.015	98	99	40.8	-0.13	1.06	15.3892479	113.88	184.11	177.12	69.93	183.82	170.62531	86	86	82		1.001	8.798	1003
1282	208.088	207.819		0.16	0.16	1.32	1.05	0.26	95	94	82	2.05	1.5	88	0.015	98	98	40.8	-0.02	1.09	15.5081015	113.89	183.99	177.04	69.80	183.69	168.83479	86	86	82		1.001	9.072	1034
1283	208.250	207.980		0.16	0.16	1.31	1.05	0.26	95	94	82	2.04	1.5	87	0.015	98	97	40.8	0.01	1.09	15.392333	113.65	183.82	176.91	69.87	183.52	167.23216	86	85	82		1.001	9.070	1032
1284	208.412	208.142		0.16	0.16	1.32	1.05	0.26	95	94	82	2.05	1.5	87	0.014	102	101	40.8	0.04	1.09	15.4895706	113.58	183.66	176.77	69.78	183.36	165.60701	85	85	82		1.001	9.070	1031
1285	208.573	208.305		0.16	0.16	1.31	1.05	0.26	95	94	82	2.05	1.5	87	0.014	101	102	40.8	-0.02	1.03	15.4280968	113.48	183.50	176.63	69.74	183.22	164.13606	85	85	82		1.001	8.587	976
1286	208.735	208.466		0.16	0.16	1.31	1.04	0.26	95	94	82	2.05	1.5	87	0.016	95	94	40.8	-0.03	1.07	15.3941813	113.36	183.38	176.51	69.72	183.08	162.68744	85	85	82		1.001	8.912	1011
1287	208.897	208.628		0.16	0.16	1.31	1.05	0.26	95	94	82	2.03	1.5	87	0.016	95	95	40.8	0.01	1.09	15.393507	113.21	183.21	176.37	69.71	182.92	161.2776	85	85	82		1.001	9.075	1029
1288	209.058	208.790		0.16	0.16	1.31	1.05	0.26	95	94	82	2.05	1.5	87	0.014	101	101	40.9	-0.10	1.09	15.4226046	113.04	183.01	176.24	69.67	182.71	159.90936	85	85	82		1.001	9.073	1027
1289	209.220	208.952		0.16	0.16	1.32	1.05	0.26	95	94	83	2.04	1.5	87	0.014	102	101	40.7	0.19	1.07	15.4226389	112.91	182.84	176.08	69.65	182.56	158.51039	85	85	83		1.001	8.910	1007

Elapsed Time	Particulate Sampling Data																	Fuel Weight, lb		Flow, gpm		Temperature Data, oF									Stack			
	Gas Meter Cubic Feet (1)	Gas Meter Cubic Feet (2)	Gas Meter Cubic Feet (amb)	Sample Rate, cfm (1)	Sample Rate, cfm (2)	Orifice dH (1)	Orifice dH (2)	Orifice dH (amb)	Meter oF (1)	Meter oF (2)	Meter oF (amb)	Meter Vac. In. Hg. (1)	Meter Vac. In. Hg. (2)	Dilution Tunnel Temp.	Dilution Tunnel dP	Pro. Rate (%) (1)	Pro. Rate (%) (2)	Scale Reading	Weight Change	Load Side Liquid Flow Rate	Boiler Side Liquid Flow Rate (optional)	Thermopile ΔT	Boiler to Heat Exch. Temp.	Heat Exch to Boiler Temp.	Inlet Load Temp.	Outlet Load Temp.	Stack	Filter (1)	Filter (2)	Ambient	Draft In. H2O	Specific Heat of Inlet Water (BTU/lb-°F)	Mass Flow Rate of Inlet Water (lb/min)	Heat Output, Btu
1290	209.381	209.114		0.16	0.16	1.32	1.05	0.26	95	94	82	2.04	1.5	87	0.014	101	101	40.7	0.05	1.09	15.4505844	112.80	182.68	175.92	69.62	182.42	157.13051	85	85	82		1.001	9.074	1025
1291	209.543	209.276		0.16	0.16	1.32	1.05	0.26	95	94	82	2.04	1.5	87	0.014	102	101	40.7	0.02	1.05	15.4852009	112.70	182.51	175.74	69.54	182.23	155.82149	85	85	82		1.001	8.750	987
1292	209.705	209.438		0.16	0.16	1.32	1.05	0.26	95	94	82	2.04	1.5	87	0.014	102	101	40.8	-0.15	1.05	15.3843327	112.44	182.30	175.58	69.56	182.01	154.5267	85	85	82		1.001	8.751	985
1293	209.866	209.600		0.16	0.16	1.32	1.05	0.26	95	94	82	2.05	1.5	87	0.016	95	95	40.8	0.03	1.09	15.374898	112.28	182.12	175.44	69.58	181.86	153.40468	85	85	82		1.001	9.073	1020
1294	210.028	209.762		0.16	0.16	1.32	1.05	0.26	95	94	83	2.04	1.5	87	0.016	95	95	40.9	-0.15	1.09	15.3843422	112.02	181.92	175.20	69.62	181.64	152.25623	85	85	83		1.001	9.071	1017
1295	210.189	209.923		0.16	0.16	1.32	1.05	0.26	95	94	83	2.05	1.5	87	0.014	101	101	40.7	0.20	1.05	15.4132214	111.87	181.74	175.03	69.56	181.44	151.18662	85	85	83		1.001	8.750	980
1296	210.351	210.085		0.16	0.16	1.32	1.05	0.26	95	94	83	2.05	1.5	87	0.013	105	105	40.9	-0.12	1.07	15.4409399	111.58	181.51	174.82	69.65	181.23	150.24608	85	85	83		1.001	8.911	995
1297	210.513	210.248		0.16	0.16	1.31	1.05	0.26	95	94	83	2.05	1.5	87	0.015	98	99	40.9	-0.05	1.07	15.4511328	111.43	181.29	174.63	69.57	181.00	149.32376	85	85	83		1.001	8.913	994
1298	210.674	210.410		0.16	0.16	1.31	1.05	0.26	95	95	83	2.03	1.5	87	0.014	101	101	40.9	0.01	1.09	15.4700909	111.27	181.12	174.42	69.55	180.82	148.35443	85	85	83		1.001	9.076	1011
1299	210.836	210.571		0.16	0.16	1.31	1.05	0.26	95	95	83	2.03	1.5	87	0.016	95	94	40.8	0.05	1.07	15.4223032	111.03	180.90	174.21	69.59	180.62	147.33102	85	85	83		1.001	8.905	990
1300	210.997	210.733		0.16	0.16	1.31	1.05	0.26	95	95	83	2.05	1.5	87	0.014	101	101	40.9	-0.07	1.11	15.3696375	110.82	180.69	174.04	69.59	180.41	146.61508	85	85	83		1.001	9.228	1024
1301	211.159	210.896		0.16	0.16	1.31	1.05	0.26	95	95	83	2.05	1.5	87	0.014	102	102	40.8	0.13	1.05	15.4702044	110.62	180.51	173.92	69.60	180.22	146.01103	85	85	83		1.001	8.753	969
1302	211.321	211.058		0.16	0.16	1.32	1.05	0.26	95	95	83	2.04	1.5	87	0.014	102	101	41.0	-0.17	1.09	15.4700823	110.45	180.28	173.69	69.56	180.01	145.36086	85	85	83		1.001	9.072	1003
1303	211.482	211.219		0.16	0.16	1.32	1.05	0.26	95	95	83	2.05	1.5	87	0.012	109	109	40.9	0.12	1.13	15.4410706	110.32	180.05	173.47	69.48	179.80	144.519	85	85	83		1.001	9.394	1038
1304	211.644	211.381		0.16	0.16	1.31	1.05	0.26	95	95	83	2.04	1.5	87	0.017	92	92	41.0	-0.16	1.03	15.4521713	110.01	179.88	173.24	69.59	179.60	143.54581	85	85	83		1.001	8.587	946
1305	211.805	211.543		0.16	0.16	1.32	1.05	0.26	95	95	83	2.04	1.5	87	0.016	95	95	40.9	0.07	0.99	15.4179916	109.88	179.64	172.99	69.49	179.37	142.88318	85	85	83		1.001	8.238	906
1306	211.967	211.705		0.16	0.16	1.31	1.05	0.26	95	95	83	2.05	1.5	87	0.013	105	105	40.9	0.06	1.08	15.4514389	109.58	179.43	172.95	69.59	179.17	142.07614	85	85	83		1.001	8.962	983
1307	212.129	211.867		0.16	0.16	1.31	1.05	0.26	95	95	83	2.04	1.5	87	0.015	98	98	41.0	-0.11	1.04	15.4796257	109.37	179.18	172.61	69.54	178.91	141.48596	85	85	83		1.001	8.689	951
1308	212.290	212.029		0.16	0.16	1.31	1.05	0.26	95	95	83	2.03	1.5	87	0.014	101	101	40.9	0.07	1.05	15.4413862	109.17	179.01	172.43	69.54	178.71	140.82913	85	85	83		1.001	8.751	957
1309	212.452	212.191		0.16	0.16	1.31	1.05	0.26	95	95	83	2.03	1.5	87	0.016	95	95	41.1	-0.16	1.09	15.422183	109.02	178.76	172.13	69.47	178.49	140.17064	85	85	83		1.001	9.067	990
1310	212.613	212.353		0.16	0.16	1.32	1.05	0.26	95	95	83	2.04	1.5	87	0.013	105	105	40.8	0.27	1.07	15.4224062	108.82	178.53	171.91	69.45	178.26	139.68639	85	85	83		1.001	8.910	971
1311	212.775	212.515		0.16	0.16	1.31	1.05	0.26	95	95	83	2.05	1.5	87	0.016	95	95	41.0	-0.17	1.05	15.4030762	108.59	178.36	171.82	69.50	178.10	138.85005	85	85	83		1.001	8.744	951
1312	212.937	212.677		0.16	0.16	1.31	1.05	0.26	95	95	83	2.04	1.5	87	0.015	98	98	41.0	0.00	1.07	15.4320765	108.34	178.09	171.50	69.49	177.84	138.0183	85	85	83		1.001	8.912	967
1313	213.098	212.839		0.16	0.16	1.32	1.05	0.26	95	95	83	2.03	1.5	87	0.015	98	98	41.0	-0.01	1.03	15.4232292	108.09	177.88	171.29	69.51	177.60	137.67082	85	85	83		1.001	8.591	930
1314	213.260	213.001		0.16	0.16	1.32	1.05	0.26	95	95	83	2.04	1.5	87	0.015	98	98	41.1	-0.11	1.07	15.4993916	107.89	177.64	171.12	69.48	177.38	137.02269	85	85	83		1.001	8.912	963
1315	213.422	213.163		0.16	0.16	1.32	1.04	0.26	95	95	83	2.05	1.5	87	0.015	98	98	41.0	0.15	1.09	15.4136019	107.66	177.39	170.90	69.47	177.13	136.19743	85	85	83		1.001	9.076	978
1316	213.583	213.325		0.16	0.16	1.31	1.05	0.26	95	95	83	2.04	1.5	87	0.014	101	101	40.9	0.04	1.03	15.5192184	107.48	177.17	170.68	69.42	176.90	135.77727	85	85	83		1.001	8.588	924
1317	213.745	213.487		0.16	0.16	1.32	1.05	0.26	95	95	83	2.03	1.5	87	0.015	98	98	41.1	-0.20	1.11	15.4433889	107.31	176.94	170.53	69.39	176.70	134.98399	85	85	83		1.001	9.238	993
1318	213.906	213.649		0.16	0.16	1.31	1.05	0.26	95	95	83	2.05	1.5	87	0.015	98	98	41.2	-0.04	1.07	15.3488712	107.01	176.67	170.21	69.42	176.43	134.24564	85	84	83		1.001	8.905	954
1319	214.068	213.811		0.16	0.16	1.32	1.05	0.26	95	95	83	2.03	1.5	87	0.014	102	101	41.1	0.07	1.05	15.4451065	106.82	176.47	170.00	69.40	176.22	133.8159	85	85	83		1.001	8.747	935
1320	214.230	213.973		0.16	0.16	1.32	1.05	0.26	95	95	83	2.04	1.5	87	0.015	98	98	41.0	0.04	1.01	15.3752451	106.50	176.21	169.81	69.43	175.93	133.06154	85	85	83		1.001	8.422	898
1321	214.391	214.135		0.16	0.16	1.31	1.05	0.26	95	95	83	2.05	1.5	87	0.016	95	95	41.2	-0.17	1.05	15.4516773	106.26	175.97	169.63	69.44	175.70	132.50459	85	85	83		1.001	8.746	931
1322	214.553	214.298		0.16	0.16	1.32	1.05	0.26	95	95	83	2.04	1.5	87	0.013	105	106	41.2	0.06	1.09	15.3935909	105.93	175.69	169.30	69.51	175.44	132.25119	85	85	83		1.001	9.072	962
1323	214.715	214.459		0.16	0.16	1.31	1.04	0.26	95	95	83	2.04	1.5	87	0.015	98	97	41.0	0.14	1.07	15.3844213	105.84	175.53	169.21	69.44	175.28	131.68343	85	85	83		1.001	8.908	944
1324	214.876	214.621		0.16	0.16	1.31	1.05	0.26	95	95	83	2.03	1.5	87	0.015	98	98	41.1	-0.08	1.05	15.4893322	105.58	175.33	168.91	69.45	175.03	131.32301	85	85	83		1.001	8.748	925
1325	215.038	214.783		0.16	0.16	1.32	1.05	0.26	95	95	83	2.04	1.5	87	0.015	98	98	41.2	-0.06	1.09	15.4613209	105.33	175.02	168.70	69.44	174.77	130.98157	85	85	83		1.001	9.068	956
1326	215.200	214.946		0.16	0.16	1.32	1.05	0.26	95	95	83	2.05	1.5	87	0.015	98	98	41.2	-0.01	1.13	15.393548	105.19	174.84	168.52	69.42	174.61	131.36072	85	85	83		1.001	9.394	989
1327	215.361	215.107		0.16	0.16	1.31	1.04	0.26	95	95	83	2.05	1.5	94	0.015	98	98	40.9	0.27	1.09	15.4514027	104.86	174.60	168.27	69.48	174.34	156.75388	85	85	83		1.001	9.075	953
1328	215.523	215.269		0.16	0.16	1.32	1.05	0.26	95	95	83	2.03	1.5	88	0.014	102	101	40.9	-0.03	1.09	15.4610748	104.70	174.37	167.79	69.40	174.11	149.29825	85	85	83		1.001	9.068	951
1329	215.685	215.431		0.16	0.16	1.32	1.05	0.26	95	95	83	2.03	1.5	87	0.014	102	101	40.8	0.10	1.07	15.4517002	104.42	174.06	167.53	69.38	173.80	144.33369	85	85	83		1.001	8.904	931
1330	215.846	215.594		0.16	0.16	1.31	1.05	0.26	95	95	83	2.04	1.5	87	0.014	101	102	40.7	0.12	1.11	15.451313	104.18	173.88	167.32	69.43	173.61	141.06348	85	85	83		1.001	9.243	964
1331	216.008	215.756		0.16	0.16	1.32	1.05	0.26	95	95	83	2.02	1.5	87	0.015	98	98	41.0	-0.29	1.05	15.4701548	104.00	173.68	167.15	69.43	173.42	138.55591	85	85	83		1.001	8.749	911
1332	216.170	215.918		0.16	0.16	1.32	1.05	0.26	95	95	83	2.03	1.5	87	0.016	95	95	40.8	0.23	1.13	15.4410429	103.76	173.45	166.97	69.42	173.18	136.75626	85	85	83		1.001	9.404	977
1333	216.332	216.080		0.16	0.16	1.31	1.05	0.26	95	95	83	2.04	1.5	87	0.014	102	101	40.8	-0.03	1.17	15.4169035	103.52	173.21	166.77	69.44	172.96	135.20445	85	85	83		1.001	9.721	1008
1334	216.494	216.243		0.16	0.16	1.32	1.05	0.26	96	95	83	2.03	1.5	87	0.013	105	106	40.8	0.00	1.06	15.4155579	103.29	172.99	166.54	69.45	172.74	133.9566	85	85	83		1.001	8.792	909
1335	216.656	216.405		0.16	0.16	1.31	1.05	0.26	96	95	83	2.04	1.5	87	0.014	101	101	40.8	-0.03	1.08	15.4414244	103.11	172.70	166.30	69.33	172.44	132.77249	85	85	83		1.001	8.954	924
1336	216.818	216.567		0.16	0.16	1.32	1.05	0.26	96	95	83	2.02	1.5	87	0.015	98	98	40.7	0.10	1.09	15.452261	102.88	172.52	166.16	69.39	172.27	131.41789	85	85	83		1.001	9.091	936
1337	216.980	216.729		0.16	0.16	1.32	1.06	0.26	96	95	83	2.04	1.5	87	0.014	101	101	40.7	0.03	1.12	15.3936377	102.55	172.23	165.84	69.44	171.99	130.64249	85	85	83		1.001	9.338	959
1338	217.142	216.892		0.16	0.16	1.32	1.05	0.26	96	95	83	2.03	1.5	87	0.016	95	95	40.6	0.09	1.07	15.3935452	102.42	171.98	165.50	69.32	171.74	130.04732	85	85	83		1.001	8.911	914
1339	217.304	217.055		0.16	0.16	1.31	1.05	0.26	96	95	83	2.04	1.5	87	0.014	101	102	40.7	-0.08	1.19	15.4133024	102.09	171.78	165.25	69.41	171.50	129.40141	85	85	83		1.001	9.876	1009
1340	217.466	217.217		0.16	0.16	1.31	1.05	0.26	96	95	83	2.02	1.5	87	0.014	101	101	40.9	-0.20	1.13	15.5081987	101.68	171.50	165.06	69.58	171.26	128.85341	85	85	83		1.001	9.393	956
1341	217.627	217.379		0.16	0.16	1.31	1.05	0.26	96	95	83	2.04	1.5	87	0.013	105	105	41.0	-0.15	1.15	15.404644	101.35	171.25	164.88	69.63	170.98	128.03427	85	85	83		1.001	9.558	970
1342	217.789	217.541		0.16	0.16	1.31	1.06	0.26	96	95	83	2.02	1.5	87	0.014	101	101	40.7	0.37	1.07	15.4127836	101.03	171.01	164.67	69.72	170.75	127.52869	85	85	83		1.001	8.906	901
1343	217.951	217.704		0.16	0.16	1.31	1.05	0.26	96	95	83	2.04	1.5	87	0.014	101	102	40.8	-0.17	1.09	15.5253887	100.66	170.69	164.42	69.82	170.48	126.84875	85	85	83		1.001	9.069	914
1344	218.113	217.866		0.16	0.16	1.31	1.05	0.26	96	95	83	2.03	1.5	87	0.014	101	101	40.9	-0.06	1.07	15.4610319	100.34	170.55	164.25	69.93	170.26	125.99556	85	85	83		1.001	8.910	895
1345	218.275	218.028		0.16	0.16	1.31	1.05	0.26	96	95	83	2.04	1.5	87	0.016	95	95	40.9	0.03	1.13	15.4320631	99.95	170.24	163.98	70.03	169.98	125.55592	85	85	83		1.001	9.390	940
1346	218.437	218.190		0.16	0.16	1.31	1.05	0.26	96	95	83	2.04	1.5	87	0.014	101	101	40.8	0.03	1.11	15.4701881	99.60	170.01	163.80	70.15	169.75	125.06683	85	85	83		1.001	9.228	920
1347	218.599	218.353		0.16	0.16	1.31	1.05	0.26	96	95	83	2.02	1.5	87	0.014	101	102	40.6	0.20	1.11	15.3756208	99.30	169.81	163.61	70.24	169.54	124.18759	85	85	83		1.001	9.234	918
1348	218.761	218.516		0.16	0.16	1.31	1.05	0.26	96	95	83	2.03	1.5	87	0.014	101	102	40.8	-0.16	1.13	15.4591684	98.87	169.45	163.33	70.34	169.22	124.37994	85	85	83		1.001	9.392	930
1349	218.923	218.677		0.16	0.16	1.31	1.05	0.26	96	95	83	2.04	1.5	87	0.014	101	101	40.8	-0.04	1.11	15.4224768	98.60	169.28	163.13	70.44	169.04	124.3639	85	85	83		1.001	9.232	911
1350	219.085	218.839		0.16	0.16	1.31	1.05	0.26	96	95	83	2.02	1.5	87	0.015	98	98	40.8	-0.01	1.15	15.4130974	98.32	169.03	162.83	70.45	168.77	124.10945	85	85	83		1.001	9.554	940
1351	219.246	219.002		0.16	0.16	1.31	1.05	0.26	96	95	83	2.03	1.5	87	0.015	97	98	40.9	-0.04	1.07	15.5065289	97.95	168.76	162.84	70.59	168.53	123.63942	85	85	83		1.001	8.905	873

Elapsed Time	Particulate Sampling Data																	Fuel Weight, lb		Flow, gpm		Temperature Data, oF									Stack			
	Gas Meter Cubic Feet (1)	Gas Meter Cubic Feet (2)	Gas Meter Cubic Feet (amb)	Sample Rate, cfm (1)	Sample Rate, cfm (2)	Orifice dH (1)	Orifice dH (2)	Orifice dH (amb)	Meter oF (1)	Meter oF (2)	Meter oF (amb)	Meter Vac. In. Hg. (1)	Meter Vac. In. Hg. (2)	Dilution Tunnel Temp.	Dilution Tunnel dP	Pro. Rate (%) (1)	Pro. Rate (%) (2)	Scale Reading	Weight Change	Load Side Liquid Flow Rate	Boiler Side Liquid Flow Rate (optional)	Thermopile ΔT	Boiler to Heat Exch. Temp.	Heat Exch to Boiler Temp.	Inlet Load Temp.	Outlet Load Temp.	Stack	Filter (1)	Filter (2)	Ambient	Draft In. H2O	Specific Heat of Inlet Water (BTU/lb-°F)	Mass Flow Rate of Inlet Water (lb/min)	Heat Output, Btu
1352	219.408	219.164		0.16	0.16	1.31	1.05	0.26	96	95	83	2.03	1.5	87	0.014	101	101	40.9	-0.01	1.03	15.4133177	97.59	168.55	162.69	70.73	168.31	123.8261	85	85	83		1.001	8.582	838
1353	219.570	219.326		0.16	0.16	1.31	1.05	0.26	96	95	83	2.03	1.5	87	0.015	98	98	41.0	-0.10	1.05	15.4320068	97.33	168.31	162.55	70.76	168.09	123.39668	85	85	83		1.001	8.744	852
1354	219.732	219.488		0.16	0.16	1.31	1.05	0.26	96	95	83	2.02	1.5	87	0.016	95	95	40.8	0.18	1.01	15.4133043	96.99	168.07	162.31	70.84	167.83	123.44611	85	85	83		1.001	8.417	817
1355	219.894	219.651		0.16	0.16	1.31	1.05	0.26	96	95	83	2.04	1.5	87	0.016	95	95	40.9	-0.12	1.09	15.3848352	96.69	167.80	162.04	70.87	167.56	122.95795	85	85	83		1.001	9.066	878
1356	220.056	219.814		0.16	0.16	1.31	1.05	0.26	96	96	83	2.03	1.5	87	0.014	101	102	41.0	-0.01	1.13	15.4610634	96.52	167.59	161.81	70.84	167.35	122.79783	85	85	83		1.001	9.389	907
1357	220.218	219.976		0.16	0.16	1.31	1.05	0.26	96	96	83	2.04	1.5	87	0.013	105	105	40.7	0.27	1.03	15.5465899	96.21	167.43	161.45	70.97	167.18	129.31354	85	85	83		1.001	8.583	827
1358	220.380	220.137		0.16	0.16	1.31	1.05	0.26	96	96	83	2.04	1.5	92	0.015	98	98	40.9	-0.19	1.05	15.4609804	95.96	167.14	161.10	70.92	166.88	145.43054	85	85	83		1.001	8.741	840
1359	220.541	220.300		0.16	0.16	1.31	1.05	0.26	96	96	83	2.04	1.5	88	0.016	94	95	40.8	0.12	1.09	15.3843899	95.72	166.91	160.99	70.97	166.69	138.8206	85	85	83		1.001	9.061	868
1360	220.703	220.463		0.16	0.16	1.31	1.05	0.26	96	96	83	2.03	1.5	87	0.014	101	102	40.7	0.07	1.15	15.4640856	95.47	166.63	160.69	70.93	166.41	134.51498	85	85	83		1.001	9.530	911
1361	220.865	220.625		0.16	0.16	1.32	1.05	0.26	96	96	83	2.04	1.5	87	0.015	98	98	40.7	0.00	1.07	15.4517632	95.18	166.43	160.50	70.98	166.17	131.63448	85	85	83		1.001	8.908	849
1362	221.027	220.787		0.16	0.16	1.32	1.05	0.26	96	96	83	2.04	1.5	87	0.015	98	98	40.9	-0.18	1.14	15.3943253	95.09	166.21	160.28	70.87	165.96	129.54288	85	85	83		1.001	9.494	904
1363	221.189	220.949		0.16	0.16	1.32	1.05	0.26	96	96	83	2.04	1.5	87	0.015	98	98	40.6	0.26	1.10	15.5082436	95.12	165.98	160.07	70.62	165.74	127.35732	85	85	83		1.001	9.146	871
1364	221.351	221.112		0.16	0.16	1.31	1.06	0.26	96	96	83	2.02	1.5	87	0.014	101	102	40.7	-0.08	1.08	15.3935928	95.00	165.82	159.92	70.59	165.58	125.95345	85	85	83		1.001	8.989	855
1365	221.513	221.275		0.16	0.16	1.32	1.05	0.26	96	96	83	2.03	1.5	87	0.013	105	106	40.8	-0.13	1.05	15.4132824	94.82	165.52	159.59	70.47	165.29	125.11211	85	85	83		1.001	8.747	830
1366	221.675	221.437		0.16	0.16	1.32	1.05	0.26	96	96	83	2.04	1.5	87	0.014	101	101	40.9	-0.08	1.13	15.4410658	94.69	165.33	159.40	70.40	165.09	124.65225	85	85	83		1.001	9.389	890
1367	221.837	221.599		0.16	0.16	1.31	1.06	0.26	96	96	83	2.02	1.5	87	0.015	98	98	40.7	0.15	1.13	15.4133291	94.49	165.13	159.20	70.41	164.90	123.8119	85	85	83		1.001	9.396	889
1368	221.999	221.761		0.16	0.16	1.31	1.05	0.26	96	96	83	2.03	1.5	87	0.015	98	98	40.7	0.03	1.15	15.4132118	94.17	164.82	158.94	70.46	164.63	123.6373	85	85	83		1.001	9.553	901
1369	222.161	221.925		0.16	0.16	1.31	1.05	0.26	96	96	83	2.03	1.5	87	0.014	101	102	40.7	-0.01	1.19	15.5085726	93.85	164.69	158.82	70.63	164.48	123.06148	85	85	83		1.001	9.878	928
1370	222.323	222.087		0.16	0.16	1.32	1.05	0.26	96	96	83	2.02	1.5	87	0.016	95	95	40.8	-0.04	1.07	15.4415026	93.51	164.46	158.58	70.72	164.23	122.44838	85	85	83		1.001	8.909	834
1371	222.485	222.249		0.16	0.16	1.31	1.05	0.26	96	96	83	2.04	1.5	87	0.015	98	98	40.7	0.08	1.13	15.3805561	93.12	164.12	158.28	70.78	163.90	121.96172	85	85	83		1.001	9.394	876
1372	222.647	222.411		0.16	0.16	1.31	1.06	0.26	96	96	83	2.04	1.5	87	0.014	101	101	40.8	-0.08	1.05	15.4980917	92.74	163.85	158.08	70.91	163.65	121.6228	85	85	83		1.001	8.742	812
1373	222.809	222.574		0.16	0.16	1.31	1.06	0.26	96	96	84	2.02	1.5	87	0.014	101	102	40.7	0.02	1.17	15.3556614	92.40	163.72	158.01	71.09	163.49	121.13017	85	85	84		1.001	9.707	898
1374	222.970	222.736		0.16	0.16	1.32	1.06	0.26	96	96	84	2.03	1.5	87	0.016	94	95	40.8	-0.09	1.13	15.3936424	92.01	163.46	157.86	71.18	163.20	120.65216	85	85	84		1.001	9.387	865
1375	223.132	222.898		0.16	0.16	1.32	1.05	0.26	96	96	84	2.04	1.5	87	0.013	105	105	40.7	0.08	1.13	15.4145689	91.67	163.15	157.51	71.27	162.95	120.11861	85	85	84		1.001	9.387	862
1376	223.294	223.060		0.16	0.16	1.32	1.05	0.26	96	96	83	2.03	1.5	87	0.015	98	98	40.8	-0.02	1.05	15.3652029	91.40	163.01	157.34	71.37	162.77	119.75709	85	85	83		1.001	8.737	799
1377	223.456	223.223		0.16	0.16	1.32	1.06	0.26	96	96	84	2.02	1.5	87	0.014	101	102	40.8	-0.07	1.09	15.5466013	91.02	162.71	157.13	71.46	162.48	119.22616	85	85	84		1.001	9.073	827
1378	223.618	223.386		0.16	0.16	1.31	1.06	0.26	96	96	83	2.04	1.5	87	0.014	101	102	40.8	0.02	1.09	15.4259653	90.73	162.52	156.89	71.58	162.30	119.44302	85	85	83		1.001	9.047	822
1379	223.780	223.548		0.16	0.16	1.32	1.05	0.26	96	96	83	2.03	1.5	87	0.014	101	101	40.8	0.06	1.07	15.3942127	90.44	162.31	156.70	71.66	162.11	123.81115	85	85	83		1.001	8.915	807
1380	223.941	223.709		0.16	0.16	1.32	1.05	0.26	96	96	83	2.03	1.5	94	0.016	95	95	40.6	0.12	1.05	15.4240904	90.15	162.06	156.41	71.70	161.85	148.51318	85	85	83		1.001	8.738	789
1381	224.103	223.871		0.16	0.16	1.32	1.05	0.26	96	96	83	2.03	1.5	96	0.014	102	102	40.3	0.30	1.09	15.4545259	89.91	161.91	156.37	71.78	161.69	161.42163	85	85	83		1.001	9.061	816
1382	224.265	224.034		0.16	0.16	1.32	1.05	0.26	96	96	83	2.03	1.5	98	0.013	106	107	40.0	0.28	1.09	15.4133816	89.59	161.62	155.98	71.82	161.42	173.1062	85	86	83		1.001	9.059	813
1383	224.426	224.196		0.16	0.16	1.32	1.06	0.26	96	96	83	2.04	1.5	100	0.015	99	99	39.6	0.42	1.04	15.4227991	89.40	161.52	155.90	71.88	161.27	187.17885	86	86	83		1.001	8.671	776
1384	224.588	224.358		0.16	0.16	1.33	1.06	0.26	96	96	83	2.04	1.5	103	0.015	99	99	39.0	0.63	1.07	15.4513483	89.47	161.61	155.92	71.87	161.34	202.68013	86	86	83		1.001	8.901	797
1385	224.750	224.520		0.16	0.16	1.33	1.06	0.26	96	96	83	2.03	1.5	106	0.013	107	107	38.6	0.45	1.06	15.3752289	89.74	161.92	156.26	71.87	161.61	218.04819	86	86	83		1.001	8.791	790
1386	224.911	224.683		0.16	0.16	1.32	1.06	0.26	96	96	83	2.04	1.5	109	0.015	99	100	38.1	0.48	0.99	15.4340887	90.15	162.31	157.04	71.83	161.98	229.86079	86	87	83		1.001	8.250	745
1387	225.073	224.845		0.16	0.16	1.32	1.06	0.26	96	96	83	2.03	1.5	111	0.015	100	100	37.5	0.58	1.07	15.4487724	90.47	162.70	157.14	71.92	162.38	237.56787	87	87	83		1.001	8.909	807
1388	225.235	225.006		0.16	0.16	1.32	1.06	0.26	96	96	83	2.05	1.5	113	0.015	100	99	37.0	0.49	1.09	15.4893522	91.00	163.25	157.85	71.87	162.86	243.57724	87	87	83		1.001	9.064	826
1389	225.396	225.168		0.16	0.16	1.32	1.06	0.26	96	96	83	2.05	1.5	115	0.014	103	104	36.3	0.70	1.05	15.4609308	91.56	163.77	157.99	71.87	163.43	248.84752	87	88	83		1.001	8.741	801
1390	225.558	225.330		0.16	0.16	1.32	1.06	0.26	96	96	84	2.06	1.5	117	0.016	97	97	35.9	0.45	1.07	15.4042368	92.32	164.59	158.76	71.89	164.21	252.85561	88	88	84		1.001	8.902	823
1391	225.719	225.492		0.16	0.16	1.32	1.06	0.26	96	96	83	2.05	1.5	117	0.015	100	100	35.3	0.56	1.07	15.4405451	93.14	165.35	159.47	71.80	164.95	256.44458	88	88	83		1.001	8.898	830
1392	225.881	225.653		0.16	0.16	1.32	1.06	0.26	96	96	83	2.06	1.5	118	0.016	98	97	34.5	0.80	1.07	15.3754539	93.91	166.23	160.28	71.89	165.80	259.16397	88	89	83		1.001	8.898	837
1393	226.042	225.814		0.16	0.16	1.32	1.05	0.26	96	96	84	2.06	1.5	119	0.015	100	100	33.9	0.59	0.99	15.4319344	94.86	167.21	161.22	71.89	166.75	261.93051	89	89	84		1.001	8.250	784
1394	226.203	225.976		0.16	0.16	1.32	1.06	0.26	96	96	84	2.07	1.5	120	0.016	97	97	33.1	0.78	1.11	15.4473305	95.49	167.86	161.83	71.96	167.45	264.10056	89	89	84		1.001	9.220	881
1395	226.364	226.137		0.16	0.16	1.32	1.05	0.26	96	96	84	2.06	1.5	121	0.014	104	104	32.4	0.75	1.11	15.405138	96.41	168.82	162.61	71.95	168.36	266.26981	89	90	84		1.001	9.218	890
1396	226.526	226.298		0.16	0.16	1.31	1.05	0.26	96	96	84	2.06	1.5	121	0.017	95	94	31.8	0.59	1.09	15.4115086	97.73	170.02	164.25	71.87	169.60	268.38495	89	90	84		1.001	9.058	886
1397	226.687	226.459		0.16	0.16	1.32	1.05	0.26	96	96	83	2.05	1.5	122	0.015	100	100	31.3	0.48	1.09	15.4031277	98.94	171.15	165.14	71.75	170.68	270.22241	90	90	83		1.001	9.057	897
1398	226.848	226.620		0.16	0.16	1.31	1.05	0.26	96	96	84	2.08	1.5	122	0.015	100	100	30.4	0.87	1.03	15.4897537	100.16	172.24	165.87	71.62	171.77	271.43845	90	90	84		1.001	8.577	860
1399	227.009	226.781		0.16	0.16	1.31	1.05	0.26	96	96	84	2.08	1.5	123	0.016	97	97	29.9	0.50	1.09	15.4795198	101.21	173.24	166.82	71.59	172.80	273.12418	90	90	84		1.001	9.059	918
1400	227.170	226.941		0.16	0.16	1.31	1.05	0.26	97	96	84	2.08	1.5	123	0.016	97	96	29.0	0.97	1.11	15.3750353	102.31	174.29	167.77	71.53	173.84	274.91434	90	91	84		1.001	9.215	944
1401	227.331	227.103		0.16	0.16	1.30	1.04	0.26	97	96	84	2.06	1.5	123	0.015	100	101	28.4	0.60	1.05	15.3574715	103.30	175.25	168.74	71.53	174.82	276.58835	90	91	84		1.001	8.740	904
1402	227.492	227.263		0.16	0.16	1.30	1.05	0.26	96	96	84	2.06	1.5	124	0.015	101	100	27.9	0.44	1.07	15.4223957	104.37	176.37	169.84	71.56	175.94	277.76672	91	91	84		1.001	8.899	930
1403	227.653	227.424		0.16	0.16	1.31	1.05	0.26	97	96	84	2.06	1.5	123	0.015	100	100	26.9	1.01	1.07	15.3652115	105.36	177.43	170.89	71.58	176.94	278.30936	91	91	84		1.001	8.900	939
1404	227.814	227.586		0.16	0.16	1.31	1.05	0.26	97	96	84	2.07	1.5	123	0.016	97	98	26.4	0.54	1.17	15.4163494	106.51	178.58	171.93	71.59	178.10	277.59638	89	89	84		1.001	9.705	1035
1405	227.974	227.746		0.16	0.16	1.31	1.04	0.26	97	96	84	2.08	1.5	123	0.015	100	100	25.5	0.90	1.11	15.3936872	107.39	179.42	172.71	71.63	179.02	277.60953	87	87	84		1.001	9.216	991
1406	228.135	227.906		0.16	0.16	1.31	1.05	0.26	97	96	84	2.07	1.5	122	0.016	97	96	25.1	0.36	1.09	15.4414196	108.16	180.42	173.66	71.73	179.89	276.30066	85	85	84		1.001	9.059	981
1407	228.296	228.067		0.16	0.16	1.30	1.05	0.26	97	96	84	2.08	1.5	122	0.015	100	100	24.2	0.93	1.13	15.4897738	109.08	181.31	174.49	71.77	180.84	275.88251	85	85	84		1.001	9.382	1025
1408	228.457	228.229		0.16	0.16	1.30	1.05	0.26	97	96	84	2.08	1.5	122	0.016	97	98	23.7	0.55	1.09	15.432004	109.78	182.14	175.25	71.90	181.68	275.91135	84	84	84		1.001	9.056	995
1409	228.618	228.390		0.16	0.16	1.31	1.10	0.26	97	96	84	2.05	1.6	118	0.015	100	100	23.2	0.48	1.14	15.4702196	110.73	183.14	176.18	71.96	182.69	272.06857	84	84	84		1.001	9.481	1051
1410	228.780	228.555		0.16	0.17	1.30	1.09	0.26	97	96	84	2.07	1.6	103	0.015	99	101	22.9	0.32	1.14	15.4796038	111.52	183.92	177.00	71.98	183.50	250.40903	83	83	84		1.001	9.448	1055
1411	228.941	228.720		0.16	0.16	1.30	1.09	0.26	97	96	84	2.06	1.6	99	0.014	102	104	22.4	0.42	1.05	15.4611378	112.07	184.52	177.55	72.00	184.07	237.51964	82	82	84		1.001	8.732	980
1412	229.103	228.885		0.16	0.16	1.30	1.09	0.26	97	96	84	2.07	1.6	96	0.015	99	100	22.4	0.05	1.09	15.3772278	112.47	184.85	177.91	72.03	184.50	229.38705	81	81	84		1.001	9.054	1019
1413	229.265	229.050		0.16	0.17	1.30	1.09	0.26	97	96	84	2.07	1.6	96	0.014	102	104	22.1	0.26	1.09	15.5181093	112.60	184.95	178.05	72.01	184.61	222.29518	81	81	84		1.001	9.047	1020

Elapsed Time	Particulate Sampling Data																		Fuel Weight, lb		Flow, gpm		Temperature Data, oF									Stack			
	Gas Meter Cubic Feet (1)	Gas Meter Cubic Feet (2)	Gas Meter Cubic Feet (amb)	Sample Rate, cfm (1)	Sample Rate, cfm (2)	Orifice dH (1)	Orifice dH (2)	Orifice dH (amb)	Meter oF (1)	Meter oF (2)	Meter oF (amb)	Meter Vac. In. Hg. (1)	Meter Vac. In. Hg. (2)	Dilution Tunnel Temp.	Dilution Tunnel dP	Pro. Rate (%) (1)	Pro. Rate (%) (2)	Scale Reading	Weight Change	Load Side Liquid Flow Rate	Boiler Side Liquid Flow Rate (optional)	Thermopile ΔT	Boiler to Heat Exch. Temp.	Heat Exch to Boiler Temp.	Inlet Load Temp.	Outlet Load Temp.	Stack	Filter (1)	Filter (2)	Ambient	Draft In. H2O	Specific Heat of Inlet Water (BTU/lb-°F)	Mass Flow Rate of Inlet Water (lb/min)	Heat Output, Btu
1414	229.426	229.215		0.16	0.16	1.30	1.09	0.26	97	96	84	2.06	1.6	95	0.015	98	100	21.8	0.28	1.09	15.4611292	112.63	185.06	178.08	72.10	184.73	215.92229	81	81	84		1.001	9.053	1021
1415	229.588	229.380		0.16	0.16	1.30	1.09	0.26	97	96	84	2.06	1.6	94	0.014	102	104	21.7	0.17	1.01	15.385478	112.61	185.07	178.41	72.12	184.73	211.1391	81	81	84		1.001	8.408	948
1416	229.750	229.545		0.16	0.16	1.30	1.09	0.26	97	96	84	2.06	1.6	93	0.016	95	97	21.6	0.04	1.15	15.3913841	112.57	185.04	178.15	72.16	184.73	207.22655	81	81	84		1.001	9.542	1075
1417	229.912	229.710		0.16	0.17	1.30	1.09	0.26	97	96	84	2.06	1.6	93	0.016	95	97	21.4	0.24	1.07	15.4235735	112.58	185.07	178.10	72.17	184.75	204.05023	81	81	84		1.001	8.895	1002
1418	230.073	229.874		0.16	0.16	1.30	1.09	0.26	97	96	84	2.06	1.6	92	0.014	101	103	21.5	-0.14	1.07	15.448822	112.62	185.09	178.58	72.15	184.76	201.5549	81	81	84		1.001	8.893	1003
1419	230.235	230.039		0.16	0.16	1.30	1.09	0.26	97	96	84	2.05	1.6	91	0.013	105	107	21.3	0.20	1.11	15.4492912	112.52	185.07	178.11	72.20	184.72	200.30646	81	81	84		1.001	9.221	1039
1420	230.397	230.205		0.16	0.17	1.30	1.09	0.26	97	96	84	2.07	1.6	90	0.014	102	104	21.2	0.10	1.09	15.4787064	112.52	185.05	178.05	72.21	184.72	198.45961	82	81	84		1.001	9.055	1020
1421	230.559	230.370		0.16	0.16	1.30	1.09	0.26	97	97	84	2.05	1.6	90	0.014	102	103	21.1	0.13	1.09	15.4321985	112.40	184.97	178.05	72.25	184.65	196.29509	82	82	84		1.001	9.061	1020
1422	230.720	230.535		0.16	0.16	1.30	1.09	0.26	97	97	84	2.06	1.6	90	0.015	98	100	21.1	0.04	1.08	15.359231	112.30	184.86	177.97	72.27	184.56	193.92012	82	82	84		1.001	8.958	1007
1423	230.882	230.701		0.16	0.17	1.30	1.09	0.26	97	97	84	2.07	1.6	90	0.014	102	104	21.0	0.10	1.09	15.4951735	112.18	184.74	177.84	72.26	184.44	191.52414	83	82	84		1.001	9.045	1016
1424	231.044	230.865		0.16	0.16	1.31	1.09	0.26	97	97	84	2.06	1.6	90	0.015	98	99	21.1	-0.09	1.03	15.3846197	112.05	184.64	177.76	72.30	184.35	189.18976	83	83	84		1.001	8.572	962
1425	231.206	231.030		0.16	0.16	1.31	1.09	0.26	97	97	84	2.07	1.6	90	0.017	92	94	21.0	0.03	1.09	15.4989233	111.97	184.56	177.72	72.31	184.28	186.92224	83	83	84		1.001	9.054	1015
1426	231.367	231.195		0.16	0.16	1.31	1.09	0.26	97	97	84	2.07	1.6	90	0.015	98	100	20.9	0.10	1.11	15.3847637	111.85	184.41	177.53	72.25	184.10	184.71716	83	83	84		1.001	9.217	1032
1427	231.529	231.360		0.16	0.17	1.31	1.09	0.26	97	97	84	2.07	1.6	89	0.014	101	103	20.9	-0.02	1.11	15.420969	111.82	184.32	177.39	72.22	184.03	182.54587	84	83	84		1.001	9.215	1032
1428	231.691	231.525		0.16	0.16	1.30	1.09	0.26	97	97	84	2.07	1.6	89	0.016	95	96	20.9	0.04	1.11	15.5087662	111.81	184.24	177.31	72.13	183.94	180.54112	84	84	84		1.001	9.214	1031
1429	231.852	231.690		0.16	0.16	1.30	1.09	0.26	97	97	84	2.07	1.6	89	0.015	97	99	20.9	-0.04	1.05	15.3946362	111.75	184.08	177.12	72.05	183.80	178.59184	84	84	84		1.001	8.732	977
1430	232.014	231.855		0.16	0.16	1.31	1.09	0.26	97	97	84	2.07	1.6	89	0.014	101	103	21.0	-0.05	1.05	15.4317207	111.67	183.98	177.00	72.00	183.67	176.67499	84	84	84		1.001	8.730	976
1431	232.176	232.021		0.16	0.17	1.31	1.09	0.26	97	97	84	2.06	1.6	89	0.016	95	97	21.0	0.00	1.11	15.2808533	111.57	183.86	176.90	71.99	183.55	174.88208	84	84	84		1.001	9.194	1027
1432	232.338	232.186		0.16	0.17	1.31	1.09	0.26	97	97	84	2.06	1.6	89	0.015	98	99	20.9	0.09	1.08	15.4173861	111.41	183.71	176.79	72.01	183.43	173.03731	84	84	84		1.001	9.017	1006
1433	232.499	232.351		0.16	0.16	1.31	1.09	0.26	97	97	84	2.07	1.6	89	0.015	97	99	20.9	0.00	1.08	15.4897575	111.27	183.57	176.66	72.01	183.28	171.23169	84	84	84		1.001	8.998	1002
1434	232.661	232.516		0.16	0.16	1.30	1.09	0.26	97	97	84	2.06	1.6	89	0.017	92	93	20.9	0.03	1.09	15.4322271	111.08	183.41	176.53	72.04	183.12	169.49266	85	84	84		1.001	9.052	1007
1435	232.823	232.681		0.16	0.17	1.30	1.08	0.26	97	97	84	2.08	1.6	89	0.014	101	103	20.9	0.00	1.05	15.4609756	110.85	183.22	176.34	72.09	182.93	167.8685	85	84	84		1.001	8.730	969
1436	232.985	232.846		0.16	0.16	1.31	1.09	0.26	97	97	84	2.07	1.6	89	0.015	98	99	21.0	-0.12	1.11	15.3845787	110.68	183.10	176.27	72.13	182.81	166.3315	85	85	84		1.001	9.219	1022
1437	233.146	233.011		0.16	0.16	1.31	1.09	0.26	97	97	84	2.06	1.6	89	0.015	97	99	20.9	0.09	1.11	15.4229364	110.47	182.92	176.06	72.16	182.63	164.87848	85	85	84		1.001	9.214	1019
1438	233.308	233.176		0.16	0.16	1.30	1.09	0.26	97	97	84	2.07	1.6	89	0.015	98	99	21.0	-0.06	1.05	15.4901047	110.28	182.76	175.96	72.17	182.45	163.40157	85	85	84		1.001	8.727	964
1439	233.469	233.341		0.16	0.17	1.30	1.09	0.26	97	97	84	2.07	1.6	89	0.014	101	103	21.0	-0.02	1.07	15.3845425	110.04	182.57	175.76	72.24	182.29	161.95723	85	85	84		1.001	8.896	980
1440	233.631	233.507		0.16	0.17	1.30	1.09	0.26	97	97	84	2.06	1.6	89	0.014	101	104	20.9	0.11	1.11	15.3937826	109.81	182.39	175.73	72.30	182.11	160.53227	85	85	84		1.001	9.221	1014
1441	233.793	233.671		0.16	0.16	1.31	1.09	0.26	97	97	84	2.07	1.6	89	0.015	98	99	21.0	-0.08	1.07	15.4701319	109.49	182.18	175.53	72.41	181.90	159.09177	85	85	84		1.001	8.893	975
1442	233.955	233.836		0.16	0.17	1.30	1.09	0.26	97	97	84	2.06	1.6	89	0.014	101	103	20.9	0.03	1.11	15.4320154	109.22	182.00	175.25	72.46	181.68	157.83743	85	85	84		1.001	9.219	1008
1443	234.116	234.001		0.16	0.16	1.30	1.09	0.26	97	97	84	2.07	1.6	89	0.015	97	99	21.0	-0.06	1.10	15.4514818	109.01	181.85	175.17	72.54	181.54	156.56126	85	85	84		1.001	9.109	994
1444	234.278	234.166		0.16	0.16	1.30	1.09	0.26	97	97	84	2.06	1.6	89	0.015	98	99	21.0	0.00	1.05	15.4172096	108.75	181.63	175.01	72.60	181.35	155.36354	85	85	84		1.001	8.733	951
1445	234.440	234.331		0.16	0.16	1.30	1.09	0.26	97	97	84	2.06	1.6	88	0.016	95	96	21.0	0.00	1.09	15.4856319	108.55	181.44	174.78	72.61	181.16	154.27564	85	85	84		1.001	9.057	984
1446	234.601	234.496		0.16	0.17	1.30	1.09	0.26	97	97	84	2.06	1.6	88	0.014	101	103	20.9	0.05	1.13	15.4795408	108.36	181.27	174.65	72.63	180.99	153.21762	85	85	84		1.001	9.379	1018
1447	234.763	234.661		0.16	0.16	1.31	1.09	0.26	97	97	84	2.06	1.6	89	0.014	101	103	21.0	-0.02	1.13	15.4130745	108.01	181.04	174.52	72.73	180.75	152.23926	85	85	84		1.001	9.381	1014
1448	234.925	234.827		0.16	0.17	1.31	1.09	0.26	97	97	84	2.06	1.6	89	0.013	105	107	21.0	0.00	1.11	15.4897175	107.87	180.88	174.41	72.73	180.60	151.28941	85	85	84		1.001	9.217	995
1449	235.087	234.992		0.16	0.16	1.31	1.09	0.26	97	97	84	2.07	1.6	88	0.016	95	96	21.0	-0.01	1.13	15.4515648	107.63	180.62	174.10	72.74	180.37	150.33183	85	85	84		1.001	9.380	1011
1450	235.248	235.157		0.16	0.17	1.30	1.09	0.26	97	97	84	2.08	1.6	89	0.014	101	103	21.2	-0.19	1.07	15.3462439	107.47	180.45	173.91	72.71	180.18	149.23886	85	85	84		1.001	8.892	957
1451	235.410	235.322		0.16	0.16	1.31	1.09	0.26	97	97	84	2.08	1.6	88	0.016	95	96	21.1	0.02	1.05	15.4517832	107.23	180.26	173.67	72.73	179.96	148.59401	85	85	84		1.001	8.735	938
1452	235.572	235.487		0.16	0.16	1.31	1.09	0.26	97	97	84	2.07	1.6	88	0.014	101	103	21.2	-0.11	1.17	15.3462105	107.02	180.05	173.56	72.74	179.77	147.70697	85	85	84		1.001	9.689	1038
1453	235.733	235.652		0.16	0.16	1.31	1.09	0.26	97	97	84	2.07	1.6	88	0.015	97	99	21.1	0.10	1.07	15.4897871	106.83	179.84	173.28	72.74	179.57	146.76689	85	85	84		1.001	8.894	951
1454	235.895	235.817		0.16	0.17	1.30	1.09	0.26	97	97	84	2.06	1.6	88	0.015	98	99	21.0	0.18	1.05	15.4787378	106.58	179.58	173.11	72.74	179.32	145.83934	85	85	84		1.001	8.728	931
1455	236.057	235.982		0.16	0.16	1.30	1.09	0.26	97	97	84	2.06	1.6	88	0.014	101	103	21.1	-0.08	1.06	15.4320698	106.41	179.41	172.85	72.70	179.12	145.14475	85	85	84		1.001	8.817	939
1456	236.218	236.147		0.16	0.16	1.31	1.09	0.26	97	97	84	2.06	1.6	88	0.015	97	99	21.1	-0.06	1.07	15.5356979	106.25	179.14	172.58	72.63	178.87	144.38422	85	85	84		1.001	8.893	946
1457	236.380	236.313		0.16	0.17	1.31	1.09	0.26	97	97	84	2.07	1.6	88	0.014	101	103	21.1	0.04	1.11	15.4229221	105.97	178.96	172.41	72.71	178.68	143.70499	85	85	84		1.001	9.220	978
1458	236.542	236.478		0.16	0.17	1.31	1.09	0.26	97	97	84	2.07	1.6	88	0.015	98	99	21.1	0.00	1.11	15.4078598	105.79	178.75	172.21	72.70	178.49	143.00028	85	85	84		1.001	9.217	976
1459	236.703	236.643		0.16	0.16	1.31	1.08	0.26	97	97	84	2.07	1.6	88	0.014	101	103	21.1	0.02	1.03	15.3751001	105.48	178.52	172.02	72.77	178.26	142.07985	85	85	84		1.001	8.570	905
1460	236.865	236.807		0.16	0.16	1.30	1.09	0.26	97	97	84	2.06	1.6	88	0.015	98	99	21.2	-0.19	1.09	15.4583073	105.28	178.29	171.83	72.73	178.01	141.61232	85	85	84		1.001	9.056	955
1461	237.027	236.973		0.16	0.17	1.30	1.09	0.26	97	97	84	2.05	1.6	88	0.015	98	100	21.0	0.20	1.05	15.3659849	105.08	178.05	171.66	72.72	177.80	140.84248	85	85	84		1.001	8.734	919
1462	237.188	237.137		0.16	0.16	1.31	1.09	0.26	97	97	84	2.07	1.6	88	0.013	105	106	21.0	0.00	1.09	15.4702425	104.92	177.89	171.51	72.70	177.62	139.83431	85	85	84		1.001	9.056	951
1463	237.350	237.303		0.16	0.17	1.31	1.09	0.26	97	97	84	2.07	1.6	88	0.015	98	100	21.2	-0.14	1.11	15.4702759	104.68	177.64	171.31	72.72	177.40	139.15466	85	85	84		1.001	9.215	966
1464	237.512	237.468		0.16	0.16	1.31	1.09	0.26	97	97	84	2.06	1.6	88	0.017	92	93	21.2	0.04	1.06	15.4611244	104.41	177.41	170.97	72.73	177.14	138.61456	85	85	84		1.001	8.826	923
1465	237.673	237.633		0.16	0.17	1.31	1.09	0.26	97	97	84	2.07	1.6	88	0.014	101	103	21.1	0.03	1.09	15.3894711	104.20	177.16	170.72	72.71	176.90	138.11685	85	85	84		1.001	9.037	943
1466	237.835	237.799		0.16	0.17	1.30	1.09	0.26	97	97	84	2.08	1.6	88	0.015	98	100	21.2	-0.04	1.13	15.462779	103.88	176.94	170.50	72.78	176.66	137.3495	85	85	84		1.001	9.376	975
1467	237.997	237.963		0.16	0.16	1.31	1.09	0.26	97	97	84	2.06	1.6	88	0.014	101	102	21.2	-0.06	1.09	15.4413652	103.67	176.72	170.27	72.76	176.43	136.73084	85	85	84		1.001	9.052	940
1468	238.158	238.128		0.16	0.16	1.31	1.09	0.26	97	97	84	2.07	1.6	88	0.015	97	99	21.4	-0.18	1.07	15.4321918	103.43	176.50	170.08	72.81	176.24	136.00734	85	85	84		1.001	8.894	921
1469	238.320	238.293		0.16	0.17	1.31	1.09	0.26	97	97	84	2.06	1.6	88	0.015	98	99	21.3	0.09	1.11	15.4132328	103.19	176.25	169.83	72.80	175.99	136.02554	85	85	84		1.001	9.214	952
1470	238.482	238.458		0.16	0.16	1.30	1.09	0.26	97	97	84	2.07	1.6	88	0.013	105	107	21.2	0.10	1.05	15.4798126	102.94	176.03	169.70	72.84	175.78	135.7392	85	85	84		1.001	8.730	900
1471	238.643	238.623		0.16	0.16	1.31	1.09	0.26	97	97	84	2.07	1.6	88	0.015	97	99	21.2	0.01	1.07	15.4798803	102.73	175.83	169.48	72.87	175.59	134.79395	85	85	84		1.001	8.894	915
1472	238.805	238.788		0.16	0.17	1.31	1.09	0.26	97	97	84	2.08	1.6	88	0.015	98	99	21.2	-0.01	1.07	15.4621563	102.45	175.59	169.31	72.88	175.33	134.42517	85	85	84		1.001	8.893	912
1473	238.967	238.953		0.16	0.16	1.31	1.09	0.26	97	97	84	2.08	1.6	88	0.014	101	103	21.2	-0.01	1.09	15.4796505	102.18	175.34	169.13	72.89	175.08	133.81752	85	85	84		1.001	9.049	926
1474	239.129	239.119		0.16	0.17	1.31	1.09	0.26	97	97	84	2.07	1.6	88	0.016	95	97	21.2	-0.03	1.07	15.4610167	101.94	175.10	168.87	72.92	174.86	133.12903	85	85	84		1.001	8.895	908
1475	239.290	239.284		0.16	0.16	1.31	1.09	0.26	97	97	84	2.06	1.6	88	0.014	101	103	21.2	0.08	1.09	15.432128	101.70	174.83	168.58	72.89	174.59	132.49518	85	85	84		1.001	9.047	921

Elapsed Time	Particulate Sampling Data																	Fuel Weight, lb		Flow, gpm		Temperature Data, oF									Stack			
	Gas Meter Cubic Feet (1)	Gas Meter Cubic Feet (2)	Gas Meter Cubic Feet (amb)	Sample Rate, cfm (1)	Sample Rate, cfm (2)	Orifice dH (1)	Orifice dH (2)	Orifice dH (amb)	Meter oF (1)	Meter oF (2)	Meter oF (amb)	Meter Vac. In. Hg. (1)	Meter Vac. In. Hg. (2)	Dilution Tunnel Temp.	Dilution Tunnel dP	Pro. Rate (%) (1)	Pro. Rate (%) (2)	Scale Reading	Weight Change	Load Side Liquid Flow Rate	Boiler Side Liquid Flow Rate (optional)	Thermopile ΔT	Boiler to Heat Exch. Temp.	Heat Exch to Boiler Temp.	Inlet Load Temp.	Outlet Load Temp.	Stack	Filter (1)	Filter (2)	Ambient	Draft In. H2O	Specific Heat of Inlet Water (BTU/lb-°F)	Mass Flow Rate of Inlet Water (lb/min)	Heat Output, Btu
1476	239.452	239.449		0.16	0.17	1.31	1.09	0.26	97	97	84	2.07	1.6	88	0.015	98	99	21.1	0.04	1.09	15.4898481	101.54	174.60	168.39	72.84	174.37	132.21146	85	85	84		1.001	9.054	920
1477	239.614	239.614		0.16	0.16	1.31	1.09	0.26	97	97	84	2.07	1.6	88	0.014	101	103	21.3	-0.20	1.17	15.4704065	101.18	174.38	168.16	72.97	174.15	131.74762	85	85	84		1.001	9.698	982
1478	239.776	239.779		0.16	0.16	1.31	1.09	0.26	98	97	84	2.08	1.6	88	0.014	101	103	21.3	0.04	1.11	15.3558464	100.90	174.15	167.88	72.99	173.88	131.65405	85	85	84		1.001	9.218	931
1479	239.937	239.943		0.16	0.16	1.31	1.09	0.26	97	97	84	2.06	1.6	96	0.013	105	107	21.1	0.17	1.09	15.4322166	100.69	173.90	167.66	72.97	173.66	157.79816	86	86	84		1.001	9.054	913
1480	240.099	240.109		0.16	0.17	1.31	1.09	0.26	97	97	84	2.06	1.6	90	0.014	102	104	21.0	0.14	1.09	15.4042006	100.48	173.65	167.38	72.97	173.44	149.76038	85	85	84		1.001	9.052	911
1481	240.261	240.274		0.16	0.16	1.31	1.09	0.26	97	97	84	2.06	1.6	88	0.014	101	103	21.1	-0.18	1.11	15.4053993	100.23	173.39	167.18	72.93	173.16	144.41505	85	86	84		1.001	9.213	924
1482	240.424	240.440		0.16	0.17	1.31	1.10	0.26	97	97	84	2.04	1.6	88	0.014	102	103	21.0	0.12	1.11	15.4992704	100.01	173.30	167.13	73.04	173.05	140.8703	85	86	84		1.001	9.215	923
1483	240.586	240.606		0.16	0.17	1.31	1.09	0.26	97	97	84	2.05	1.6	88	0.015	98	100	20.9	0.10	1.07	15.3176937	99.72	173.00	166.87	73.06	172.78	138.4285	85	86	84		1.001	8.896	888
1484	240.748	240.771		0.16	0.16	1.31	1.09	0.26	97	97	84	2.06	1.6	88	0.013	105	107	21.0	-0.08	1.03	15.4226856	99.52	172.83	166.62	73.04	172.56	136.74728	85	86	84		1.001	8.571	854
1485	240.910	240.936		0.16	0.17	1.31	1.09	0.26	97	97	84	2.04	1.6	88	0.013	105	107	20.9	0.06	1.14	15.4797926	99.31	172.62	166.51	73.06	172.37	135.27229	85	86	84		1.001	9.511	946
1486	241.072	241.101		0.16	0.16	1.31	1.09	0.26	97	97	84	2.04	1.6	88	0.014	101	103	21.0	-0.07	1.03	15.3653202	99.02	172.33	166.28	73.08	172.10	133.82086	85	86	84		1.001	8.544	847
1487	241.234	241.266		0.16	0.16	1.31	1.09	0.26	97	97	84	2.06	1.6	88	0.014	101	103	21.1	-0.05	1.11	15.3855457	98.87	172.16	166.11	73.07	171.94	132.88153	85	86	84		1.001	9.218	912
1488	241.396	241.431		0.16	0.17	1.31	1.09	0.26	97	97	84	2.05	1.6	88	0.013	105	107	21.0	0.07	1.07	15.4226255	98.61	171.91	165.91	73.08	171.69	131.92651	85	86	84		1.001	8.893	878
1489	241.558	241.597		0.16	0.17	1.31	1.09	0.26	98	97	84	2.04	1.6	88	0.015	98	100	21.1	-0.10	1.13	15.5423374	98.34	171.69	165.72	73.10	171.44	131.14151	85	86	84		1.001	9.376	923
1490	241.721	241.762		0.16	0.16	1.31	1.09	0.26	98	97	84	2.06	1.6	88	0.014	102	103	21.1	-0.06	1.07	15.4897966	98.13	171.45	165.42	73.05	171.19	130.60841	85	86	84		1.001	8.893	874
1491	241.883	241.928		0.16	0.17	1.31	1.10	0.26	98	97	84	2.05	1.6	88	0.014	101	103	21.1	0.04	1.07	15.4389048	97.85	171.26	165.26	73.13	170.98	130.21869	85	86	84		1.001	8.893	871
1492	242.045	242.094		0.16	0.17	1.31	1.10	0.26	98	97	84	2.04	1.6	88	0.013	105	107	21.0	0.15	1.17	15.5085182	97.57	170.94	164.97	73.14	170.71	129.60289	85	85	84		1.001	9.701	948
1493	242.207	242.260		0.16	0.17	1.31	1.10	0.26	98	97	84	2.06	1.6	88	0.013	105	107	21.0	0.00	1.11	15.5084286	97.34	170.72	164.69	73.11	170.45	129.19725	85	85	84		1.001	9.217	898
1494	242.369	242.425		0.16	0.17	1.31	1.09	0.26	98	97	84	2.06	1.6	88	0.015	98	99	21.1	-0.13	0.95	15.4414196	97.17	170.55	164.52	73.14	170.30	128.3159	85	85	84		1.001	7.919	770
1495	242.532	242.590		0.16	0.16	1.31	1.09	0.26	98	97	84	2.05	1.6	88	0.014	102	103	21.0	0.07	1.07	15.3937931	96.96	170.30	164.30	73.10	170.06	127.78032	85	85	84		1.001	8.896	864
1496	242.694	242.756		0.16	0.17	1.31	1.09	0.26	98	97	84	2.05	1.6	88	0.013	105	107	21.0	0.02	1.05	15.4318781	96.68	170.08	164.06	73.16	169.84	127.51114	85	85	84		1.001	8.731	845
1497	242.856	242.921		0.16	0.16	1.31	1.09	0.26	98	97	84	2.06	1.6	88	0.013	105	107	21.0	-0.03	1.05	15.2884007	96.40	169.84	163.89	73.19	169.58	126.73571	85	85	84		1.001	8.739	843
1498	243.019	243.087		0.16	0.17	1.31	1.09	0.26	98	97	84	2.06	1.6	88	0.014	102	103	21.1	-0.06	1.07	15.36553	96.23	169.62	163.71	73.17	169.40	126.42913	85	85	84		1.001	8.891	857
1499	243.181	243.252		0.16	0.17	1.30	1.10	0.26	98	97	84	2.06	1.6	88	0.014	101	103	21.1	-0.01	1.11	15.45156	95.98	169.42	163.52	73.18	169.16	126.22177	85	85	84		1.001	9.217	886
1500	243.343	243.418		0.16	0.17	1.31	1.10	0.26	98	97	84	2.06	1.6	88	0.013	105	107	21.0	0.09	1.13	15.4518261	95.65	169.05	163.39	73.18	168.83	125.84641	85	85	84		1.001	9.377	898
1501	243.505	243.583		0.16	0.16	1.31	1.10	0.26	98	97	84	2.05	1.6	88	0.014	101	103	21.1	-0.10	1.09	15.4228983	95.44	168.92	162.99	73.21	168.65	125.19404	85	85	84		1.001	9.053	865
1502	243.668	243.749		0.16	0.17	1.31	1.10	0.26	98	97	84	2.05	1.6	88	0.013	106	107	21.0	0.12	1.09	15.4992275	95.19	168.62	162.79	73.21	168.40	124.75957	85	85	84		1.001	9.054	863
1503	243.830	243.915		0.16	0.17	1.31	1.09	0.26	98	97	84	2.05	1.6	88	0.015	98	100	21.0	0.00	1.03	15.4228868	95.06	168.46	162.65	73.15	168.21	124.40263	85	85	84		1.001	8.567	815
1504	243.992	244.080		0.16	0.17	1.31	1.10	0.26	98	97	84	2.06	1.6	88	0.015	98	99	21.1	-0.07	1.03	15.4517412	94.84	168.22	162.43	73.14	167.98	124.45353	85	85	84		1.001	8.571	814
1505	244.154	244.246		0.16	0.17	1.31	1.09	0.26	98	97	84	2.06	1.6	88	0.014	101	103	21.1	-0.01	1.09	15.394309	94.74	167.98	162.13	73.02	167.76	124.00169	85	85	84		1.001	9.055	859
1506	244.317	244.411		0.16	0.16	1.31	1.09	0.26	98	97	84	2.05	1.6	88	0.013	106	107	21.1	-0.03	1.16	15.4032764	94.56	167.85	162.03	73.04	167.60	123.3052	85	85	84		1.001	9.687	917
1507	244.479	244.577		0.16	0.17	1.31	1.10	0.26	98	97	84	2.06	1.6	88	0.014	101	103	21.2	-0.13	1.13	15.4516506	94.40	167.55	161.77	72.93	167.34	122.52292	85	85	84		1.001	9.396	888
1508	244.641	244.743		0.16	0.17	1.31	1.10	0.26	98	97	84	2.05	1.6	88	0.014	101	103	21.1	0.14	1.01	15.4538546	94.08	167.27	161.51	72.96	167.04	122.84304	85	85	84		1.001	8.407	792
1509	244.803	244.908		0.16	0.16	1.31	1.09	0.26	98	97	84	2.06	1.6	88	0.015	98	99	21.3	-0.16	1.09	15.5368004	93.89	167.09	161.39	72.96	166.85	123.59266	85	85	84		1.001	9.052	851
1510	244.965	245.073		0.16	0.17	1.31	1.10	0.26	98	97	84	2.06	1.6	92	0.013	105	107	21.2	0.11	1.09	15.3846054	93.76	166.83	161.06	72.82	166.58	145.47138	85	86	84		1.001	9.055	850
1511	245.127	245.238		0.16	0.16	1.31	1.10	0.26	98	97	84	2.06	1.6	89	0.015	98	99	21.1	0.09	1.11	15.432498	93.55	166.61	160.84	72.81	166.36	138.35318	85	85	84		1.001	9.215	863
1512	245.289	245.404		0.16	0.17	1.32	1.10	0.26	98	97	84	2.06	1.6	88	0.015	98	100	21.2	-0.12	1.15	15.4518509	93.37	166.38	160.62	72.76	166.13	134.15891	85	85	84		1.001	9.539	892
1513	245.451	245.571		0.16	0.17	1.32	1.10	0.26	98	97	84	2.04	1.6	88	0.012	109	112	21.1	0.06	1.07	15.4796734	93.15	166.13	160.40	72.76	165.90	131.26862	85	85	84		1.001	8.892	829
1514	245.613	245.736		0.16	0.16	1.31	1.10	0.26	98	97	84	2.05	1.6	88	0.015	98	99	21.1	-0.01	1.07	15.4524164	92.94	165.98	160.29	72.79	165.73	129.05423	85	85	84		1.001	8.891	827
1515	245.776	245.902		0.16	0.17	1.31	1.10	0.26	98	97	84	2.04	1.6	88	0.013	106	107	21.1	0.06	1.09	15.4704742	92.68	165.72	160.08	72.80	165.48	127.40709	85	85	84		1.001	9.055	840
1516	245.938	246.067		0.16	0.17	1.32	1.09	0.26	98	97	84	2.05	1.6	88	0.013	105	107	21.1	-0.06	1.09	15.367033	92.37	165.48	159.83	72.86	165.23	126.38901	85	85	84		1.001	9.077	839
1517	246.100	246.232		0.16	0.16	1.31	1.09	0.26	98	97	84	2.04	1.6	88	0.014	101	103	21.1	0.01	1.11	15.3817482	92.13	165.28	159.60	72.92	165.05	125.75155	85	85	84		1.001	9.207	849
1518	246.262	246.398		0.16	0.17	1.32	1.09	0.26	98	97	84	2.05	1.6	88	0.013	105	107	21.1	0.05	1.07	15.3698273	91.89	165.04	159.35	72.92	164.80	124.48217	85	85	84		1.001	8.858	815
1519	246.425	246.564		0.16	0.17	1.31	1.10	0.26	98	97	84	2.05	1.6	88	0.014	102	103	21.1	-0.06	1.01	15.4521017	91.63	164.83	159.20	73.00	164.63	124.51038	85	85	84		1.001	8.408	771
1520	246.587	246.729		0.16	0.17	1.32	1.10	0.26	98	97	84	2.05	1.6	88	0.016	95	96	21.0	0.13	0.97	15.4586792	91.30	164.59	158.93	73.02	164.32	123.39263	85	85	84		1.001	8.082	739
1521	246.749	246.895		0.16	0.17	1.31	1.10	0.26	98	97	84	2.04	1.6	88	0.015	98	100	21.2	-0.21	1.07	15.5161762	91.08	164.38	158.73	73.04	164.12	123.27562	85	85	84		1.001	8.893	811
1522	246.911	247.060		0.16	0.16	1.31	1.09	0.26	98	97	84	2.04	1.6	88	0.014	101	103	21.0	0.26	1.11	15.3861408	90.86	164.14	158.50	73.08	163.94	122.87571	85	85	84		1.001	9.215	838
1523	247.073	247.226		0.16	0.17	1.31	1.10	0.26	98	97	84	2.05	1.6	88	0.014	101	103	21.1	-0.10	1.11	15.4994593	90.55	163.93	158.34	73.13	163.68	122.31239	85	85	84		1.001	9.216	835
1524	247.236	247.393		0.16	0.17	1.32	1.10	0.26	98	97	84	2.05	1.6	88	0.014	102	104	21.0	0.05	1.15	15.4911213	90.36	163.74	158.15	73.16	163.52	121.93696	85	85	84		1.001	9.538	863
1525	247.398	247.558		0.16	0.16	1.31	1.09	0.26	98	97	84	2.05	1.6	87	0.016	95	96	21.1	-0.05	1.09	15.4228754	90.04	163.48	157.91	73.21	163.25	121.49847	85	85	84		1.001	9.058	817
1526	247.561	247.723		0.16	0.17	1.31	1.10	0.26	98	97	84	2.06	1.6	87	0.014	102	103	21.0	0.04	1.07	15.4516621	89.82	163.30	157.74	73.27	163.09	121.19675	85	85	84		1.001	8.903	801
1527	247.723	247.889		0.16	0.17	1.31	1.09	0.26	98	97	84	2.04	1.6	88	0.014	101	103	21.0	0.00	1.13	15.5565367	89.49	162.97	157.40	73.28	162.76	120.74636	85	85	84		1.001	9.364	839
1528	247.885	248.054		0.16	0.16	1.31	1.10	0.26	98	97	84	2.05	1.6	87	0.014	101	103	21.0	-0.03	1.09	15.4693975	89.31	162.81	157.30	73.27	162.58	120.62879	85	85	84		1.001	9.026	807
1529	248.047	248.220		0.16	0.17	1.31	1.09	0.26	98	97	84	2.05	1.6	87	0.015	98	100	21.0	0.01	1.08	15.4799395	89.10	162.58	157.02	73.27	162.37	119.89307	85	85	84		1.001	8.973	800
1530	248.209	248.385		0.16	0.16	1.31	1.10	0.26	98	97	84	2.04	1.6	87	0.014	101	103	21.1	-0.03	1.01	15.4127903	88.87	162.35	156.85	73.26	162.13	121.11359	85	85	84		1.001	8.406	748
1531	248.372	248.550		0.16	0.17	1.30	1.10	0.26	98	97	84	2.05	1.6	94	0.015	99	100	20.9	0.13	1.11	15.4132433	88.65	162.15	156.67	73.29	161.94	147.24617	85	86	84		1.001	9.215	818
1532	248.534	248.716		0.16	0.17	1.31	1.10	0.26	98	97	84	2.06	1.6	97	0.014	102	104	20.7	0.23	1.03	15.3462849	88.40	161.91	156.41	73.29	161.69	162.8737	85	86	84		1.001	8.568	758
1533	248.696	248.881		0.16	0.16	1.31	1.10	0.26	98	97	84	2.06	1.6	99	0.014	102	104	20.2	0.46	1.09	15.4233303	88.16	161.65	156.20	73.31	161.47	177.30977	86	86	84		1.001	9.051	799
1534	248.858	249.047		0.16	0.17	1.31	1.11	0.26	98	97	84	2.05	1.6	101	0.013	106	109	19.7	0.57	1.09	15.4587603	88.20	161.72	156.27	73.27	161.46	191.76451	86	86	84		1.001	9.057	800
1535	249.020	249.213		0.16	0.17	1.32	1.11	0.26	98	97	84	2.06	1.6	105	0.016	96	98	19.1	0.56	1.13	15.4992094	88.40	161.89	156.34	73.22	161.61	208.00238	86	86	84		1.001	9.381	830
1536	249.182	249.378		0.16	0.16	1.32	1.10	0.26	98	97	84	2.06	1.6	107	0.014	103	105	18.6	0.48	1.05	15.4075804	88.70	162.17	156.63	73.20	161.91	221.31787	86	87	84		1.001	8.739	776
1537	249.344	249.543		0.16	0.17	1.31	1.10	0.26	98	97	84	2.07	1.6	110	0.016	97	98	18.2	0.42	1.17	15.4034472	88.90	162.39	156.79	73.19	162.09	231.4445	87	87	84		1.001	9.692	863

Elapsed Time	Particulate Sampling Data																	Fuel Weight, lb		Flow, gpm		Temperature Data, oF									Stack			
	Gas Meter Cubic Feet (1)	Gas Meter Cubic Feet (2)	Gas Meter Cubic Feet (amb)	Sample Rate, cfm (1)	Sample Rate, cfm (2)	Orifice dH (1)	Orifice dH (2)	Orifice dH (amb)	Meter oF (1)	Meter oF (2)	Meter oF (amb)	Meter Vac. In. Hg. (1)	Meter Vac. In. Hg. (2)	Dilution Tunnel Temp.	Dilution Tunnel dP	Pro. Rate (%) (1)	Pro. Rate (%) (2)	Scale Reading	Weight Change	Load Side Liquid Flow Rate	Boiler Side Liquid Flow Rate (optional)	Thermopile ΔT	Boiler to Heat Exch. Temp.	Heat Exch to Boiler Temp.	Inlet Load Temp.	Outlet Load Temp.	Stack	Filter (1)	Filter (2)	Ambient	Draft In. H2O	Specific Heat of Inlet Water (BTU/lb-°F)	Mass Flow Rate of Inlet Water (lb/min)	Heat Output, Btu
1538	249.506	249.708		0.16	0.16	1.32	1.11	0.26	98	97	84	2.06	1.6	112	0.014	103	105	17.7	0.56	1.07	15.44384	89.48	163.07	157.44	73.24	162.72	237.87645	87	87	84		1.001	8.929	800
1539	249.667	249.873		0.16	0.16	1.31	1.10	0.26	98	97	84	2.06	1.6	113	0.016	96	98	17.2	0.44	1.10	15.3938923	90.12	163.72	158.05	73.24	163.36	243.17732	87	88	84		1.001	9.167	827
1540	249.829	250.038		0.16	0.17	1.32	1.11	0.26	98	97	84	2.06	1.6	115	0.013	108	109	16.8	0.44	1.08	15.4723177	90.85	164.48	158.76	73.23	164.09	247.38985	87	88	84		1.001	9.008	819
1541	249.991	250.203		0.16	0.16	1.32	1.10	0.26	98	97	84	2.07	1.6	116	0.016	97	99	16.2	0.61	1.03	15.4102421	91.62	165.21	159.52	73.20	164.82	251.63796	88	88	84		1.001	8.568	786
1542	250.152	250.368		0.16	0.16	1.31	1.10	0.26	98	97	84	2.07	1.6	117	0.015	100	102	15.6	0.52	1.13	15.4868736	92.38	166.05	160.29	73.21	165.59	255.53795	88	89	84		1.001	9.377	867
1543	250.314	250.534		0.16	0.17	1.31	1.10	0.26	98	97	84	2.07	1.6	118	0.016	97	99	15.3	0.39	1.07	15.438756	93.46	167.07	161.23	73.19	166.66	258.38693	88	89	84		1.001	8.891	832
1544	250.475	250.698		0.16	0.16	1.31	1.10	0.26	98	97	84	2.08	1.6	119	0.015	100	102	14.5	0.79	1.07	15.4428616	94.41	167.97	162.04	73.15	167.56	260.75678	88	89	84		1.001	8.891	840
1545	250.637	250.863		0.16	0.16	1.31	1.10	0.26	98	97	84	2.08	1.6	119	0.015	100	102	14.0	0.50	1.07	15.4702692	95.18	168.80	162.83	73.24	168.41	262.49017	88	89	84		1.001	8.890	847
1546	250.798	251.027		0.16	0.16	1.31	1.10	0.26	98	97	84	2.08	1.6	120	0.015	100	102	13.5	0.49	1.05	15.4495373	96.23	169.88	163.92	73.16	169.39	264.36667	88	88	84		1.001	8.730	841
1547	250.960	251.192		0.16	0.17	1.31	1.10	0.26	98	97	84	2.07	1.6	120	0.016	97	99	12.8	0.72	1.03	15.4515963	97.16	170.88	164.82	73.29	170.45	266.17761	88	88	84		1.001	8.568	833
1548	251.121	251.356		0.16	0.16	1.31	1.10	0.26	98	97	84	2.07	1.6	121	0.015	100	102	12.3	0.46	1.05	15.4326153	98.23	171.96	165.72	73.31	171.54	267.86438	87	88	84		1.001	8.733	859
1549	251.282	251.521		0.16	0.16	1.31	1.10	0.26	98	97	84	2.08	1.6	122	0.016	97	99	11.9	0.38	1.10	15.4611359	99.20	172.99	166.67	73.29	172.50	269.35803	87	88	84		1.001	9.110	905
1550	251.443	251.686		0.16	0.17	1.31	1.10	0.26	98	97	84	2.09	1.6	122	0.015	100	102	11.2	0.71	1.11	15.4415207	100.17	173.95	167.55	73.30	173.47	270.84711	87	88	84		1.001	9.215	924
1551	251.605	251.851		0.16	0.16	1.31	1.10	0.26	98	97	84	2.09	1.6	123	0.014	104	106	10.7	0.51	1.06	15.4229364	101.15	174.89	168.47	73.28	174.44	272.43732	87	88	84		1.001	8.777	889
1552	251.766	252.015		0.16	0.16	1.31	1.09	0.26	98	97	84	2.09	1.6	123	0.016	97	99	10.0	0.68	1.09	15.4516554	102.25	176.05	169.55	73.32	175.57	273.87656	87	88	84		1.001	9.054	927
1553	251.927	252.179		0.16	0.16	1.31	1.09	0.26	98	97	84	2.08	1.6	124	0.016	97	99	9.6	0.43	1.13	15.4355555	103.23	176.96	170.52	73.31	176.54	275.33524	87	88	84		1.001	9.375	969
1554	252.088	252.343		0.16	0.16	1.30	1.10	0.26	98	97	84	2.09	1.6	124	0.015	100	102	8.9	0.69	1.50	15.4902353	104.24	178.05	168.39	73.28	177.52	276.79175	87	88	84		1.001	12.450	1299
1555	252.249	252.507		0.16	0.16	1.31	1.09	0.26	98	97	84	2.08	1.6	124	0.015	100	102	8.0	0.88	1.55	15.3984108	105.44	179.08	169.15	73.17	178.61	277.52188	87	88	84		1.001	12.932	1365
1556	252.410	252.671		0.16	0.16	1.31	1.09	0.26	98	97	84	2.08	1.6	124	0.013	108	110	7.8	0.24	1.40	15.4899158	106.52	179.98	171.06	73.03	179.56	278.1568	87	88	84		1.001	11.638	1241
1557	252.571	252.836		0.16	0.17	1.31	1.09	0.26	98	97	84	2.08	1.6	124	0.015	100	103	7.1	0.69	1.44	15.4413185	107.39	180.79	172.02	72.94	180.33	279.03601	87	88	84		1.001	11.962	1286
1558	252.732	253.000		0.16	0.16	1.31	1.09	0.26	98	97	84	2.1	1.6	125	0.014	104	106	6.5	0.64	1.34	15.3461695	108.24	181.63	172.80	72.92	181.16	280.48657	87	88	84		1.001	11.152	1208
1559	252.893	253.164		0.16	0.16	1.31	1.08	0.26	98	97	84	2.1	1.6	125	0.015	100	102	5.8	0.63	1.09	15.4033508	109.24	182.62	175.51	72.89	182.12	281.77374	87	88	84		1.001	9.053	990
1560	253.054	253.328		0.16	0.16	1.31	1.09	0.26	98	97	84	2.07	1.6	106	0.015	99	100	5.8	0.03	1.11	15.3751907	110.09	183.41	176.42	72.91	183.00	258.32373	87	87	84		1.001	9.213	1015
1561	253.215	253.493		0.16	0.16	1.30	1.09	0.26	98	97	84	2.09	1.6	100	0.015	98	100	5.5	0.32	1.07	15.4798651	110.56	183.89	176.91	72.96	183.52	242.04569	86	87	84		1.001	8.901	985
1562	253.377	253.658		0.16	0.16	1.30	1.09	0.26	98	97	84	2.09	1.6	97	0.014	102	104	5.5	-0.04	1.09	15.3938179	110.86	184.16	177.15	72.96	183.81	233.98496	86	86	84		1.001	9.066	1006
1563	253.538	253.822		0.16	0.16	1.29	1.09	0.26	98	97	84	2.08	1.6	95	0.015	98	99	5.2	0.29	1.11	15.3755531	111.08	184.33	177.40	72.94	184.02	227.22133	86	86	84		1.001	9.214	1025
1564	253.700	253.988		0.16	0.17	1.30	1.08	0.26	98	97	84	2.09	1.6	95	0.015	98	101	5.0	0.23	1.05	15.4898233	111.12	184.35	177.45	72.91	184.03	220.2271	86	86	84		1.001	8.759	974
1565	253.861	254.152		0.16	0.16	1.30	1.09	0.26	98	97	84	2.07	1.6	94	0.014	101	103	4.9	0.05	1.01	15.3557158	111.06	184.29	177.46	72.93	183.99	214.81149	86	86	84		1.001	8.407	935
1566	254.022	254.317		0.16	0.17	1.30	1.08	0.26	98	97	84	2.08	1.6	94	0.016	95	97	4.8	0.11	1.13	15.3846035	111.00	184.25	177.39	72.94	183.94	210.40706	86	86	84		1.001	9.375	1042
1567	254.184	254.481		0.16	0.16	1.30	1.08	0.26	98	97	84	2.08	1.6	93	0.014	102	103	4.8	0.05	1.05	15.4414377	110.94	184.21	177.31	72.94	183.88	207.08383	86	86	84		1.001	8.729	970
1568	254.345	254.646		0.16	0.16	1.30	1.08	0.26	98	97	84	2.08	1.6	93	0.014	101	103	4.7	0.06	1.09	15.4415417	110.86	184.12	177.17	72.96	183.83	203.6364	86	87	84		1.001	9.051	1005
1569	254.506	254.810		0.16	0.16	1.30	1.08	0.26	98	97	84	2.08	1.6	91	0.012	109	111	4.8	-0.05	1.15	15.3894463	110.72	184.03	177.07	73.02	183.74	202.73192	86	87	84		1.001	9.538	1057
1570	254.668	254.975		0.16	0.16	1.30	1.08	0.26	98	97	84	2.07	1.6	91	0.014	101	103	4.6	0.22	1.09	15.4799843	110.59	183.97	177.00	73.07	183.66	201.04428	86	86	84		1.001	9.050	1002
1571	254.829	255.140		0.16	0.16	1.30	1.08	0.26	98	97	84	2.07	1.6	90	0.015	97	100	4.6	-0.08	1.13	15.3938656	110.42	183.82	176.86	73.11	183.53	198.82549	86	87	84		1.001	9.372	1036
1572	254.990	255.305		0.16	0.17	1.30	1.08	0.26	98	97	84	2.08	1.6	90	0.015	97	100	4.6	0.03	1.11	15.3654213	110.24	183.69	176.77	73.17	183.41	196.44852	86	86	84		1.001	9.239	1020
1573	255.152	255.470		0.16	0.16	1.30	1.09	0.26	98	97	84	2.09	1.6	90	0.014	101	103	4.6	-0.02	1.06	15.5664549	110.11	183.60	176.69	73.18	183.29	193.93521	86	86	84		1.001	8.807	971
1574	255.313	255.634		0.16	0.16	1.30	1.08	0.26	98	97	84	2.09	1.6	90	0.014	101	102	4.4	0.23	1.09	15.4185419	109.95	183.45	176.53	73.21	183.16	191.60463	86	86	84		1.001	9.053	996
1575	255.474	255.799		0.16	0.17	1.30	1.08	0.26	98	97	84	2.07	1.6	90	0.013	105	107	4.6	-0.16	1.09	15.4858007	109.84	183.35	176.49	73.21	183.05	189.28638	86	86	84		1.001	9.054	996
1576	255.636	255.963		0.16	0.16	1.30	1.08	0.26	98	97	84	2.07	1.6	90	0.014	101	102	4.6	-0.01	1.07	15.5069408	109.75	183.19	176.32	73.16	182.90	187.00827	86	86	84		1.001	8.891	977
1577	255.797	256.128		0.16	0.16	1.30	1.09	0.26	98	97	84	2.09	1.6	90	0.014	101	103	4.5	0.05	1.15	15.5074348	109.53	183.05	176.21	73.24	182.77	184.77965	86	86	84		1.001	9.538	1046
1578	255.959	256.293		0.16	0.17	1.30	1.09	0.26	98	97	84	2.08	1.6	90	0.015	98	100	4.4	0.10	1.17	15.473073	109.40	182.96	176.16	73.26	182.66	182.61942	86	86	84		1.001	9.698	1062
1579	256.120	256.458		0.16	0.17	1.30	1.09	0.26	98	97	84	2.08	1.6	89	0.014	101	103	4.5	-0.05	1.13	15.3846235	109.24	182.79	175.94	73.27	182.50	180.60912	86	86	84		1.001	9.375	1025
1580	256.282	256.624		0.16	0.17	1.30	1.08	0.26	98	97	84	2.08	1.6	89	0.014	101	104	4.5	0.00	1.07	15.470294	109.14	182.69	175.89	73.28	182.42	178.59375	86	86	84		1.001	8.894	972
1581	256.443	256.788		0.16	0.16	1.30	1.08	0.26	98	97	84	2.07	1.6	89	0.015	97	99	4.6	-0.09	1.09	15.4894629	108.93	182.53	175.74	73.30	182.23	176.51645	86	86	84		1.001	9.052	987
1582	256.605	256.953		0.16	0.16	1.30	1.08	0.26	98	97	84	2.07	1.6	89	0.014	101	103	4.5	0.03	1.11	15.413476	108.78	182.37	175.61	73.30	182.08	174.73972	86	86	84		1.001	9.212	1003
1583	256.766	257.117		0.16	0.16	1.30	1.09	0.26	98	97	84	2.07	1.6	89	0.014	101	102	4.5	0.02	1.05	15.5469093	108.64	182.25	175.47	73.31	181.95	172.81349	86	86	84		1.001	8.739	950
1584	256.928	257.282		0.16	0.16	1.30	1.08	0.26	98	97	84	2.08	1.6	89	0.015	98	99	4.6	-0.14	1.11	15.5086718	108.49	182.06	175.34	73.29	181.78	171.10855	86	86	84		1.001	9.269	1007
1585	257.089	257.447		0.16	0.17	1.30	1.09	0.26	98	97	84	2.08	1.6	89	0.015	97	99	4.5	0.13	1.09	15.5085096	108.19	181.86	175.23	73.41	181.60	169.37474	86	86	84		1.001	9.054	981
1586	257.251	257.612		0.16	0.17	1.30	1.09	0.26	98	97	84	2.08	1.6	89	0.014	101	103	4.8	-0.27	1.09	15.4992561	108.06	181.68	175.03	73.34	181.41	167.61128	86	86	84		1.001	9.054	980
1587	257.412	257.777		0.16	0.16	1.30	1.08	0.26	98	97	84	2.07	1.6	89	0.016	94	96	4.5	0.29	1.07	15.3649845	107.85	181.52	174.89	73.39	181.24	165.93669	86	86	84		1.001	8.892	960
1588	257.574	257.942		0.16	0.17	1.30	1.09	0.26	98	97	84	2.09	1.6	89	0.014	101	103	4.6	-0.06	1.15	15.5565863	107.67	181.32	174.75	73.38	181.06	164.36041	86	86	84		1.001	9.536	1028
1589	257.735	258.107		0.16	0.17	1.30	1.08	0.26	98	97	83	2.09	1.6	89	0.013	104	107	4.5	0.02	1.07	15.3938818	107.51	181.16	174.61	73.37	180.88	162.83113	86	86	83		1.001	8.889	957
1590	257.897	258.272		0.16	0.16	1.30	1.08	0.26	98	97	84	2.09	1.6	89	0.015	98	99	4.5	-0.01	1.05	15.4225168	107.39	180.97	174.41	73.31	180.70	161.49124	86	86	84		1.001	8.729	938
1591	258.058	258.436		0.16	0.16	1.30	1.09	0.26	98	97	84	2.07	1.6	89	0.015	97	99	4.6	-0.08	1.07	15.4033079	107.17	180.78	174.27	73.35	180.52	160.11206	86	86	84		1.001	8.892	954
1592	258.220	258.601		0.16	0.17	1.30	1.09	0.26	98	97	84	2.09	1.6	89	0.015	98	99	4.7	-0.08	1.11	15.5087261	106.95	180.56	174.05	73.33	180.29	158.76543	86	86	84		1.001	9.212	986
1593	258.381	258.766		0.16	0.17	1.30	1.09	0.26	98	97	84	2.08	1.6	89	0.017	91	93	4.6	0.12	1.11	15.5182266	106.75	180.39	173.88	73.36	180.10	157.42452	86	86	84		1.001	9.213	985
1594	258.543	258.931		0.16	0.16	1.30	1.09	0.26	98	97	84	2.07	1.6	89	0.015	98	99	4.6	-0.03	1.09	15.4322004	106.58	180.22	173.78	73.37	179.95	156.21857	86	86	84		1.001	9.104	971
1595	258.704	259.096		0.16	0.17	1.30	1.08	0.26	98	97	84	2.07	1.6	88	0.016	94	96	4.7	-0.05	1.08	15.4416113	106.36	180.00	173.55	73.38	179.74	155.04173	86	86	84		1.001	9.011	960
1596	258.866	259.261		0.16	0.17	1.30	1.09	0.26	98	97	84	2.08	1.6	88	0.013	105	107	4.4	0.25	1.11	15.4777079	106.17	179.83	173.36	73.38	179.55	153.96669	86	86	84		1.001	9.218	980
1597	259.027	259.426		0.16	0.16	1.30	1.08	0.26	98	97	84	2.07	1.6	88	0.015	97	99	4.8	-0.42	1.01	15.5080366	105.97	179.62	173.19	73.38	179.35	152.90646	86	86	84		1.001	8.404	892
1598	259.189	259.591		0.16	0.17	1.30	1.08	0.26	98	97	84	2.07	1.6	88	0.015	98	99	4.8	0.09	1.05	15.4612398	105.77	179.42	173.00	73.37	179.14	151.83077	85	86	84		1.001	8.731	924
1599	259.350	259.755		0.16	0.16	1.30	1.09	0.26	98	97	84	2.09	1.6	88	0.015	97	99	4.7	0.07	1.03	15.4225845	105.66	179.23	172.79	73.29	178.95	150.80415	85	86	84		1.001	8.568	906

Elapsed Time	Particulate Sampling Data																		Fuel Weight, lb		Flow, gpm		Temperature Data, oF									Stack			
	Gas Meter Cubic Feet (1)	Gas Meter Cubic Feet (2)	Gas Meter Cubic Feet (amb)	Sample Rate, cfm (1)	Sample Rate, cfm (2)	Orifice dH (1)	Orifice dH (2)	Orifice dH (amb)	Meter oF (1)	Meter oF (2)	Meter oF (amb)	Meter Vac. In. Hg. (1)	Meter Vac. In. Hg. (2)	Dilution Tunnel Temp.	Dilution Tunnel dP	Pro. Rate (%) (1)	Pro. Rate (%) (2)	Scale Reading	Weight Change	Load Side Liquid Flow Rate	Boiler Side Liquid Flow Rate (optional)	Thermopile ΔT	Boiler to Heat Exch. Temp.	Heat Exch to Boiler Temp.	Inlet Load Temp.	Outlet Load Temp.	Stack	Filter (1)	Filter (2)	Ambient	Draft In. H2O	Specific Heat of Inlet Water (BTU/lb-°F)	Mass Flow Rate of Inlet Water (lb/min)	Heat Output, Btu
1600	259.512	259.920		0.16	0.17	1.30	1.09	0.26	98	97	84	2.08	1.6	88	0.014	101	103	4.7	-0.04	1.05	15.5087147	105.34	178.98	172.59	73.38	178.72	149.91704	85	86	84		1.001	8.732	921
1601	259.673	260.085		0.16	0.16	1.30	1.09	0.26	98	97	84	2.07	1.6	88	0.015	97	99	4.8	-0.06	1.07	15.4238529	105.12	178.78	172.35	73.38	178.50	149.10939	85	86	84		1.001	8.893	936
1602	259.835	260.250		0.16	0.17	1.30	1.09	0.26	98	97	84	2.08	1.6	88	0.014	101	103	4.6	0.14	1.05	15.4541388	104.96	178.59	172.17	73.37	178.33	148.13971	85	86	84		1.001	8.729	917
1603	259.996	260.415		0.16	0.17	1.30	1.08	0.26	98	97	84	2.08	1.6	88	0.012	109	111	4.8	-0.15	1.07	15.4702921	104.73	178.37	171.96	73.38	178.11	147.097	85	86	84		1.001	8.892	932
1604	260.158	260.580		0.16	0.16	1.30	1.09	0.26	98	97	84	2.09	1.6	88	0.015	98	99	4.8	0.03	1.09	15.46105	104.53	178.19	171.73	73.37	177.91	146.39838	85	85	84		1.001	9.033	945
1605	260.319	260.745		0.16	0.17	1.30	1.09	0.26	98	97	84	2.09	1.6	88	0.014	101	103	4.8	-0.05	1.10	15.5174084	104.37	178.00	171.56	73.36	177.73	145.56584	85	86	84		1.001	9.179	959
1606	260.481	260.910		0.16	0.17	1.30	1.08	0.26	98	97	84	2.07	1.6	88	0.015	98	99	4.8	0.02	1.09	15.3370829	104.08	177.74	171.33	73.38	177.46	144.60262	85	86	84		1.001	9.048	943
1607	260.642	261.074		0.16	0.16	1.30	1.09	0.26	98	97	84	2.08	1.6	88	0.014	101	102	4.7	0.04	1.07	15.451889	103.89	177.56	171.17	73.40	177.29	143.76131	85	85	84		1.001	8.895	925
1608	260.804	261.239		0.16	0.16	1.30	1.08	0.26	98	97	84	2.09	1.6	88	0.014	101	103	4.7	0.02	1.13	15.4033031	103.64	177.31	170.88	73.39	177.03	143.07004	85	85	84		1.001	9.379	973
1609	260.966	261.404		0.16	0.17	1.30	1.09	0.26	98	97	84	2.07	1.6	88	0.016	95	96	4.7	0.04	1.07	15.4414959	103.38	177.02	170.62	73.40	176.78	142.12921	85	85	84		1.001	8.895	921
1610	261.127	261.569		0.16	0.17	1.30	1.09	0.26	98	97	83	2.08	1.6	88	0.014	101	103	4.8	-0.13	1.17	15.403306	103.13	176.80	170.48	73.41	176.53	141.66768	85	85	83		1.001	9.703	1002
1611	261.289	261.735		0.16	0.17	1.30	1.09	0.26	98	97	83	2.08	1.6	88	0.014	101	103	4.8	0.00	1.03	15.5131111	102.97	176.61	170.42	73.38	176.35	140.81874	85	85	83		1.001	8.572	884
1612	261.450	261.900		0.16	0.16	1.30	1.09	0.26	98	97	83	2.09	1.6	88	0.013	104	107	4.8	-0.01	1.03	15.48983	102.75	176.39	170.32	73.40	176.15	140.04656	85	85	83		1.001	8.570	882
1613	261.612	262.065		0.16	0.17	1.30	1.09	0.26	98	97	83	2.07	1.6	88	0.014	101	103	4.7	0.09	1.09	15.3556633	102.48	176.25	169.94	73.49	175.97	139.49591	85	85	83		1.001	9.059	929
1614	261.773	262.230		0.16	0.17	1.30	1.08	0.26	98	97	83	2.09	1.6	88	0.014	101	103	4.8	-0.02	1.07	15.4994688	102.25	175.93	169.70	73.43	175.68	138.84757	85	85	83		1.001	8.888	910
1615	261.935	262.394		0.16	0.16	1.30	1.09	0.26	98	97	83	2.09	1.6	88	0.013	105	106	4.8	-0.06	1.12	15.5081987	102.01	175.70	169.46	73.43	175.44	138.27861	85	85	83		1.001	9.319	952
1616	262.096	262.559		0.16	0.17	1.30	1.09	0.26	98	97	83	2.09	1.6	88	0.014	101	103	4.9	-0.07	1.09	15.4515285	101.80	175.49	169.23	73.43	175.22	137.94028	85	85	83		1.001	9.054	923
1617	262.258	262.724		0.16	0.16	1.30	1.09	0.26	98	97	83	2.08	1.6	88	0.014	101	103	4.9	-0.03	1.11	15.4321461	101.61	175.30	169.04	73.43	175.03	137.29398	85	85	83		1.001	9.218	938
1618	262.419	262.889		0.16	0.17	1.30	1.09	0.26	98	97	83	2.07	1.6	88	0.013	104	107	4.9	-0.01	1.15	15.4518938	101.38	175.06	168.88	73.45	174.83	136.8584	85	85	83		1.001	9.544	969
1619	262.581	263.054		0.16	0.16	1.30	1.09	0.26	98	97	83	2.08	1.6	88	0.013	105	107	5.0	-0.03	1.09	15.4702578	101.12	174.83	168.63	73.46	174.58	135.81462	85	85	83		1.001	9.058	917
1620	262.743	263.220		0.16	0.17	1.30	1.09	0.26	98	97	83	2.07	1.6	88	0.014	101	103	5.0	-0.01	1.09	15.4900846	100.97	174.62	168.42	73.39	174.35	134.96625	85	85	83		1.001	9.060	916
1621	262.904	263.384		0.16	0.16	1.30	1.09	0.26	98	97	83	2.07	1.6	88	0.016	94	96	4.9	0.07	1.05	15.467432	100.75	174.34	168.15	73.34	174.09	134.49376	85	85	83		1.001	8.734	881
1622	263.066	263.549		0.16	0.16	1.30	1.08	0.26	98	97	83	2.07	1.6	88	0.014	101	103	4.9	-0.01	1.03	15.4704199	100.56	174.16	167.98	73.32	173.88	134.33778	85	85	83		1.001	8.572	863
1623	263.227	263.714		0.16	0.17	1.30	1.09	0.26	98	97	83	2.07	1.6	88	0.014	101	103	4.8	0.12	0.99	15.461174	100.37	173.91	167.76	73.28	173.65	133.72606	85	85	83		1.001	8.248	829
1624	263.389	263.879		0.16	0.17	1.30	1.09	0.26	98	97	83	2.07	1.6	88	0.015	98	99	5.1	-0.27	1.09	15.489336	100.23	173.68	167.55	73.19	173.42	133.20119	85	85	83		1.001	9.047	908
1625	263.550	264.043		0.16	0.16	1.30	1.09	0.26	98	97	83	2.08	1.6	88	0.014	101	102	5.0	0.09	1.14	15.461194	100.05	173.45	167.38	73.15	173.20	132.56659	85	85	83		1.001	9.497	951
1626	263.712	264.209		0.16	0.17	1.30	1.09	0.26	98	97	83	2.07	1.6	88	0.017	92	94	4.9	0.03	1.11	15.4779024	99.90	173.30	167.25	73.10	173.00	131.89764	85	85	83		1.001	9.220	922
1627	263.873	264.374		0.16	0.17	1.30	1.09	0.26	98	97	83	2.09	1.6	88	0.014	101	103	5.0	-0.09	1.09	15.537447	99.60	173.00	166.98	73.15	172.76	131.69913	85	85	83		1.001	9.057	903
1628	264.035	264.539		0.16	0.16	1.30	1.09	0.26	98	97	83	2.07	1.6	88	0.016	95	96	5.1	-0.11	1.07	15.461237	99.36	172.76	166.72	73.16	172.52	130.92705	85	85	83		1.001	8.896	885
1629	264.196	264.703		0.16	0.16	1.29	1.07	0.26	98	97	83	2.1	1.6	95	0.014	101	103	4.8	0.35	1.09	15.508462	99.16	172.57	166.56	73.17	172.33	154.3766	86	86	83		1.001	9.058	899
1630	264.358	264.868		0.16	0.17	1.31	1.08	0.26	98	97	83	2.08	1.6	90	0.014	101	103	4.9	-0.14	1.03	15.4899197	98.90	172.30	166.27	73.15	172.05	149.19994	85	85	83		1.001	8.574	849
1631	264.519	265.033		0.16	0.17	1.31	1.09	0.26	98	97	83	2.06	1.6	88	0.015	97	99	4.8	0.12	1.01	15.3465662	98.68	172.08	166.14	73.15	171.83	143.73845	85	85	83		1.001	8.411	831
1632	264.681	265.198		0.16	0.16	1.30	1.09	0.26	98	97	83	2.08	1.6	88	0.013	105	107	4.9	-0.12	1.07	15.4855824	98.47	171.90	166.00	73.16	171.64	140.16643	85	85	83		1.001	8.899	877
1633	264.842	265.363		0.16	0.17	1.31	1.09	0.26	98	97	83	2.08	1.6	88	0.015	97	99	4.9	0.00	1.11	15.5469055	98.20	171.67	165.80	73.21	171.42	137.45389	85	85	83		1.001	9.224	907
1634	265.004	265.528		0.16	0.17	1.31	1.09	0.26	98	97	83	2.08	1.6	88	0.014	101	103	4.8	0.12	1.05	15.4791393	98.04	171.51	165.84	73.24	171.28	135.57732	85	85	83		1.001	8.734	857
1635	265.166	265.693		0.16	0.16	1.30	1.09	0.26	98	97	83	2.08	1.6	87	0.014	101	103	4.8	0.01	1.13	15.4902468	97.76	171.24	165.36	73.28	171.04	134.06671	85	85	83		1.001	9.419	922
1636	265.327	265.859		0.16	0.17	1.30	1.09	0.26	98	97	83	2.07	1.6	88	0.014	101	103	4.8	0.00	1.09	15.4416809	97.50	171.03	165.18	73.31	170.81	132.97038	85	85	83		1.001	9.039	882
1637	265.489	266.024		0.16	0.17	1.31	1.09	0.26	98	97	83	2.07	1.6	87	0.013	105	107	4.9	-0.08	1.13	15.4228239	97.20	170.76	164.95	73.35	170.55	131.85036	85	85	83		1.001	9.384	913
1638	265.651	266.189		0.16	0.17	1.30	1.09	0.26	98	97	83	2.08	1.6	87	0.014	101	103	4.7	0.21	1.11	15.4132147	96.98	170.59	164.81	73.38	170.37	131.09488	85	85	83		1.001	9.221	895
1639	265.812	266.354		0.16	0.16	1.31	1.09	0.26	98	97	83	2.08	1.6	87	0.014	100	103	4.8	-0.13	1.11	15.3563356	96.65	170.31	164.51	73.42	170.07	129.99478	85	85	83		1.001	9.219	892
1640	265.974	266.518		0.16	0.16	1.30	1.09	0.26	98	97	83	2.08	1.6	87	0.015	98	99	4.9	-0.14	1.09	15.5372715	96.39	170.05	164.28	73.43	169.82	129.42236	85	85	83		1.001	9.062	874
1641	266.136	266.684		0.16	0.17	1.31	1.09	0.26	98	97	83	2.07	1.6	87	0.016	95	97	4.8	0.10	1.17	15.5057373	96.31	169.91	164.12	73.40	169.70	128.55167	85	85	83		1.001	9.704	936
1642	266.297	266.849		0.16	0.16	1.30	1.09	0.26	97	97	83	2.08	1.6	87	0.015	97	99	4.8	0.04	1.11	15.460825	95.93	169.64	163.79	73.45	169.38	128.42755	85	85	83		1.001	9.222	886
1643	266.459	267.014		0.16	0.17	1.31	1.09	0.26	97	97	83	2.06	1.6	87	0.013	105	107	5.0	-0.20	1.11	15.4778318	95.72	169.40	163.58	73.44	169.16	127.75242	85	85	83		1.001	9.222	884
1644	266.621	267.179		0.16	0.16	1.31	1.09	0.26	97	97	83	2.08	1.6	87	0.014	101	103	4.8	0.21	1.13	15.4304514	95.62	169.31	163.49	73.43	169.04	127.66589	85	85	83		1.001	9.382	898
1645	266.782	267.345		0.16	0.17	1.30	1.09	0.26	98	97	83	2.07	1.6	87	0.014	100	103	4.9	-0.15	1.12	15.4229612	95.48	169.02	163.24	73.30	168.78	127.38011	85	85	83		1.001	9.291	888
1646	266.944	267.510		0.16	0.16	1.31	1.09	0.26	98	97	83	2.08	1.6	87	0.016	95	96	4.8	0.14	1.06	15.4986029	95.27	168.77	163.01	73.28	168.55	126.68529	85	85	83		1.001	8.852	844
1647	267.106	267.675		0.16	0.17	1.30	1.09	0.26	98	96	83	2.07	1.6	87	0.014	101	103	4.9	-0.10	1.07	15.5352907	95.12	168.56	162.79	73.21	168.33	126.20074	85	85	83		1.001	8.899	847
1648	267.267	267.840		0.16	0.16	1.31	1.09	0.26	97	97	83	2.07	1.6	87	0.017	91	93	4.9	-0.05	1.05	15.4898119	94.85	168.34	162.57	73.23	168.08	125.82677	85	85	83		1.001	8.740	830
1649	267.429	268.005		0.16	0.17	1.31	1.09	0.26	97	97	83	2.08	1.6	87	0.015	98	99	4.9	0.02	1.05	15.5179024	94.64	168.09	162.35	73.21	167.85	125.37531	85	85	83		1.001	8.737	828
1650	267.591	268.170		0.16	0.17	1.31	1.09	0.26	97	96	83	2.08	1.6	87	0.015	98	99	4.8	0.08	1.15	15.5468779	94.38	167.84	162.03	73.21	167.60	124.72672	85	85	83		1.001	9.543	902
1651	267.753	268.335		0.16	0.16	1.31	1.09	0.26	97	97	83	2.07	1.6	87	0.014	101	103	4.9	-0.06	1.05	15.366271	94.23	167.61	161.82	73.15	167.38	124.02307	84	85	83		1.001	8.738	824
1652	267.914	268.501		0.16	0.17	1.31	1.09	0.26	97	96	83	2.07	1.6	87	0.015	97	100	5.0	-0.05	1.07	15.441555	93.99	167.41	161.62	73.18	167.17	123.81531	84	85	83		1.001	8.898	837
1653	268.076	268.666		0.16	0.17	1.30	1.09	0.26	97	97	83	2.07	1.6	87	0.015	98	99	4.9	0.01	1.07	15.5049105	93.74	167.14	161.40	73.14	166.88	123.6068	84	85	83		1.001	8.900	835
1654	268.238	268.832		0.16	0.17	1.30	1.09	0.26	97	96	83	2.08	1.6	87	0.013	105	107	5.0	-0.08	1.05	15.4213295	93.57	166.95	161.22	73.17	166.74	123.38256	84	85	83		1.001	8.742	819
1655	268.400	268.997		0.16	0.17	1.30	1.09	0.26	97	96	83	2.08	1.6	87	0.014	101	103	4.8	0.26	1.05	15.3891582	93.30	166.68	161.04	73.17	166.46	123.3312	84	85	83		1.001	8.756	818
1656	268.562	269.162		0.16	0.16	1.31	1.09	0.26	97	96	83	2.08	1.6	87	0.015	98	99	5.0	-0.25	1.11	15.4032631	93.07	166.47	160.80	73.16	166.24	122.70669	84	85	83		1.001	9.207	858
1657	268.723	269.327		0.16	0.17	1.31	1.09	0.26	97	96	83	2.08	1.6	87	0.014	101	103	4.9	0.10	1.03	15.4625959	92.82	166.26	160.58	73.20	166.02	122.27242	84	85	83		1.001	8.567	796
1658	268.885	269.492		0.16	0.17	1.30	1.09	0.26	97	96	83	2.07	1.6	87	0.014	101	103	4.8	0.10	1.11	15.470335	92.56	166.00	160.38	73.23	165.79	122.2828	84	85	83		1.001	9.223	855
1659	269.047	269.657		0.16	0.16	1.30	1.09	0.26	97	96	83	2.07	1.6	87	0.014	101	103	4.9	-0.08	1.07	15.4689035	92.33	165.80	160.14	73.24	165.57	121.59329	84	85	83		1.001	8.903	823
1660	269.208	269.822		0.16	0.17	1.30	1.09	0.26	97	96	83	2.08	1.6	93	0.017	92	94	5.0	-0.06	0.97	15.4333763	92.12	165.58	160.15	73.24	165.36	144.77487	85	85	83		1.001	8.092	746
1661	269.370	269.987		0.16	0.17	1.31	1.09	0.26	97	96	83	2.06	1.6	88	0.014	101	103	5.0	0.00	0.99	15.4721146	91.80	165.28	160.04	73.27	165.08	138.21886	84	85	83		1.001	8.256	759

Elapsed Time	Particulate Sampling Data																	Fuel Weight, lb		Flow, gpm		Temperature Data, oF									Stack			
	Gas Meter Cubic Feet (1)	Gas Meter Cubic Feet (2)	Gas Meter Cubic Feet (amb)	Sample Rate, cfm (1)	Sample Rate, cfm (2)	Orifice dH (1)	Orifice dH (2)	Orifice dH (amb)	Meter oF (1)	Meter oF (2)	Meter oF (amb)	Meter Vac. In. Hg. (1)	Meter Vac. In. Hg. (2)	Dilution Tunnel Temp.	Dilution Tunnel dP	Pro. Rate (%) (1)	Pro. Rate (%) (2)	Scale Reading	Weight Change	Load Side Liquid Flow Rate	Boiler Side Liquid Flow Rate (optional)	Thermopile ΔT	Boiler to Heat Exch. Temp.	Heat Exch to Boiler Temp.	Inlet Load Temp.	Outlet Load Temp.	Stack	Filter (1)	Filter (2)	Ambient	Draft In. H2O	Specific Heat of Inlet Water (BTU/lb-°F)	Mass Flow Rate of Inlet Water (lb/min)	Heat Output, Btu
1662	269.532	270.152		0.16	0.16	1.30	1.09	0.26	97	96	83	2.07	1.6	87	0.014	101	103	4.9	0.03	1.09	15.4517727	91.57	165.09	159.54	73.31	164.88	133.34926	84	85	83		1.001	9.065	831
1663	269.693	270.318		0.16	0.17	1.30	1.09	0.26	97	96	83	2.07	1.6	87	0.016	94	97	4.9	0.06	1.05	15.4612236	91.33	164.87	159.35	73.32	164.65	130.24782	84	85	83		1.001	8.738	799
1664	269.855	270.483		0.16	0.17	1.30	1.09	0.26	97	96	83	2.07	1.6	87	0.014	101	103	4.8	0.04	1.05	15.4518604	91.11	164.68	159.14	73.34	164.45	128.17319	84	85	83		1.001	8.736	797
1665	270.017	270.648		0.16	0.17	1.30	1.09	0.26	97	96	83	2.07	1.6	87	0.015	98	99	5.0	-0.18	1.09	15.4661093	90.93	164.50	159.02	73.35	164.28	126.44226	84	84	83		1.001	9.038	823
1666	270.179	270.813		0.16	0.16	1.30	1.09	0.26	97	96	83	2.08	1.6	87	0.015	98	99	5.0	0.06	1.09	15.4648972	90.64	164.22	158.72	73.35	163.98	125.75956	84	84	83		1.001	9.050	821
1667	270.340	270.978		0.16	0.17	1.30	1.09	0.26	97	96	83	2.08	1.6	87	0.013	104	107	5.0	-0.06	1.08	15.4032497	90.40	163.97	158.53	73.35	163.75	124.5771	84	84	83		1.001	9.016	816
1668	270.502	271.143		0.16	0.16	1.30	1.09	0.26	97	96	83	2.06	1.6	87	0.014	101	103	5.0	0.04	1.14	15.4923048	90.26	163.82	158.36	73.33	163.59	123.41734	84	84	83		1.001	9.447	854
1669	270.664	271.308		0.16	0.17	1.30	1.09	0.26	97	96	83	2.07	1.6	87	0.014	101	103	4.9	0.05	1.11	15.4703283	90.06	163.56	158.10	73.26	163.32	123.1872	84	84	83		1.001	9.222	832
1670	270.826	271.474		0.16	0.17	1.30	1.09	0.26	97	96	83	2.07	1.6	87	0.016	95	97	4.9	0.03	1.13	15.4226656	89.87	163.31	157.83	73.22	163.08	122.75127	84	84	83		1.001	9.389	845
1671	270.987	271.639		0.16	0.17	1.30	1.09	0.26	97	96	83	2.06	1.6	87	0.014	101	103	5.0	-0.12	1.05	15.4229431	89.85	163.14	157.65	73.08	162.93	121.98885	84	84	83		1.001	8.743	786
1672	271.149	271.805		0.16	0.17	1.30	1.09	0.26	97	96	83	2.08	1.6	87	0.014	101	104	5.0	0.05	1.07	15.4322567	89.73	162.88	157.43	72.93	162.66	121.78821	84	84	83		1.001	8.903	800
1673	271.311	271.970		0.16	0.17	1.30	1.09	0.26	97	96	83	2.07	1.6	87	0.014	101	103	4.9	0.03	1.05	15.4518785	89.57	162.69	157.23	72.89	162.46	120.97714	84	84	83		1.001	8.742	784
1674	271.473	272.135		0.16	0.16	1.31	1.09	0.26	97	96	83	2.06	1.6	87	0.016	95	96	4.9	0.00	1.03	15.4322996	89.42	162.43	157.02	72.82	162.24	119.99368	84	84	83		1.001	8.583	768
1675	271.635	272.300		0.16	0.17	1.30	1.09	0.26	97	96	82	2.07	1.6	87	0.015	98	99	5.0	-0.06	1.05	15.4224424	89.26	162.27	156.91	72.81	162.07	119.7609	84	84	82		1.001	8.742	781
1676	271.796	272.465		0.16	0.16	1.30	1.09	0.26	97	96	82	2.08	1.6	92	0.016	95	97	5.0	-0.01	1.11	15.4309254	89.09	162.10	156.69	72.76	161.85	140.20494	84	85	82		1.001	9.227	823
1677	271.958	272.630		0.16	0.17	1.30	1.09	0.26	97	96	82	2.08	1.6	95	0.015	99	100	4.7	0.33	1.07	15.4132185	88.78	161.85	156.42	72.84	161.62	160.24239	84	85	82		1.001	8.900	791
1678	272.119	272.795		0.16	0.17	1.30	1.10	0.26	97	96	82	2.08	1.6	97	0.017	92	94	4.2	0.46	1.07	15.4628506	88.49	161.57	156.13	72.87	161.36	175.75041	85	85	82		1.001	8.876	786
1679	272.281	272.960		0.16	0.16	1.31	1.10	0.26	97	96	82	2.08	1.6	100	0.015	99	101	3.6	0.63	1.07	15.4412212	88.44	161.57	156.10	72.86	161.30	191.39714	85	85	82		1.001	8.901	788
1680	272.442	273.125		0.16	0.17	1.31	1.10	0.26	97	96	82	2.08	1.6	103	0.014	102	104	3.2	0.36	1.09	15.4612961	88.58	161.76	156.18	72.87	161.45	206.36588	85	85	82		1.001	9.064	804
1681	272.603	273.291		0.16	0.17	1.31	1.10	0.26	97	96	82	2.09	1.6	106	0.014	102	105	2.9	0.35	1.01	15.4615078	88.94	162.13	156.51	72.86	161.80	216.92311	85	86	82		1.001	8.418	750
1682	272.765	273.455		0.16	0.16	1.31	1.10	0.26	97	96	83	2.08	1.6	109	0.017	94	95	2.4	0.49	1.15	15.4701271	89.19	162.44	156.83	72.92	162.11	225.21939	86	86	83		1.001	9.545	852
1683	272.926	273.620		0.16	0.17	1.30	1.09	0.26	97	96	83	2.1	1.6	110	0.013	107	109	1.8	0.56	1.07	15.4897757	89.58	162.87	157.19	72.94	162.52	231.4707	86	86	83		1.001	8.896	798
1684	273.087	273.784		0.16	0.16	1.31	1.10	0.26	97	96	82	2.1	1.6	111	0.015	99	101	1.5	0.30	1.11	15.4399929	90.08	163.47	157.77	73.04	163.12	235.67096	86	87	82		1.001	9.219	831
1685	273.248	273.949		0.16	0.17	1.31	1.10	0.26	97	96	82	2.1	1.6	112	0.016	96	98	0.9	0.59	1.11	15.4643879	90.57	164.07	158.37	73.14	163.72	239.20276	87	87	82		1.001	9.220	836
1686	273.409	274.113		0.16	0.16	1.31	1.09	0.26	97	96	83	2.09	1.6	113	0.016	96	98	0.7	0.21	1.10	15.4702177	91.13	164.68	158.95	73.20	164.33	241.55585	87	87	83		1.001	9.152	835
1687	273.570	274.278	379.133	0.16	0.17	1.31	1.09	0.26	97	96	83	2.09	1.6	114	0.013	107	109	0.0	0.70	1.08	15.4524736	91.88	165.56	159.79	73.25	165.13	244.37929	87	88	83		1.001	8.994	827
	273.570	274.278	379.133			1.32	1.06	0.26	95	95	82			92	0.015					1.07	15.43	101.3	174.0	167.9	72.4	173.7		82.87	83.17		#DIV/0!			904
																																	TOTAL:	1525321

TF_{avg}	162.673
TI_{avg}	163.910

OMNI-Test Laboratories, Inc.

Manufacturer:	Central Boiler	**Technicians:**	B. Davis
Model:	Edge 760		
Date:	08/13/19		
Run:	3		
Control #:	0117WB039E		
Test Duration:	1687		
Output Category:	II		

Test Results in Accordance with CSA B415.1-09

	HHV Basis	LHV Basis
Overall Efficiency	70.9%	76.4%
Combustion Efficiency	89.3%	89.3%
Heat Transfer Efficiency	79%	85.6%

Output Rate (kJ/h)	50,249	47,667	**(Btu/h)**
Burn Rate (kg/h)	3.56	7.85	**(lb/h)**
Input (kJ/h)	70,850	67,208	**(Btu/h)**

Test Load Weight (dry kg)	100.17	220.77	**dry lb**
MC wet (%)	17.89819376		
MC dry (%)	21.80		
Particulate (g)	61.84		
CO (g)	12,201		
Test Duration (h)	28.12		

Emissions	Particulate	CO
g/MJ Output	N/A	8.64
g/kg Dry Fuel	N/A	121.80
g/h	N/A	433.94
lb/MM Btu Output	N/A	20.07

Air/Fuel Ratio (A/F)	17.26

VERSION: **2.3** **3/23/2010**

VERSION:	2.3	3/23/2010			
Manufacturer:	Central Boiler		Appliance Type:	Non-Cat	
Model:	Edge 760				
Date:	8/13/2019		Temp. Units	F	(F or C)
Run:	3		Weight Units	lb	(kg or lb)
Control #:	0117WB039E				
Test Duration:	1687				
Output Category:	II		Fuel Data		
				Oak	
Wood Moisture (% wet):	17.90		HHV	19,887	kJ/kg
Load Weight (lb wet):	268.90		%C	50	
Burn Rate (dry kg/h):	3.56		%H	6.6	
Total Particulate Emissions:	61.84	g	%O	43.2	
			%Ash	0.2	

	Averages	0.61	5.71	#DIV/0!	168.16	81.73
					Temp. (ºF)	
Elapsed Time (min)	Fuel Weight Remaining (lb)	Flue Gas Composition (%) CO	CO_2	O_2	Flue Gas	Room Temp
0	268.90	0.14	15.42		232.5	84.0
1	267.90	0.61	4.13		216.6	84.0
2	266.70	0.28	4.46		206.3	84.0
3	265.35	0.18	5.12		220.1	84.0
4	263.99	5.20	17.02		243.1	84.0
5	262.64	3.33	18.60		253.3	84.0
6	261.99	0.50	19.85		253.3	84.0
7	261.18	0.11	18.26		253.1	84.0
8	260.03	0.11	17.42		258.2	84.0
9	259.05	0.12	18.31		257.0	84.0
10	258.37	0.11	17.49		257.9	84.0
11	257.62	0.12	17.69		259.6	84.0
12	256.68	0.10	17.31		258.5	84.0
13	255.59	0.10	16.83		261.8	84.0
14	254.85	0.08	17.05		260.6	84.0
15	254.40	0.10	16.90		263.0	84.0
16	253.07	0.07	16.55		265.6	84.0
17	252.37	0.06	16.57		266.5	84.0
18	251.78	0.07	16.72		267.3	84.0
19	251.00	0.07	16.72		266.8	84.0
20	249.80	0.08	16.72		268.6	84.0
21	249.38	0.07	16.49		253.4	84.0

22	249.09	0.15	16.98		236.5	84.0
23	248.98	0.08	13.19		227.6	84.0
24	248.86	0.35	11.15		221.4	84.0
25	248.79	0.50	11.76		214.3	84.0
26	248.65	0.16	7.86		208.5	84.0
27	248.70	0.04	5.45		204.1	84.0
28	248.71	0.04	4.41		200.6	84.0
29	248.65	0.05	3.61		197.6	84.0
30	248.61	0.06	3.13		196.3	84.0
31	248.56	0.05	2.66		195.4	84.0
32	248.62	0.08	1.90		193.6	84.0
33	248.66	0.18	1.87		191.6	85.0
34	248.73	0.26	2.05		189.3	85.0
35	248.59	0.31	2.21		186.9	84.0
36	248.66	0.35	2.27		184.6	84.0
37	248.64	0.36	2.31		182.3	85.0
38	248.58	0.35	2.33		180.1	84.0
39	248.54	0.35	2.25		178.0	84.0
40	248.74	0.34	2.19		175.8	84.0
41	248.77	0.33	2.09		173.9	85.0
42	248.67	0.32	1.99		172.0	85.0
43	248.61	0.31	1.89		170.2	85.0
44	248.63	0.29	1.80		168.5	85.0
45	248.62	0.28	1.72		166.8	85.0
46	248.82	0.27	1.65		165.1	85.0
47	248.59	0.26	1.59		163.6	85.0
48	248.61	0.26	1.54		162.0	85.0
49	248.56	0.25	1.49		160.68	85
50	248.53	0.24	1.44		159.333	85
51	248.78	0.24	1.41		158.035	85
52	248.66	0.24	1.36		156.773	85
53	248.82	0.24	1.34		155.554	85
54	248.78	0.23	1.31		154.438	85
55	248.54	0.23	1.28		153.341	85
56	248.70	0.23	1.26		152.261	85
57	248.74	0.23	1.23		151.318	85
58	248.71	0.23	1.22		150.305	85
59	248.68	0.23	1.21		149.481	85
60	248.72	0.22	1.19		148.496	85
61	248.74	0.22	1.17		147.614	85
62	248.77	0.22	1.15		146.797	85
63	248.68	0.22	1.13		145.82	85

64	248.76	0.22	1.12		145.178	85
65	248.78	0.22	1.11		144.233	85
66	248.73	0.22	1.1		143.407	85
67	248.72	0.22	1.1		142.93	85
68	248.77	0.22	1.1		142.119	85
69	248.66	0.22	1.1		141.557	85
70	248.75	0.22	1.08		140.843	85
71	248.82	0.22	1.08		140.176	85
72	248.83	0.22	1.08		139.531	85
73	248.78	0.22	1.08		139.229	85
74	248.73	0.23	1.1		138.349	85
75	248.74	0.23	1.11		137.787	85
76	248.78	0.23	1.1		137.412	85
77	248.80	0.23	1.11		136.972	85
78	248.71	0.23	1.11		136.197	85
79	248.64	0.23	1.11		135.724	85
80	248.81	0.23	1.11		134.948	85
81	248.87	0.23	1.11		134.582	85
82	248.89	0.24	1.12		134.199	85
83	248.75	0.24	1.11		133.907	85
84	248.92	0.24	1.12		133.618	85
85	248.99	0.24	1.13		133.006	85
86	248.83	0.24	1.13		132.082	85
87	248.72	0.24	1.14		131.972	85
88	248.82	0.24	1.14		131.407	85
89	248.85	0.24	1.15		130.77	85
90	248.66	0.24	1.13		146.595	85
91	248.58	2.07	8.73		153.598	85
92	248.52	1.87	9.42		145.987	85
93	248.53	1.28	6.91		141.124	85
94	248.61	1.08	5.9		138.148	85
95	248.53	0.97	5.4		135.892	85
96	248.68	0.89	5.03		134.264	85
97	248.51	0.84	4.75		133.224	85
98	248.56	0.77	4.41		132.465	85
99	248.64	0.71	4.07		131.67	85
100	248.57	0.64	3.73		131.255	85
101	248.47	0.6	3.44		130.218	85
102	248.40	0.54	3.17		129.678	85
103	248.49	0.5	2.92		128.724	85
104	248.58	0.47	2.73		128.828	85
105	248.60	0.44	2.55		128.575	85

106	248.57	0.41	2.38		127.965	85
107	248.57	0.38	2.21		127.503	85
108	248.50	0.36	2.08		126.888	85
109	248.53	0.33	1.96		126.524	85
110	248.59	0.31	1.85		126.007	85
111	248.58	0.3	1.76		126.021	85
112	248.43	0.28	1.66		125.343	85
113	248.64	0.26	1.57		124.78	85
114	248.48	0.25	1.5		125.053	85
115	248.50	0.24	1.42		124.668	85
116	248.58	0.22	1.36		124.43	85
117	248.52	0.21	1.3		124.32	85
118	248.55	0.2	1.24		124.005	85
119	248.59	0.2	1.2		123.874	85
120	248.59	0.19	1.14		123.49	85
121	248.42	0.18	1.1		141.425	85
122	248.22	1.67	7.84		144.532	85
123	248.33	1.84	8.68		138.242	85
124	248.38	1.29	6.36		134.155	85
125	248.24	1.06	5.14		131.02	85
126	248.36	0.93	4.51		129.194	85
127	248.28	0.86	4.2		127.435	85
128	248.25	0.81	4.02		126.58	85
129	248.26	0.74	3.75		125.772	85
130	248.29	0.69	3.5		124.595	85
131	248.31	0.63	3.24		124.132	85
132	248.25	0.58	3.01		123.202	85
133	248.30	0.53	2.8		122.994	85
134	248.37	0.49	2.59		122.351	85
135	248.27	0.45	2.44		122.122	85
136	248.25	0.41	2.26		121.685	85
137	248.17	0.39	2.13		121.737	85
138	247.78	0.62	2.5		153.03	85
139	247.38	2.93	11.07		173.43	85
140	246.25	4.43	15.53		193.704	85
141	245.50	0.53	18.47		217.216	85
142	244.63	0.1	18.01		233.187	85
143	243.90	0.07	17.83		242.833	85
144	242.79	0.07	17.79		249.96	85
145	242.02	0.08	17.7		254.699	85
146	241.20	0.08	17.81		256.605	85
147	240.24	0.08	17		259.856	85

148	239.12	0.11	17.41		262.54	85
149	238.20	0.09	16.25		263.176	85
150	237.84	0.12	16.94		266.177	85
151	236.70	0.13	17.02		266.215	85
152	235.76	0.13	16.62		269.007	85
153	234.89	0.14	16.65		271.134	85
154	234.20	0.14	16.82		270.412	85
155	233.06	0.13	16.45		273.098	85
156	232.26	0.13	16.38		275.053	85
157	231.45	0.14	16.31		276.242	85
158	230.57	0.14	16.3		273.329	85
159	229.84	0.14	15.75		275.522	85
160	228.81	0.14	16.06		277.379	85
161	227.81	0.13	16.18		277.241	85
162	227.10	0.13	16.01		275.121	85
163	226.08	0.14	15.72		277.979	84
164	225.48	0.12	15.53		278.205	85
165	224.64	0.13	15.71		280.654	85
166	223.91	0.12	15.99		269.814	85
167	223.42	0.47	15.94		248.999	85
168	222.96	2.02	16.69		237.763	85
169	222.88	2.61	14.6		231.49	85
170	222.67	5	14.08		223.197	85
171	222.60	1.72	12.14		215.198	85
172	222.39	0.24	9.7		209.738	85
173	222.31	0.14	8.5		205.831	85
174	222.18	0.13	7.4		202.658	85
175	222.26	0.15	7.07		200.656	85
176	222.09	0.13	5.87		199.616	85
177	222.09	0.52	5.34		197.82	85
178	222.04	1.25	7.03		195.603	85
179	221.86	1.78	7.84		193.209	85
180	221.92	2.01	8.01		190.858	85
181	221.93	2.13	8.01		188.38	85
182	221.86	2.11	7.77		186.082	85
183	221.93	2.05	7.5		183.882	85
184	221.76	2.01	7.31		181.798	84
185	221.70	1.89	6.94		179.736	85
186	221.85	1.77	6.56		177.834	85
187	221.77	1.68	6.25		176.039	85
188	221.75	1.55	5.93		174.289	85
189	221.82	1.46	5.66		172.575	85

190	221.78	1.33	5.28		170.882	85
191	221.88	1.24	4.95		169.223	85
192	221.65	1.15	4.68		167.629	85
193	221.69	1.11	4.53		166.116	85
194	221.65	1.03	4.29		164.623	85
195	221.85	0.98	4.09		163.266	85
196	221.66	0.93	3.94		161.938	85
197	221.80	0.87	3.72		160.614	85
198	221.55	0.83	3.55		159.385	85
199	221.83	0.78	3.4		158.041	85
200	221.75	0.72	3.18		156.84	85
201	221.72	0.67	2.98		155.612	85
202	221.86	0.65	2.88		154.439	85
203	221.65	0.62	2.78		153.282	85
204	221.87	0.59	2.69		152.183	85
205	221.81	0.57	2.61		151.121	85
206	221.92	0.55	2.55		150.17	85
207	221.78	0.53	2.48		149.283	85
208	221.77	0.52	2.44		148.5	85
209	221.72	0.51	2.41		147.654	85
210	221.84	0.5	2.37		146.986	85
211	221.92	0.48	2.33		146.282	85
212	221.86	0.47	2.29		145.427	85
213	221.85	0.46	2.25		144.535	85
214	221.80	0.46	2.24		143.967	85
215	221.74	0.45	2.23		143.215	85
216	221.89	0.44	2.22		142.532	85
217	221.92	0.44	2.21		141.681	85
218	221.91	0.43	2.21		141.102	85
219	221.82	0.43	2.22		140.526	85
220	221.86	0.42	2.2		140.033	85
221	221.94	0.42	2.18		139.614	85
222	221.88	0.42	2.2		139.168	85
223	221.87	0.41	2.17		138.792	85
224	221.96	0.41	2.16		138.192	85
225	221.88	0.4	2.14		137.508	85
226	221.76	0.4	2.13		136.799	85
227	222.00	0.4	2.13		136.605	85
228	221.89	0.4	2.14		135.943	85
229	221.86	0.39	2.09		135.653	85
230	221.95	0.39	2.11		135.094	85
231	221.83	0.39	2.1		134.886	85

232	221.87	0.38	2.09		134.467	85
233	221.97	0.37	2.07		133.925	85
234	221.90	0.37	2.04		133.458	85
235	221.85	0.36	2.02		138.383	85
236	221.61	1.64	7.15		157.803	85
237	221.45	0.57	4.39		150.925	85
238	221.45	0.45	3.36		145.869	85
239	221.40	0.45	3.25		142.282	85
240	221.46	0.43	3.11		139.736	85
241	221.32	0.39	2.83		137.705	85
242	221.40	0.35	2.53		135.983	85
243	221.52	0.3	2.24		134.752	85
244	221.49	0.27	1.98		133.675	85
245	221.34	0.24	1.77		132.666	85
246	221.48	0.21	1.6		131.806	85
247	221.41	0.2	1.46		131.057	84
248	221.43	0.18	1.35		130.787	84
249	221.55	0.17	1.24		130.188	85
250	221.63	0.15	1.15		129.764	84
251	221.63	0.14	1.09		129.251	84
252	221.51	0.13	1.03		128.99	84
253	221.57	0.13	0.99		128.338	84
254	221.45	0.12	0.96		127.787	85
255	221.53	0.12	0.92		127.185	84
256	221.64	0.12	0.9		126.652	85
257	221.42	0.11	0.89		126.409	85
258	221.50	0.11	0.87		126.079	85
259	221.52	0.11	0.87		126.134	85
260	221.56	0.11	0.86		125.838	85
261	221.58	0.1	0.85		124.76	84
262	221.56	0.1	0.84		124.472	84
263	221.54	0.1	0.84		124.424	85
264	221.56	0.1	0.84		124.092	85
265	221.60	0.1	0.83		124.07	85
266	221.56	0.1	0.83		139.211	85
267	221.26	0.51	3.76		146.462	85
268	221.29	0.28	2.65		140.972	85
269	221.18	0.21	2.01		136.634	85
270	221.28	0.2	1.83		133.818	85
271	221.26	0.19	1.8		131.714	85
272	221.11	0.18	1.69		129.84	85
273	221.21	0.17	1.57		128.83	85

274	221.21	0.15	1.46		127.481	85
275	221.36	0.14	1.35		126.368	85
276	221.27	0.13	1.25		125.5	84
277	221.28	0.12	1.19		124.566	84
278	221.35	0.11	1.13		124.082	84
279	221.30	0.11	1.08		123.174	85
280	221.31	0.1	1.03		123.068	84
281	221.35	0.1	1		122.566	85
282	221.25	0.09	0.97		122.115	84
283	221.26	0.09	0.95		121.934	84
284	221.26	0.09	0.93		121.649	84
285	221.17	0.09	0.91		121.077	85
286	221.32	0.08	0.89		120.503	84
287	221.22	0.08	0.88		120.488	84
288	221.23	0.08	0.86		123.577	84
289	220.81	0.32	2.56		148.114	84
290	220.62	0.35	2.51		157.993	84
291	220.23	0.75	3.12		165.484	84
292	219.82	0.03	0.82		173.142	84
293	219.38	1.45	5.62		181.093	84
294	218.63	1.95	8.67		188.789	85
295	218.00	2.35	10.69		196.234	84
296	217.42	1.68	12.35		204.568	84
297	216.62	1.36	13.27		214.971	84
298	215.72	1.23	13.31		224.882	84
299	214.88	1.18	13.3		233.516	84
300	214.01	0.71	15.04		241.816	84
301	213.06	0.1	16.58		248.671	84
302	212.30	0.13	16.52		254.226	84
303	211.43	0.1	16.45		257.835	84
304	210.43	0.1	16.4		261.422	84
305	209.38	0.1	16.74		265.646	84
306	208.64	0.1	17.21		269.393	84
307	207.48	0.12	17.38		271.861	84
308	206.73	0.12	17.09		272.271	84
309	205.94	0.12	16.87		273.291	84
310	204.82	0.12	16.73		274.718	84
311	203.79	0.12	16.61		275.876	84
312	203.16	0.12	16.64		277.116	84
313	201.81	0.13	16.76		275.63	84
314	201.65	0.14	16.86		275.138	84
315	200.56	0.13	16.69		274.971	84

316	199.87	0.13	16.71		275.373	84
317	198.70	0.13	16.66		275.202	84
318	197.96	0.11	16.32		275.808	84
319	197.15	0.11	16.38		276.694	84
320	196.62	0.11	16.27		277.125	84
321	195.58	0.11	16.2		277.377	84
322	194.76	0.12	16.18		278.344	84
323	194.14	0.12	16.02		260.498	84
324	193.75	0.35	16.8		242.786	84
325	193.23	0.9	17.03		232.009	84
326	192.96	3.74	16.61		224.124	84
327	192.69	3.08	16.86		217.774	84
328	192.48	0.76	15.15		212.932	84
329	192.43	0.35	14.24		208.925	84
330	192.38	0.14	12.54		205.531	84
331	192.03	0.17	11.36		202.193	84
332	191.97	0.14	10.45		200.711	84
333	191.90	0.37	7.29		199.093	84
334	191.84	1.9	9.21		197.051	84
335	191.83	2.92	10.07		194.805	84
336	191.62	3.36	10.28		192.367	84
337	191.76	3.37	9.85		190.014	84
338	191.64	3.27	9.46		187.655	84
339	191.67	3.1	8.98		185.345	84
340	191.72	2.83	8.36		183.082	84
341	191.72	2.66	7.98		181.018	84
342	191.66	2.48	7.66		178.985	84
343	191.63	2.27	7.24		177	84
344	191.52	2.11	6.9		175.056	84
345	191.50	1.95	6.55		173.308	84
346	191.56	1.83	6.3		171.534	84
347	191.53	1.7	5.97		169.808	84
348	191.68	1.62	5.81		168.181	84
349	191.68	1.54	5.6		166.593	84
350	191.48	1.45	5.39		165.078	84
351	191.56	1.38	5.22		163.578	84
352	191.50	1.32	5.04		162.236	84
353	191.54	1.26	4.88		160.924	84
354	191.52	1.22	4.77		159.598	84
355	191.64	1.17	4.59		158.314	84
356	191.57	1.13	4.48		157.091	84
357	191.42	1.09	4.35		155.808	84

358	191.43	1.04	4.17		154.605	84
359	191.53	1.01	4.08		153.425	84
360	191.43	0.98	3.97		152.128	84
361	191.34	0.94	3.82		151.122	84
362	191.55	0.91	3.74		150.062	84
363	191.57	0.88	3.63		149.052	84
364	191.31	0.87	3.6		148.161	84
365	191.56	0.86	3.54		147.224	84
366	191.54	0.84	3.47		146.391	84
367	191.53	0.82	3.41		145.693	84
368	191.41	0.8	3.32		144.698	84
369	191.58	0.79	3.27		143.883	84
370	191.43	0.79	3.28		143.42	84
371	191.46	0.78	3.25		142.604	84
372	191.55	0.76	3.19		141.944	84
373	191.49	0.74	3.11		141.344	84
374	191.52	0.73	3.06		140.64	84
375	191.37	0.73	3.05		140.133	84
376	191.43	0.73	3.05		139.492	84
377	191.46	0.73	3.02		138.812	84
378	191.60	0.73	3.04		138.081	84
379	191.60	0.73	3.04		137.365	84
380	191.66	0.75	3.08		136.816	84
381	191.58	0.75	3.1		136.359	84
382	191.45	0.75	3.11		135.992	83
383	191.56	0.75	3.1		135.168	84
384	191.51	0.74	3.06		134.754	84
385	191.45	0.75	3.1		134.226	84
386	191.57	0.73	2.99		133.504	84
387	191.51	0.74	3.05		132.564	84
388	191.49	0.74	3.04		133.202	84
389	191.51	0.75	3.07		132.733	83
390	191.52	0.74	3.03		132.472	84
391	191.48	0.75	3.06		131.936	84
392	191.32	0.74	3.01		155.327	84
393	190.97	1.51	7.46		154.808	83
394	190.90	0.86	4.31		148.944	83
395	190.99	0.72	3.57		144.843	83
396	190.92	0.7	3.46		141.896	83
397	190.99	0.64	3.2		139.616	84
398	191.05	0.56	2.9		137.762	84
399	190.91	0.5	2.62		135.884	83

400	190.87	0.45	2.39		134.285	83
401	190.85	0.41	2.2		133.158	83
402	191.02	0.37	2.03		132.067	83
403	190.98	0.34	1.9		130.907	83
404	190.95	0.31	1.79		130.402	83
405	191.05	0.3	1.72		129.949	83
406	191.03	0.28	1.65		129.398	83
407	190.99	0.27	1.6		128.824	83
408	191.01	0.26	1.57		128.07	83
409	190.90	0.25	1.54		127.818	83
410	191.11	0.24	1.5		127.44	83
411	191.08	0.23	1.46		126.697	83
412	190.93	0.22	1.42		125.72	83
413	191.01	0.22	1.39		126.075	83
414	190.94	0.21	1.36		125.617	83
415	191.03	0.2	1.33		125.318	83
416	190.98	0.2	1.31		125.149	83
417	191.02	0.2	1.32		125.066	83
418	190.93	0.19	1.29		124.659	83
419	190.95	0.19	1.26		124.025	83
420	191.01	0.19	1.24		123.181	83
421	191.05	0.18	1.24		123.62	83
422	191.15	0.18	1.22		123.144	83
423	190.87	0.18	1.24		146.974	83
424	190.71	0.53	3.68		145.094	83
425	190.64	0.37	2.4		140.16	83
426	190.54	0.29	1.93		136.897	83
427	190.58	0.28	1.89		134.32	83
428	190.72	0.26	1.81		132.122	83
429	190.60	0.23	1.69		130.025	83
430	190.69	0.21	1.56		128.765	83
431	190.65	0.19	1.43		127.497	83
432	190.73	0.17	1.33		126.369	83
433	190.66	0.16	1.24		125.767	83
434	190.67	0.15	1.17		124.785	83
435	190.64	0.14	1.11		123.922	83
436	190.69	0.13	1.06		123.382	83
437	190.50	0.12	1.03		122.756	83
438	190.62	0.11	0.97		122.042	83
439	190.66	0.11	0.95		121.553	83
440	190.58	0.1	0.91		120.802	83
441	190.60	0.1	0.9		120.341	83

442	190.80	0.09	0.87		120.163	83
443	190.72	0.09	0.86		119.789	83
444	190.84	0.09	0.84		118.945	83
445	190.73	0.08	0.83		119.006	83
446	190.74	0.08	0.82		118.761	83
447	190.69	0.08	0.82		118.023	83
448	190.79	0.08	0.82		117.614	83
449	190.68	0.08	0.82		116.978	83
450	190.70	0.08	0.8		117.225	83
451	190.78	0.08	0.8		117.259	83
452	190.77	0.08	0.79		116.808	83
453	190.85	0.07	0.78		116.332	82
454	190.49	0.18	1.68		144.044	83
455	190.23	0.41	2.53		155.433	83
456	189.84	0.94	3.01		163.674	82
457	189.39	1.65	4.64		170.91	83
458	188.92	2.17	6.64		178.502	82
459	188.35	2.6	8.74		185.747	83
460	187.80	2.5	10.81		193.83	83
461	187.32	1.95	13.51		205.038	82
462	186.59	1.21	13.92		217.638	82
463	185.82	1.08	13.78		227.429	82
464	185.14	0.92	14.31		236.884	82
465	184.30	0.13	16.08		245.51	82
466	183.52	0.11	16.66		251.52	82
467	182.63	0.13	16.67		255.755	82
468	181.70	0.12	16.85		260.012	83
469	180.99	0.14	17.41		263.865	82
470	179.84	0.15	17.62		266.978	82
471	179.10	0.15	17.34		268.932	82
472	178.18	0.17	17.67		269.008	82
473	177.30	0.15	16.36		268.186	82
474	176.60	0.12	15.95		267.618	83
475	175.36	0.14	16.58		266.848	82
476	174.62	0.26	18.14		269.104	83
477	173.75	0.18	17.99		271.427	82
478	173.01	0.14	17.16		273.237	82
479	171.89	0.11	15.97		270.925	82
480	171.27	0.16	17.37		272.72	82
481	170.04	0.14	17.39		274.66	82
482	169.47	0.1	16.19		274.429	82
483	168.29	0.08	15.39		272.146	82

484	167.40	0.13	16.78		274.871	82
485	166.77	0.11	16.89		276.515	82
486	165.72	0.07	14.63		273.828	82
487	164.77	0.11	16.82		277.278	82
488	164.21	0.07	15.04		256.971	82
489	163.66	3.48	17.66		238.878	82
490	163.38	4.3	17.83		228.847	82
491	162.64	5.2	17.11		221.699	82
492	162.68	5.2	17.22		214.267	82
493	162.41	1.49	15.91		208.768	82
494	162.14	0.89	14.63		204.651	82
495	161.98	0.39	13.13		201.417	82
496	161.95	0.33	12.18		198.578	82
497	161.87	0.21	11.25		197.159	82
498	161.70	0.48	8.24		195.593	82
499	161.62	2	9.79		193.62	82
500	161.71	3.06	10.82		191.426	82
501	161.60	3.47	10.94		189.043	82
502	161.51	3.43	10.33		186.723	82
503	161.54	3.32	9.8		184.324	82
504	161.45	3.07	9.07		182.095	82
505	161.54	2.82	8.38		179.938	82
506	161.48	2.63	7.87		177.84	82
507	161.44	2.44	7.42		175.846	82
508	161.42	2.21	6.85		173.938	82
509	161.48	1.99	6.34		172.169	82
510	161.48	1.82	5.88		170.3	82
511	161.40	1.66	5.48		168.508	82
512	161.42	1.48	5.02		166.777	82
513	161.44	1.34	4.63		165.128	82
514	161.43	1.18	4.17		163.582	82
515	161.39	1.04	3.74		162.058	82
516	161.35	0.93	3.39		160.571	82
517	161.48	0.85	3.12		159.195	82
518	161.38	0.75	2.8		157.733	82
519	161.60	0.66	2.53		156.41	82
520	161.52	0.61	2.34		155.105	82
521	161.44	0.55	2.15		153.746	82
522	161.44	0.5	1.97		152.564	82
523	161.52	0.46	1.83		151.461	81
524	161.58	0.43	1.71		150.46	82
525	161.56	0.4	1.61		149.593	82

526	161.46	0.38	1.52		148.679	82
527	161.52	0.35	1.43		147.87	82
528	161.56	0.34	1.36		146.957	82
529	161.62	0.32	1.3		146.07	82
530	161.52	0.31	1.26		145.404	82
531	161.65	0.31	1.23		144.333	82
532	161.60	0.3	1.2		143.217	82
533	161.67	0.3	1.2		142.75	82
534	161.55	0.3	1.19		141.997	82
535	161.53	0.3	1.18		141.414	82
536	161.59	0.3	1.17		140.801	81
537	161.55	0.29	1.17		140.112	81
538	161.64	0.3	1.17		139.642	82
539	161.61	0.29	1.15		139.052	81
540	161.52	0.29	1.16		138.191	81
541	161.65	0.29	1.16		137.618	82
542	161.66	0.29	1.16		136.819	81
543	161.64	0.3	1.17		135.889	81
544	161.65	0.3	1.19		135.503	81
545	161.64	0.3	1.19		135.421	81
546	161.78	0.3	1.19		135.156	81
547	161.62	0.3	1.19		134.802	82
548	161.70	0.3	1.19		133.793	81
549	161.80	0.29	1.15		132.789	82
550	161.79	0.29	1.16		132.309	82
551	161.58	0.29	1.15		131.882	81
552	161.82	0.29	1.14		131.417	81
553	161.70	0.29	1.13		131.265	81
554	161.76	0.28	1.12		130.45	81
555	161.64	0.29	1.13		130.26	82
556	161.77	0.28	1.12		129.959	81
557	161.56	0.28	1.11		153.506	81
558	161.44	1.4	6.21		154.145	81
559	161.08	0.87	4.02		148.116	81
560	161.41	0.8	3.74		143.53	82
561	161.29	0.78	3.7		140.263	82
562	161.26	0.72	3.43		137.716	81
563	161.19	0.64	3.08		135.684	81
564	161.26	0.55	2.7		133.965	81
565	161.23	0.48	2.36		132.66	81
566	161.28	0.42	2.07		131.291	81
567	161.28	0.37	1.84		130.192	81

568	161.27	0.33	1.64		129.32	81
569	161.45	0.29	1.47		128.403	81
570	161.34	0.26	1.32		127.857	81
571	161.32	0.14	0.76		127.552	81
572	161.27	0.21	1.06		127.315	81
573	161.38	0.19	1		126.035	81
574	161.42	0.18	0.93		125.677	81
575	161.40	0.17	0.88		124.682	81
576	161.30	0.16	0.83		124.343	81
577	161.40	0.15	0.79		124.384	81
578	161.44	0.14	0.75		124.225	81
579	161.51	0.13	0.72		123.879	81
580	161.39	0.12	0.69		123.47	81
581	161.49	0.12	0.66		122.579	81
582	161.40	0.11	0.64		122.31	81
583	161.31	0.11	0.62		122.285	81
584	161.34	0.1	0.6		120.992	81
585	161.40	0.1	0.59		121.206	81
586	161.34	0.1	0.58		120.994	81
587	161.41	0.09	0.56		120.97	81
588	161.21	0.09	0.56		144.284	81
589	161.13	0.35	2.25		143.426	81
590	161.13	0.22	1.46		138.174	81
591	161.06	0.19	1.26		134.471	81
592	161.21	0.2	1.31		131.547	81
593	161.01	0.2	1.29		129.617	81
594	161.16	0.18	1.19		127.763	81
595	161.12	0.16	1.08		126.207	81
596	161.11	0.14	0.95		124.811	81
597	161.23	0.12	0.86		124.271	81
598	161.23	0.11	0.79		122.99	81
599	161.12	0.1	0.71		121.831	81
600	161.15	0.09	0.65		121.117	81
601	161.22	0.08	0.6		120.311	81
602	161.33	0.08	0.57		120.027	81
603	161.22	0.07	0.53		119.678	81
604	161.28	0.06	0.51		119.188	81
605	161.13	0.06	0.49		119.005	81
606	161.09	0.06	0.47		118.286	81
607	161.27	0.05	0.45		117.464	81
608	161.18	0.05	0.44		117.163	81
609	161.19	0.05	0.43		116.058	81

610	161.21	0.05	0.42		116.596	81
611	161.26	0.05	0.41		116.394	80
612	161.28	0.04	0.4		116.218	81
613	161.34	0.04	0.4		116.044	81
614	161.39	0.04	0.4		115.128	81
615	161.20	0.04	0.39		131.539	81
616	161.13	0.25	2.14		147.629	81
617	160.74	0.13	0.84		155.189	81
618	160.51	0.3	1.15		160.244	81
619	160.27	0.53	1.92		164.742	81
620	160.07	1.01	3.34		170.471	81
621	159.60	1.81	5.99		178.685	81
622	159.16	2.38	8.64		187.36	81
623	158.53	2.88	11.31		195.863	81
624	158.07	2.37	12.42		205.766	81
625	157.43	2.13	12.05		214.562	81
626	156.96	1.33	13.24		222.828	81
627	156.41	1.04	13.67		230.996	81
628	155.67	0.82	14.18		239.246	81
629	154.89	0.09	16.41		247.744	81
630	154.22	0.1	16.98		253.5	81
631	153.30	0.11	16.99		258.517	81
632	152.35	0.18	17.7		258.778	80
633	151.35	0.12	17.07		259.473	80
634	150.62	0.11	16.93		260.179	81
635	149.84	0.11	16.79		261.249	80
636	148.99	0.11	16.63		261.378	80
637	148.07	0.11	16.74		261.95	80
638	147.38	0.11	16.65		262.733	80
639	146.55	0.11	16.69		265.026	80
640	145.60	0.11	16.77		268.003	80
641	144.67	0.1	16.93		270.763	80
642	143.71	0.11	17.19		272.855	80
643	142.52	0.1	16.86		274.439	80
644	142.17	0.09	16.54		275.522	80
645	141.25	0.09	16.58		276.513	80
646	140.26	0.09	16.48		278.336	80
647	139.61	0.08	16.22		279.803	80
648	138.53	0.08	16.37		281.091	80
649	137.47	0.08	16.45		280.466	80
650	136.93	0.08	16.05		282.324	80
651	136.09	0.05	15.17		279.085	80

652	135.31	0.07	16.3		269.503	80
653	134.75	0.03	14.73		247.96	80
654	134.42	0.17	16.57		234.889	81
655	134.09	1.55	17.42		225.87	80
656	133.74	1.16	17.46		218.831	81
657	133.71	0.34	12.99		213.377	80
658	133.57	0.2	12.78		208.733	80
659	133.32	0.06	11.13		204.951	80
660	133.35	0.04	9.69		201.801	80
661	133.19	0.05	9		199.77	80
662	133.18	0.06	6.28		198.536	80
663	133.18	0.77	7.07		196.722	80
664	132.98	1.69	8.35		194.561	80
665	133.06	2.26	8.93		192.11	80
666	132.90	2.53	9.03		189.499	80
667	132.92	2.57	8.63		187.065	80
668	132.76	2.48	8.02		184.598	80
669	132.87	2.41	7.6		182.295	80
670	132.74	2.28	7.08		180.102	80
671	132.69	2.16	6.65		177.938	80
672	132.81	1.98	6.09		175.869	80
673	132.90	1.87	5.73		173.881	80
674	132.79	1.72	5.29		172.038	80
675	132.86	1.58	4.92		170.108	80
676	132.81	1.45	4.54		168.173	80
677	132.77	1.32	4.21		166.462	80
678	132.73	1.23	3.96		164.817	80
679	132.82	1.15	3.72		163.22	80
680	132.83	1.08	3.54		161.777	80
681	132.83	1.01	3.35		160.294	80
682	132.83	0.96	3.21		158.83	80
683	132.82	0.92	3.1		157.482	80
684	132.94	0.88	3.01		156.068	80
685	132.77	0.83	2.88		154.648	80
686	132.88	0.81	2.83		153.334	80
687	132.88	0.78	2.75		152.114	80
688	132.86	0.79	2.77		150.964	80
689	132.76	0.76	2.72		149.696	80
690	132.91	0.75	2.69		148.713	80
691	132.81	0.75	2.71		147.663	80
692	132.81	0.74	2.69		146.701	80
693	133.02	0.74	2.69		146.043	80

694	132.87	0.74	2.7		145.087	80
695	132.92	0.74	2.7		144.23	80
696	132.80	0.73	2.68		143.329	80
697	132.87	0.73	2.69		142.464	80
698	132.87	0.72	2.67		141.677	80
699	132.80	0.73	2.68		141.116	80
700	132.96	0.73	2.71		140.565	80
701	132.96	0.73	2.71		140.029	80
702	132.93	0.72	2.69		139.33	80
703	132.94	0.72	2.68		138.361	80
704	132.97	0.71	2.66		137.707	80
705	132.88	0.72	2.67		137.026	80
706	132.89	0.71	2.65		136.498	80
707	132.92	0.71	2.66		135.806	80
708	132.93	0.72	2.67		135.461	80
709	133.10	0.71	2.64		134.816	80
710	132.89	0.7	2.63		134.053	80
711	132.95	0.69	2.6		133.801	80
712	132.93	0.69	2.6		133.25	80
713	132.89	0.69	2.6		132.648	80
714	133.09	0.69	2.57		132.061	80
715	132.88	0.69	2.57		131.732	80
716	132.91	0.68	2.56		131.009	80
717	133.00	0.68	2.55		130.329	80
718	132.98	0.67	2.53		129.88	80
719	132.95	0.67	2.53		129.36	80
720	133.03	0.66	2.51		129.07	79
721	132.87	0.66	2.51		135.366	79
722	132.54	2.46	9.66		155.432	80
723	132.57	1.21	5.83		148.647	80
724	132.60	1	4.86		143.859	80
725	132.51	0.99	4.81		140.316	79
726	132.64	0.95	4.59		137.831	79
727	132.56	0.84	4.1		135.619	79
728	132.49	0.74	3.61		133.826	79
729	132.63	0.64	3.12		132.511	79
730	132.64	0.56	2.75		130.91	79
731	132.57	0.49	2.42		129.512	79
732	132.63	0.44	2.18		128.533	79
733	132.64	0.4	1.98		127.749	79
734	132.77	0.36	1.81		126.922	79
735	132.67	0.33	1.68		126.255	79

736	132.60	0.31	1.58		125.238	79
737	132.64	0.29	1.48		124.645	79
738	132.67	0.27	1.42		124.34	79
739	132.59	0.25	1.36		124.048	79
740	132.71	0.24	1.31		123.498	79
741	132.67	0.24	1.29		123.402	79
742	132.65	0.23	1.25		122.555	79
743	132.55	0.22	1.22		121.709	79
744	132.69	0.22	1.21		121.441	79
745	132.57	0.21	1.18		121.443	79
746	132.75	0.21	1.2		121.333	79
747	132.69	0.2	1.17		121.369	79
748	132.64	0.2	1.17		120.997	79
749	132.64	0.2	1.17		120.588	79
750	132.75	0.2	1.17		120.483	79
751	132.66	0.2	1.17		119.62	79
752	132.70	0.2	1.17		137.767	79
753	132.59	0.64	4.14		143.864	79
754	132.53	0.51	3.02		138.005	79
755	132.53	0.38	2.27		133.835	79
756	132.46	0.37	2.22		130.625	79
757	132.46	0.36	2.23		128.505	79
758	132.38	0.34	2.14		126.943	79
759	132.58	0.31	1.99		125.749	79
760	132.42	0.28	1.86		124.561	79
761	132.57	0.25	1.72		123.402	79
762	132.47	0.23	1.59		122.405	79
763	132.39	0.21	1.48		121.485	79
764	132.49	0.19	1.37		120.824	79
765	132.47	0.18	1.31		120.412	79
766	132.52	0.17	1.24		119.898	79
767	132.50	0.16	1.17		119.059	79
768	132.45	0.15	1.13		118.595	79
769	132.42	0.14	1.1		118.12	79
770	132.43	0.14	1.07		117.963	79
771	132.46	0.13	1.04		117.1	79
772	132.51	0.13	1.03		116.359	78
773	132.54	0.12	0.99		115.971	78
774	132.53	0.12	1		115.376	78
775	132.49	0.12	1.03		139.239	79
776	132.27	0.41	2.64		154.038	79
777	131.84	1.25	4.39		166.309	79

778	131.34	2.27	7.23		177.285	79
779	130.96	3.01	10.68		188.449	79
780	130.24	2.08	15.24		203.299	79
781	129.81	1.05	14.69		217.277	79
782	129.18	0.91	13.81		226.602	79
783	128.77	0.67	13.79		233.241	79
784	128.23	0.37	14.42		239.505	79
785	127.56	0.18	14.48		245.187	79
786	126.98	0.17	14.96		249.5	79
787	126.31	0.15	15.12		253.042	79
788	125.48	0.1	15.41		256.804	79
789	124.83	0.11	15.74		259.091	79
790	124.09	0.11	15.81		261.901	79
791	123.37	0.11	16.25		266.157	79
792	122.72	0.16	17.38		269.07	78
793	121.80	0.12	16.82		271.365	79
794	120.94	0.11	16.5		272.617	79
795	119.94	0.11	16.58		274.304	79
796	119.55	0.11	16.33		275.214	79
797	118.37	0.1	16.5		276.685	79
798	117.50	0.1	16.54		277.994	79
799	116.84	0.11	17.04		276.517	79
800	116.18	0.11	16.67		277.614	79
801	115.08	0.09	16.27		280.009	79
802	114.39	0.09	16.28		281.681	79
803	113.35	0.08	16.25		283.192	79
804	112.61	0.08	16.27		284.27	79
805	111.64	0.08	16.14		279.708	79
806	111.37	0.12	14.25		254.119	79
807	110.92	1.8	17.98		239.162	79
808	110.39	3.21	17.05		230.045	79
809	110.22	5.2	17.16		222.368	79
810	109.95	1.89	15.2		214.596	79
811	109.72	0.87	15.48		209.158	78
812	109.62	0.54	14.54		205.111	78
813	109.43	0.33	12.96		201.847	79
814	109.24	0.3	12.15		199.251	79
815	109.13	0.16	9.22		198.062	79
816	109.19	1.41	9.43		196.237	79
817	108.99	2.77	10.67		193.891	79
818	108.93	3.38	10.98		191.394	79
819	108.86	3.61	10.83		188.729	79

820	108.83	3.58	10.37		186.222	79
821	108.82	3.39	9.68		183.746	79
822	108.78	3.22	9.12		181.262	79
823	108.74	3.01	8.53		179.015	79
824	108.73	2.81	7.94		176.874	79
825	108.74	2.61	7.47		174.825	79
826	108.74	2.36	6.82		172.786	79
827	108.66	2.16	6.29		170.895	79
828	108.69	2	5.88		169.038	79
829	108.65	1.84	5.44		167.338	78
830	108.67	1.68	4.99		165.622	78
831	108.70	1.51	4.58		164.006	79
832	108.69	1.38	4.2		162.31	79
833	108.72	1.26	3.87		160.708	79
834	108.78	1.14	3.53		159.184	78
835	108.71	1.03	3.21		157.729	77
836	108.61	0.94	2.92		156.284	77
837	108.74	0.84	2.65		154.902	77
838	108.71	0.75	2.43		153.562	77
839	108.65	0.67	2.19		152.22	77
840	108.78	0.6	1.99		151.013	77
841	108.69	0.55	1.84		149.73	77
842	108.81	0.49	1.68		148.622	77
843	108.85	0.45	1.54		147.596	77
844	108.84	0.4	1.4		146.579	77
845	108.87	0.36	1.28		145.61	77
846	108.79	0.33	1.18		144.888	76
847	108.90	0.3	1.08		143.921	76
848	108.89	0.28	1		143.058	76
849	108.86	0.25	0.93		142.086	76
850	108.82	0.23	0.87		141.458	77
851	108.90	0.22	0.81		140.529	77
852	108.80	0.21	0.76		139.66	77
853	108.96	0.19	0.72		138.782	77
854	108.90	0.19	0.69		138.194	77
855	108.79	0.18	0.67		137.514	78
856	108.93	0.17	0.65		136.794	78
857	109.02	0.17	0.62		136.39	78
858	108.86	0.16	0.6		135.609	78
859	109.17	0.16	0.59		134.876	78
860	108.96	0.16	0.57		134.12	77
861	108.98	0.16	0.57		133.306	77

862	108.99	0.16	0.57		132.592	77
863	108.98	0.15	0.56		132.317	77
864	109.12	0.15	0.56		131.578	77
865	109.02	0.15	0.56		131.483	78
866	109.08	0.16	0.56		130.828	78
867	109.04	0.15	0.55		130.044	78
868	109.08	0.16	0.56		129.891	78
869	109.00	0.16	0.55		129.349	78
870	109.03	0.15	0.54		128.612	78
871	109.00	0.16	0.55		128.154	78
872	108.98	0.16	0.55		127.655	78
873	108.97	0.16	0.55		127.31	78
874	109.15	0.16	0.56		126.927	78
875	108.85	2.57	7.32		155.648	78
876	108.74	1.45	5.51		148.156	78
877	108.74	1.16	4.49		142.564	78
878	108.73	1.17	4.54		138.883	78
879	108.73	1.16	4.53		135.988	78
880	108.67	1.07	4.23		133.731	78
881	108.77	0.95	3.75		131.863	78
882	108.75	0.81	3.21		130.356	78
883	108.68	0.7	2.76		129.207	78
884	108.82	0.61	2.43		128.004	78
885	108.70	0.53	2.13		126.931	78
886	108.84	0.47	1.9		125.778	77
887	108.81	0.41	1.68		124.91	78
888	108.67	0.38	1.52		124.395	78
889	108.78	0.34	1.37		123.778	78
890	108.89	0.3	1.25		123.216	78
891	108.72	0.28	1.15		122.597	78
892	108.82	0.25	1.06		122.214	78
893	108.86	0.23	0.98		121.971	78
894	108.87	0.21	0.88		121.83	78
895	108.85	0.2	0.84		121.149	78
896	108.81	0.18	0.78		120.735	78
897	108.64	0.17	0.72		120.285	78
898	108.73	0.16	0.69		120.012	78
899	108.88	0.15	0.65		119.708	78
900	108.65	0.14	0.62		119.233	78
901	108.88	0.13	0.59		118.341	78
902	108.98	0.13	0.56		118.343	78
903	108.74	0.12	0.54		117.885	78

904	108.75	0.12	0.52		117.767	78
905	108.91	0.11	0.51		119.128	78
906	108.73	0.98	4.18		143.894	78
907	108.77	0.51	2.4		137.5	78
908	108.62	0.37	1.79		132.835	78
909	108.70	0.36	1.72		129.46	78
910	108.71	0.36	1.76		126.992	77
911	108.52	0.35	1.72		125.096	77
912	108.64	0.32	1.62		123.362	77
913	108.81	0.29	1.48		122.099	77
914	108.61	0.26	1.37		121.351	77
915	108.70	0.23	1.24		120.483	77
916	108.57	0.21	1.12		119.883	77
917	108.69	0.19	1.02		118.66	77
918	108.52	0.17	0.92		118.255	77
919	108.63	0.16	0.84		117.534	77
920	108.77	0.14	0.76		117.327	77
921	108.75	0.13	0.71		118.575	77
922	108.50	0.43	2.54		146.491	77
923	108.44	0.63	2.31		158.129	77
924	108.17	1.18	3.53		167.965	77
925	107.72	2.16	6.04		179.219	76
926	107.43	2.78	9.45		189.878	76
927	106.79	2.77	11.87		200.251	77
928	106.36	2.41	11.55		211.237	76
929	105.54	2.32	12.19		219.605	76
930	105.02	1.42	12.83		227.37	76
931	104.35	0.46	14.11		235.15	76
932	103.87	0.11	15.23		243.276	76
933	103.05	0.12	15.63		250.36	76
934	102.07	0.1	15.75		256.886	77
935	101.58	0.1	16.01		260.121	76
936	100.62	0.1	15.7		261.904	76
937	100.32	0.12	15.59		264.027	76
938	99.44	0.12	15.79		266.242	76
939	98.60	0.12	16.11		269.108	76
940	97.99	0.12	16.16		271.527	76
941	97.26	0.13	16.21		273.484	76
942	96.37	0.13	16.32		274.558	76
943	95.80	0.12	15.66		275.335	76
944	94.48	0.13	15.98		276.059	76
945	93.84	0.13	15.86		277.481	76

946	93.20	0.11	15.91		279.17	76
947	92.56	0.11	16.05		280.42	76
948	91.62	0.08	14.72		279.225	76
949	91.05	0.09	15.42		280.695	77
950	90.21	0.09	15.75		282.801	76
951	89.39	0.08	16.34		281.61	76
952	88.56	0.09	16.55		281.041	76
953	87.95	0.07	15.1		267.593	76
954	87.57	0.03	12.83		246.686	76
955	87.32	0.1	14.44		234.045	76
956	86.90	1.38	16.46		225.046	76
957	86.75	1.26	16.49		218.259	77
958	86.56	0.51	13.34		212.718	77
959	86.28	0.39	13.21		208.093	76
960	86.31	0.2	11.92		204.391	77
961	86.12	0.12	10.97		201.114	76
962	85.96	0.08	10.11		198.875	76
963	85.79	0.12	7.15		197.386	77
964	85.77	1.28	8.53		195.476	76
965	85.80	2.41	9.94		193.138	76
966	85.60	2.93	10.32		190.533	76
967	85.52	3.06	10.07		187.999	76
968	85.57	3.04	9.63		185.432	76
969	85.42	2.94	9.12		182.991	76
970	85.45	2.84	8.69		180.665	76
971	85.49	2.66	8.12		178.422	76
972	85.45	2.52	7.7		176.295	76
973	85.50	2.35	7.19		174.239	76
974	85.50	2.23	6.85		172.393	76
975	85.22	2.07	6.42		170.463	76
976	85.55	1.89	5.9		168.654	76
977	85.20	1.83	5.73		166.949	76
978	85.35	1.7	5.35		165.216	76
979	85.27	1.58	5.02		163.591	76
980	85.36	1.46	4.68		162.036	76
981	85.31	1.36	4.4		160.45	76
982	85.29	1.3	4.22		159.021	76
983	85.27	1.23	4		157.59	76
984	85.29	1.18	3.82		156.215	76
985	85.43	1.13	3.66		154.837	76
986	85.28	1.09	3.54		153.524	76
987	85.28	1.06	3.43		152.287	76

988	85.44	1.03	3.33		151.028	76
989	85.37	1.01	3.24		149.804	76
990	85.32	1	3.19		148.745	77
991	85.25	1.01	3.2		147.688	76
992	85.40	0.99	3.13		146.525	76
993	85.37	0.99	3.11		145.681	76
994	85.23	1	3.13		144.817	77
995	85.36	0.99	3.09		144.015	77
996	85.22	0.98	3.05		142.905	77
997	85.26	0.96	2.97		142.238	77
998	85.47	0.96	2.93		141.571	78
999	85.34	0.93	2.84		140.628	77
1000	85.33	0.91	2.76		139.762	78
1001	85.38	0.89	2.71		139.165	78
1002	85.30	0.86	2.61		138.229	78
1003	85.36	0.83	2.51		137.368	78
1004	85.22	0.81	2.44		136.829	78
1005	85.34	0.79	2.36		136.254	78
1006	85.42	0.77	2.3		135.479	78
1007	85.31	0.73	2.17		134.688	77
1008	85.44	0.71	2.12		134.19	78
1009	85.27	0.69	2.06		133.804	78
1010	85.32	0.68	1.99		133.201	78
1011	85.42	0.66	1.94		132.567	77
1012	85.34	0.64	1.87		132.104	78
1013	85.42	0.62	1.84		131.394	78
1014	85.36	0.61	1.79		130.519	77
1015	85.39	0.6	1.77		130.062	77
1016	85.42	0.59	1.72		129.95	78
1017	85.19	0.57	1.68		129.772	77
1018	85.40	0.57	1.66		129.237	78
1019	85.42	0.56	1.62		128.638	78
1020	85.52	0.55	1.59		128.557	78
1021	85.33	0.54	1.57		127.989	78
1022	85.43	0.54	1.55		141.145	79
1023	84.92	3.58	10.53		154.359	79
1024	85.22	1.66	6.36		147.492	79
1025	84.95	1.35	5.21		142.527	79
1026	84.87	1.37	5.14		139.152	79
1027	85.10	1.36	5.06		136.306	79
1028	84.94	1.25	4.69		134.313	79
1029	85.13	1.11	4.18		132.348	79

1030	84.98	0.98	3.68		130.751	79
1031	85.01	0.85	3.21		129.553	79
1032	84.99	0.74	2.78		128.295	79
1033	85.08	0.66	2.48		127.112	79
1034	85.09	0.58	2.2		125.983	79
1035	85.03	0.51	1.97		125.386	79
1036	85.01	0.46	1.77		124.296	79
1037	84.95	0.42	1.62		124.469	79
1038	85.04	0.38	1.48		124.189	79
1039	84.94	0.36	1.38		123.344	79
1040	85.15	0.33	1.28		123.065	79
1041	85.05	0.3	1.19		122.449	79
1042	85.03	0.29	1.14		122.074	79
1043	85.09	0.27	1.07		121.585	78
1044	85.11	0.26	1.02		121.503	79
1045	85.08	0.25	0.99		121.045	79
1046	85.09	0.23	0.94		120.529	78
1047	84.99	0.23	0.91		120.255	79
1048	85.02	0.22	0.88		119.424	79
1049	85.12	0.21	0.85		119.163	79
1050	85.20	0.2	0.82		118.251	79
1051	85.17	0.2	0.81		117.988	79
1052	85.06	0.19	0.79		118.613	79
1053	85.07	0.19	0.79		139.04	78
1054	84.94	0.93	4.49		143.074	78
1055	84.83	0.69	3.48		136.983	78
1056	84.94	0.5	2.57		132.866	78
1057	84.73	0.48	2.42		129.896	78
1058	84.89	0.48	2.41		127.636	78
1059	84.74	0.46	2.34		126.14	78
1060	84.68	0.43	2.21		124.421	78
1061	84.79	0.39	2.05		123.04	78
1062	84.91	0.36	1.9		122.68	78
1063	84.93	0.33	1.77		121.95	78
1064	84.93	0.3	1.63		121.172	78
1065	84.81	0.27	1.5		120.288	78
1066	84.74	0.25	1.41		119.391	78
1067	84.82	0.23	1.31		118.86	78
1068	84.88	0.21	1.23		118.183	78
1069	84.94	0.2	1.16		117.711	78
1070	84.98	0.18	1.09		117.252	78
1071	84.96	0.17	1.05		117.298	78

1072	84.87	0.16	0.99		116.843	78
1073	84.78	0.16	0.96		116.585	78
1074	84.86	0.17	1.01		139.986	78
1075	84.50	0.62	3.23		155.152	78
1076	84.43	1.1	3.94		165.623	78
1077	83.94	1.55	5.35		175.697	78
1078	83.54	1.49	9.06		187.184	78
1079	82.96	0.76	14.3		202.14	78
1080	82.43	0.28	15.49		218.194	79
1081	81.70	0.09	15.69		232.613	78
1082	80.99	0.07	16.02		241.13	78
1083	80.28	0.09	16.03		247.082	79
1084	79.52	0.1	16.29		251.843	78
1085	78.95	0.1	16.52		256.079	78
1086	78.03	0.11	16.86		258.891	78
1087	77.10	0.08	16.38		260.687	78
1088	76.74	0.08	16.66		262.302	78
1089	75.92	0.08	16.39		262.159	78
1090	75.40	0.08	16.59		264.594	78
1091	74.66	0.08	16.45		267.058	78
1092	73.83	0.08	16.32		269.437	78
1093	73.06	0.08	16.64		270.295	78
1094	72.60	0.08	16.56		270.77	78
1095	71.65	0.08	16.63		271.588	78
1096	70.92	0.07	16.36		272.343	78
1097	70.04	0.08	16.99		270.182	78
1098	69.03	0.09	17.13		270.624	78
1099	68.56	0.08	17.02		271.639	78
1100	68.07	0.07	16.72		274.304	78
1101	67.37	0.06	15.76		277.273	78
1102	66.64	0.05	15.26		278.872	78
1103	65.90	0.05	15.29		278.64	78
1104	65.14	0.05	16.11		277.796	78
1105	64.72	0.05	16.03		262.659	79
1106	64.25	0.05	15.17		243.84	79
1107	63.91	0.12	15.55		232.481	79
1108	63.61	2.64	15.98		223.954	79
1109	63.39	2.34	16.54		217.005	79
1110	63.27	0.46	14.2		211.444	79
1111	63.18	0.24	13.58		207.013	79
1112	62.86	0.11	12.38		203.506	79
1113	62.82	0.13	11.67		200.355	79

1114	62.80	0.1	10.98		198.619	79
1115	62.54	0.4	8.57		197.062	79
1116	62.38	1.64	10.06		195.024	79
1117	62.48	2.35	10.86		192.653	79
1118	62.40	2.47	10.51		190.045	79
1119	62.27	2.44	10.02		187.597	79
1120	62.33	2.22	9.12		185.145	79
1121	62.31	2.01	8.33		182.813	79
1122	62.28	1.81	7.6		180.592	79
1123	62.35	1.6	6.87		178.48	79
1124	62.31	1.42	6.2		176.38	79
1125	62.41	1.23	5.52		174.402	79
1126	62.26	1.09	4.95		172.492	79
1127	62.29	0.93	4.28		170.639	79
1128	62.36	0.79	3.7		168.763	79
1129	62.32	0.68	3.22		167.031	79
1130	62.34	0.6	2.83		165.367	79
1131	62.40	0.52	2.52		163.768	79
1132	62.23	0.45	2.22		162.257	79
1133	62.42	0.39	1.97		160.733	79
1134	62.33	0.34	1.76		159.362	79
1135	62.42	0.3	1.56		157.894	79
1136	62.41	0.26	1.38		156.451	79
1137	62.40	0.23	1.24		155.045	79
1138	62.35	0.21	1.13		153.753	79
1139	62.33	0.19	1.03		152.551	79
1140	62.36	0.17	0.96		151.451	79
1141	62.32	0.16	0.87		150.467	79
1142	62.39	0.15	0.82		149.402	80
1143	62.43	0.13	0.77		148.374	79
1144	62.40	0.12	0.71		147.633	79
1145	62.45	0.12	0.67		146.691	79
1146	62.29	0.11	0.63		145.778	79
1147	62.48	0.11	0.6		144.757	79
1148	62.69	0.1	0.57		144.139	79
1149	62.49	0.1	0.56		143.124	79
1150	62.56	0.09	0.54		142.547	79
1151	62.55	0.09	0.53		141.652	80
1152	62.51	0.09	0.51		140.738	80
1153	62.58	0.09	0.5		139.973	80
1154	62.51	0.08	0.49		139.53	80
1155	62.51	0.08	0.48		138.739	80

1156	62.52	0.08	0.48		138.312	80
1157	62.66	0.08	0.48		137.672	80
1158	62.50	0.08	0.47		136.877	80
1159	62.52	0.08	0.47		136.236	80
1160	62.51	0.08	0.47		135.559	80
1161	62.62	0.08	0.47		134.596	80
1162	62.80	0.08	0.47		133.978	80
1163	62.65	0.08	0.47		133.349	80
1164	62.75	0.08	0.47		132.607	80
1165	62.64	0.08	0.47		131.709	80
1166	62.72	0.08	0.47		131.243	80
1167	62.60	0.08	0.47		130.873	80
1168	62.53	0.08	0.46		130.552	80
1169	62.52	0.08	0.47		129.58	80
1170	62.48	0.09	0.47		128.987	80
1171	62.49	0.09	0.48		128.981	80
1172	62.79	0.09	0.48		128.156	80
1173	62.71	0.09	0.48		128.166	80
1174	62.68	0.1	0.5		151.867	80
1175	62.30	1.91	8.91		153.175	80
1176	62.32	1.32	6.19		146.636	80
1177	62.28	1.13	5.5		142.161	80
1178	62.27	1.11	5.52		138.928	80
1179	62.33	1.06	5.38		136.656	80
1180	62.30	0.94	4.82		134.127	80
1181	62.42	0.82	4.28		132.436	80
1182	62.38	0.72	3.74		131.277	80
1183	62.51	0.62	3.22		129.976	80
1184	62.33	0.54	2.82		129.195	80
1185	62.32	0.47	2.49		127.786	80
1186	62.34	0.41	2.19		126.918	80
1187	62.36	0.36	1.93		126.127	80
1188	62.51	0.32	1.72		125.503	80
1189	62.45	0.29	1.55		125.012	80
1190	62.10	0.26	1.4		124.431	80
1191	62.49	0.24	1.29		124.094	80
1192	62.28	0.22	1.2		123.616	80
1193	62.46	0.2	1.11		122.958	80
1194	62.38	0.19	1.04		122.432	80
1195	62.57	0.17	0.96		121.979	80
1196	62.58	0.16	0.9		121.759	80
1197	62.42	0.15	0.85		121.762	80

1198	62.42	0.14	0.8		121.253	80
1199	62.38	0.13	0.75		120.769	81
1200	62.42	0.13	0.72		120.781	80
1201	62.49	0.12	0.68		120.378	80
1202	62.33	0.11	0.66		120.044	80
1203	62.46	0.11	0.63		120.552	81
1204	62.41	0.1	0.61		120.071	81
1205	62.44	0.1	0.59		141.434	80
1206	62.34	0.65	4.16		142.886	81
1207	62.15	0.5	3.14		136.916	81
1208	62.24	0.38	2.45		132.777	81
1209	62.23	0.36	2.34		129.883	81
1210	62.34	0.35	2.3		127.535	81
1211	62.13	0.32	2.18		125.732	81
1212	62.04	0.3	2.07		124.447	81
1213	62.38	0.28	1.96		123.533	80
1214	62.23	0.26	1.88		122.385	81
1215	62.27	0.24	1.76		121.848	81
1216	62.06	0.22	1.66		121.785	81
1217	62.05	0.21	1.57		121.122	81
1218	62.25	0.19	1.48		120.608	81
1219	62.15	0.18	1.4		119.974	81
1220	62.10	0.17	1.33		119.032	81
1221	62.16	0.15	1.24		118.794	81
1222	62.24	0.15	1.18		118.669	81
1223	62.25	0.14	1.13		118.307	81
1224	62.21	0.13	1.08		118.396	81
1225	62.31	0.12	1.02		117.646	81
1226	62.13	0.11	0.97		117.357	81
1227	62.29	0.13	1.04		141.037	81
1228	62.01	0.52	3.37		155.902	81
1229	61.84	1.42	4.21		166.756	81
1230	61.25	2.08	7.4		180.732	81
1231	60.81	2.23	13.1		195.06	81
1232	60.14	0.97	16		212.265	81
1233	59.60	0.5	15.51		224.715	81
1234	59.15	0.12	15.54		233.609	81
1235	58.66	0.08	15.8		241.807	81
1236	57.85	0.06	16.18		248.048	81
1237	57.41	0.08	16.51		252.972	81
1238	56.60	0.1	16.65		256.89	81
1239	55.88	0.1	16.56		259.469	81

1240	55.34	0.11	16.73		262.798	81
1241	54.55	0.12	17.04		266.176	81
1242	54.03	0.14	17.06		268.794	81
1243	53.26	0.15	17.1		270.035	81
1244	52.64	0.15	16.64		270.932	81
1245	51.93	0.14	16.42		272.425	81
1246	51.14	0.14	16.77		274.947	81
1247	50.47	0.13	16.66		276.084	81
1248	49.64	0.1	16.34		277.178	81
1249	48.79	0.1	16.44		278.568	81
1250	48.24	0.09	16.44		280.102	82
1251	47.42	0.09	16.53		279.463	81
1252	46.57	0.1	16.48		281.727	81
1253	45.52	0.07	15.2		282.246	81
1254	45.03	0.07	15.09		282.99	81
1255	44.52	0.06	14.82		283.214	81
1256	44.02	0.05	14.51		283.094	82
1257	43.06	0.07	15.21		273.607	82
1258	42.75	0.04	12.14		251.088	82
1259	42.53	0.05	13.54		237.688	82
1260	42.19	0.54	15.14		228.767	82
1261	41.93	0.78	15.78		221.657	82
1262	41.75	0.35	12.52		216.087	82
1263	41.45	0.29	13.27		211.42	82
1264	41.32	0.16	12.14		207.541	82
1265	41.38	0.1	11.06		204.426	82
1266	41.26	0.1	10.32		201.992	82
1267	41.24	0.08	7.44		200.512	82
1268	41.04	1.06	8.18		198.749	82
1269	40.96	2.17	9.53		196.486	82
1270	40.89	2.73	9.95		194.064	82
1271	40.85	2.88	9.69		191.566	82
1272	40.89	2.84	9.15		189.173	82
1273	40.97	2.76	8.66		186.702	82
1274	40.92	2.6	8.04		184.467	82
1275	40.84	2.48	7.6		182.239	82
1276	40.87	2.3	7		180.124	82
1277	40.74	2.13	6.51		178.094	82
1278	40.83	1.99	6.1		176.136	82
1279	40.72	1.79	5.5		174.239	82
1280	40.68	1.64	5.09		172.443	82
1281	40.81	1.51	4.73		170.625	82

1282	40.83	1.37	4.35		168.835	82
1283	40.82	1.26	4.04		167.232	82
1284	40.78	1.14	3.68		165.607	82
1285	40.80	1.06	3.45		164.136	82
1286	40.83	0.96	3.14		162.687	82
1287	40.82	0.86	2.86		161.278	82
1288	40.92	0.78	2.61		159.909	82
1289	40.73	0.71	2.42		158.51	83
1290	40.68	0.65	2.22		157.131	82
1291	40.66	0.6	2.07		155.821	82
1292	40.81	0.55	1.92		154.527	82
1293	40.78	0.51	1.8		153.405	82
1294	40.93	0.48	1.71		152.256	83
1295	40.73	0.45	1.62		151.187	83
1296	40.85	0.43	1.55		150.246	83
1297	40.90	0.4	1.46		149.324	83
1298	40.89	0.38	1.38		148.354	83
1299	40.85	0.35	1.31		147.331	83
1300	40.92	0.34	1.25		146.615	83
1301	40.80	0.32	1.19		146.011	83
1302	40.97	0.31	1.15		145.361	83
1303	40.85	0.29	1.08		144.519	83
1304	41.01	0.28	1.05		143.546	83
1305	40.95	0.26	1.02		142.883	83
1306	40.89	0.25	0.98		142.076	83
1307	41.00	0.25	0.96		141.486	83
1308	40.93	0.24	0.95		140.829	83
1309	41.09	0.24	0.94		140.171	83
1310	40.82	0.24	0.92		139.686	83
1311	40.98	0.23	0.91		138.85	83
1312	40.99	0.23	0.9		138.018	83
1313	40.99	0.23	0.9		137.671	83
1314	41.10	0.23	0.9		137.023	83
1315	40.95	0.23	0.9		136.197	83
1316	40.92	0.23	0.89		135.777	83
1317	41.11	0.23	0.89		134.984	83
1318	41.15	0.23	0.91		134.246	83
1319	41.09	0.23	0.89		133.816	83
1320	41.04	0.23	0.9		133.062	83
1321	41.22	0.23	0.89		132.505	83
1322	41.16	0.23	0.91		132.251	83
1323	41.02	0.23	0.91		131.683	83

1324	41.10	0.24	0.93		131.323	83
1325	41.16	0.24	0.93		130.982	83
1326	41.17	0.24	0.95		131.361	83
1327	40.90	2.67	9.9		156.754	83
1328	40.92	1.56	7.23		149.298	83
1329	40.82	1.16	5.64		144.334	83
1330	40.71	1.15	5.51		141.063	83
1331	41.00	1.13	5.41		138.556	83
1332	40.77	1.04	5.04		136.756	83
1333	40.80	0.93	4.52		135.204	83
1334	40.80	0.82	4.01		133.957	83
1335	40.83	0.72	3.52		132.772	83
1336	40.74	0.64	3.11		131.418	83
1337	40.71	0.56	2.74		130.642	83
1338	40.62	0.49	2.44		130.047	83
1339	40.70	0.44	2.17		129.401	83
1340	40.90	0.39	1.95		128.853	83
1341	41.05	0.35	1.77		128.034	83
1342	40.68	0.32	1.62		127.529	83
1343	40.85	0.29	1.49		126.849	83
1344	40.91	0.27	1.39		125.996	83
1345	40.87	0.25	1.29		125.556	83
1346	40.85	0.23	1.21		125.067	83
1347	40.64	0.21	1.11		124.188	83
1348	40.80	0.2	1.05		124.38	83
1349	40.84	0.19	1.01		124.364	83
1350	40.85	0.18	0.96		124.109	83
1351	40.89	0.17	0.91		123.639	83
1352	40.90	0.16	0.87		123.826	83
1353	41.00	0.15	0.83		123.397	83
1354	40.82	0.15	0.8		123.446	83
1355	40.94	0.14	0.78		122.958	83
1356	40.96	0.14	0.76		122.798	83
1357	40.69	0.13	0.73		129.314	83
1358	40.88	0.8	4.66		145.431	83
1359	40.75	0.69	3.7		138.821	83
1360	40.68	0.48	2.68		134.515	83
1361	40.68	0.42	2.37		131.634	83
1362	40.86	0.4	2.29		129.543	83
1363	40.60	0.38	2.18		127.357	83
1364	40.68	0.35	2.1		125.953	83
1365	40.81	0.33	2.01		125.112	83

1366	40.89	0.31	1.94		124.652	83
1367	40.74	0.29	1.86		123.812	83
1368	40.70	0.27	1.76		123.637	83
1369	40.71	0.25	1.69		123.061	83
1370	40.75	0.24	1.61		122.448	83
1371	40.67	0.22	1.53		121.962	83
1372	40.76	0.21	1.47		121.623	83
1373	40.74	0.2	1.4		121.13	84
1374	40.83	0.18	1.32		120.652	84
1375	40.75	0.17	1.28		120.119	84
1376	40.76	0.17	1.22		119.757	83
1377	40.83	0.16	1.17		119.226	84
1378	40.81	0.15	1.13		119.443	83
1379	40.75	0.14	1.09		123.811	83
1380	40.63	0.48	4.29		148.513	83
1381	40.33	0.92	3.8		161.422	83
1382	40.05	1.78	5.47		173.106	83
1383	39.63	2.17	9.6		187.179	83
1384	39.01	1.5	15.3		202.68	83
1385	38.56	0.83	15.54		218.048	83
1386	38.08	0.64	14.94		229.861	83
1387	37.50	0.23	15.17		237.568	83
1388	37.01	0.07	15.38		243.577	83
1389	36.31	0.07	15.7		248.848	83
1390	35.86	0.07	15.84		252.856	84
1391	35.30	0.07	15.94		256.445	83
1392	34.50	0.08	15.85		259.164	83
1393	33.91	0.08	16		261.931	84
1394	33.14	0.09	16.07		264.101	84
1395	32.39	0.08	16.13		266.27	84
1396	31.79	0.09	16.1		268.385	84
1397	31.31	0.09	16.1		270.222	83
1398	30.44	0.08	16.04		271.438	84
1399	29.94	0.09	16.26		273.124	84
1400	28.98	0.09	16.46		274.914	84
1401	28.38	0.09	16.46		276.588	84
1402	27.94	0.09	16.31		277.767	84
1403	26.93	0.09	16.35		278.309	84
1404	26.39	0.08	16.39		277.596	84
1405	25.49	0.08	16.49		277.61	84
1406	25.13	0	1.05		276.301	84
1407	24.20	0	0.44		275.883	84

1408	23.65	0.07	16.1		275.911	84
1409	23.17	0.07	16.43		272.069	84
1410	22.85	0.04	13.74		250.409	84
1411	22.44	0.2	16.31		237.52	84
1412	22.39	2.15	15.27		229.387	84
1413	22.13	3.61	15.85		222.295	84
1414	21.84	1.01	12.6		215.922	84
1415	21.68	0.27	12.92		211.139	84
1416	21.64	0.13	11.46		207.227	84
1417	21.40	0.08	10.21		204.05	84
1418	21.54	0.09	9.55		201.555	84
1419	21.34	0.07	6.67		200.306	84
1420	21.24	0.7	7.18		198.46	84
1421	21.11	1.63	8.96		196.295	84
1422	21.07	2.14	9.44		193.92	84
1423	20.97	2.37	9.46		191.524	84
1424	21.06	2.37	8.98		189.19	84
1425	21.03	2.32	8.51		186.922	84
1426	20.93	2.21	7.91		184.717	84
1427	20.95	2.09	7.4		182.546	84
1428	20.91	1.93	6.77		180.541	84
1429	20.94	1.84	6.38		178.592	84
1430	21.00	1.73	5.95		176.675	84
1431	20.99	1.65	5.65		174.882	84
1432	20.90	1.52	5.25		173.037	84
1433	20.90	1.38	4.79		171.232	84
1434	20.87	1.31	4.53		169.493	84
1435	20.87	1.19	4.13		167.869	84
1436	20.99	1.09	3.82		166.331	84
1437	20.90	1	3.51		164.878	84
1438	20.97	0.92	3.25		163.402	84
1439	20.98	0.84	2.96		161.957	84
1440	20.88	0.77	2.72		160.532	84
1441	20.96	0.69	2.47		159.092	84
1442	20.93	0.64	2.31		157.837	84
1443	20.99	0.6	2.16		156.561	84
1444	20.99	0.55	2		155.364	84
1445	20.99	0.52	1.9		154.276	84
1446	20.94	0.5	1.81		153.218	84
1447	20.96	0.47	1.7		152.239	84
1448	20.95	0.45	1.63		151.289	84
1449	20.97	0.43	1.55		150.332	84

1450	21.15	0.41	1.48		149.239	84
1451	21.14	0.4	1.43		148.594	84
1452	21.25	0.38	1.39		147.707	84
1453	21.15	0.37	1.36		146.767	84
1454	20.97	0.36	1.31		145.839	84
1455	21.05	0.36	1.3		145.145	84
1456	21.12	0.35	1.27		144.384	84
1457	21.08	0.34	1.23		143.705	84
1458	21.08	0.34	1.24		143	84
1459	21.06	0.34	1.24		142.08	84
1460	21.25	0.34	1.24		141.612	84
1461	21.04	0.35	1.25		140.842	84
1462	21.05	0.35	1.27		139.834	84
1463	21.19	0.35	1.25		139.155	84
1464	21.15	0.35	1.28		138.615	84
1465	21.12	0.36	1.3		138.117	84
1466	21.16	0.37	1.33		137.35	84
1467	21.22	0.37	1.35		136.731	84
1468	21.40	0.38	1.37		136.007	84
1469	21.30	0.39	1.42		136.026	84
1470	21.20	0.39	1.43		135.739	84
1471	21.19	0.4	1.45		134.794	84
1472	21.20	0.41	1.48		134.425	84
1473	21.21	0.41	1.5		133.818	84
1474	21.23	0.41	1.5		133.129	84
1475	21.16	0.42	1.52		132.495	84
1476	21.11	0.43	1.59		132.211	84
1477	21.32	0.43	1.58		131.748	84
1478	21.28	0.43	1.59		131.654	84
1479	21.10	2.57	9.63		157.798	84
1480	20.96	1.35	6.75		149.76	84
1481	21.14	0.97	4.87		144.415	84
1482	21.02	0.94	4.72		140.87	84
1483	20.92	0.95	4.77		138.428	84
1484	21.00	0.91	4.57		136.747	84
1485	20.94	0.83	4.19		135.272	84
1486	21.01	0.74	3.74		133.821	84
1487	21.06	0.66	3.37		132.882	84
1488	20.99	0.59	3		131.927	84
1489	21.09	0.53	2.72		131.142	84
1490	21.15	0.48	2.47		130.608	84
1491	21.10	0.44	2.26		130.219	84

1492	20.96	0.4	2.08		129.603	84
1493	20.96	0.37	1.92		129.197	84
1494	21.09	0.34	1.76		128.316	84
1495	21.02	0.31	1.65		127.78	84
1496	21.00	0.29	1.55		127.511	84
1497	21.04	0.28	1.48		126.736	84
1498	21.10	0.26	1.39		126.429	84
1499	21.11	0.25	1.35		126.222	84
1500	21.02	0.24	1.31		125.846	84
1501	21.12	0.23	1.26		125.194	84
1502	21.00	0.22	1.22		124.76	84
1503	21.00	0.22	1.19		124.403	84
1504	21.07	0.21	1.19		124.454	84
1505	21.08	0.21	1.16		124.002	84
1506	21.11	0.2	1.13		123.305	84
1507	21.24	0.2	1.12		122.523	84
1508	21.11	0.2	1.11		122.843	84
1509	21.27	0.19	1.11		123.593	84
1510	21.16	0.85	5.29		145.471	84
1511	21.07	0.54	3.85		138.353	84
1512	21.19	0.38	2.71		134.159	84
1513	21.13	0.32	2.28		131.269	84
1514	21.14	0.31	2.15		129.054	84
1515	21.09	0.3	2.12		127.407	84
1516	21.14	0.29	2.07		126.389	84
1517	21.13	0.28	2.02		125.752	84
1518	21.08	0.26	1.97		124.482	84
1519	21.14	0.25	1.89		124.51	84
1520	21.01	0.24	1.86		123.393	84
1521	21.22	0.23	1.83		123.276	84
1522	20.96	0.23	1.8		122.876	84
1523	21.05	0.22	1.79		122.312	84
1524	21.01	0.21	1.75		121.937	84
1525	21.06	0.21	1.74		121.498	84
1526	21.02	0.2	1.74		121.197	84
1527	21.02	0.2	1.71		120.746	84
1528	21.05	0.19	1.67		120.629	84
1529	21.04	0.19	1.67		119.893	84
1530	21.07	0.19	1.67		121.114	84
1531	20.93	0.5	5.25		147.246	84
1532	20.70	1.7	5.14		162.874	84
1533	20.25	3.12	7.38		177.31	84

1534	19.67	2.45	12.76		191.765	84
1535	19.11	1.96	15.14		208.002	84
1536	18.63	1.09	14.92		221.318	84
1537	18.21	0.25	15.65		231.445	84
1538	17.66	0.12	15.39		237.876	84
1539	17.21	0.08	15.34		243.177	84
1540	16.77	0.1	15.39		247.39	84
1541	16.16	0.06	15.69		251.638	84
1542	15.64	0.08	15.99		255.538	84
1543	15.25	0.08	15.81		258.387	84
1544	14.47	0.08	15.7		260.757	84
1545	13.97	0.08	15.64		262.49	84
1546	13.47	0.09	15.73		264.367	84
1547	12.75	0.09	15.69		266.178	84
1548	12.29	0.09	15.6		267.864	84
1549	11.91	0.09	15.29		269.358	84
1550	11.20	0.09	15.28		270.847	84
1551	10.69	0.09	15.4		272.437	84
1552	10.01	0.1	15.4		273.877	84
1553	9.58	0.1	15.34		275.335	84
1554	8.90	0.1	15.42		276.792	84
1555	8.02	0.1	15.43		277.522	84
1556	7.78	0.1	15.33		278.157	84
1557	7.09	0.1	15.61		279.036	84
1558	6.45	0.1	15.6		280.487	84
1559	5.82	0.09	15.61		281.774	84
1560	5.79	0.11	11.96		258.324	84
1561	5.47	0.03	11.35		242.046	84
1562	5.51	0.08	10.4		233.985	84
1563	5.22	0.41	13.57		227.221	84
1564	5.00	0.3	12.09		220.227	84
1565	4.94	0.06	9.2		214.811	84
1566	4.84	0.04	8.19		210.407	84
1567	4.79	0.04	7.03		207.084	84
1568	4.72	0.05	6.63		203.636	84
1569	4.77	0.06	5.95		202.732	84
1570	4.55	0.16	3.99		201.044	84
1571	4.63	0.5	5.43		198.825	84
1572	4.60	0.88	6.68		196.449	84
1573	4.62	1.14	7.09		193.935	84
1574	4.39	1.27	7.13		191.605	84
1575	4.56	1.31	6.93		189.286	84

1576	4.57	1.31	6.71		187.008	84
1577	4.52	1.23	6.2		184.78	84
1578	4.42	1.15	5.74		182.619	84
1579	4.47	1.06	5.29		180.609	84
1580	4.47	0.95	4.8		178.594	84
1581	4.56	0.86	4.38		176.516	84
1582	4.53	0.77	3.97		174.74	84
1583	4.51	0.69	3.63		172.813	84
1584	4.64	0.61	3.22		171.109	84
1585	4.51	0.54	2.9		169.375	84
1586	4.79	0.47	2.59		167.611	84
1587	4.50	0.42	2.34		165.937	84
1588	4.56	0.37	2.09		164.36	84
1589	4.54	0.33	1.9		162.831	83
1590	4.55	0.29	1.74		161.491	84
1591	4.63	0.26	1.6		160.112	84
1592	4.71	0.24	1.49		158.765	84
1593	4.59	0.22	1.37		157.425	84
1594	4.62	0.2	1.26		156.219	84
1595	4.67	0.18	1.17		155.042	84
1596	4.42	0.17	1.09		153.967	84
1597	4.84	0.16	1.01		152.906	84
1598	4.75	0.15	0.94		151.831	84
1599	4.68	0.14	0.89		150.804	84
1600	4.72	0.13	0.83		149.917	84
1601	4.78	0.12	0.78		149.109	84
1602	4.64	0.12	0.74		148.14	84
1603	4.79	0.11	0.71		147.097	84
1604	4.76	0.11	0.67		146.398	84
1605	4.81	0.1	0.64		145.566	84
1606	4.78	0.1	0.62		144.603	84
1607	4.75	0.09	0.59		143.761	84
1608	4.73	0.09	0.58		143.07	84
1609	4.69	0.09	0.56		142.129	84
1610	4.82	0.09	0.54		141.668	83
1611	4.82	0.09	0.52		140.819	83
1612	4.83	0.08	0.5		140.047	83
1613	4.74	0.08	0.49		139.496	83
1614	4.76	0.08	0.49		138.848	83
1615	4.82	0.08	0.48		138.279	83
1616	4.89	0.08	0.48		137.94	83
1617	4.92	0.08	0.48		137.294	83

1618	4.93	0.08	0.47		136.858	83
1619	4.96	0.08	0.47		135.815	83
1620	4.97	0.08	0.47		134.966	83
1621	4.90	0.08	0.47		134.494	83
1622	4.91	0.08	0.46		134.338	83
1623	4.79	0.08	0.47		133.726	83
1624	5.06	0.08	0.46		133.201	83
1625	4.97	0.08	0.45		132.567	83
1626	4.94	0.08	0.45		131.898	83
1627	5.02	0.08	0.45		131.699	83
1628	5.13	0.08	0.45		130.927	83
1629	4.78	0.79	2.86		154.377	83
1630	4.92	1.95	8.5		149.2	83
1631	4.80	1.23	5.59		143.738	83
1632	4.92	1.01	4.72		140.166	83
1633	4.92	0.98	4.68		137.454	83
1634	4.80	0.95	4.64		135.577	83
1635	4.80	0.89	4.42		134.067	83
1636	4.80	0.81	4.11		132.97	83
1637	4.88	0.74	3.75		131.85	83
1638	4.67	0.67	3.39		131.095	83
1639	4.80	0.59	3.02		129.995	83
1640	4.94	0.53	2.73		129.422	83
1641	4.83	0.47	2.46		128.552	83
1642	4.80	0.42	2.22		128.428	83
1643	5.00	0.38	2.01		127.752	83
1644	4.79	0.35	1.83		127.666	83
1645	4.94	0.32	1.68		127.38	83
1646	4.80	0.29	1.56		126.685	83
1647	4.90	0.27	1.44		126.201	83
1648	4.95	0.24	1.33		125.827	83
1649	4.92	0.22	1.22		125.375	83
1650	4.84	0.21	1.13		124.727	83
1651	4.90	0.2	1.07		124.023	83
1652	4.95	0.18	0.99		123.815	83
1653	4.95	0.17	0.93		123.607	83
1654	5.03	0.16	0.87		123.383	83
1655	4.77	0.15	0.82		123.331	83
1656	5.02	0.14	0.76		122.707	83
1657	4.91	0.13	0.74		122.272	83
1658	4.81	0.13	0.71		122.283	83
1659	4.90	0.12	0.67		121.593	83

1660	4.96	0.7	3.75		144.775	83
1661	4.96	0.86	4.5		138.219	83
1662	4.93	0.63	3.3		133.349	83
1663	4.87	0.47	2.51		130.248	83
1664	4.84	0.41	2.21		128.173	83
1665	5.02	0.37	2.03		126.442	83
1666	4.96	0.35	1.95		125.76	83
1667	5.03	0.33	1.89		124.577	83
1668	4.98	0.31	1.81		123.417	83
1669	4.93	0.29	1.75		123.187	83
1670	4.90	0.27	1.67		122.751	83
1671	5.02	0.25	1.62		121.989	83
1672	4.97	0.24	1.54		121.788	83
1673	4.94	0.22	1.46		120.977	83
1674	4.94	0.21	1.39		119.994	83
1675	5.00	0.2	1.33		119.761	82
1676	5.00	0.23	1.71		140.205	82
1677	4.67	1.74	5.92		160.242	82
1678	4.21	4	8.49		175.75	82
1679	3.57	4.21	12.88		191.397	82
1680	3.21	2.74	13.76		206.366	82
1681	2.85	2.31	12.66		216.923	82
1682	2.36	1.43	13.54		225.219	83
1683	1.80	1.64	13.16		231.471	83
1684	1.50	1.76	12.79		235.671	82
1685	0.92	1.73	12.92		239.203	82
1686	0.71	1.71	12.75		241.556	83
1687	0.01	1.66	12.73		244.379	83

ASTM E2618 Wood Heater Run Sheets

Client: Central Boiler Project Number: 0117WB Run Number: 3
Model: Edge 760 Tracking Number: 2383 Date: 8/13/19
Test Crew: DWAus
OMNI Equipment ID numbers:

Wood Heater Supplemental Data

Start Time: 16:55 Booth #:
Stop Time: 28.117 hours

Stack Gas Leak Check:
Initial: good Final: good

Sample Train Leak Check:
A: 0.0 @ 11 "Hg
B: 0.0 @ 9 "Hg

Calibrations: Span Gas CO_2: 17.08 CO: 4.29

	Pre Test		Post Test	
	Zero	Span	Zero	Span
Time	1612	1612	8/14 2106	8/14 2106
CO_2	-0.00	17.03	0.16	17.27
CO	-0.00	4.28	0.00	4.32

Air Velocity (ft/min): Initial: <50 Final: <50
Scale Audit (lbs): Initial: 10.0 Final: 10.0
Pitot Tube Leak Test: Initial: good Final: good
Stack Diameter (in): 8"
Induced Draft: 0.0
% Smoke Capture: 100%
Flue Pipe Cleaned Prior to First Test in Series:
Date: 8/7/19 Initials: AR

	Initial	Middle	Ending
P_b (in/Hg)	30.04		30.14
RH (%)	35		37
Ambient (°F)	84		83

Tunnel Traverse

Microtector Reading	dP (in H_2O)	T(°F)
1	.008	90
2	.014	90
3	.015	90
4	.017	90
5	.015	90
6	.016	90
1	.014	90
2	.016	90
3	.015	90
4	.016	90
5	.015	90
6	.012	90
Center:		
	.017	90

Background Filter Volume: 379.133

Tunnel Static Pressure (in H_2O):	
Beginning of Test	End of Test
-.164	-.166

Technician Signature: DWAus Date: 10/28/19

OMNI-Test Laboratories, Inc.

ASTM E2618 Wood Heater Run Sheets

Client: Central Boiler Project Number: 0117WB Run Number: 3
Model: Edge 760 Tracking Number: 2383 Date: 8/13/19
Test Crew: B Davis
OMNI Equipment ID numbers:

Wood Heater Run Notes

Air Control Settings

Primary:

Automatic

Secondary: Fixed

Tertiary/Pilot: N/A

Fan: Automatic.

Preburn Notes

Time	Notes
Ø	Burned at maximum BTU draw Burning ≈ 160 lbs of preburn fuel. Then set to CAT II Heat draw ≈ 54,000 BTU

Test Notes

Sketch test fuel configuration:

See photo

Start up procedures & Timeline:

Bypass: Not used
Fuel loaded by: 2 min
Door closed at: 2.5 min
Primary air: Auto

Notes: N/A

Time	Notes
50	Changed front filters for test A
13:23	changed front filters

Technician Signature: B Davis Date: 10/28/19

Run 4

Hydronic Heating Appliances - Test Method ASTM 2618
Results

Manufacturer:	Central Boiler
Model:	Edge 760
Tracking No.:	2383
Project No.:	0117WB000E
Run:	4
Test Date:	August 27, 2019

Burn Rate	**2.19**	**kg/hr dry**
Average Tunnel Temperature	89	degrees F
Average Gas Velocity in Dilution Tunnel - vs	8.2	feet/second
Average Gas Flow Rate in Dilution Tunnel - Qsd	21821	dscf/hour
Average Delta p	0.014	inches H20
Average Delta H	1.32	inches H20
Total Time of Test	2817	minutes

PARTICULATE EMISSIONS RESULTS

First Hour:	**-0.02**	g/hr
	0.00	g/kg
	0.00	lb/mmBTU output
Complete Run:	**1.75**	g/hr
	0.80	g/kg
	0.11	lb/mmBTU output

	SAMPLE TRAIN 1		SAMPLE TRAIN 2		AMBIENT SAMPLE TRAIN	
Total Sample Volume - Vm	458.64	cubic feet	464.77	cubic feet	598.50	cubic feet
Average Gas Meter Temperature	96	degrees F	95	degrees F	82	degrees F
Total Sample Volume (Standard Conditions) - Vmstd	432.0	dscf	436.8	dscf	581.9	dscf
Total Particulates - mn	35.8	mg	34.8	mg	0.6	mg
Particulate Concentration (dry-standard)	0.000083	grams/dscf	0.000080	grams/dscf	0.000001	grams/dscf
Particulate Emissions	83.84	grams	80.57	grams		
Difference from Average	1.64	grams	1.64	grams		

Results Are Acceptable

	AVERAGE	
Total Sample Volume - Vm	461.70	cubic feet
Average Gas Meter Temperature	95	degrees F
Total Sample Volume (Standard Conditions) - Vmstd	434.4	dscf
Particulate Concentration (dry-standard)	0.00008	grams/dscf
Particulate Emissions	82.21	grams
7.5% of the average particulate emissions	6.17	grams

ADDITIONAL ACCEPTANCE CRITERIA

Boiler Water Return Temperature >120 °F	**Acceptable**
Proportional Rate Variation >80%	**Acceptable**
90% of PR Values between 90-110%	**Acceptable**

	SAMPLE TRAIN 1 - FIRST HOUR	
Total Sample Volume - Vm	9.64	cubic feet
Average Gas Meter Temperature	95	degrees F
Total Sample Volume (Standard Conditions) - Vmstd	9.08	dscf
Total Particulates - mn	0	mg
Particulate Concentration (dry-standard)	0.00000	grams/dscf
Particulate Emissions	-0.02	grams
Burn Rate	5.63	(dry kg/hr)
Heat Output Rate	34349	BTU/hr

Hydronic Heating Appliances - Test Method ASTM 2618
Results

Manufacturer:	Central Boiler	Equipment Numbers:	
Model:	Edge 760		
Tracking No.:	2383		
Project No.:	0117WB000E		
Run #:	4		
Date:	8/27/19		

TRAIN 1 (First Hour emissions)

Sample Component	Reagent	Filter, Probe or Dish #	Weights		
			Final, mg	Tare, mg	Particulate, mg
B. Front filter catch	Filter	D886	117.2	117.2	0.0
C. Rear filter catch	Filter				0.0
D. Probe catch*	Probe				0.0
E. Filter seals catch*	Seals				0.0

Sub-Total	Total Particulate, mg:	0.0

TRAIN 1 (Post First Hour Change-out)

Sample Component	Reagent	Filter, Probe or Dish #	Weights		
			Final, mg	Tare, mg	Particulate, mg
B. Front filter catch	Filter	D887,D893	267.1	235.0	32.1
C. Rear filter catch	Filter	D888	117.9	117.4	0.5
D. Probe catch*	Probe	27	114275.9	114273.7	2.2
E. Filter seals catch*	Seals	R857	4071.0	4070.0	1.0

Sub-Total	Total Particulate, mg:	35.8
Train 1 Aggregate	Total Particulate, mg:	**35.8**

TRAIN 2

Sample Component	Reagent	Filter, Probe or Dish #	Weights		
			Final, mg	Tare, mg	Particulate, mg
A. Front filter catch	Filter	D889, D892	268.6	237.8	30.8
B. Rear filter catch	Filter	D890	118.5	118.4	0.1
C. Probe catch*	Probe	28	114752.8	114750.2	2.6
D. Filter seals catch*	Seals	R858	3292.1	3290.8	1.3

Total Particulate, mg:	34.8

AMBIENT

Sample Component	Reagent	Filter # or Probe #	Weights		
			Final, mg	Tare, mg	Particulate, mg
A. Front filter catch*	Filter	D891	118.9	118.3	0.6

Total Particulate, mg:	0.6

*Particulate catch that results in a negative number, is assumed to be zero for probes and seals, negative numbers for filters are assumed to be part of the seal weight.

Component	Equations:
A. Front filter catch	Final (mg) - Tare (mg) = Particulate, mg
B. Rear filter catch	Final (mg) - Tare (mg) = Particulate, mg
C. Probe catch	Final (mg) - Tare (mg) = Particulate, mg

Hydronic Heating Appliances - Test Method ASTM 2618
Fuel Moisture

Manufacturer:	Central Boiler
Model:	Edge 760
Tracking No.:	2383
Project No.:	0117WB000E
Technician:	Central Boiler
Run #:	4
Test Date:	August 27, 2019

Wet Weight (lb)	% Moisture				
12.5	20.3	18.7	18.8	18.2	21
10.6	22.3	22.6	19.3	19.8	22.1
10.2	18.7	18.9	19	19.2	19
11.5	21.3	20.9	18.2	18.6	18.4
12	21.4	22.3	18.7	20.3	19.3
10.7	19.7	20	19.1	21.4	18.1
11.6	22.7	21.9	23.8	22.3	18.3
11.3	24.2	23.8	23.8	22.1	21.6
12.1	18.6	18.7	20	19	18.9
10.7	19.8	21.5	22.6	23.8	25.5
11.2	28.2	25.3	24.9	20	22.8
10.4	25.8	23.3	27.7	25.8	24.8
10.4	19.6	18.7	20.4	19.6	18.9
9.8	19.1	18.9	18.6	20.2	18.8
12.1	18.2	18.3	19.7	20.9	18.6
11.0	22.4	23.1	23.8	22.4	22.2
11.0	18.4	18.2	24.2	21.7	19.4
10.5	18.6	18.9	19.0	18.8	19.3
10.4	18.7	19.3	19.1	18.5	19.5
11.3	19.3	18.8	19.1	22.0	20.3
11.0	21.9	21.6	20.0	18.8	19.9
12.0	25.5	25.5	26.9	25.9	28.1
9.3	19.7	19.3	19.0	18.2	19.4
8.9	21.7	18.2	21.9	19.3	20.2
10.8	20.6	20.3	18.9	19.1	19.3

Total Weight of Load (lb): 273.3

Total Moisture of Load (%): 20.8

Equipment Numbers:

Run: 4

Manufacturer: Central Boiler
Model: Edge 760
Tracking No.: 2383
Project No.: 0117WB000E
Test Date: August 27, 2019
Technician: Central Boiler
Beginning Clock Time: 19:37
Recording Interval: 1 min.
Total Sampling Time: 2817 min.

Velocity Traverse Data

	Pt.1	Pt.2	Pt.3	Pt.4	Pt.5	Pt.6	Pt.7	Pt.8	Pt.9	Pt.10	Pt.11	Pt.12	Center	
Initial dP	0.014	0.016	0.015	0.015	0.014	0.016	0.011	0.015	0.014	0.015	0.016	0.016	0.014	"H2O
Initial Temp.	90	90	90	90	90	90	90	90	90	90	90	90	90	

Air Velocity: Initial: <50 Final: <50
Scale Audit: Pre: 10.0 Post: 10.0
Pitot Tube Leak Test: Pre: 0 Post: 0
Flue Pipe Cleaned Prior to First Test in Series: Date: 8/5/2019

Induced Draft: 0
% Smoke Capture: 100

V_{strav} 8.23 ft/sec
V_{scent} 8.03 ft/sec
F_p 1.025

PM Control Module: 335, 336
Dilution Tunnel MW(dry): 29.00 lb/lb-mole
Dilution Tunnel MW(wet): 28.78 lb/lb-mole
Dilution Tunnel H2O: 2.00 percent
Dilution Tunnel Static: -0.158 "H2O
Pitot Tube Cp: 0.99

	(1)	(2)	(amb)
Meter Box Y Factor:	0.992	0.989	1.001

Barometric Pressure:	Begin	Middle	End	Average
	29.75	29.78	29.93	29.82 "Hg

Tunnel Velocity: 8.23 ft/sec.
Intial Tunnel Flow: 362.9 scfm
Average Tunnel Flow: 363.7 scfm
Tunnel Area: 0.785 ft2
Post-Test Leak Check (1): 0.000 cfm @ 12 in. Hg
Post-Test Leak Check (2): 0.000 cfm @ 10 in. Hg
Fuel Moisture (dry basis %): 20.8
Total Particulate (1): 35.8
Total Particulate (2): 34.8

Elapsed Time	Gas Meter Cubic Feet (1)	Gas Meter Cubic Feet (2)	Gas Meter Cubic Feet (amb)	Sample Rate, cfm (1)	Sample Rate, cfm (2)	Orifice dH (1)	Orifice dH (2)	Orifice dH (amb)	Meter oF (1)	Meter oF (2)	Meter oF (amb)	Meter Vac. In. Hg. (1)	Meter Vac. In. Hg. (2)	Dilution Tunnel Temp.	Dilution Tunnel dP	Pro. Rate (%) (1)	Pro. Rate (%) (2)	Scale Reading	Weight Change	Load Side Liquid Flow Rate	Boiler Side Liquid Flow Rate (optional)	Thermopile ΔT	Boiler to Heat Exch. Temp.	Heat Exch to Boiler Temp.	Inlet Load Temp.	Outlet Load Temp.	Stack	Filter (1)	Filter (2)	Ambient		Specific Heat of Inlet Water (BTU/lb-*F)	Mass Flow Rate of Inlet Water (lb/min)	Heat Output, Btu
	Particulate Sampling Data																	Fuel Weight, lb		Flow, gpm		Temperature Data, oF												
0	0.000	0.000	0.000			0.80	0.56	0.26	91	91	85	1.90	0.00	109	0.014			273.3		0.77	15.4	91.7	168.7	165.0	76.4	168.1	220	86	86	85				
1	0.157	0.152		0.16	0.15	1.33	1.12	0.26	91	91	85	2.00	0.00	103	0.014	99	94	272.6	0.70	0.72	15.5	92.8	169.7	166.0	76.5	169.3	207	87	86	85		1.001	5.943	552
2	0.319	0.319		0.16	0.17	1.32	1.12	0.26	91	91	85	1.98	0.00	100	0.015	98	100	271.2	1.40	0.70	15.4	93.3	170.3	166.6	76.6	169.9	200	87	87	85		1.001	5.786	540
3	0.481	0.484		0.16	0.17	1.31	1.08	0.26	91	91	85	2.02	0.00	107	0.013	106	106	270.3	0.87	0.71	15.5	93.5	170.5	166.9	76.7	170.2	215	87	87	85		1.001	5.931	555
4	0.642	0.648		0.16	0.16	1.30	1.09	0.26	91	91	85	2.03	0.00	114	0.016	96	96	269.3	1.02	0.66	15.5	93.5	170.6	167.0	76.8	170.4	234	88	88	85		1.001	5.460	511
5	0.803	0.812		0.16	0.16	1.31	1.09	0.26	92	91	85	2.02	0.00	118	0.015	99	99	268.4	0.96	0.67	15.4	93.6	171.1	167.4	76.9	170.6	247	88	88	85		1.001	5.538	519
6	0.963	0.975		0.16	0.16	1.31	1.09	0.26	92	91	85	2.01	0.00	120	0.013	106	106	267.6	0.79	0.70	15.4	94.8	172.1	168.4	76.8	171.7	255	87	87	85		1.001	5.806	551
7	1.123	1.139		0.16	0.16	1.31	1.09	0.26	92	91	85	2.02	0.00	121	0.014	102	103	266.5	1.11	0.70	15.4	95.9	173.3	169.5	76.9	172.7	258	87	85	85		1.001	5.784	555
8	1.283	1.303		0.16	0.16	1.30	1.09	0.26	92	91	85	2.01	0.00	122	0.015	99	100	265.6	0.88	0.72	15.4	97.0	174.4	170.6	76.9	173.8	261	86	84	85		1.001	5.944	577
9	1.443	1.466		0.16	0.16	1.30	1.09	0.26	92	91	85	2.01	0.00	123	0.014	102	103	264.8	0.79	0.70	15.5	97.9	175.4	171.5	76.9	174.8	264	86	84	85		1.001	5.783	567
10	1.603	1.629		0.16	0.16	1.29	1.09	0.26	92	92	85	2.02	0.00	122	0.014	102	102	264.4	0.41	0.70	15.4	98.9	176.4	172.5	77.0	175.8	264	86	83	85		1.001	5.781	572
11	1.762	1.792		0.16	0.16	1.30	1.09	0.26	92	92	85	2.01	0.00	124	0.015	98	99	263.4	0.99	0.72	15.5	99.8	177.4	173.5	77.0	176.9	264	86	83	85		1.001	5.945	594
12	1.922	1.955		0.16	0.16	1.30	1.08	0.26	92	92	85	2.01	0.00	123	0.015	99	99	262.1	1.25	0.70	15.5	100.9	178.4	174.4	77.0	177.9	266	87	83	85		1.001	5.783	584
13	2.081	2.120		0.16	0.17	1.30	1.08	0.26	92	92	85	2.00	0.00	124	0.014	102	104	261.6	0.58	0.71	15.4	101.9	179.5	175.4	77.0	178.9	269	87	84	85		1.001	5.938	606
14	2.241	2.282		0.16	0.16	1.30	1.08	0.26	92	92	85	2.01	0.00	124	0.015	99	98	260.6	0.91	0.68	15.5	102.8	180.5	176.4	77.0	179.9	268	88	85	85		1.001	5.621	579
15	2.401	2.445		0.16	0.16	1.29	1.08	0.26	93	92	85	2.01	0.00	125	0.014	102	103	260.4	0.23	0.69	15.5	104.0	181.5	177.3	77.0	181.0	270	89	86	85		1.001	5.708	594
16	2.560	2.607		0.16	0.16	1.30	1.08	0.26	93	92	85	2.01	0.00	126	0.014	102	102	259.4	1.05	0.68	15.5	105.0	182.6	178.5	77.0	182.0	270	89	86	85		1.001	5.674	596
17	2.720	2.771		0.16	0.16	1.30	1.09	0.26	93	93	85	2.00	0.00	114	0.016	95	96	259.0	0.33	0.69	15.5	106.1	183.6	179.4	77.0	183.1	250	89	86	85		1.001	5.773	613
18	2.881	2.935		0.16	0.16	1.29	1.08	0.26	93	93	85	1.98	0.00	104	0.014	101	101	258.7	0.37	0.68	15.5	106.6	184.1	179.9	77.0	183.7	235	88	86	85		1.001	5.619	600
19	3.041	3.099		0.16	0.16	1.30	1.08	0.26	93	93	85	1.97	0.00	100	0.012	108	109	258.6	0.07	0.70	15.4	107.0	184.3	180.2	77.0	184.0	227	87	85	85		1.001	5.780	619
20	3.202	3.263		0.16	0.16	1.29	1.08	0.26	93	93	85	1.96	0.00	98	0.015	97	97	258.5	0.10	0.68	15.4	107.0	184.4	180.4	77.0	184.0	221	87	85	85		1.001	5.619	602
21	3.362	3.427		0.16	0.16	1.29	1.08	0.26	94	93	85	1.99	0.00	97	0.015	96	97	258.5	0.01	0.68	15.6	107.2	184.5	180.6	77.0	184.2	214	87	85	85		1.001	5.617	603
22	3.522	3.591		0.16	0.16	1.29	1.08	0.26	94	93	86	1.98	0.00	96	0.013	103	104	258.3	0.17	0.68	15.4	107.3	184.5	180.6	76.9	184.2	209	88	85	86		1.001	5.613	603
23	3.683	3.755		0.16	0.16	1.29	1.08	0.26	94	93	85	1.98	0.00	96	0.015	97	97	258.3	0.01	0.66	15.3	107.3	184.6	180.7	77.0	184.3	205	88	85	85		1.001	5.458	586
24	3.843	3.920		0.16	0.17	1.28	1.08	0.26	94	94	85	1.97	0.00	95	0.013	103	105	258.4	-0.03	0.68	15.4	107.4	184.6	180.7	76.9	184.3	202	88	86	85		1.001	5.650	608
25	4.004	4.085		0.16	0.17	1.28	1.08	0.26	94	94	85	1.96	0.00	95	0.014	100	101	258.3	0.07	0.66	15.5	107.4	184.6	180.7	77.0	184.4	198	87	86	85		1.001	5.457	587
26	4.164	4.249		0.16	0.16	1.29	1.08	0.26	94	94	85	1.98	0.00	94	0.015	96	97	258.2	0.05	0.66	15.4	107.3	184.6	180.7	77.1	184.4	198	85	86	85		1.001	5.459	586
27	4.325	4.413		0.16	0.16	1.29	1.08	0.26	94	94	85	1.97	0.00	93	0.015	96	97	258.2	-0.01	0.56	15.4	107.3	184.6	181.0	77.0	184.3	196	84	86	85		1.001	4.645	499
28	4.485	4.577		0.16	0.16	1.29	1.08	0.26	95	94	85	1.96	0.00	93	0.015	96	97	258.3	-0.05	0.70	15.4	107.3	184.7	180.4	77.0	184.3	194	84	87	85		1.001	5.780	621
29	4.646	4.741		0.16	0.16	1.29	1.08	0.26	95	94	85	1.98	0.00	93	0.015	96	97	258.3	0.04	0.73	15.5	107.4	184.6	180.4	76.9	184.4	192	83	87	85		1.001	6.105	657
30	4.807	4.906		0.16	0.17	1.29	1.08	0.26	95	95	86	1.98	0.00	93	0.016	93	94	258.2	0.10	0.68	15.5	107.4	184.6	180.6	77.0	184.4	190	83	87	86		1.001	5.619	604
31	4.968	5.071		0.16	0.17	1.28	1.08	0.26	95	95	86	1.96	0.00	92	0.015	96	97	258.1	0.02	0.39	15.4	107.4	184.6	182.4	76.9	184.3	187	83	87	86		1.001	3.200	344
32	5.129	5.236		0.16	0.17	1.29	1.08	0.26	95	95	85	1.96	0.00	92	0.014	99	100	258.2	-0.06	0.68	15.4	107.4	184.6	180.5	76.8	184.3	185	82	87	85		1.001	5.620	605
33	5.290	5.400		0.16	0.16	1.29	1.08	0.26	95	95	86	1.98	0.00	92	0.014	99	100	258.1	0.11	0.68	15.4	107.4	184.6	180.4	76.9	184.3	183	83	87	86		1.001	5.630	605
34	5.450	5.564		0.16	0.16	1.29	1.07	0.26	95	95	86	1.97	0.00	92	0.014	99	100	258.1	-0.07	0.66	15.5	107.4	184.5	180.4	76.9	184.3	181	83	87	86		1.001	5.458	587
35	5.611	5.729		0.16	0.17	1.29	1.08	0.26	96	95	86	1.97	0.00	92	0.014	99	100	258.2	-0.08	0.05	15.4	107.5	184.5	181.4	76.7	184.3	179	84	87	86		1.001	0.399	43
36	5.772	5.893		0.16	0.16	1.29	1.08	0.26	96	95	86	1.98	0.00	92	0.013	103	104	258.1	0.10	0.58	15.4	107.4	184.5	181.1	76.9	184.2	177	84	87	86		1.001	4.853	522
37	5.933	6.058		0.16	0.17	1.29	1.08	0.26	96	96	86	1.98	0.00	92	0.014	99	100	258.2	-0.07	0.64	15.5	107.4	184.5	181.0	76.8	184.2	175	84	87	86		1.001	5.294	569
38	6.094	6.223		0.16	0.17	1.29	1.08	0.26	96	96	86	1.97	0.00	92	0.015	96	97	258.2	0.01	0.64	15.4	107.4	184.4	181.0	76.8	184.2	173	85	87	86		1.001	5.297	570
39	6.255	6.388		0.16	0.17	1.29	1.08	0.26	96	96	86	1.98	0.00	92	0.014	99	100	258.2	-0.04	0.56	15.4	107.3	184.4	180.9	76.8	184.1	171	85	87	86		1.001	4.644	499
40	6.416	6.552		0.16	0.16	1.29	1.08	0.26	96	96	86	1.98	0.00	92	0.013	103	103	258.2	0.00	0.60	15.5	107.2	184.3	181.0	76.9	184.1	170	85	87	86		1.001	4.970	534
41	6.577	6.717		0.16	0.17	1.29	1.07	0.26	97	96	86	1.98	0.00	92	0.015	96	97	258.3	-0.02	0.58	15.4	107.2	184.3	181.0	76.9	184.1	168	86	87	86		1.001	4.808	516
42	6.738	6.881		0.16	0.16	1.29	1.08	0.26	97	96	86	1.97	0.00	92	0.013	103	103	258.2	0.02	0.62	15.5	107.1	184.3	180.9	76.9	184.0	167	86	87	86		1.001	5.133	550
43	6.899	7.046		0.16	0.17	1.29	1.08	0.26	97	96	86	1.96	0.00	92	0.014	99	100	258.1	0.10	0.66	15.4	107.0	184.2	180.6	76.9	183.9	165	86	87	86		1.001	5.456	585
44	7.061	7.211		0.16	0.17	1.29	1.08	0.26	97	96	86	1.97	0.00	92	0.014	100	100	258.2	-0.02	0.58	15.4	107.0	184.2	180.5	76.9	183.9	164	86	88	86		1.001	4.809	515
45	7.222	7.376		0.16	0.17	1.29	1.08	0.26	97	97	86	1.97	0.00	92	0.014	99	100	258.3	-0.10	0.67	15.5	106.8	184.1	180.5	77.1	183.8	162	86	88	86		1.001	5.541	592
46	7.383	7.541		0.16	0.17	1.29	1.08	0.26	97	97	86	1.97	0.00	92	0.013	103	104	258.1	0.14	0.59	15.4	106.8	184.0	180.5	77.0	183.8	161	86	88	86		1.001	4.865	520
47	7.545	7.706		0.16	0.17	1.29	1.08	0.26	97	97	86	1.97	0.00	91	0.014	100	100	258.1	-0.01	0.62	15.4	106.7	184.0	180.4	77.0	183.7	160	86	88	86		1.001	5.130	548
48	7.706	7.871		0.16	0.17	1.29	1.08	0.26	97	97	86	1.97	0.00	91	0.015	96	97	258.3	-0.13	0.62	15.5	106.7	183.9	180.3	77.0	183.7	159	87	88	86		1.001	5.126	547
49	7.867	8.036		0.16	0.16	1.29	1.07	0.26	97	97	86	1.98	0.00	91	0.014	99	100	258.2	0.05	0.66	15.4	106.6	183.8	180.2	77.0	183.6	157	87	88	86		1.001	5.456	582
50	8.029	8.201		0.16	0.17	1.29	1.08	0.26	97	97	85	1.98	0.00	91	0.014	100	100	258.3	-0.08	0.62	15.5	106.4	183.7	180.2	77.1	183.5	156	87	88	85		1.001	5.129	546
51	8.190	8.365		0.16	0.16	1.29	1.08	0.26	98	97	85	1.98	0.00	91	0.013	103	103	258.4	-0.12	0.68	15.3	106.3	183.6	180.1	77.1	183.4	155	87	88	85		1.001	5.616	598
52	8.351	8.530		0.16	0.16	1.29	1.08	0.26	98	97	86	1.98	0.00	91	0.015	95	97	258.3	0.13	0.66	15.5	106.2	183.5	179.9	77.1	183.3	154	87	88	86		1.001	5.454	580

Elapsed Time	Particulate Sampling Data																	Fuel Weight, lb		Flow, gpm		Temperature Data, oF													
	Gas Meter Cubic Feet (1)	Gas Meter Cubic Feet (2)	Gas Meter Cubic Feet (amb)	Sample Rate, cfm (1)	Sample Rate, cfm (2)	Orifice dH (1)	Orifice dH (2)	Orifice dH (amb)	Meter oF (1)	Meter oF (2)	Meter oF (amb)	Meter Vac. In. Hg. (1)	Meter Vac. In. Hg. (2)	Dilution Tunnel Temp.	Dilution Tunnel dP	Pro. Rate (%) (1)	Pro. Rate (%) (2)	Scale Reading	Weight Change	Load Side Liquid Flow Rate	Boiler Side Liquid Flow Rate (optional)	Thermopile ΔT	Boiler to Heat Exch. Temp.	Heat Exch to Boiler Temp.	Inlet Load Temp.	Outlet Load Temp.	Stack	Filter (1)	Filter (2)	Ambient		Specific Heat of Inlet Water (BTU/lb-°F)	Mass Flow Rate of Inlet Water (lb/min)	Heat Output, Btu
53	8.513	8.695		0.16	0.17	1.29	1.08	0.26	98	97	86	1.97	0.00	91	0.015	96	97	258.3	-0.04	0.62	15.4	106.1	183.5	179.9	77.1	183.2	153	87	88	86		1.001	5.128	545
54	8.674	8.860		0.16	0.16	1.29	1.08	0.26	98	98	86	1.97	0.00	91	0.015	95	96	258.2	0.09	0.60	15.5	106.0	183.4	179.8	77.2	183.2	153	87	88	86		1.001	4.965	527
55	8.835	9.026		0.16	0.17	1.29	1.08	0.26	98	98	86	1.98	0.00	91	0.014	99	100	258.2	0.05	0.62	15.4	105.9	183.3	179.8	77.2	183.1	151	87	88	86		1.001	5.126	543
56	8.997	9.191		0.16	0.17	1.28	1.08	0.26	98	98	86	1.97	0.00	91	0.013	103	104	258.2	-0.02	0.63	15.5	105.7	183.2	179.7	77.2	183.0	151	87	88	86		1.001	5.263	557
57	9.158	9.356		0.16	0.16	1.28	1.08	0.26	98	98	86	1.98	0.00	91	0.014	99	100	258.4	-0.18	0.64	15.4	105.6	183.1	179.6	77.3	182.9	150	87	88	86		1.001	5.294	560
58	9.320	9.521		0.16	0.17	1.28	1.08	0.26	98	98	86	1.97	0.00	91	0.014	99	100	258.4	-0.02	0.62	15.5	105.6	183.0	179.5	77.2	182.8	149	87	88	86		1.001	5.130	542
59	9.481	9.686		0.16	0.16	1.29	1.08	0.26	98	98	86	1.97	0.00	91	0.015	95	96	258.4	0.03	0.64	15.5	105.4	183.0	179.4	77.3	182.7	148	87	88	86		1.001	5.293	559
60	9.642	9.851		0.16	0.17	1.29	1.08	0.26	98	98	85	1.98	0.00	91	0.014	99	100	258.3	0.05	0.64	15.5	105.3	182.9	179.4	77.3	182.6	147	87	88	85		1.001	5.290	558
61	9.804	10.016		0.16	0.16	1.29	1.08	0.26	98	98	86	1.97	0.00	91	0.015	96	96	258.3	-0.01	0.64	15.4	105.1	182.7	179.2	77.4	182.5	147	87	88	86		1.001	5.291	557
62	9.966	10.181		0.16	0.16	1.29	1.08	0.26	99	98	86	1.98	0.00	91	0.013	103	104	258.2	0.09	0.66	15.4	104.9	182.6	179.1	77.5	182.4	146	88	88	86		1.001	5.454	573
63	10.128	10.347		0.16	0.17	1.36	1.08	0.26	99	98	86	1.83	0.00	91	0.014	99	100	258.3	-0.10	0.62	15.5	104.9	182.5	179.0	77.5	182.3	145	87	88	86		1.001	5.130	539
64	10.293	10.513		0.16	0.17	1.31	1.08	0.26	99	98	86	1.96	0.00	91	0.014	101	100	258.3	0.06	0.62	15.5	104.8	182.4	179.0	77.5	182.2	145	88	88	86		1.001	5.135	538
65	10.454	10.678		0.16	0.17	1.30	1.08	0.26	99	98	86	1.96	0.00	91	0.014	99	100	258.4	-0.15	0.62	15.4	104.6	182.4	178.8	77.5	182.1	144	88	88	86		1.001	5.133	538
66	10.616	10.843		0.16	0.16	1.29	1.08	0.26	99	98	86	1.96	0.00	91	0.014	99	100	258.2	0.19	0.64	15.4	104.5	182.3	178.8	77.6	182.0	143	89	88	86		1.001	5.296	554
67	10.778	11.008		0.16	0.16	1.29	1.08	0.26	99	98	86	1.96	0.00	91	0.013	103	104	258.3	-0.10	0.64	15.4	104.4	182.1	178.6	77.5	181.9	143	89	88	86		1.001	5.290	553
68	10.940	11.173		0.16	0.17	1.30	1.08	0.26	99	99	86	1.96	0.00	91	0.014	99	100	258.4	-0.04	0.64	15.4	104.3	182.0	178.5	77.5	181.8	142	89	88	86		1.001	5.292	553
69	11.102	11.338		0.16	0.16	1.30	1.08	0.26	99	99	86	1.96	0.00	91	0.014	99	100	258.4	-0.06	0.62	15.5	104.2	182.0	178.5	77.5	181.7	142	89	88	86		1.001	5.129	535
70	11.264	11.504		0.16	0.17	1.30	1.08	0.26	99	99	86	1.97	0.00	91	0.014	99	100	258.2	0.26	0.62	15.3	104.0	181.8	178.3	77.6	181.6	141	89	88	86		1.001	5.130	534
71	11.426	11.669		0.16	0.17	1.30	1.08	0.26	99	99	85	1.96	0.00	91	0.013	103	103	258.4	-0.27	0.62	15.5	103.9	181.7	178.2	77.6	181.5	140	88	88	85		1.001	5.130	533
72	11.588	11.834		0.16	0.16	1.30	1.09	0.26	99	99	86	1.96	0.00	91	0.015	96	96	258.4	0.05	0.62	15.6	103.8	181.6	178.2	77.6	181.4	140	88	88	86		1.001	5.128	533
73	11.750	12.000		0.16	0.17	1.29	1.08	0.26	99	99	86	1.97	0.00	91	0.014	99	100	258.3	0.10	0.64	15.4	103.7	181.5	178.0	77.5	181.3	139	88	88	86		1.001	5.291	549
74	11.912	12.166		0.16	0.17	1.30	1.08	0.26	99	99	86	1.97	0.00	91	0.014	99	100	258.4	-0.10	0.62	15.5	103.5	181.4	178.0	77.7	181.1	139	88	88	86		1.001	5.129	531
75	12.074	12.331		0.16	0.16	1.29	1.08	0.26	99	99	86	1.96	0.00	90	0.013	103	103	258.5	-0.10	0.62	15.5	103.5	181.2	177.8	77.5	181.0	138	88	88	86		1.001	5.131	532
76	12.236	12.496		0.16	0.17	1.30	1.08	0.26	99	99	86	1.97	0.00	90	0.013	103	103	258.4	0.10	0.64	15.5	103.3	181.2	177.5	77.6	180.9	137	88	88	86		1.001	5.291	547
77	12.398	12.661		0.16	0.16	1.30	1.08	0.26	99	99	86	1.96	0.00	90	0.014	99	100	258.3	0.05	0.64	15.5	103.2	181.0	177.4	77.6	180.8	136	88	88	86		1.001	5.293	547
78	12.560	12.827		0.16	0.17	1.29	1.08	0.26	99	99	86	1.96	0.00	90	0.013	103	104	258.3	0.04	0.68	15.5	103.1	180.9	177.3	77.6	180.7	136	88	88	86		1.001	5.616	580
79	12.723	12.992		0.16	0.17	1.29	1.09	0.26	99	99	86	1.98	0.00	90	0.015	96	96	258.3	-0.04	0.68	15.5	103.1	180.8	177.2	77.5	180.6	135	88	88	86		1.001	5.614	579
80	12.885	13.158		0.16	0.17	1.30	1.09	0.26	99	99	86	1.98	0.00	90	0.013	103	104	258.3	0.04	0.64	15.5	102.9	180.7	177.1	77.5	180.5	135	88	88	86		1.001	5.291	545
81	13.047	13.323		0.16	0.17	1.29	1.08	0.26	99	99	86	1.96	0.00	90	0.015	96	96	258.3	0.00	0.68	15.5	102.8	180.5	176.9	77.5	180.3	134	88	88	86		1.001	5.616	578
82	13.209	13.489		0.16	0.17	1.29	1.08	0.26	100	99	86	1.97	0.00	90	0.014	99	100	258.4	-0.05	0.68	15.4	102.8	180.4	176.8	77.4	180.2	134	88	88	86		1.001	5.617	578
83	13.371	13.655		0.16	0.17	1.29	1.08	0.26	100	99	86	1.98	0.00	90	0.013	103	104	258.4	-0.01	0.68	15.4	102.6	180.3	176.7	77.5	180.1	133	88	88	86		1.001	5.617	577
84	13.533	13.820		0.16	0.17	1.29	1.08	0.26	100	99	86	1.98	0.00	90	0.014	99	100	258.3	0.05	0.64	15.5	102.6	180.2	176.6	77.4	180.0	133	88	88	86		1.001	5.296	544
85	13.695	13.986		0.16	0.17	1.29	1.08	0.26	100	99	85	1.97	0.00	90	0.016	93	94	258.5	-0.14	0.63	15.4	102.4	180.1	176.5	77.4	179.8	132	88	88	85		1.001	5.272	541
86	13.857	14.151		0.16	0.16	1.29	1.08	0.26	100	99	86	1.97	0.00	92	0.013	103	103	258.2	0.25	0.68	15.6	102.3	179.9	176.3	77.4	179.7	156	88	88	86		1.001	5.619	575
87	14.019	14.316		0.16	0.17	1.29	1.08	0.26	100	99	86	1.97	0.00	94	0.015	96	96	258.3	-0.05	0.68	15.4	102.1	179.8	176.2	77.5	179.6	153	88	88	86		1.001	5.689	581
88	14.181	14.481		0.16	0.16	1.29	1.09	0.26	100	99	86	1.97	0.00	91	0.013	103	103	258.1	0.15	0.68	15.5	102.2	179.7	176.1	77.3	179.5	147	88	88	86		1.001	5.617	575
89	14.344	14.647		0.16	0.17	1.29	1.09	0.26	100	99	86	1.98	0.00	91	0.015	96	97	258.1	0.03	0.64	15.5	102.0	179.7	176.0	77.4	179.4	143	88	88	86		1.001	5.295	541
90	14.506	14.812		0.16	0.16	1.29	1.09	0.26	100	99	86	1.97	0.00	90	0.013	103	103	258.2	-0.10	0.64	15.4	101.9	179.5	176.0	77.4	179.3	140	88	88	86		1.001	5.294	540
91	14.668	14.978		0.16	0.17	1.29	1.09	0.26	100	99	86	1.97	0.00	90	0.014	99	100	258.1	0.08	0.60	15.5	101.8	179.4	175.8	77.4	179.2	138	88	88	86		1.001	4.971	507
92	14.830	15.144		0.16	0.17	1.29	1.09	0.26	100	99	86	1.98	0.00	90	0.013	103	104	258.0	0.08	0.64	15.5	101.7	179.3	175.7	77.3	179.0	137	88	88	86		1.001	5.295	539
93	14.992	15.310		0.16	0.17	1.29	1.09	0.26	100	99	86	1.98	0.00	90	0.014	99	100	258.1	-0.11	0.66	15.5	101.6	179.1	175.6	77.3	178.9	136	88	88	86		1.001	5.455	555
94	15.155	15.476		0.16	0.17	1.30	1.09	0.26	100	99	85	1.97	0.00	90	0.014	100	100	258.2	-0.06	0.66	15.4	101.5	179.0	175.5	77.3	178.8	135	88	88	85		1.001	5.454	554
95	15.317	15.641		0.16	0.16	1.30	1.08	0.26	100	99	86	1.98	0.00	90	0.014	99	100	258.1	0.10	0.66	15.5	101.3	178.9	175.3	77.4	178.6	134	88	88	86		1.001	5.457	553
96	15.479	15.807		0.16	0.17	1.30	1.08	0.26	100	99	86	1.98	0.00	90	0.014	99	100	258.2	-0.10	0.66	15.5	101.3	178.8	175.2	77.3	178.5	134	88	88	86		1.001	5.454	553
97	15.641	15.972		0.16	0.16	1.29	1.08	0.26	100	99	86	1.97	0.00	90	0.014	99	100	258.0	0.15	0.68	15.4	101.0	178.6	175.1	77.4	178.4	133	88	88	86		1.001	5.651	572
98	15.804	16.138		0.16	0.17	1.30	1.08	0.26	100	99	86	1.96	0.00	90	0.015	96	97	258.1	-0.01	0.66	15.4	101.0	178.5	174.9	77.3	178.3	133	88	88	86		1.001	5.459	552
99	15.966	16.303		0.16	0.16	1.29	1.08	0.26	100	100	86	1.97	0.00	90	0.014	99	99	258.0	0.03	0.62	15.5	100.8	178.4	174.8	77.4	178.2	132	88	88	86		1.001	5.132	518
100	16.128	16.469		0.16	0.17	1.29	1.08	0.26	100	100	86	1.97	0.00	90	0.014	99	100	258.2	-0.16	0.62	15.4	100.7	178.2	174.6	77.4	178.0	132	88	88	86		1.001	5.131	517
101	16.290	16.634		0.16	0.16	1.30	1.09	0.26	100	100	86	1.98	0.00	90	0.014	99	99	258.3	-0.10	0.66	15.4	100.6	178.2	174.6	77.3	177.9	132	88	88	86		1.001	5.454	549
102	16.452	16.800		0.16	0.17	1.30	1.09	0.26	100	100	86	1.97	0.00	90	0.014	99	100	258.1	0.20	0.64	15.5	100.4	178.0	174.5	77.4	177.8	131	88	88	86		1.001	5.292	532
103	16.614	16.966		0.16	0.17	1.30	1.09	0.26	100	100	86	1.97	0.00	90	0.014	99	100	258.3	-0.22	0.64	15.4	100.4	177.9	174.3	77.3	177.7	131	88	88	86		1.001	5.295	532
104	16.776	17.132		0.16	0.17	1.30	1.08	0.26	100	100	85	1.97	0.00	90	0.014	99	100	258.2	0.12	0.62	15.5	100.2	177.7	174.2	77.3	177.5	131	88	88	85		1.001	5.137	515
105	16.938	17.298		0.16	0.17	1.30	1.09	0.26	100	100	85	1.98	0.00	90	0.013	103	104	258.2	0.00	0.66	15.4	100.1	177.6	174.0	77.3	177.4	130	88	88	85		1.001	5.463	547
106	17.100	17.464		0.16	0.17	1.30	1.08	0.26	100	100	86	1.97	0.00	90	0.016	93	93	258.3	-0.11	0.64	15.4	100.0	177.4	173.9	77.2	177.2	130	88	88	86		1.001	5.295	530
107	17.263	17.629		0.16	0.17	1.30	1.08	0.26	100	100	86	1.97	0.00	90	0.015	96	96	258.0	0.25	0.64	15.4	100.0	177.4	173.8	77.2	177.1	129	88	88	86		1.001	5.328	533
108	17.425	17.795		0.16	0.17	1.30	1.08	0.26	100	100	85	1.97	0.00	90	0.014	99	100	258.2	-0.18	0.68	15.5	99.8	177.2	173.7	77.1	177.0	129	88	87	85		1.001	5.620	562
109	17.587	17.960		0.16	0.16	1.30	1.09	0.26	100	100	86	1.97	0.00	90	0.013	103	103	258.1	0.12	0.68	15.5	99.8	177.1	173.5	77.1	176.9	129	88	87	86		1.001	5.620	561
110	17.750	18.126		0.16	0.17	1.30	1.09	0.26	100	100	86	1.98	0.00	90	0.014	100	100	258.2	-0.08	0.66	15.5	99.6	176.9	173.4	77.1	176.7	128	88	87	86		1.001	5.457	544
111	17.912	18.292		0.16	0.17	1.30	1.08	0.26	100	100	85	1.98	0.00	90	0.014	99	100	258.2	0.01	0.66	15.5	99.5	176.8	173.3	77.1	176.6	128	88	87	85		1.001	5.459	544
112	18.074	18.458		0.16	0.17	1.30	1.09	0.26	100	100	86	1.97	0.00	90	0.014	99	100	258.1	0.10	0.68	15.4	99.5	176.6	173.1	77.0	176.5	128	88	87	86		1.001	5.618	559
113	18.237	18.623		0.16	0.17	1.30	1.09	0.26	100	100	86	1.97	0.00	90	0.014	100	99	258.2	-0.08	0.66	15.5	99.2	176.5	173.0	77.1	176.3	128	87	87	86		1.001	5.458	542
114	18.399	18.789		0.16	0.17	1.30	1.09	0.26	100	100	86	1.97	0.00	90	0.014	99	100	258.1	0.09	0.62	15.5	99.2	176.4	172.8	77.0	176.2	127	88	87	86		1.001	5.139	510

Elapsed Time	Particulate Sampling Data																	Fuel Weight, lb		Flow, gpm		Temperature Data, oF													
	Gas Meter Cubic Feet (1)	Gas Meter Cubic Feet (2)	Gas Meter Cubic Feet (amb)	Sample Rate, cfm (1)	Sample Rate, cfm (2)	Orifice dH (1)	Orifice dH (2)	Orifice dH (amb)	Meter oF (1)	Meter oF (2)	Meter oF (amb)	Meter Vac. In. Hg. (1)	Meter Vac. In. Hg. (2)	Dilution Tunnel Temp.	Dilution Tunnel dP	Pro. Rate (%) (1)	Pro. Rate (%) (2)	Scale Reading	Weight Change	Load Side Liquid Flow Rate	Boiler Side Liquid Flow Rate (optional)	Thermopile ΔT	Boiler to Heat Exch. Temp.	Heat Exch to Boiler Temp.	Inlet Load Temp.	Outlet Load Temp.	Stack	Filter (1)	Filter (2)	Ambient		Specific Heat of Inlet Water (BTU/lb-°F)	Mass Flow Rate of Inlet Water (lb/min)	Heat Output, Btu
115	18.561	18.955		0.16	0.17	1.29	1.09	0.26	100	100	86	1.98	0.00	90	0.013	103	104	258.1	-0.07	0.66	15.4	99.1	176.3	172.8	77.0	176.1	127	87	87	86		1.001	5.456	541
116	18.724	19.121		0.16	0.17	1.30	1.08	0.26	100	100	86	1.98	0.00	90	0.015	96	97	258.2	-0.07	0.70	15.5	99.0	176.2	172.7	77.0	176.0	127	87	87	86		1.001	5.780	573
117	18.886	19.287		0.16	0.17	1.29	1.07	0.26	100	100	85	1.99	0.00	93	0.014	99	100	258.0	0.25	0.64	15.5	98.7	176.0	172.5	77.1	175.8	153	88	88	85		1.001	5.342	528
118	19.048	19.452		0.16	0.17	1.30	1.08	0.26	100	100	85	1.98	0.00	93	0.014	99	100	258.0	-0.09	0.64	15.5	98.6	175.9	172.4	77.1	175.7	147	88	88	85		1.001	5.305	524
119	19.211	19.618		0.16	0.17	1.30	1.08	0.26	100	100	86	1.98	0.00	91	0.014	100	100	257.8	0.24	0.64	15.5	98.5	175.7	172.2	77.1	175.5	141	88	88	86		1.001	5.296	522
120	19.373	19.783		0.16	0.17	1.29	1.09	0.26	100	100	86	1.98	0.00	90	0.013	103	103	258.0	-0.18	0.64	15.5	98.5	175.7	172.2	77.0	175.5	137	88	87	86		1.001	5.296	522
121	19.535	19.949		0.16	0.17	1.29	1.09	0.26	100	100	86	1.97	0.00	90	0.015	96	97	257.9	0.06	0.68	15.5	98.3	175.6	172.1	77.0	175.3	135	88	87	86		1.001	5.620	553
122	19.698	20.114		0.16	0.16	1.29	1.09	0.26	100	100	86	1.97	0.00	90	0.013	103	103	257.9	0.05	0.64	15.5	98.2	175.4	172.0	77.1	175.2	133	88	87	86		1.001	5.297	520
123	19.860	20.280		0.16	0.17	1.29	1.09	0.26	100	100	86	1.97	0.00	90	0.014	99	100	257.8	0.08	0.64	15.4	98.1	175.3	171.8	77.0	175.1	131	87	87	86		1.001	5.294	520
124	20.023	20.446		0.16	0.17	1.29	1.09	0.26	100	100	86	1.98	0.00	90	0.013	103	104	257.9	-0.07	0.64	15.5	97.8	175.2	171.7	77.1	174.9	130	87	87	86		1.001	5.295	519
125	20.185	20.612		0.16	0.17	1.30	1.09	0.26	100	100	86	1.98	0.00	89	0.013	103	104	257.9	0.01	0.66	15.5	97.7	175.0	171.6	77.1	174.8	129	87	87	86		1.001	5.459	534
126	20.347	20.778		0.16	0.17	1.30	1.09	0.26	100	100	86	1.97	0.00	89	0.015	96	96	257.9	-0.04	0.68	15.5	97.6	174.9	171.4	77.1	174.7	129	87	87	86		1.001	5.619	549
127	20.510	20.944		0.16	0.17	1.30	1.09	0.26	100	100	86	1.97	0.00	89	0.013	103	104	257.8	0.07	0.66	15.4	97.4	174.7	171.3	77.1	174.5	128	87	87	86		1.001	5.483	535
128	20.672	21.110		0.16	0.17	1.30	1.09	0.26	100	100	86	1.97	0.00	89	0.015	96	96	257.8	0.07	0.66	15.5	97.3	174.6	171.2	77.1	174.4	128	87	87	86		1.001	5.459	532
129	20.835	21.275		0.16	0.16	1.30	1.08	0.26	100	100	85	1.96	0.00	89	0.014	99	99	257.8	-0.05	0.64	15.5	97.1	174.5	171.1	77.2	174.3	127	87	87	85		1.001	5.295	515
130	20.997	21.441		0.16	0.17	1.29	1.08	0.26	100	100	86	1.98	0.00	89	0.012	107	108	257.9	-0.05	0.64	15.5	97.0	174.4	171.0	77.2	174.2	127	87	87	86		1.001	5.294	514
131	21.159	21.606		0.16	0.17	1.29	1.09	0.26	100	100	85	1.98	0.00	89	0.014	99	99	257.8	0.01	0.68	15.5	96.8	174.2	170.8	77.2	174.0	126	87	87	85		1.001	5.617	545
132	21.322	21.772		0.16	0.17	1.30	1.09	0.26	100	100	85	1.98	0.00	89	0.015	96	96	257.8	0.01	0.64	15.5	96.6	174.1	170.7	77.3	173.9	126	87	87	85		1.001	5.294	512
133	21.484	21.938		0.16	0.17	1.30	1.09	0.26	100	100	85	1.98	0.00	89	0.012	107	108	257.8	0.04	0.66	15.5	96.5	173.9	170.6	77.2	173.7	126	87	87	85		1.001	5.456	527
134	21.646	22.104		0.16	0.17	1.30	1.09	0.26	100	100	85	1.97	0.00	89	0.014	99	100	257.9	-0.07	0.66	15.3	96.3	173.9	170.4	77.3	173.6	125	87	87	85		1.001	5.447	525
135	21.808	22.270		0.16	0.17	1.30	1.09	0.26	100	100	86	1.97	0.00	89	0.014	99	100	257.8	0.02	0.69	15.5	96.2	173.6	170.2	77.3	173.5	125	87	87	86		1.001	5.766	555
136	21.970	22.435		0.16	0.16	1.30	1.09	0.26	100	100	85	1.97	0.00	89	0.014	99	99	257.8	0.06	0.66	15.4	96.0	173.5	170.2	77.3	173.3	125	87	87	85		1.001	5.459	525
137	22.133	22.601		0.16	0.17	1.30	1.08	0.26	100	100	85	1.97	0.00	89	0.014	99	100	257.8	-0.03	0.67	15.5	95.9	173.4	170.0	77.3	173.2	124	87	87	85		1.001	5.551	533
138	22.295	22.768		0.16	0.17	1.29	1.08	0.26	100	100	86	1.98	0.00	89	0.012	107	108	257.8	-0.01	0.68	15.5	95.6	173.3	169.9	77.4	173.1	125	87	87	86		1.001	5.621	538
139	22.458	22.934		0.16	0.17	1.30	1.08	0.26	100	100	85	1.97	0.00	89	0.013	103	104	257.7	0.11	0.66	15.5	95.5	173.1	169.7	77.4	172.9	124	87	87	85		1.001	5.456	521
140	22.620	23.099		0.16	0.16	1.30	1.09	0.26	100	100	85	1.97	0.00	89	0.014	99	99	257.8	-0.06	0.70	15.5	95.4	173.0	169.7	77.4	172.8	124	87	87	85		1.001	5.783	552
141	22.782	23.265		0.16	0.17	1.30	1.08	0.26	100	100	85	1.98	0.00	89	0.013	103	104	257.8	-0.04	0.66	15.5	95.2	172.9	169.5	77.4	172.7	124	87	87	85		1.001	5.456	520
142	22.945	23.431		0.16	0.17	1.30	1.08	0.26	100	100	85	1.98	0.00	89	0.014	99	100	257.7	0.10	0.64	15.5	95.2	172.7	169.4	77.4	172.5	124	87	87	85		1.001	5.295	504
143	23.107	23.596		0.16	0.16	1.30	1.08	0.26	100	100	85	1.97	0.00	89	0.014	99	99	257.8	-0.09	0.70	15.5	95.0	172.6	169.2	77.4	172.4	123	87	87	85		1.001	5.781	550
144	23.270	23.762		0.16	0.17	1.29	1.09	0.26	100	100	85	1.97	0.00	89	0.012	107	108	257.8	0.04	0.66	15.4	94.9	172.5	169.2	77.4	172.3	123	87	87	85		1.001	5.458	519
145	23.432	23.928		0.16	0.17	1.30	1.09	0.26	100	100	85	1.98	0.00	89	0.014	99	100	257.7	0.05	0.65	15.4	94.8	172.4	169.1	77.4	172.2	124	87	87	85		1.001	5.425	515
146	23.595	24.093		0.16	0.16	1.30	1.09	0.26	100	100	85	1.98	0.00	89	0.013	103	103	257.8	-0.06	0.66	15.5	94.6	172.2	168.9	77.4	172.0	123	87	87	85		1.001	5.460	517
147	23.757	24.259		0.16	0.17	1.30	1.09	0.26	100	100	85	1.99	0.00	89	0.014	99	100	257.9	-0.07	0.65	15.5	94.5	172.1	168.7	77.4	171.9	123	87	87	85		1.001	5.439	515
148	23.920	24.425		0.16	0.17	1.29	1.07	0.26	100	100	85	2.00	0.00	93	0.013	104	104	257.6	0.31	0.68	15.5	94.3	172.0	168.6	77.4	171.7	149	87	87	85		1.001	5.619	531
149	24.082	24.591		0.16	0.17	1.30	1.09	0.26	100	100	85	1.98	0.00	92	0.013	103	104	257.5	0.09	0.64	15.5	94.4	171.9	168.5	77.3	171.6	142	87	87	85		1.001	5.296	500
150	24.245	24.757		0.16	0.17	1.29	1.09	0.26	100	100	85	1.97	0.00	90	0.014	100	100	257.4	0.04	0.64	15.5	94.2	171.7	168.4	77.3	171.5	137	87	87	85		1.001	5.295	499
151	24.407	24.923		0.16	0.17	1.30	1.09	0.26	100	100	85	1.99	0.00	89	0.014	99	100	257.7	-0.28	0.64	15.5	94.1	171.6	168.3	77.3	171.4	133	87	87	85		1.001	5.295	499
152	24.570	25.089		0.16	0.17	1.30	1.09	0.26	100	100	85	1.98	0.00	89	0.013	103	104	257.4	0.28	0.66	15.5	94.0	171.5	168.2	77.3	171.3	131	87	87	85		1.001	5.458	513
153	24.732	25.255		0.16	0.17	1.29	1.09	0.26	100	100	85	1.97	0.00	89	0.013	103	104	257.4	0.07	0.62	15.4	93.9	171.3	168.0	77.3	171.1	129	87	87	85		1.001	5.133	482
154	24.895	25.420		0.16	0.17	1.30	1.09	0.26	100	100	85	1.97	0.00	89	0.013	103	103	257.5	-0.11	0.66	15.4	93.8	171.3	167.9	77.2	171.1	128	87	87	85		1.001	5.459	513
155	25.057	25.586		0.16	0.17	1.30	1.09	0.26	100	100	85	1.98	0.00	89	0.013	103	104	257.4	0.03	0.67	15.5	93.6	171.1	167.8	77.3	170.9	127	87	87	85		1.001	5.592	524
156	25.220	25.752		0.16	0.17	1.30	1.09	0.26	100	100	85	1.98	0.00	89	0.014	99	100	257.5	-0.10	0.65	15.3	93.5	171.0	167.7	77.3	170.8	126	87	87	85		1.001	5.426	508
157	25.382	25.918		0.16	0.17	1.30	1.09	0.26	100	100	85	1.97	0.00	89	0.012	107	108	257.4	0.13	0.66	15.5	93.4	170.9	167.5	77.2	170.6	125	87	87	85		1.001	5.458	510
158	25.545	26.083		0.16	0.16	1.30	1.09	0.26	100	100	85	1.97	0.00	89	0.013	103	103	257.5	-0.08	0.64	15.6	93.3	170.7	167.4	77.3	170.5	125	87	87	85		1.001	5.296	495
159	25.707	26.250		0.16	0.17	1.29	1.09	0.26	100	100	85	1.98	0.00	89	0.014	99	100	257.4	0.11	0.62	15.5	93.2	170.6	167.4	77.3	170.4	124	87	87	85		1.001	5.134	479
160	25.869	26.415		0.16	0.16	1.30	1.09	0.26	100	100	85	1.98	0.00	89	0.012	107	107	257.5	-0.17	0.64	15.5	93.0	170.5	167.2	77.2	170.3	124	87	87	85		1.001	5.296	493
161	26.032	26.582		0.16	0.17	1.30	1.09	0.26	100	100	85	1.98	0.00	89	0.013	103	104	257.4	0.16	0.68	15.4	92.9	170.3	167.0	77.3	170.1	123	87	87	85		1.001	5.623	523
162	26.194	26.748		0.16	0.17	1.30	1.09	0.26	100	100	85	1.98	0.00	89	0.015	96	96	257.3	0.07	0.62	15.5	92.8	170.2	166.9	77.2	170.0	123	87	87	85		1.001	5.136	477
163	26.356	26.914		0.16	0.17	1.30	1.09	0.26	100	99	85	1.97	0.00	89	0.014	99	100	257.4	-0.07	0.66	15.4	92.7	170.1	166.8	77.2	169.9	123	87	87	85		1.001	5.460	507
164	26.519	27.080		0.16	0.17	1.30	1.09	0.26	100	99	85	1.97	0.00	89	0.014	99	100	257.4	-0.01	0.64	15.5	92.5	169.9	166.7	77.2	169.7	122	87	87	85		1.001	5.292	490
165	26.682	27.245		0.16	0.17	1.30	1.08	0.26	100	99	85	1.98	0.00	89	0.014	99	99	257.5	-0.09	0.68	15.4	92.5	169.8	166.6	77.2	169.6	122	87	87	85		1.001	5.620	520
166	26.844	27.411		0.16	0.17	1.30	1.08	0.26	100	100	85	1.99	0.00	89	0.013	103	104	257.5	0.02	0.62	15.5	92.3	169.7	166.4	77.2	169.5	122	87	87	85		1.001	5.191	479
167	27.007	27.577		0.16	0.17	1.30	1.08	0.26	100	99	85	1.98	0.00	88	0.013	103	104	257.3	0.15	0.63	15.5	92.1	169.6	166.3	77.2	169.4	121	87	87	85		1.001	5.194	479
168	27.169	27.743		0.16	0.17	1.30	1.09	0.26	100	100	85	1.98	0.00	89	0.012	107	108	257.4	-0.12	0.64	15.4	92.0	169.4	166.1	77.2	169.2	121	87	87	85		1.001	5.298	488
169	27.332	27.908		0.16	0.17	1.30	1.08	0.26	100	100	85	1.99	0.00	88	0.013	103	103	257.5	-0.09	0.66	15.5	91.9	169.3	166.0	77.2	169.1	121	87	87	85		1.001	5.459	502
170	27.494	28.074		0.16	0.17	1.30	1.09	0.26	100	100	85	1.98	0.00	89	0.013	103	104	257.5	-0.01	0.66	15.5	91.7	169.1	165.9	77.2	168.9	121	87	87	85		1.001	5.458	501
171	27.657	28.240		0.16	0.17	1.29	1.09	0.26	100	99	85	1.97	0.00	89	0.014	99	100	257.3	0.19	0.66	15.4	91.6	169.0	165.8	77.2	168.8	121	87	87	85		1.001	5.459	500
172	27.819	28.406		0.16	0.17	1.30	1.09	0.26	100	99	85	1.97	0.00	88	0.015	95	97	257.5	-0.13	0.64	15.4	91.5	168.9	165.6	77.2	168.7	120	87	87	85		1.001	5.295	485
173	27.982	28.572		0.16	0.17	1.30	1.09	0.26	100	99	85	1.97	0.00	88	0.015	96	97	257.3	0.13	0.66	15.5	91.3	168.7	165.5	77.2	168.5	121	87	87	85		1.001	5.459	499
174	28.144	28.739		0.16	0.17	1.30	1.08	0.26	100	99	85	1.97	0.00	88	0.014	99	101	257.4	-0.09	0.62	15.5	91.2	168.6	165.4	77.2	168.4	120	87	87	85		1.001	5.134	469
175	28.307	28.904		0.16	0.16	1.29	1.09	0.26	100	99	85	1.98	0.00	88	0.014	99	99	257.5	-0.04	0.64	15.5	91.1	168.5	165.2	77.2	168.2	119	87	87	85		1.001	5.295	483
176	28.470	29.070		0.16	0.17	1.29	1.09	0.26	100	99	85	1.98	0.00	88	0.014	99	100	257.4	0.05	0.68	15.4	90.9	168.4	165.2	77.3	168.2	119	87	87	85		1.001	5.661	515

Elapsed Time	Particulate Sampling Data																	Fuel Weight, lb		Flow, gpm		Temperature Data, oF													
	Gas Meter Cubic Feet (1)	Gas Meter Cubic Feet (2)	Gas Meter Cubic Feet (amb)	Sample Rate, cfm (1)	Sample Rate, cfm (2)	Orifice dH (1)	Orifice dH (2)	Orifice dH (amb)	Meter oF (1)	Meter oF (2)	Meter oF (amb)	Meter Vac. In. Hg. (1)	Meter Vac. In. Hg. (2)	Dilution Tunnel Temp.	Dilution Tunnel dP	Pro. Rate (%) (1)	Pro. Rate (%) (2)	Scale Reading	Weight Change	Load Side Liquid Flow Rate	Boiler Side Liquid Flow Rate (optional)	Thermopile ΔT	Boiler to Heat Exch. Temp.	Heat Exch to Boiler Temp.	Inlet Load Temp.	Outlet Load Temp.	Stack	Filter (1)	Filter (2)	Ambient		Specific Heat of Inlet Water (BTU/lb-°F)	Mass Flow Rate of Inlet Water (lb/min)	Heat Output, Btu
177	28.632	29.236		0.16	0.17	1.29	1.09	0.26	100	99	85	1.98	0.00	88	0.015	95	97	257.4	-0.01	0.64	15.5	90.8	168.2	165.0	77.2	168.0	120	87	87	85		1.001	5.307	483
178	28.795	29.401		0.16	0.16	1.30	1.08	0.26	100	99	85	1.97	0.00	88	0.013	103	103	257.4	0.00	0.66	15.5	90.8	168.1	165.0	77.2	167.9	119	87	87	85		1.001	5.460	496
179	28.957	29.567		0.16	0.17	1.29	1.07	0.26	100	99	85	1.98	0.00	93	0.014	99	100	257.1	0.28	0.66	15.5	90.6	168.0	164.8	77.2	167.8	146	87	87	85		1.001	5.459	495
180	29.120	29.732		0.16	0.16	1.30	1.09	0.26	100	99	85	1.98	0.00	91	0.014	100	100	257.2	-0.02	0.62	15.5	90.4	167.8	164.6	77.2	167.6	139	87	87	85		1.001	5.137	465
181	29.282	29.898		0.16	0.17	1.30	1.09	0.26	100	99	85	1.97	0.00	89	0.013	103	104	257.2	-0.03	0.68	15.4	90.3	167.7	164.5	77.3	167.5	134	87	87	85		1.001	5.621	508
182	29.444	30.064		0.16	0.17	1.30	1.09	0.26	100	99	85	1.98	0.00	89	0.014	99	100	257.0	0.21	0.70	15.5	90.2	167.6	164.4	77.2	167.4	130	87	87	85		1.001	5.783	522
183	29.607	30.230		0.16	0.17	1.30	1.09	0.26	100	99	85	1.99	0.00	88	0.013	103	104	257.1	-0.16	0.66	15.5	90.1	167.5	164.4	77.2	167.3	128	86	87	85		1.001	5.460	493
184	29.769	30.396		0.16	0.17	1.30	1.09	0.26	100	99	85	1.97	0.00	88	0.014	99	100	257.2	-0.04	0.66	15.5	90.0	167.4	164.2	77.2	167.2	126	86	87	85		1.001	5.459	492
185	29.931	30.562		0.16	0.17	1.30	1.09	0.26	100	99	85	1.98	0.00	88	0.014	99	100	257.0	0.14	0.64	15.5	89.8	167.3	164.1	77.2	167.1	125	86	87	85		1.001	5.304	477
186	30.094	30.729		0.16	0.17	1.30	1.09	0.26	100	99	85	1.97	0.00	88	0.013	103	104	257.0	0.08	0.66	15.4	89.7	167.1	164.0	77.2	166.9	124	86	87	85		1.001	5.455	490
187	30.256	30.895		0.16	0.17	1.30	1.08	0.26	100	99	85	1.97	0.00	88	0.014	99	100	257.0	-0.07	0.66	15.5	89.6	167.0	163.8	77.2	166.8	124	86	86	85		1.001	5.462	490
188	30.419	31.060		0.16	0.16	1.30	1.09	0.26	100	99	85	1.97	0.00	88	0.012	107	107	257.0	0.06	0.66	15.4	89.5	166.8	163.7	77.1	166.6	123	86	87	85		1.001	5.461	489
189	30.581	31.226		0.16	0.17	1.30	1.08	0.26	100	99	85	1.97	0.00	88	0.014	99	100	257.2	-0.22	0.68	15.5	89.3	166.6	163.6	77.2	166.5	123	86	86	85		1.001	5.623	503
190	30.744	31.392		0.16	0.17	1.30	1.08	0.26	100	99	85	1.98	0.00	88	0.013	103	104	257.0	0.19	0.64	15.4	89.2	166.6	163.5	77.3	166.4	122	86	86	85		1.001	5.298	473
191	30.906	31.557		0.16	0.16	1.30	1.09	0.26	100	99	85	1.98	0.00	88	0.013	103	103	257.1	-0.08	0.68	15.4	89.1	166.5	163.3	77.2	166.3	121	86	86	85		1.001	5.622	502
192	31.069	31.723		0.16	0.17	1.30	1.08	0.26	100	99	85	1.97	0.00	88	0.015	96	97	257.0	0.14	0.64	15.5	88.9	166.4	163.2	77.2	166.1	121	86	86	85		1.001	5.298	472
193	31.231	31.889		0.16	0.17	1.30	1.09	0.26	100	99	85	1.97	0.00	88	0.013	103	104	257.1	-0.13	0.68	15.5	88.8	166.2	163.1	77.1	166.0	121	86	86	85		1.001	5.622	500
194	31.394	32.055		0.16	0.17	1.30	1.09	0.26	100	99	85	1.97	0.00	88	0.012	107	108	257.1	0.00	0.66	15.4	88.7	166.1	163.0	77.2	165.9	121	86	86	85		1.001	5.462	485
195	31.557	32.221		0.16	0.17	1.30	1.09	0.26	100	99	85	1.98	0.00	88	0.014	99	100	257.1	-0.05	0.64	15.4	88.6	165.9	162.9	77.2	165.8	120	86	86	85		1.001	5.301	470
196	31.719	32.386		0.16	0.17	1.30	1.09	0.26	100	99	85	1.98	0.00	88	0.014	99	99	257.0	0.17	0.66	15.4	88.5	165.8	162.7	77.2	165.6	120	86	86	85		1.001	5.462	484
197	31.882	32.553		0.16	0.17	1.30	1.09	0.26	100	99	85	1.97	0.00	88	0.015	96	97	257.0	-0.02	0.62	15.6	88.4	165.7	162.6	77.1	165.5	120	86	86	85		1.001	5.184	459
198	32.044	32.719		0.16	0.17	1.30	1.09	0.26	100	99	85	1.97	0.00	88	0.013	103	104	257.0	-0.05	0.68	15.6	88.2	165.6	162.5	77.2	165.4	119	86	86	85		1.001	5.623	496
199	32.207	32.885		0.16	0.17	1.29	1.09	0.26	100	99	85	1.99	0.00	88	0.014	99	100	257.2	-0.15	0.66	15.4	88.1	165.4	162.4	77.1	165.3	119	86	86	85		1.001	5.459	482
200	32.370	33.051		0.16	0.17	1.30	1.09	0.26	100	99	85	1.98	0.00	88	0.014	99	100	257.1	0.13	0.64	15.6	88.0	165.3	162.2	77.1	165.1	119	86	86	85		1.001	5.301	467
201	32.532	33.217		0.16	0.17	1.30	1.09	0.26	100	99	85	1.98	0.00	88	0.014	99	100	257.1	-0.09	0.70	15.5	87.9	165.2	162.2	77.2	165.0	119	86	86	85		1.001	5.784	509
202	32.695	33.382		0.16	0.16	1.30	1.08	0.26	100	99	85	1.99	0.00	88	0.013	103	103	257.0	0.14	0.62	15.6	87.7	165.1	162.0	77.2	164.9	119	86	86	85		1.001	5.139	451
203	32.857	33.548		0.16	0.17	1.30	1.08	0.26	100	99	85	1.97	0.00	88	0.013	103	104	257.0	0.04	0.64	15.5	87.6	165.0	161.9	77.2	164.8	118	86	86	85		1.001	5.298	465
204	33.020	33.714		0.16	0.17	1.30	1.09	0.26	100	99	85	1.97	0.00	88	0.012	107	108	257.0	-0.03	0.68	15.5	87.4	164.8	161.7	77.2	164.6	118	86	86	85		1.001	5.621	492
205	33.183	33.880		0.16	0.17	1.30	1.09	0.26	100	99	85	1.99	0.00	88	0.013	103	104	257.0	-0.05	0.67	15.5	87.4	164.7	161.6	77.1	164.5	118	86	86	85		1.001	5.591	489
206	33.345	34.045		0.16	0.16	1.30	1.09	0.26	100	99	85	1.97	0.00	88	0.013	103	103	257.0	0.02	0.66	15.6	87.2	164.6	161.6	77.2	164.4	118	86	86	85		1.001	5.514	482
207	33.508	34.212		0.16	0.17	1.30	1.09	0.26	100	99	85	1.98	0.00	88	0.014	99	101	256.9	0.15	0.62	15.4	87.1	164.5	161.4	77.2	164.3	118	86	86	85		1.001	5.137	448
208	33.670	34.377		0.16	0.16	1.30	1.09	0.26	100	99	85	1.98	0.00	88	0.013	103	103	257.0	-0.09	0.62	15.5	86.9	164.3	161.2	77.2	164.1	118	86	86	85		1.001	5.137	447
209	33.832	34.543		0.16	0.17	1.31	1.09	0.26	100	99	85	1.98	0.00	88	0.013	103	104	257.0	-0.09	0.70	15.5	86.9	164.2	161.1	77.1	164.0	118	86	86	85		1.001	5.787	503
210	33.994	34.709		0.16	0.17	1.30	1.08	0.26	100	99	85	1.98	0.00	92	0.014	99	100	256.9	0.15	0.66	15.4	86.8	164.1	161.0	77.1	163.9	142	86	86	85		1.001	5.464	475
211	34.157	34.875		0.16	0.17	1.30	1.09	0.26	100	99	85	1.98	0.00	90	0.014	100	100	256.8	0.14	0.68	15.4	86.7	164.0	161.0	77.1	163.8	136	86	86	85		1.001	5.625	488
212	34.319	35.041		0.16	0.17	1.30	1.09	0.26	100	99	85	1.98	0.00	88	0.014	99	100	256.7	0.03	0.64	15.4	86.5	163.8	160.8	77.1	163.6	132	86	86	85		1.001	5.299	459
213	34.482	35.207		0.16	0.17	1.31	1.08	0.26	100	99	85	1.98	0.00	88	0.014	99	100	256.7	0.06	0.68	15.5	86.3	163.7	160.7	77.2	163.5	128	86	86	85		1.001	5.624	486
214	34.645	35.373		0.16	0.17	1.30	1.09	0.26	100	99	85	1.98	0.00	88	0.014	99	100	256.7	-0.08	0.68	15.3	86.3	163.6	160.6	77.1	163.4	126	86	86	85		1.001	5.625	486
215	34.807	35.538		0.16	0.16	1.31	1.09	0.26	100	99	85	1.98	0.00	88	0.013	103	103	256.7	0.07	0.64	15.4	86.2	163.5	160.5	77.1	163.3	124	86	86	85		1.001	5.304	458
216	34.970	35.704		0.16	0.17	1.30	1.09	0.26	100	99	85	1.98	0.00	88	0.013	103	104	256.7	-0.03	0.66	15.5	86.1	163.4	160.4	77.1	163.2	123	86	86	85		1.001	5.461	471
217	35.133	35.870		0.16	0.17	1.30	1.09	0.26	100	99	85	1.99	0.00	88	0.014	99	100	256.7	0.01	0.64	15.4	86.0	163.2	160.2	77.1	163.0	121	86	86	85		1.001	5.306	457
218	35.295	36.036		0.16	0.17	1.30	1.09	0.26	100	99	85	1.97	0.00	88	0.014	99	100	256.8	-0.08	0.66	15.5	85.8	163.1	160.1	77.2	162.9	121	86	86	85		1.001	5.463	469
219	35.458	36.202		0.16	0.17	1.30	1.09	0.26	100	99	85	1.99	0.00	87	0.013	103	104	256.7	0.12	0.62	15.5	85.7	162.9	160.0	77.1	162.8	121	86	86	85		1.001	5.138	441
220	35.620	36.368		0.16	0.17	1.30	1.09	0.26	100	99	84	1.98	0.00	87	0.016	92	93	256.7	0.00	0.66	15.5	85.5	162.9	159.9	77.2	162.7	121	86	86	84		1.001	5.465	468
221	35.783	36.534		0.16	0.17	1.30	1.09	0.26	100	99	85	1.97	0.00	87	0.014	99	100	256.7	-0.07	0.64	15.4	85.5	162.7	159.8	77.1	162.6	120	86	86	85		1.001	5.301	454
222	35.946	36.700		0.16	0.17	1.30	1.08	0.26	100	99	85	1.97	0.00	87	0.014	99	100	256.7	0.03	0.60	15.6	85.3	162.7	159.7	77.2	162.5	120	86	86	85		1.001	4.977	425
223	36.109	36.866		0.16	0.17	1.29	1.09	0.26	100	99	84	1.97	0.00	87	0.015	96	96	256.8	-0.07	0.64	15.5	85.3	162.5	159.5	77.0	162.3	119	86	86	84		1.001	5.297	452
224	36.272	37.032		0.16	0.17	1.30	1.09	0.26	100	99	84	1.98	0.00	87	0.012	107	108	256.7	0.02	0.70	15.5	85.2	162.4	159.4	77.1	162.2	118	86	86	84		1.001	5.787	493
225	36.434	37.198		0.16	0.17	1.31	1.09	0.26	100	99	84	1.98	0.00	87	0.016	92	93	256.6	0.14	0.69	15.5	85.0	162.3	159.3	77.1	162.1	133	86	86	84		1.001	5.772	491
226	36.596	37.363		0.16	0.16	1.29	1.07	0.26	100	99	84	1.99	0.00	94	0.015	96	96	256.1	0.47	0.66	15.5	84.9	162.2	159.2	77.1	162.0	149	86	86	84		1.001	5.464	464
227	36.759	37.528		0.16	0.16	1.30	1.08	0.26	100	99	84	1.99	0.00	97	0.013	104	104	255.2	0.88	0.64	15.5	84.8	162.0	159.0	77.0	161.8	166	86	86	84		1.001	5.354	454
228	36.921	37.693		0.16	0.16	1.30	1.08	0.26	100	99	84	2.00	0.00	100	0.014	100	100	254.5	0.78	0.62	15.4	85.0	162.3	159.3	77.0	162.0	182	86	86	84		1.001	5.164	439
229	37.083	37.858		0.16	0.16	1.30	1.09	0.26	100	99	85	2.00	0.00	102	0.014	100	101	253.5	0.95	0.68	15.4	85.3	162.8	159.7	77.1	162.4	200	86	87	85		1.001	5.623	480
230	37.245	38.023		0.16	0.17	1.30	1.09	0.26	100	99	84	2.00	0.00	107	0.015	97	98	252.7	0.84	0.66	15.5	86.0	163.4	160.3	77.0	163.0	217	87	87	84		1.001	5.464	470
231	37.407	38.188		0.16	0.16	1.31	1.09	0.26	100	99	84	2.01	0.00	111	0.013	105	105	251.8	0.89	0.60	15.5	86.7	164.2	161.0	77.1	163.7	229	87	87	84		1.001	4.979	432
232	37.569	38.354		0.16	0.17	1.31	1.09	0.26	100	99	84	1.99	0.00	113	0.014	101	102	250.9	0.93	0.64	15.5	87.5	165.0	161.8	77.0	164.6	238	87	88	84		1.001	5.303	465
233	37.731	38.518		0.16	0.16	1.31	1.09	0.26	100	99	84	2.01	0.00	115	0.015	98	98	250.2	0.71	0.66	15.5	88.3	165.9	162.7	77.1	165.4	245	88	88	84		1.001	5.463	483
234	37.892	38.683		0.16	0.16	1.30	1.08	0.26	100	99	85	2.00	0.00	117	0.013	105	106	249.5	0.65	0.64	15.4	89.3	166.8	163.6	77.0	166.3	250	88	88	85		1.001	5.305	474
235	38.054	38.847		0.16	0.16	1.30	1.09	0.26	100	99	84	2.00	0.00	118	0.014	101	101	248.1	1.42	0.66	15.5	90.4	168.0	164.7	77.0	167.4	254	88	88	84		1.001	5.457	494
236	38.216	39.012		0.16	0.16	1.31	1.09	0.26	100	99	84	2.01	0.00	119	0.013	105	106	247.2	0.87	0.66	15.4	91.2	168.8	165.5	77.1	168.3	258	88	89	84		1.001	5.482	501
237	38.377	39.176		0.16	0.16	1.31	1.09	0.26	100	99	84	2.00	0.00	121	0.015	98	98	246.3	0.93	0.63	15.5	92.3	169.9	166.6	77.1	169.4	262	89	89	84		1.001	5.228	483
238	38.539	39.340		0.16	0.16	1.31	1.09	0.26	99	99	84	2.00	0.00	122	0.015	99	98	245.3	0.95	0.66	15.5	93.5	171.1	167.7	77.0	170.6	265	89	89	84		1.001	5.494	515

Elapsed Time	Particulate Sampling Data																	Fuel Weight, lb		Flow, gpm		Temperature Data, oF													
	Gas Meter Cubic Feet (1)	Gas Meter Cubic Feet (2)	Gas Meter Cubic Feet (amb)	Sample Rate, cfm (1)	Sample Rate, cfm (2)	Orifice dH (1)	Orifice dH (2)	Orifice dH (amb)	Meter oF (1)	Meter oF (2)	Meter oF (amb)	Meter Vac. In. Hg. (1)	Meter Vac. In. Hg. (2)	Dilution Tunnel Temp.	Dilution Tunnel dP	Pro. Rate (%) (1)	Pro. Rate (%) (2)	Scale Reading	Weight Change	Load Side Liquid Flow Rate	Boiler Side Liquid Flow Rate (optional)	Thermopile ΔT	Boiler to Heat Exch. Temp.	Heat Exch to Boiler Temp.	Inlet Load Temp.	Outlet Load Temp.	Stack	Filter (1)	Filter (2)	Ambient		Specific Heat of Inlet Water (BTU/lb-°F)	Mass Flow Rate of Inlet Water (lb/min)	Heat Output, Btu
239	38.700	39.506		0.16	0.17	1.31	1.08	0.26	99	99	84	2.01	0.00	123	0.015	98	100	244.6	0.72	0.70	15.5	94.5	172.0	168.5	77.0	171.5	267	89	90	84		1.001	5.787	548
240	38.862	39.670		0.16	0.16	1.30	1.09	0.26	99	99	84	2.01	0.00	122	0.015	99	98	244.1	0.48	0.70	15.5	95.5	173.2	169.4	77.1	172.6	268	89	90	84		1.001	5.789	554
241	39.023	39.834		0.16	0.16	1.30	1.08	0.26	99	99	84	2.02	0.00	123	0.014	101	102	242.7	1.40	0.72	15.5	96.4	174.0	170.2	77.1	173.5	270	89	90	84		1.001	5.947	574
242	39.185	39.998		0.16	0.16	1.31	1.09	0.26	99	99	84	2.01	0.00	122	0.014	102	102	241.9	0.83	0.68	15.4	97.3	175.0	171.1	77.0	174.4	269	88	90	84		1.001	5.628	548
243	39.347	40.162		0.16	0.16	1.31	1.09	0.26	99	99	84	2.01	0.00	121	0.012	110	110	240.7	1.16	0.72	15.5	98.4	175.9	172.1	77.0	175.4	269	88	88	84		1.001	5.949	586
244	39.508	40.326		0.16	0.16	1.31	1.08	0.26	99	98	84	2.01	0.00	123	0.014	101	102	240.2	0.54	0.68	15.3	99.4	177.0	173.1	77.0	176.4	272	88	88	84		1.001	5.628	560
245	39.670	40.490		0.16	0.16	1.30	1.08	0.26	99	98	84	2.01	0.00	124	0.014	102	102	239.6	0.64	0.66	15.4	100.7	178.3	174.3	77.0	177.6	273	88	87	84		1.001	5.464	551
246	39.831	40.655		0.16	0.16	1.30	1.08	0.26	99	98	84	2.02	0.00	124	0.015	98	99	238.5	1.03	0.71	15.6	101.8	179.3	175.3	77.0	178.8	274	89	87	84		1.001	5.934	605
247	39.993	40.819		0.16	0.16	1.30	1.08	0.26	99	98	84	2.01	0.00	123	0.014	102	102	237.8	0.69	0.70	15.5	102.8	180.3	176.3	77.0	179.8	274	89	86	84		1.001	5.786	595
248	40.154	40.983		0.16	0.16	1.30	1.08	0.26	99	98	84	2.00	0.00	123	0.014	101	102	236.9	0.93	0.70	15.4	103.7	181.3	177.2	77.0	180.7	275	89	86	84		1.001	5.789	601
249	40.316	41.147		0.16	0.16	1.31	1.08	0.26	99	98	84	2.01	0.00	123	0.014	102	102	235.8	1.07	0.67	15.5	104.8	182.4	178.3	77.0	181.8	275	88	86	84		1.001	5.595	587
250	40.477	41.311		0.16	0.16	1.31	1.09	0.26	99	98	84	2.00	0.00	122	0.014	101	102	235.4	0.45	0.68	15.5	105.9	183.4	179.3	77.0	182.9	265	88	87	84		1.001	5.619	596
251	40.639	41.476		0.16	0.16	1.30	1.08	0.26	99	98	84	2.00	0.00	104	0.014	100	101	235.0	0.40	0.70	15.5	106.9	184.3	180.1	76.9	183.8	246	86	86	84		1.001	5.788	619
252	40.801	41.641		0.16	0.16	1.30	1.08	0.26	99	98	84	1.99	0.00	99	0.015	97	97	234.7	0.34	0.68	15.5	107.5	184.8	180.7	77.0	184.4	235	85	86	84		1.001	5.626	605
253	40.963	41.807		0.16	0.17	1.30	1.09	0.26	99	98	84	1.98	0.00	96	0.014	100	101	234.5	0.16	0.70	15.4	107.7	185.0	180.9	76.9	184.6	228	84	86	84		1.001	5.787	624
254	41.125	41.972		0.16	0.16	1.30	1.08	0.26	99	98	84	2.00	0.00	95	0.014	100	100	234.3	0.16	0.70	15.5	107.8	185.1	181.0	76.9	184.7	220	84	86	84		1.001	5.789	625
255	41.287	42.137		0.16	0.16	1.30	1.08	0.26	99	98	84	1.98	0.00	94	0.014	100	100	234.2	0.10	0.68	15.5	108.0	185.2	181.1	76.9	184.9	213	84	86	84		1.001	5.623	608
256	41.449	42.302		0.16	0.16	1.30	1.08	0.26	99	98	84	1.99	0.00	93	0.014	99	100	234.1	0.11	0.66	15.5	108.1	185.3	181.2	76.9	185.0	208	83	86	84		1.001	5.477	593
257	41.611	42.468		0.16	0.17	1.31	1.09	0.26	99	98	84	1.97	0.00	93	0.014	99	101	234.0	0.09	0.68	15.4	108.2	185.4	181.4	76.9	185.1	205	83	86	84		1.001	5.638	611
258	41.773	42.633		0.16	0.16	1.30	1.08	0.26	99	98	84	1.99	0.00	92	0.014	99	100	233.8	0.23	0.69	15.5	108.3	185.5	181.5	76.8	185.1	201	83	86	84		1.001	5.769	626
259	41.936	42.799		0.16	0.17	1.30	1.09	0.26	99	98	84	1.97	0.00	92	0.014	100	100	233.9	-0.07	0.62	15.5	108.4	185.5	181.8	76.9	185.3	199	83	86	84		1.001	5.139	558
260	42.098	42.964		0.16	0.16	1.30	1.09	0.26	99	98	84	1.98	0.00	90	0.015	96	96	233.7	0.13	0.64	15.4	108.4	185.5	181.8	76.8	185.2	198	83	86	84		1.001	5.303	576
261	42.261	43.130		0.16	0.17	1.30	1.08	0.26	99	98	84	1.98	0.00	90	0.014	100	100	233.8	-0.01	0.58	15.4	108.5	185.6	181.9	76.8	185.3	196	83	86	84		1.001	4.815	523
262	42.423	43.296		0.16	0.17	1.30	1.08	0.26	99	98	84	1.98	0.00	90	0.012	107	108	233.8	-0.05	0.66	15.4	108.5	185.6	182.0	76.8	185.4	194	84	86	84		1.001	5.464	594
263	42.585	43.462		0.16	0.17	1.31	1.09	0.26	99	98	84	1.97	0.00	89	0.015	96	97	233.7	0.13	0.66	15.5	108.4	185.6	181.9	76.9	185.4	192	84	86	84		1.001	5.462	593
264	42.748	43.627		0.16	0.16	1.30	1.08	0.26	99	98	84	1.99	0.00	89	0.014	100	100	233.6	0.06	0.66	15.5	108.5	185.7	182.3	76.9	185.4	190	84	86	84		1.001	5.462	594
265	42.911	43.793		0.16	0.17	1.30	1.08	0.26	99	98	84	1.98	0.00	89	0.014	100	100	233.5	0.09	0.42	15.4	108.4	185.7	183.9	76.9	185.3	187	84	86	84		1.001	3.525	383
266	43.073	43.958		0.16	0.16	1.30	1.08	0.26	99	98	84	1.98	0.00	89	0.014	99	100	233.6	-0.12	0.62	15.5	108.5	185.7	182.1	76.9	185.4	185	84	86	84		1.001	5.142	559
267	43.235	44.123		0.16	0.16	1.30	1.08	0.26	99	98	84	1.99	0.00	89	0.014	99	100	233.6	0.09	0.66	15.5	108.5	185.7	182.0	76.9	185.4	183	85	86	84		1.001	5.458	593
268	43.398	44.289		0.16	0.17	1.30	1.08	0.26	99	98	84	1.97	0.00	89	0.013	103	104	233.5	0.09	0.62	15.4	108.6	185.7	182.0	76.9	185.5	181	85	86	84		1.001	5.140	559
269	43.560	44.454		0.16	0.16	1.30	1.09	0.26	99	98	84	1.98	0.00	89	0.013	103	103	233.6	-0.11	0.61	15.4	108.6	185.7	182.0	76.9	185.5	179	85	86	84		1.001	5.031	547
270	43.723	44.620		0.16	0.17	1.30	1.09	0.26	99	98	84	1.99	0.00	89	0.015	96	97	233.5	0.08	0.68	15.5	108.6	185.7	182.0	76.9	185.5	177	85	86	84		1.001	5.625	612
271	43.885	44.785		0.16	0.16	1.30	1.08	0.26	99	98	84	1.99	0.00	89	0.013	103	103	233.5	-0.03	0.66	15.4	108.6	185.7	182.0	76.9	185.5	175	85	86	84		1.001	5.463	594
272	44.048	44.951		0.16	0.17	1.29	1.09	0.26	99	98	84	1.99	0.00	88	0.012	108	108	233.5	0.01	0.62	15.4	108.5	185.7	182.0	76.9	185.4	173	85	86	84		1.001	5.141	559
273	44.210	45.117		0.16	0.17	1.30	1.08	0.26	99	98	84	1.99	0.00	88	0.013	103	104	233.6	-0.11	0.62	15.4	108.5	185.6	181.9	76.8	185.4	171	85	86	84		1.001	5.141	559
274	44.373	45.283		0.16	0.17	1.30	1.09	0.26	99	98	84	1.99	0.00	88	0.015	96	97	233.4	0.23	0.64	15.6	108.5	185.7	182.0	76.8	185.4	169	85	86	84		1.001	5.303	576
275	44.535	45.449		0.16	0.17	1.30	1.09	0.26	99	98	84	1.98	0.00	88	0.014	99	100	233.6	-0.17	0.62	15.4	108.5	185.6	181.9	76.9	185.3	168	85	86	84		1.001	5.146	559
276	44.698	45.614		0.16	0.16	1.30	1.08	0.26	99	98	84	1.98	0.00	88	0.013	103	103	233.6	0.00	0.62	15.5	108.4	185.6	181.9	76.9	185.3	166	85	86	84		1.001	5.139	558
277	44.860	45.780		0.16	0.17	1.30	1.08	0.26	99	98	84	1.97	0.00	88	0.013	103	104	233.5	0.02	0.66	15.5	108.4	185.5	181.8	76.9	185.3	165	85	86	84		1.001	5.456	592
278	45.022	45.945		0.16	0.16	1.30	1.08	0.26	99	98	84	1.98	0.00	88	0.016	93	93	233.6	-0.05	0.60	15.5	108.4	185.5	181.8	76.9	185.2	163	85	86	84		1.001	4.985	541
279	45.185	46.111		0.16	0.17	1.30	1.09	0.26	99	98	84	1.99	0.00	88	0.014	100	100	233.5	0.12	0.59	15.4	108.4	185.5	181.8	76.8	185.2	162	85	86	84		1.001	4.914	533
280	45.347	46.276		0.16	0.17	1.30	1.09	0.26	99	98	84	1.98	0.00	88	0.015	96	96	233.5	-0.05	0.66	15.6	108.3	185.4	181.7	76.8	185.1	161	85	86	84		1.001	5.464	592
281	45.509	46.442		0.16	0.17	1.31	1.09	0.26	99	98	84	1.98	0.00	88	0.012	107	108	233.6	-0.10	0.66	15.5	108.3	185.4	181.7	76.8	185.1	159	85	86	84		1.001	5.465	592
282	45.672	46.608		0.16	0.17	1.30	1.09	0.26	99	98	84	1.98	0.00	88	0.013	103	104	233.6	0.06	0.60	15.4	108.2	185.3	181.6	76.8	185.0	158	85	86	84		1.001	4.981	539
283	45.834	46.773		0.16	0.17	1.31	1.09	0.26	99	98	84	1.99	0.00	88	0.013	103	103	233.5	0.05	0.64	15.4	108.1	185.2	181.5	76.8	184.9	157	85	85	84		1.001	5.305	574
284	45.996	46.940		0.16	0.17	1.30	1.09	0.26	99	98	84	1.98	0.00	88	0.013	103	105	233.6	-0.08	0.62	15.4	108.0	185.1	181.5	76.9	184.9	155	85	85	84		1.001	5.141	556
285	46.159	47.106		0.16	0.17	1.30	1.09	0.26	99	98	84	1.98	0.00	88	0.015	96	97	233.5	0.11	0.58	15.4	108.0	185.1	181.4	76.8	184.8	154	85	85	84		1.001	4.819	521
286	46.321	47.271		0.16	0.16	1.30	1.09	0.26	99	98	84	1.98	0.00	88	0.014	99	100	233.5	0.01	0.62	15.5	107.8	185.0	181.3	76.9	184.7	153	85	85	84		1.001	5.142	555
287	46.484	47.437		0.16	0.17	1.30	1.08	0.26	99	98	84	1.98	0.00	88	0.014	100	100	233.6	-0.09	0.62	15.5	107.8	184.9	181.2	76.8	184.6	152	85	85	84		1.001	5.143	555
288	46.647	47.602		0.16	0.16	1.30	1.08	0.26	99	98	84	1.98	0.00	88	0.015	96	96	233.6	-0.07	0.64	15.4	107.7	184.8	181.2	76.9	184.6	151	85	85	84		1.001	5.305	572
289	46.809	47.768		0.16	0.17	1.30	1.09	0.26	99	98	84	1.98	0.00	88	0.014	99	100	233.5	0.09	0.66	15.5	107.6	184.8	181.1	76.9	184.5	150	85	85	84		1.001	5.499	593
290	46.971	47.933		0.16	0.16	1.31	1.09	0.26	99	98	84	1.99	0.00	87	0.013	103	103	233.5	0.02	0.60	15.5	107.6	184.7	181.0	76.9	184.4	149	85	85	84		1.001	4.981	536
291	47.134	48.099		0.16	0.17	1.30	1.09	0.26	99	98	84	1.98	0.00	87	0.012	107	108	233.6	-0.03	0.58	15.5	107.5	184.6	181.0	76.9	184.4	149	85	85	84		1.001	4.819	519
292	47.296	48.265		0.16	0.17	1.30	1.09	0.26	99	98	84	1.97	0.00	87	0.012	107	108	233.5	0.02	0.68	15.5	107.4	184.6	180.9	76.9	184.3	148	85	85	84		1.001	5.631	605
293	47.459	48.430		0.16	0.16	1.30	1.09	0.26	99	98	84	1.99	0.00	87	0.013	103	103	233.7	-0.19	0.58	15.5	107.3	184.4	180.8	76.9	184.2	147	85	85	84		1.001	4.820	518
294	47.621	48.596		0.16	0.17	1.30	1.09	0.26	99	98	84	1.98	0.00	87	0.013	103	104	233.6	0.16	0.64	15.5	107.2	184.4	180.8	76.9	184.1	146	85	85	84		1.001	5.306	570
295	47.784	48.762		0.16	0.17	1.30	1.09	0.26	99	98	84	1.98	0.00	87	0.013	103	104	233.5	0.04	0.64	15.5	107.1	184.3	180.6	76.9	184.0	145	85	85	84		1.001	5.305	569
296	47.947	48.929		0.16	0.17	1.30	1.09	0.26	99	98	84	1.97	0.00	87	0.012	107	109	233.6	-0.10	0.64	15.4	107.1	184.2	180.6	76.9	183.9	144	85	85	84		1.001	5.305	569
297	48.109	49.094		0.16	0.16	1.30	1.08	0.26	99	98	84	1.98	0.00	87	0.014	99	99	233.7	-0.10	0.62	15.5	107.0	184.1	180.5	76.9	183.8	144	85	85	84		1.001	5.148	551
298	48.272	49.260		0.16	0.17	1.30	1.08	0.26	99	98	84	1.98	0.00	87	0.013	103	104	233.6	0.12	0.66	15.5	106.9	184.0	180.4	76.9	183.8	143	85	85	84		1.001	5.479	586
299	48.434	49.425		0.16	0.16	1.30	1.08	0.26	99	98	84	1.99	0.00	87	0.014	99	99	233.6	0.05	0.60	15.4	106.8	183.9	180.3	76.9	183.7	143	85	85	84		1.001	4.970	531
300	48.597	49.590		0.16	0.17	1.29	1.09	0.26	99	98	84	1.97	0.00	87	0.013	103	103	233.7	-0.11	0.64	15.5	106.7	183.8	180.2	76.9	183.6	142	85	85	84		1.001	5.305	566

Elapsed Time	Particulate Sampling Data																	Fuel Weight, lb		Flow, gpm		Temperature Data, oF													
	Gas Meter Cubic Feet (1)	Gas Meter Cubic Feet (2)	Gas Meter Cubic Feet (amb)	Sample Rate, cfm (1)	Sample Rate, cfm (2)	Orifice dH (1)	Orifice dH (2)	Orifice dH (amb)	Meter oF (1)	Meter oF (2)	Meter oF (amb)	Meter Vac. In. Hg. (1)	Meter Vac. In. Hg. (2)	Dilution Tunnel Temp.	Dilution Tunnel dP	Pro. Rate (%) (1)	Pro. Rate (%) (2)	Scale Reading	Weight Change	Load Side Liquid Flow Rate	Boiler Side Liquid Flow Rate (optional)	Thermopile ΔT	Boiler to Heat Exch. Temp.	Heat Exch to Boiler Temp.	Inlet Load Temp.	Outlet Load Temp.	Stack	Filter (1)	Filter (2)	Ambient		Specific Heat of Inlet Water (BTU/lb-°F)	Mass Flow Rate of Inlet Water (lb/min)	Heat Output, Btu
301	48.759	49.756		0.16	0.17	1.30	1.08	0.26	99	98	84	1.98	0.00	87	0.014	99	100	233.7	0.01	0.62	15.5	106.6	183.8	180.2	76.9	183.5	142	85	85	84		1.001	5.145	549
302	48.922	49.922		0.16	0.17	1.30	1.09	0.26	99	98	84	1.99	0.00	87	0.014	99	100	233.7	-0.01	0.58	15.5	106.5	183.6	180.0	76.9	183.4	141	85	85	84		1.001	4.821	514
303	49.084	50.088		0.16	0.17	1.30	1.09	0.26	99	97	84	1.97	0.00	87	0.014	99	100	233.7	-0.02	0.62	15.5	106.4	183.5	179.9	76.9	183.3	140	84	85	84		1.001	5.144	548
304	49.247	50.253		0.16	0.16	1.30	1.09	0.26	99	97	84	1.99	0.00	87	0.013	103	103	233.6	0.04	0.62	15.5	106.2	183.4	179.7	76.9	183.1	140	84	85	84		1.001	5.143	547
305	49.409	50.419		0.16	0.17	1.31	1.09	0.26	99	98	84	1.99	0.00	87	0.013	103	104	233.6	0.05	0.66	15.4	106.2	183.3	179.7	76.9	183.1	139	84	85	84		1.001	5.466	581
306	49.571	50.585		0.16	0.17	1.31	1.08	0.26	99	97	84	1.97	0.00	87	0.013	103	104	233.5	0.06	0.62	15.4	106.1	183.2	179.6	76.9	183.0	139	84	85	84		1.001	5.143	546
307	49.734	50.751		0.16	0.17	1.30	1.09	0.26	99	97	84	1.98	0.00	87	0.013	103	104	233.6	-0.05	0.64	15.5	106.0	183.1	179.5	76.9	182.9	138	84	85	84		1.001	5.306	563
308	49.896	50.917		0.16	0.17	1.31	1.09	0.26	99	97	84	1.99	0.00	87	0.013	103	104	233.6	-0.03	0.56	15.5	105.9	183.0	179.4	76.9	182.8	138	84	85	84		1.001	4.667	495
309	50.058	51.082		0.16	0.16	1.30	1.08	0.26	99	97	84	1.98	0.00	87	0.013	103	103	233.6	-0.03	0.60	15.5	105.8	182.9	179.3	76.9	182.6	137	84	85	84		1.001	4.950	524
310	50.221	51.248		0.16	0.17	1.31	1.08	0.26	98	97	83	1.99	0.00	87	0.013	103	104	233.6	0.06	0.62	15.5	105.7	182.8	179.2	76.8	182.5	136	84	85	83		1.001	5.144	544
311	50.383	51.413		0.16	0.16	1.30	1.09	0.26	98	97	84	1.98	0.00	87	0.014	99	100	233.7	-0.08	0.60	15.4	105.6	182.7	179.1	76.9	182.5	136	84	85	84		1.001	4.983	527
312	50.546	51.579		0.16	0.17	1.30	1.09	0.26	98	97	84	1.97	0.00	87	0.013	103	104	233.6	0.11	0.60	15.4	105.5	182.6	179.0	76.8	182.3	136	84	85	84		1.001	4.984	527
313	50.708	51.744		0.16	0.16	1.31	1.09	0.26	98	97	83	1.99	0.00	87	0.013	103	103	233.5	0.01	0.66	15.5	105.4	182.4	178.9	76.8	182.2	136	84	85	83		1.001	5.468	577
314	50.870	51.910		0.16	0.17	1.31	1.09	0.26	98	97	83	1.99	0.00	87	0.014	99	100	233.6	-0.07	0.62	15.4	105.3	182.4	178.8	76.8	182.1	135	84	85	83		1.001	5.143	542
315	51.033	52.075		0.16	0.17	1.31	1.09	0.26	98	97	83	1.99	0.00	87	0.014	100	100	233.6	0.01	0.64	15.5	105.2	182.2	178.7	76.8	182.0	135	84	85	83		1.001	5.308	559
316	51.195	52.241		0.16	0.17	1.30	1.09	0.26	98	97	83	1.98	0.00	87	0.015	96	97	233.6	0.04	0.62	15.4	105.1	182.1	178.5	76.8	181.9	135	84	84	83		1.001	5.148	542
317	51.358	52.407		0.16	0.17	1.30	1.09	0.26	98	97	84	1.97	0.00	87	0.014	100	100	233.4	0.14	0.64	15.4	105.0	182.0	178.5	76.8	181.8	134	84	84	84		1.001	5.304	557
318	51.520	52.573		0.16	0.17	1.30	1.08	0.26	98	97	83	1.97	0.00	87	0.015	96	97	233.6	-0.21	0.62	15.4	104.9	181.9	178.3	76.7	181.7	134	84	84	83		1.001	5.148	541
319	51.683	52.738		0.16	0.16	1.30	1.09	0.26	98	97	83	1.97	0.00	87	0.013	103	103	233.4	0.22	0.66	15.4	104.8	181.8	178.2	76.7	181.5	157	84	84	83		1.001	5.447	571
320	51.845	52.903		0.16	0.16	1.30	1.07	0.26	98	97	83	1.99	0.00	99	0.014	100	101	233.1	0.29	0.65	15.3	104.7	181.7	178.1	76.7	181.4	160	85	86	83		1.001	5.366	562
321	52.007	53.068		0.16	0.16	1.30	1.09	0.26	98	97	83	1.98	0.00	89	0.015	96	96	233.0	0.14	0.58	15.4	104.5	181.5	178.0	76.7	181.3	154	84	84	83		1.001	4.822	505
322	52.170	53.234		0.16	0.17	1.30	1.09	0.26	98	97	83	1.98	0.00	87	0.014	100	100	233.1	-0.14	0.64	15.5	104.4	181.4	177.9	76.7	181.1	149	84	84	83		1.001	5.307	555
323	52.333	53.400		0.16	0.17	1.30	1.09	0.26	98	97	83	1.97	0.00	87	0.014	100	100	233.0	0.12	0.60	15.4	104.4	181.4	177.8	76.7	181.1	146	84	84	83		1.001	4.984	521
324	52.495	53.566		0.16	0.17	1.30	1.09	0.26	98	97	83	1.97	0.00	87	0.014	99	100	233.0	-0.03	0.68	15.4	104.3	181.3	177.7	76.7	181.0	143	84	84	83		1.001	5.633	588
325	52.658	53.732		0.16	0.17	1.30	1.09	0.26	98	97	83	1.97	0.00	87	0.014	100	100	233.0	-0.02	0.68	15.4	104.2	181.1	177.6	76.7	180.9	141	84	84	83		1.001	5.630	587
326	52.820	53.898		0.16	0.17	1.30	1.09	0.26	98	97	83	1.98	0.00	86	0.014	99	100	232.8	0.20	0.60	15.5	104.0	181.0	177.5	76.7	180.8	139	84	84	83		1.001	4.983	519
327	52.983	54.064		0.16	0.17	1.30	1.09	0.26	98	97	83	1.98	0.00	86	0.014	100	100	232.9	-0.08	0.58	15.5	104.0	180.9	177.4	76.7	180.6	138	84	84	83		1.001	4.819	502
328	53.146	54.231		0.16	0.17	1.31	1.10	0.26	98	97	83	1.98	0.00	86	0.013	103	105	233.0	-0.10	0.64	15.5	103.8	180.8	177.2	76.7	180.5	137	84	84	83		1.001	5.310	552
329	53.309	54.397		0.16	0.17	1.30	1.09	0.26	98	97	83	1.98	0.00	86	0.013	103	104	233.1	-0.05	0.61	15.5	103.7	180.7	177.1	76.7	180.4	136	84	84	83		1.001	5.029	522
330	53.471	54.563		0.16	0.17	1.31	1.09	0.26	98	97	83	1.98	0.00	86	0.013	103	104	233.0	0.12	0.59	15.6	103.6	180.5	177.0	76.7	180.3	134	84	84	83		1.001	4.886	507
331	53.633	54.729		0.16	0.17	1.31	1.09	0.26	98	97	83	1.99	0.00	86	0.014	99	100	233.0	-0.05	0.62	15.4	103.4	180.4	176.9	76.7	180.1	134	84	84	83		1.001	5.146	533
332	53.796	54.895		0.16	0.17	1.31	1.09	0.26	98	97	83	1.99	0.00	86	0.015	96	97	233.0	-0.01	0.64	15.5	103.4	180.2	176.7	76.7	180.0	133	84	84	83		1.001	5.307	549
333	53.958	55.060		0.16	0.16	1.31	1.09	0.26	98	97	83	1.98	0.00	86	0.013	103	103	233.0	0.03	0.64	15.5	103.2	180.2	176.7	76.7	179.9	132	84	84	83		1.001	5.308	549
334	54.121	55.226		0.16	0.17	1.31	1.09	0.26	98	97	83	1.97	0.00	86	0.015	96	97	233.0	-0.01	0.64	15.5	103.1	180.0	176.5	76.7	179.7	132	84	84	83		1.001	5.310	548
335	54.283	55.392		0.16	0.17	1.31	1.09	0.26	98	97	83	1.99	0.00	86	0.013	103	104	233.1	-0.07	0.56	15.4	103.0	179.9	176.4	76.7	179.7	131	84	84	83		1.001	4.662	481
336	54.446	55.558		0.16	0.17	1.31	1.09	0.26	98	97	83	1.97	0.00	86	0.013	103	104	232.9	0.16	0.66	15.4	102.9	179.8	176.3	76.7	179.5	131	84	84	83		1.001	5.470	563
337	54.608	55.724		0.16	0.17	1.31	1.09	0.26	98	97	83	1.98	0.00	86	0.016	93	94	233.1	-0.21	0.62	15.5	102.7	179.6	176.2	76.7	179.4	130	84	84	83		1.001	5.134	528
338	54.771	55.890		0.16	0.17	1.31	1.09	0.26	98	97	83	1.97	0.00	86	0.014	100	100	233.0	0.13	0.61	15.4	102.6	179.5	176.0	76.7	179.3	130	84	84	83		1.001	5.057	519
339	54.934	56.056		0.16	0.17	1.31	1.09	0.26	98	97	83	1.99	0.00	86	0.014	100	100	232.9	0.06	0.62	15.4	102.5	179.4	175.9	76.6	179.2	130	84	84	83		1.001	5.161	530
340	55.096	56.222		0.16	0.17	1.31	1.09	0.26	98	97	83	1.98	0.00	86	0.013	103	104	233.0	-0.06	0.59	15.4	102.4	179.3	175.8	76.7	179.0	129	84	84	83		1.001	4.864	498
341	55.259	56.388		0.16	0.17	1.30	1.09	0.26	98	97	83	1.98	0.00	86	0.015	96	97	233.0	-0.04	0.60	15.5	102.3	179.2	175.7	76.6	178.9	129	84	84	83		1.001	4.995	512
342	55.422	56.555		0.16	0.17	1.31	1.09	0.26	98	97	83	1.99	0.00	86	0.014	100	101	233.0	0.05	0.62	15.5	102.2	179.0	175.6	76.6	178.8	129	84	84	83		1.001	5.146	526
343	55.584	56.721		0.16	0.17	1.30	1.09	0.26	98	97	83	1.99	0.00	86	0.015	96	97	233.1	-0.13	0.62	15.5	102.1	178.9	175.5	76.6	178.7	128	84	84	83		1.001	5.150	526
344	55.747	56.887		0.16	0.17	1.31	1.09	0.26	98	97	83	1.99	0.00	86	0.014	100	100	233.1	0.05	0.58	15.5	101.9	178.8	175.3	76.7	178.5	128	84	84	83		1.001	4.824	492
345	55.910	57.053		0.16	0.17	1.30	1.09	0.26	98	97	83	1.98	0.00	86	0.014	100	100	233.0	0.10	0.64	15.5	101.8	178.6	175.2	76.6	178.4	128	84	84	83		1.001	5.311	541
346	56.073	57.218		0.16	0.17	1.30	1.08	0.26	98	97	83	1.97	0.00	86	0.015	96	96	233.1	-0.12	0.62	15.5	101.6	178.5	175.0	76.6	178.3	127	84	84	83		1.001	5.146	523
347	56.235	57.384		0.16	0.17	1.30	1.09	0.26	98	97	83	1.98	0.00	86	0.013	103	104	232.8	0.25	0.62	15.5	101.6	178.4	175.0	76.6	178.2	127	84	84	83		1.001	5.148	524
348	56.398	57.550		0.16	0.17	1.31	1.09	0.26	98	97	83	1.97	0.00	86	0.013	103	104	233.0	-0.14	0.66	15.5	101.4	178.2	174.8	76.6	178.0	126	84	84	83		1.001	5.460	554
349	56.560	57.716		0.16	0.17	1.31	1.09	0.26	98	97	83	1.98	0.00	86	0.014	99	100	232.9	0.05	0.61	15.5	101.3	178.1	174.7	76.6	177.9	126	84	84	83		1.001	5.097	517
350	56.723	57.882		0.16	0.17	1.30	1.09	0.26	98	97	83	1.97	0.00	86	0.012	108	108	232.9	0.05	0.62	15.4	101.2	178.0	174.5	76.6	177.7	152	83	84	83		1.001	5.149	522
351	56.885	58.047		0.16	0.16	1.30	1.08	0.26	98	97	83	1.98	0.00	93	0.014	100	100	232.8	0.08	0.62	15.5	101.1	177.9	174.5	76.6	177.7	151	84	85	83		1.001	5.149	521
352	57.048	58.213		0.16	0.17	1.31	1.09	0.26	98	97	83	1.99	0.00	87	0.012	108	108	232.6	0.19	0.66	15.5	100.9	177.7	174.3	76.6	177.5	145	84	84	83		1.001	5.476	553
353	57.210	58.379		0.16	0.17	1.30	1.09	0.26	98	97	83	1.99	0.00	86	0.016	93	94	232.6	-0.02	0.66	15.5	100.8	177.6	174.2	76.6	177.4	141	84	84	83		1.001	5.473	552
354	57.372	58.546		0.16	0.17	1.31	1.09	0.26	98	97	83	1.99	0.00	86	0.014	99	101	232.7	-0.13	0.68	15.5	100.6	177.5	173.9	76.6	177.2	138	84	84	83		1.001	5.635	568
355	57.535	58.712		0.16	0.17	1.31	1.09	0.26	98	97	83	1.98	0.00	86	0.012	108	108	232.7	0.07	0.62	15.5	100.6	177.4	173.8	76.6	177.2	136	83	84	83		1.001	5.151	519
356	57.697	58.877		0.16	0.16	1.31	1.09	0.26	97	97	83	1.99	0.00	86	0.013	103	103	232.6	0.11	0.66	15.4	100.5	177.3	173.7	76.6	177.1	134	83	84	83		1.001	5.475	551
357	57.859	59.043		0.16	0.17	1.31	1.09	0.26	97	96	83	1.99	0.00	86	0.014	99	100	232.6	-0.09	0.72	15.5	100.4	177.2	173.6	76.5	176.9	133	83	84	83		1.001	5.959	599
358	58.022	59.209		0.16	0.17	1.31	1.09	0.26	97	96	83	1.98	0.00	86	0.014	100	100	232.6	0.03	0.64	15.5	100.2	177.0	173.4	76.5	176.8	132	83	84	83		1.001	5.312	533
359	58.185	59.375		0.16	0.17	1.31	1.09	0.26	97	96	83	1.98	0.00	85	0.014	100	100	232.6	0.02	0.63	15.4	100.2	176.9	173.3	76.5	176.6	131	83	84	83		1.001	5.219	523
360	58.347	59.541		0.16	0.17	1.31	1.09	0.26	97	96	83	1.98	0.00	86	0.014	99	100	232.6	0.02	0.64	15.5	100.0	176.8	173.2	76.5	176.5	130	83	84	83		1.001	5.311	532
361	58.509	59.707		0.16	0.17	1.31	1.09	0.26	97	96	83	1.97	0.00	85	0.013	103	104	232.6	0.01	0.72	15.4	99.9	176.6	173.1	76.5	176.3	129	83	84	83		1.001	5.960	596
362	58.672	59.873		0.16	0.17	1.31	1.09	0.26	97	96	83	1.98	0.00	85	0.014	100	100	232.5	0.10	0.64	15.5	99.8	176.5	172.9	76.5	176.2	129	83	83	83		1.001	5.310	530

Elapsed Time	Particulate Sampling Data																	Fuel Weight, lb		Flow, gpm		Temperature Data, oF													
	Gas Meter Cubic Feet (1)	Gas Meter Cubic Feet (2)	Gas Meter Cubic Feet (amb)	Sample Rate, cfm (1)	Sample Rate, cfm (2)	Orifice dH (1)	Orifice dH (2)	Orifice dH (amb)	Meter oF (1)	Meter oF (2)	Meter oF (amb)	Meter Vac. In. Hg. (1)	Meter Vac. In. Hg. (2)	Dilution Tunnel Temp.	Dilution Tunnel dP	Pro. Rate (%) (1)	Pro. Rate (%) (2)	Scale Reading	Weight Change	Load Side Liquid Flow Rate	Boiler Side Liquid Flow Rate (optional)	Thermopile ΔT	Boiler to Heat Exch. Temp.	Heat Exch to Boiler Temp.	Inlet Load Temp.	Outlet Load Temp.	Stack	Filter (1)	Filter (2)	Ambient		Specific Heat of Inlet Water (BTU/lb-°F)	Mass Flow Rate of Inlet Water (lb/min)	Heat Output, Btu
363	58.835	60.039		0.16	0.17	1.31	1.10	0.26	97	96	82	1.99	0.00	85	0.013	103	104	232.5	-0.04	0.64	15.5	99.6	176.3	172.8	76.5	176.1	128	83	84	82		1.001	5.312	530
364	58.998	60.205		0.16	0.17	1.31	1.09	0.26	97	96	83	1.98	0.00	85	0.014	100	100	232.5	0.02	0.60	15.5	99.5	176.2	172.7	76.4	176.0	128	83	84	83		1.001	4.988	497
365	59.160	60.371		0.16	0.17	1.30	1.10	0.26	97	96	83	1.98	0.00	85	0.012	107	108	232.6	-0.12	0.62	15.4	99.4	176.1	172.5	76.4	175.8	127	83	83	83		1.001	5.150	513
366	59.323	60.538		0.16	0.17	1.30	1.09	0.26	97	96	83	1.97	0.00	85	0.013	103	105	232.6	-0.01	0.58	15.5	99.2	175.9	172.4	76.5	175.7	126	83	83	83		1.001	4.834	480
367	59.485	60.704		0.16	0.17	1.30	1.09	0.26	97	96	83	1.98	0.00	85	0.013	103	104	232.5	0.14	0.64	15.5	99.1	175.8	172.3	76.5	175.6	126	83	83	83		1.001	5.314	527
368	59.648	60.870		0.16	0.17	1.30	1.09	0.26	97	96	82	1.97	0.00	85	0.012	108	108	232.5	-0.03	0.62	15.5	98.9	175.6	172.1	76.4	175.4	126	83	83	82		1.001	5.188	514
369	59.811	61.036		0.16	0.17	1.30	1.09	0.26	97	96	82	1.99	0.00	85	0.014	100	100	232.4	0.07	0.67	15.4	98.9	175.6	172.0	76.4	175.3	125	83	83	82		1.001	5.583	553
370	59.973	61.202		0.16	0.17	1.30	1.09	0.26	97	96	82	1.97	0.00	85	0.015	96	97	232.4	0.01	0.72	15.5	98.8	175.4	171.9	76.4	175.2	125	83	83	82		1.001	5.959	589
371	60.136	61.368		0.16	0.17	1.30	1.09	0.26	97	96	83	1.98	0.00	85	0.013	103	104	232.6	-0.16	0.66	15.6	98.6	175.3	171.8	76.4	175.0	125	83	83	83		1.001	5.476	541
372	60.298	61.534		0.16	0.17	1.31	1.09	0.26	97	96	83	1.97	0.00	85	0.015	96	97	232.5	0.05	0.62	15.4	98.5	175.1	171.6	76.4	174.8	124	83	83	83		1.001	5.151	508
373	60.461	61.700		0.16	0.17	1.31	1.09	0.26	97	96	82	1.98	0.00	85	0.015	96	97	232.6	-0.07	0.74	15.4	98.3	175.0	171.5	76.4	174.7	124	83	83	82		1.001	6.126	603
374	60.624	61.866		0.16	0.17	1.31	1.09	0.26	97	96	83	1.98	0.00	85	0.014	100	100	232.6	0.04	0.66	15.4	98.3	174.8	171.4	76.3	174.6	124	83	83	83		1.001	5.475	539
375	60.786	62.032		0.16	0.17	1.31	1.10	0.26	97	96	82	1.97	0.00	85	0.013	103	104	232.5	0.10	0.62	15.5	98.1	174.7	171.2	76.4	174.5	123	83	83	82		1.001	5.152	506
376	60.949	62.198		0.16	0.17	1.31	1.10	0.26	97	96	83	1.98	0.00	85	0.014	100	100	232.7	-0.20	0.68	15.5	98.0	174.6	171.1	76.3	174.3	123	83	83	83		1.001	5.638	553
377	61.111	62.364		0.16	0.17	1.30	1.10	0.26	97	96	82	1.98	0.00	85	0.014	99	100	232.6	0.10	0.64	15.5	97.9	174.5	171.0	76.3	174.2	123	83	83	82		1.001	5.317	521
378	61.273	62.530		0.16	0.17	1.31	1.09	0.26	97	96	82	1.97	0.00	85	0.014	99	100	232.5	0.04	0.64	15.4	97.7	174.3	170.8	76.3	174.0	123	83	83	82		1.001	5.316	520
379	61.435	62.696		0.16	0.17	1.31	1.09	0.26	97	96	82	1.98	0.00	85	0.014	99	100	232.6	-0.08	0.62	15.5	97.6	174.2	170.7	76.3	173.9	123	83	83	82		1.001	5.162	504
380	61.598	62.863		0.16	0.17	1.31	1.09	0.26	97	96	82	1.99	0.00	85	0.015	96	97	232.6	0.03	0.70	15.5	97.4	174.0	170.5	76.3	173.8	122	83	83	82		1.001	5.800	566
381	61.760	63.029		0.16	0.17	1.31	1.09	0.26	97	96	82	1.98	0.00	85	0.014	99	100	232.4	0.13	0.66	15.5	97.4	173.9	170.5	76.3	173.6	146	83	83	82		1.001	5.477	534
382	61.922	63.194		0.16	0.16	1.31	1.09	0.26	97	96	82	1.97	0.00	91	0.013	103	104	232.3	0.10	0.66	15.5	97.2	173.7	170.2	76.3	173.4	144	83	83	82		1.001	5.476	533
383	62.085	63.360		0.16	0.17	1.31	1.09	0.26	97	96	82	1.97	0.00	86	0.013	104	104	232.2	0.19	0.66	15.5	97.0	173.6	170.1	76.3	173.3	139	83	83	82		1.001	5.475	532
384	62.247	63.526		0.16	0.17	1.31	1.09	0.26	97	96	82	1.99	0.00	85	0.014	99	100	232.2	-0.07	0.72	15.5	96.9	173.5	170.0	76.3	173.2	135	83	83	82		1.001	5.961	578
385	62.410	63.691		0.16	0.16	1.31	1.09	0.26	97	96	82	1.98	0.00	85	0.015	96	96	232.2	0.03	0.66	15.5	96.8	173.3	169.9	76.3	173.1	133	83	83	82		1.001	5.475	530
386	62.572	63.857		0.16	0.17	1.31	1.09	0.26	97	96	82	1.98	0.00	85	0.015	96	97	232.3	-0.09	0.68	15.5	96.7	173.2	169.8	76.3	173.0	131	83	83	82		1.001	5.641	546
387	62.735	64.023		0.16	0.17	1.30	1.09	0.26	97	96	82	1.97	0.00	85	0.014	100	100	232.2	0.08	0.66	15.4	96.6	173.1	169.7	76.3	172.8	129	83	83	82		1.001	5.477	530
388	62.898	64.189		0.16	0.17	1.31	1.10	0.26	97	96	82	1.98	0.00	85	0.014	100	100	232.1	0.08	0.67	15.5	96.4	172.9	169.5	76.3	172.7	128	83	83	82		1.001	5.605	541
389	63.060	64.355		0.16	0.17	1.31	1.10	0.26	97	96	82	1.98	0.00	85	0.013	103	104	232.3	-0.22	0.62	15.5	96.4	172.8	169.4	76.2	172.6	126	83	83	82		1.001	5.154	497
390	63.223	64.521		0.16	0.17	1.31	1.09	0.26	97	96	82	1.97	0.00	85	0.015	96	97	232.3	0.08	0.60	15.5	96.2	172.7	169.3	76.2	172.5	125	83	83	82		1.001	4.991	481
391	63.385	64.687		0.16	0.17	1.31	1.10	0.26	97	96	82	1.98	0.00	85	0.014	99	100	232.3	-0.04	0.68	15.5	96.0	172.6	169.1	76.2	172.3	125	83	83	82		1.001	5.641	542
392	63.548	64.854		0.16	0.17	1.30	1.09	0.26	97	96	82	1.99	0.00	85	0.014	100	101	232.2	0.14	0.66	15.5	96.0	172.4	169.0	76.2	172.1	124	83	83	82		1.001	5.476	526
393	63.711	65.020		0.16	0.17	1.30	1.09	0.26	97	96	82	1.98	0.00	85	0.013	103	104	232.2	-0.06	0.64	15.5	95.8	172.3	168.9	76.2	172.0	124	83	83	82		1.001	5.314	510
394	63.873	65.187		0.16	0.17	1.30	1.09	0.26	97	96	82	1.97	0.00	85	0.013	103	105	232.1	0.07	0.60	15.5	95.7	172.1	168.7	76.2	171.9	123	83	83	82		1.001	4.991	478
395	64.036	65.352		0.16	0.17	1.30	1.10	0.26	97	96	82	1.98	0.00	85	0.016	93	93	232.2	-0.04	0.62	15.6	95.6	172.0	168.7	76.2	171.8	123	83	83	82		1.001	5.153	493
396	64.199	65.518		0.16	0.17	1.30	1.09	0.26	97	96	82	1.99	0.00	85	0.015	96	97	232.1	0.10	0.62	15.5	95.4	171.8	168.5	76.2	171.6	123	83	83	82		1.001	5.153	492
397	64.361	65.684		0.16	0.17	1.31	1.09	0.26	97	96	82	1.98	0.00	85	0.014	99	100	232.2	-0.17	0.64	15.5	95.3	171.7	168.4	76.1	171.5	122	83	83	82		1.001	5.314	507
398	64.524	65.850		0.16	0.17	1.31	1.09	0.26	97	96	82	1.98	0.00	85	0.014	100	100	232.2	0.02	0.66	15.5	95.2	171.6	168.2	76.2	171.4	122	83	83	82		1.001	5.501	524
399	64.686	66.016		0.16	0.17	1.31	1.09	0.26	96	96	82	1.99	0.00	85	0.013	103	104	232.2	0.03	0.66	15.5	95.0	171.5	168.1	76.2	171.2	121	83	83	82		1.001	5.476	521
400	64.849	66.182		0.16	0.17	1.31	1.09	0.26	96	96	82	1.97	0.00	85	0.014	100	100	232.1	0.10	0.66	15.5	94.8	171.3	167.9	76.1	171.0	121	83	83	82		1.001	5.476	520
401	65.011	66.348		0.16	0.17	1.31	1.10	0.26	97	96	82	1.98	0.00	85	0.014	99	100	232.2	-0.14	0.64	15.5	94.8	171.2	167.8	76.1	170.9	121	83	83	82		1.001	5.317	505
402	65.173	66.514		0.16	0.17	1.31	1.10	0.26	96	96	82	1.98	0.00	85	0.013	103	104	232.2	0.08	0.64	15.5	94.7	171.1	167.7	76.1	170.8	120	83	83	82		1.001	5.315	504
403	65.335	66.680		0.16	0.17	1.31	1.09	0.26	96	95	82	1.99	0.00	85	0.014	99	100	232.1	0.08	0.66	15.5	94.5	170.9	167.5	76.2	170.6	120	83	83	82		1.001	5.479	518
404	65.498	66.846		0.16	0.17	1.31	1.10	0.26	96	95	82	1.99	0.00	85	0.014	100	100	232.2	-0.13	0.70	15.5	94.4	170.8	167.4	76.1	170.5	120	83	83	82		1.001	5.800	548
405	65.660	67.013		0.16	0.17	1.31	1.09	0.26	96	95	82	1.98	0.00	85	0.014	99	101	232.2	0.02	0.62	15.5	94.2	170.6	167.2	76.2	170.4	120	83	83	82		1.001	5.154	486
406	65.823	67.179		0.16	0.17	1.31	1.09	0.26	96	95	82	1.99	0.00	85	0.014	100	100	232.2	-0.01	0.60	15.4	94.1	170.5	167.1	76.1	170.2	120	83	83	82		1.001	4.993	470
407	65.986	67.345		0.16	0.17	1.31	1.10	0.26	96	95	82	1.98	0.00	85	0.014	100	100	232.3	-0.14	0.68	15.5	94.0	170.4	167.0	76.1	170.1	120	83	83	82		1.001	5.648	531
408	66.148	67.511		0.16	0.17	1.31	1.09	0.26	96	95	82	1.98	0.00	85	0.014	99	100	232.3	0.07	0.63	15.5	93.9	170.3	166.9	76.1	170.0	120	83	83	82		1.001	5.210	490
409	66.310	67.677		0.16	0.17	1.31	1.09	0.26	96	95	82	1.98	0.00	85	0.013	103	104	232.2	0.02	0.70	15.4	93.7	170.1	166.6	76.1	169.9	120	83	83	82		1.001	5.842	548
410	66.473	67.843		0.16	0.17	1.31	1.09	0.26	96	95	82	1.99	0.00	85	0.014	100	100	232.3	-0.04	0.66	15.5	93.6	170.0	166.5	76.1	169.7	119	83	83	82		1.001	5.478	513
411	66.635	68.009		0.16	0.17	1.31	1.09	0.26	96	95	82	1.98	0.00	85	0.014	99	100	232.2	0.07	0.68	15.6	93.5	169.8	166.4	76.1	169.6	119	83	83	82		1.001	5.640	528
412	66.798	68.174		0.16	0.17	1.30	1.09	0.26	96	95	82	1.98	0.00	86	0.014	100	100	232.1	0.09	0.68	15.4	93.3	169.6	166.2	76.1	169.4	141	83	83	82		1.001	5.641	527
413	66.960	68.340		0.16	0.17	1.31	1.09	0.26	96	95	82	1.99	0.00	89	0.014	100	101	232.0	0.12	0.74	15.6	93.2	169.5	166.1	76.1	169.3	139	83	83	82		1.001	6.127	572
414	67.123	68.506		0.16	0.17	1.31	1.09	0.26	96	95	82	1.97	0.00	86	0.015	97	97	232.1	-0.06	0.64	15.5	93.0	169.3	165.9	76.1	169.1	134	83	83	82		1.001	5.318	495
415	67.285	68.672		0.16	0.17	1.31	1.10	0.26	96	95	82	1.99	0.00	85	0.014	99	100	232.0	0.10	0.66	15.4	92.9	169.2	165.8	76.1	169.0	131	83	83	82		1.001	5.481	510
416	67.448	68.838		0.16	0.17	1.31	1.09	0.26	96	95	82	1.97	0.00	85	0.013	104	104	232.1	-0.14	0.66	15.5	92.9	169.1	165.7	76.0	168.9	128	83	83	82		1.001	5.478	509
417	67.610	69.004		0.16	0.17	1.30	1.10	0.26	96	95	82	1.97	0.00	85	0.013	103	104	232.0	0.09	0.68	15.5	92.7	169.0	165.6	76.1	168.8	127	82	83	82		1.001	5.636	523
418	67.773	69.170		0.16	0.17	1.30	1.09	0.26	96	95	82	1.98	0.00	84	0.012	108	108	232.1	-0.09	0.68	15.5	92.5	168.8	165.5	76.1	168.6	125	82	83	82		1.001	5.641	522
419	67.936	69.337		0.16	0.17	1.30	1.09	0.26	96	95	82	1.98	0.00	85	0.013	104	105	231.9	0.16	0.70	15.5	92.4	168.7	165.3	76.0	168.5	124	82	83	82		1.001	5.805	537
420	68.098	69.503		0.16	0.17	1.31	1.09	0.26	96	95	82	1.98	0.00	84	0.014	99	100	232.0	-0.09	0.66	15.5	92.3	168.6	165.2	76.0	168.4	122	82	83	82		1.001	5.480	507
421	68.261	69.668		0.16	0.17	1.30	1.09	0.26	96	95	82	1.97	0.00	84	0.014	100	100	231.9	0.16	0.68	15.5	92.2	168.5	165.1	76.1	168.2	122	82	83	82		1.001	5.640	520
422	68.423	69.835		0.16	0.17	1.31	1.09	0.26	96	95	82	1.98	0.00	84	0.015	96	97	231.9	-0.01	0.70	15.5	92.0	168.3	164.9	76.0	168.0	121	82	83	82		1.001	5.802	534
423	68.585	70.000		0.16	0.17	1.31	1.09	0.26	96	95	82	1.98	0.00	84	0.014	99	100	231.9	-0.06	0.66	15.6	91.9	168.2	164.8	76.0	167.9	121	82	82	82		1.001	5.480	504
424	68.748	70.166		0.16	0.17	1.31	1.09	0.26	96	95	82	1.99	0.00	84	0.016	93	94	232.0	-0.03	0.72	15.4	91.8	168.1	164.7	76.0	167.8	120	82	82	82		1.001	5.966	549

Elapsed Time	Particulate Sampling Data																	Fuel Weight, lb		Flow, gpm		Temperature Data, oF													
	Gas Meter Cubic Feet (1)	Gas Meter Cubic Feet (2)	Gas Meter Cubic Feet (amb)	Sample Rate, cfm (1)	Sample Rate, cfm (2)	Orifice dH (1)	Orifice dH (2)	Orifice dH (amb)	Meter oF (1)	Meter oF (2)	Meter oF (amb)	Meter Vac. In. Hg. (1)	Meter Vac. In. Hg. (2)	Dilution Tunnel Temp.	Dilution Tunnel dP	Pro. Rate (%) (1)	Pro. Rate (%) (2)	Scale Reading	Weight Change	Load Side Liquid Flow Rate	Boiler Side Liquid Flow Rate (optional)	Thermopile ΔT	Boiler to Heat Exch. Temp.	Heat Exch to Boiler Temp.	Inlet Load Temp.	Outlet Load Temp.	Stack	Filter (1)	Filter (2)	Ambient		Specific Heat of Inlet Water (BTU/lb-°F)	Mass Flow Rate of Inlet Water (lb/min)	Heat Output, Btu
425	68.911	70.332		0.16	0.17	1.31	1.09	0.26	96	95	82	1.99	0.00	84	0.015	96	97	232.0	-0.02	0.60	15.5	91.7	167.9	164.6	76.0	167.7	120	82	82	82		1.001	4.996	458
426	69.073	70.498		0.16	0.17	1.31	1.10	0.26	96	95	82	1.97	0.00	84	0.015	96	97	232.0	0.02	0.66	15.5	91.6	167.7	164.4	76.0	167.5	119	82	82	82		1.001	5.479	502
427	69.235	70.663		0.16	0.16	1.30	1.09	0.26	96	95	82	1.98	0.00	84	0.013	103	103	232.1	-0.11	0.68	15.4	91.4	167.6	164.3	76.0	167.4	119	82	82	82		1.001	5.643	516
428	69.397	70.830		0.16	0.17	1.31	1.10	0.26	96	95	82	1.99	0.00	84	0.015	96	97	231.9	0.16	0.68	15.5	91.2	167.4	164.1	76.0	167.2	118	82	82	82		1.001	5.663	517
429	69.560	70.995		0.16	0.17	1.31	1.09	0.26	96	95	82	1.97	0.00	84	0.015	96	96	232.0	-0.06	0.67	15.5	91.1	167.3	164.0	76.0	167.1	118	82	82	82		1.001	5.568	508
430	69.722	71.162		0.16	0.17	1.31	1.09	0.26	96	95	82	1.98	0.00	84	0.014	99	101	232.0	-0.01	0.66	15.5	91.1	167.3	163.9	75.9	167.0	118	82	82	82		1.001	5.480	500
431	69.884	71.328		0.16	0.17	1.31	1.09	0.26	96	95	82	1.97	0.00	84	0.014	99	100	232.0	-0.03	0.70	15.5	90.9	167.0	163.7	76.0	166.8	118	82	82	82		1.001	5.804	528
432	70.047	71.494		0.16	0.17	1.30	1.09	0.26	96	95	82	1.97	0.00	84	0.014	100	100	231.9	0.11	0.70	15.5	90.7	166.9	163.6	76.0	166.7	118	82	82	82		1.001	5.806	527
433	70.210	71.660		0.16	0.17	1.31	1.09	0.26	96	95	82	1.97	0.00	84	0.013	104	104	232.0	-0.12	0.66	15.5	90.6	166.8	163.5	75.9	166.6	117	82	82	82		1.001	5.481	497
434	70.372	71.826		0.16	0.17	1.31	1.09	0.26	96	95	81	1.98	0.00	84	0.014	99	100	231.9	0.10	0.68	15.5	90.5	166.7	163.4	76.0	166.5	117	82	82	81		1.001	5.645	511
435	70.534	71.992		0.16	0.17	1.31	1.09	0.26	96	95	82	1.98	0.00	84	0.014	99	100	231.9	0.04	0.70	15.5	90.3	166.5	163.2	75.9	166.3	117	82	82	82		1.001	5.806	525
436	70.697	72.158		0.16	0.17	1.31	1.09	0.26	96	95	82	1.98	0.00	84	0.014	100	100	232.0	-0.09	0.68	15.4	90.2	166.4	163.1	75.9	166.2	116	82	82	82		1.001	5.653	511
437	70.860	72.323		0.16	0.16	1.31	1.09	0.26	96	95	82	1.98	0.00	84	0.014	100	100	231.9	0.09	0.71	15.5	90.2	166.3	163.0	75.9	166.1	116	82	82	82		1.001	5.923	535
438	71.022	72.489		0.16	0.17	1.31	1.09	0.26	96	95	82	1.99	0.00	84	0.013	103	104	232.0	-0.07	0.60	15.5	90.0	166.1	162.8	75.9	165.9	116	82	82	82		1.001	4.995	450
439	71.185	72.655		0.16	0.17	1.31	1.09	0.26	96	95	82	1.99	0.00	84	0.014	100	100	232.1	-0.12	0.61	15.5	89.9	166.0	162.7	75.9	165.8	116	82	82	82		1.001	5.101	459
440	71.347	72.821		0.16	0.17	1.31	1.09	0.26	96	95	82	1.99	0.00	84	0.013	103	104	231.9	0.17	0.70	15.5	89.8	165.8	162.6	75.9	165.6	115	82	82	82		1.001	5.807	522
441	71.509	72.987		0.16	0.17	1.31	1.09	0.26	96	95	82	1.98	0.00	84	0.013	103	104	232.1	-0.20	0.64	15.4	89.6	165.7	162.5	75.9	165.5	116	82	82	82		1.001	5.322	477
442	71.672	73.153		0.16	0.17	1.31	1.09	0.26	96	95	81	1.97	0.00	84	0.013	104	104	231.9	0.20	0.66	15.5	89.5	165.6	162.3	75.9	165.4	115	82	82	81		1.001	5.482	491
443	71.835	73.319		0.16	0.17	1.30	1.09	0.26	96	95	82	1.99	0.00	86	0.014	100	100	231.9	0.00	0.66	15.5	89.3	165.4	162.2	75.9	165.2	137	82	82	82		1.001	5.483	490
444	71.997	73.485		0.16	0.17	1.30	1.09	0.26	96	95	81	1.97	0.00	87	0.013	103	104	231.8	0.07	0.66	15.5	89.2	165.3	162.1	75.9	165.0	135	82	82	81		1.001	5.483	489
445	72.160	73.652		0.16	0.17	1.30	1.09	0.26	96	95	81	1.98	0.00	85	0.015	96	98	231.7	0.09	0.66	15.5	89.1	165.1	161.9	75.8	164.9	131	82	82	81		1.001	5.489	490
446	72.322	73.817		0.16	0.16	1.31	1.10	0.26	96	95	81	1.98	0.00	84	0.016	93	93	231.8	-0.04	0.62	15.5	88.9	165.0	161.8	75.8	164.8	127	82	82	81		1.001	5.159	459
447	72.485	73.983		0.16	0.17	1.30	1.09	0.26	96	95	82	1.99	0.00	84	0.013	104	104	231.6	0.14	0.64	15.5	88.8	164.9	161.6	75.8	164.6	125	82	82	82		1.001	5.323	473
448	72.647	74.149		0.16	0.17	1.31	1.09	0.26	96	95	81	1.97	0.00	84	0.014	99	100	231.8	-0.11	0.68	15.5	88.6	164.7	161.5	75.9	164.5	123	82	82	81		1.001	5.681	504
449	72.810	74.315		0.16	0.17	1.31	1.09	0.26	96	95	82	1.99	0.00	84	0.014	100	100	231.7	0.01	0.66	15.5	88.6	164.6	161.4	75.8	164.4	122	82	82	82		1.001	5.493	487
450	72.972	74.481		0.16	0.17	1.31	1.09	0.26	96	95	81	1.98	0.00	84	0.013	103	104	231.7	0.04	0.60	15.5	88.5	164.5	161.3	75.8	164.3	120	82	82	81		1.001	4.996	442
451	73.135	74.647		0.16	0.17	1.31	1.09	0.26	96	95	81	1.99	0.00	84	0.014	100	100	231.6	0.10	0.64	15.4	88.2	164.3	161.1	75.9	164.1	120	82	82	81		1.001	5.320	470
452	73.297	74.812		0.16	0.16	1.31	1.10	0.26	96	95	81	1.99	0.00	84	0.014	99	100	231.6	-0.03	0.68	15.6	88.2	164.2	161.0	75.8	164.0	119	82	82	81		1.001	5.645	498
453	73.459	74.979		0.16	0.17	1.30	1.10	0.26	95	95	81	1.97	0.00	84	0.015	96	97	231.7	-0.11	0.68	15.5	88.1	164.0	160.9	75.8	163.9	118	82	82	81		1.001	5.647	498
454	73.621	75.145		0.16	0.17	1.31	1.09	0.26	95	95	81	1.99	0.00	84	0.015	96	97	231.7	0.06	0.68	15.5	87.9	163.9	160.7	75.8	163.7	118	82	82	81		1.001	5.646	497
455	73.784	75.311		0.16	0.17	1.32	1.09	0.26	95	95	81	1.99	0.00	84	0.013	104	104	231.6	0.06	0.68	15.5	87.8	163.8	160.6	75.8	163.6	118	82	82	81		1.001	5.643	496
456	73.946	75.477		0.16	0.17	1.31	1.09	0.26	95	95	81	1.98	0.00	84	0.013	103	104	231.6	0.05	0.66	15.4	87.7	163.7	160.6	75.8	163.5	117	82	82	81		1.001	5.483	481
457	74.109	75.643		0.16	0.17	1.31	1.09	0.26	95	95	81	1.97	0.00	84	0.014	100	100	231.7	-0.10	0.70	15.5	87.6	163.6	160.4	75.8	163.4	117	82	82	81		1.001	5.787	507
458	74.271	75.809		0.16	0.17	1.31	1.10	0.26	95	95	81	1.98	0.00	84	0.016	93	94	231.6	0.09	0.66	15.4	87.4	163.4	160.3	75.8	163.2	116	82	82	81		1.001	5.483	480
459	74.434	75.975		0.16	0.17	1.31	1.09	0.26	95	95	81	1.97	0.00	83	0.014	100	100	231.8	-0.18	0.62	15.4	87.4	163.3	160.2	75.7	163.1	116	82	82	81		1.001	5.160	451
460	74.596	76.141		0.16	0.17	1.31	1.09	0.26	95	95	81	1.99	0.00	83	0.013	103	104	231.7	0.10	0.70	15.5	87.2	163.1	160.0	75.7	162.9	116	82	82	81		1.001	5.808	507
461	74.758	76.307		0.16	0.17	1.31	1.09	0.26	95	95	81	1.98	0.00	84	0.014	99	100	231.7	-0.06	0.66	15.5	87.1	163.0	159.9	75.7	162.8	116	82	82	81		1.001	5.484	478
462	74.921	76.473		0.16	0.17	1.31	1.09	0.26	95	95	81	1.98	0.00	84	0.013	104	104	231.7	0.03	0.70	15.5	86.9	162.9	159.8	75.7	162.7	115	82	82	81		1.001	5.808	505
463	75.084	76.639		0.16	0.17	1.30	1.10	0.26	95	95	81	1.99	0.00	83	0.014	100	100	231.7	0.02	0.68	15.5	86.9	162.8	159.7	75.7	162.6	115	82	82	81		1.001	5.648	491
464	75.246	76.805		0.16	0.17	1.31	1.09	0.26	95	95	81	1.98	0.00	83	0.013	103	104	231.6	0.05	0.70	15.5	86.7	162.6	159.5	75.7	162.4	115	82	82	81		1.001	5.809	504
465	75.408	76.971		0.16	0.17	1.31	1.09	0.26	95	94	81	1.98	0.00	85	0.014	99	101	231.6	0.01	0.64	15.5	86.5	162.5	159.3	75.7	162.2	135	82	82	81		1.001	5.325	461
466	75.571	77.136		0.16	0.16	1.31	1.09	0.26	95	94	81	1.98	0.00	92	0.014	101	101	231.5	0.09	0.68	15.4	86.3	162.3	159.2	75.7	162.1	146	82	82	81		1.001	5.647	488
467	75.733	77.301		0.16	0.17	1.30	1.09	0.26	95	94	81	1.98	0.00	93	0.015	97	97	231.1	0.41	0.65	15.4	86.3	162.2	159.1	75.7	162.0	154	82	82	81		1.001	5.365	463
468	75.895	77.467		0.16	0.17	1.31	1.09	0.26	95	94	81	1.98	0.00	94	0.015	97	98	230.7	0.39	0.64	15.4	86.2	162.0	158.9	75.7	161.8	161	82	82	81		1.001	5.323	459
469	76.058	77.634		0.16	0.17	1.31	1.09	0.26	95	94	81	1.99	0.00	95	0.014	101	102	230.4	0.33	0.63	15.4	86.1	162.1	158.9	75.7	161.8	168	82	82	81		1.001	5.198	448
470	76.220	77.799		0.16	0.17	1.31	1.09	0.26	95	94	81	2.00	0.00	96	0.016	94	94	229.9	0.45	0.64	15.4	86.1	162.1	158.9	75.7	161.8	178	82	83	81		1.001	5.323	459
471	76.382	77.965		0.16	0.17	1.30	1.10	0.26	95	94	81	1.99	0.00	98	0.012	109	110	229.3	0.61	0.66	15.5	86.2	162.2	159.0	75.7	161.8	186	82	83	81		1.001	5.483	473
472	76.545	78.130		0.16	0.16	1.31	1.09	0.26	95	94	81	2.00	0.00	99	0.014	101	101	228.7	0.59	0.66	15.5	86.5	162.6	159.4	75.7	162.2	195	83	83	81		1.001	5.486	475
473	76.707	78.295		0.16	0.17	1.31	1.10	0.26	95	94	81	2.00	0.00	101	0.015	97	98	228.1	0.60	0.62	15.4	87.0	163.1	159.9	75.7	162.7	205	83	83	81		1.001	5.158	449
474	76.868	78.460		0.16	0.16	1.30	1.10	0.26	95	94	81	2.00	0.00	104	0.014	100	102	227.7	0.48	0.64	15.5	87.7	163.8	160.5	75.6	163.3	215	83	83	81		1.001	5.324	467
475	77.030	78.625		0.16	0.17	1.31	1.10	0.26	95	94	81	1.99	0.00	107	0.014	101	102	227.0	0.68	0.68	15.5	88.3	164.5	161.2	75.7	164.0	223	83	84	81		1.001	5.641	499
476	77.192	78.791		0.16	0.17	1.31	1.10	0.26	95	94	81	1.99	0.00	109	0.015	98	99	226.2	0.80	0.71	15.5	89.1	165.2	161.9	75.6	164.7	230	83	84	81		1.001	5.939	530
477	77.354	78.956		0.16	0.17	1.31	1.10	0.26	95	94	81	1.99	0.00	111	0.013	106	106	225.5	0.66	0.67	15.5	89.8	166.0	162.7	75.7	165.5	237	84	84	81		1.001	5.600	503
478	77.515	79.121		0.16	0.16	1.31	1.10	0.26	95	94	81	1.99	0.00	112	0.016	95	96	224.9	0.61	0.62	15.4	90.6	166.8	163.4	75.7	166.3	243	84	84	81		1.001	5.160	468
479	77.677	79.286		0.16	0.17	1.31	1.09	0.26	95	94	81	2.00	0.00	113	0.014	102	102	224.1	0.75	0.64	15.5	91.5	167.6	164.3	75.6	167.1	248	84	85	81		1.001	5.323	487
480	77.839	79.451		0.16	0.16	1.31	1.09	0.26	95	94	81	2.00	0.00	114	0.016	95	96	223.5	0.67	0.68	15.5	92.3	168.4	165.0	75.6	167.9	251	85	85	81		1.001	5.647	522
481	78.000	79.616		0.16	0.17	1.31	1.09	0.26	95	94	81	2.00	0.00	115	0.015	98	99	222.6	0.84	0.66	15.4	93.3	169.5	166.1	75.7	169.0	255	85	85	81		1.001	5.483	512
482	78.162	79.780		0.16	0.16	1.31	1.09	0.26	95	94	81	2.01	0.00	116	0.014	102	102	221.9	0.78	0.74	15.5	94.3	170.5	167.0	75.7	170.0	258	85	85	81		1.001	6.130	579
483	78.323	79.944		0.16	0.16	1.31	1.09	0.26	95	94	81	2.02	0.00	117	0.015	98	99	221.1	0.72	0.68	15.5	95.2	171.4	167.9	75.7	170.9	260	85	86	81		1.001	5.645	538
484	78.484	80.109		0.16	0.16	1.31	1.09	0.26	95	94	81	2.02	0.00	118	0.015	98	99	220.4	0.72	0.70	15.4	96.2	172.3	168.7	75.6	171.8	263	86	86	81		1.001	5.809	559
485	78.646	80.274		0.16	0.17	1.31	1.09	0.26	95	94	81	2.01	0.00	118	0.012	111	111	219.6	0.87	0.68	15.5	97.2	173.4	169.7	75.6	172.8	265	86	86	81		1.001	5.652	550
486	78.807	80.439		0.16	0.16	1.30	1.09	0.26	95	94	81	2.01	0.00	119	0.015	98	100	218.9	0.70	0.71	15.5	98.4	174.6	170.9	75.6	174.0	267	86	87	81		1.001	5.928	584

Elapsed Time	Particulate Sampling Data																	Fuel Weight, lb		Flow, gpm		Temperature Data, oF													
	Gas Meter Cubic Feet (1)	Gas Meter Cubic Feet (2)	Gas Meter Cubic Feet (amb)	Sample Rate, cfm (1)	Sample Rate, cfm (2)	Orifice dH (1)	Orifice dH (2)	Orifice dH (amb)	Meter oF (1)	Meter oF (2)	Meter oF (amb)	Meter Vac. In. Hg. (1)	Meter Vac. In. Hg. (2)	Dilution Tunnel Temp.	Dilution Tunnel dP	Pro. Rate (%) (1)	Pro. Rate (%) (2)	Scale Reading	Weight Change	Load Side Liquid Flow Rate	Boiler Side Liquid Flow Rate (optional)	Thermopile ΔT	Boiler to Heat Exch. Temp.	Heat Exch to Boiler Temp.	Inlet Load Temp.	Outlet Load Temp.	Stack	Filter (1)	Filter (2)	Ambient		Specific Heat of Inlet Water (BTU/lb-°F)	Mass Flow Rate of Inlet Water (lb/min)	Heat Output, Btu
487	78.968	80.603		0.16	0.16	1.30	1.09	0.26	95	94	81	2.02	0.00	118	0.015	98	99	217.9	0.93	0.73	15.5	99.4	175.6	171.9	75.6	175.0	268	86	87	81		1.001	6.045	602
488	79.129	80.766		0.16	0.16	1.30	1.08	0.26	95	94	81	2.02	0.00	119	0.014	102	102	217.1	0.77	0.68	15.4	100.4	176.6	172.8	75.6	176.0	270	86	87	81		1.001	5.645	568
489	79.290	80.930		0.16	0.16	1.30	1.09	0.26	95	94	81	2.02	0.00	120	0.014	102	102	216.4	0.74	0.74	15.4	101.5	177.7	173.9	75.6	177.1	272	87	87	81		1.001	6.131	623
490	79.451	81.094		0.16	0.16	1.30	1.08	0.26	95	94	81	2.03	0.00	121	0.015	99	99	215.5	0.93	0.64	15.4	102.6	178.7	174.8	75.6	178.2	275	87	88	81		1.001	5.322	547
491	79.612	81.258		0.16	0.16	1.30	1.08	0.26	95	94	81	2.02	0.00	122	0.015	99	99	214.7	0.80	0.70	15.5	103.8	180.1	176.2	75.6	179.4	277	87	88	81		1.001	5.808	603
492	79.773	81.422		0.16	0.16	1.30	1.08	0.26	95	94	81	2.03	0.00	122	0.015	99	99	214.0	0.66	0.72	15.4	105.0	181.2	177.2	75.6	180.6	278	87	88	81		1.001	5.969	627
493	79.933	81.585		0.16	0.16	1.30	1.07	0.26	95	94	81	2.03	0.00	122	0.015	98	99	213.1	0.89	0.72	15.5	106.0	182.2	178.3	75.6	181.6	278	88	88	81		1.001	5.967	633
494	80.094	81.749		0.16	0.16	1.30	1.08	0.26	95	94	81	2.02	0.00	106	0.012	109	109	212.3	0.80	0.70	15.5	107.2	183.4	179.3	75.6	182.8	254	86	87	81		1.001	5.803	623
495	80.256	81.912		0.16	0.16	1.30	1.07	0.26	95	94	81	2.02	0.00	98	0.014	101	100	212.2	0.11	0.70	15.5	107.9	183.9	179.9	75.5	183.5	238	86	87	81		1.001	5.787	625
496	80.417	82.076		0.16	0.16	1.30	1.08	0.26	95	94	81	2.02	0.00	93	0.014	100	100	212.1	0.10	0.68	15.5	108.1	184.1	180.1	75.6	183.7	230	85	86	81		1.001	5.688	616
497	80.579	82.241		0.16	0.17	1.30	1.08	0.26	95	94	81	2.00	0.00	91	0.013	104	104	211.7	0.39	0.68	15.4	108.4	184.4	180.4	75.6	184.0	223	84	85	81		1.001	5.676	616
498	80.741	82.406		0.16	0.17	1.30	1.08	0.26	95	94	81	2.01	0.00	91	0.015	97	97	211.6	0.12	0.66	15.4	108.6	184.5	180.5	75.5	184.1	215	84	85	81		1.001	5.463	594
499	80.902	82.571		0.16	0.16	1.30	1.08	0.26	95	94	81	1.99	0.00	90	0.015	96	97	211.4	0.22	0.68	15.5	108.7	184.6	180.6	75.5	184.2	210	84	85	81		1.001	5.645	614
500	81.064	82.736		0.16	0.17	1.30	1.08	0.26	95	94	81	2.01	0.00	89	0.014	100	100	211.5	-0.09	0.72	15.5	108.8	184.7	180.7	75.5	184.3	206	84	85	81		1.001	5.971	650
501	81.226	82.901		0.16	0.16	1.30	1.08	0.26	95	94	81	2.00	0.00	88	0.014	100	100	211.4	0.10	0.68	15.5	108.9	184.8	180.8	75.5	184.4	203	83	85	81		1.001	5.646	616
502	81.388	83.066		0.16	0.17	1.30	1.09	0.26	95	94	81	2.00	0.00	88	0.014	100	100	211.4	0.01	0.72	15.5	108.9	184.9	180.8	75.5	184.5	199	83	84	81		1.001	5.967	651
503	81.550	83.232		0.16	0.17	1.30	1.09	0.26	95	94	81	1.99	0.00	87	0.013	103	105	211.4	-0.01	0.68	15.4	109.0	184.9	180.8	75.5	184.5	198	83	84	81		1.001	5.645	616
504	81.712	83.397		0.16	0.17	1.30	1.09	0.26	95	94	81	1.98	0.00	86	0.015	96	97	211.2	0.17	0.70	15.5	109.1	184.9	180.9	75.5	184.5	197	83	84	81		1.001	5.813	635
505	81.874	83.563		0.16	0.17	1.30	1.09	0.26	95	94	81	2.00	0.00	86	0.014	99	101	211.2	-0.02	0.67	15.4	109.1	184.9	180.9	75.5	184.5	195	83	84	81		1.001	5.600	611
506	82.036	83.728		0.16	0.16	1.30	1.09	0.26	95	94	81	1.98	0.00	85	0.016	93	93	211.1	0.11	0.71	15.5	109.0	184.9	180.8	75.5	184.5	192	83	84	81		1.001	5.937	648
507	82.198	83.894		0.16	0.17	1.30	1.09	0.26	95	94	81	1.98	0.00	85	0.012	107	109	211.3	-0.19	0.65	15.5	109.1	184.9	180.9	75.5	184.5	190	83	84	81		1.001	5.440	594
508	82.360	84.060		0.16	0.17	1.30	1.09	0.26	95	94	81	1.99	0.00	85	0.013	103	104	211.4	-0.07	0.66	15.4	109.1	184.9	180.9	75.4	184.5	187	83	84	81		1.001	5.481	599
509	82.522	84.225		0.16	0.16	1.30	1.09	0.26	94	94	81	1.99	0.00	85	0.015	96	97	211.2	0.17	0.70	15.5	109.0	184.8	180.8	75.5	184.5	185	83	83	81		1.001	5.809	634
510	82.684	84.391		0.16	0.17	1.30	1.08	0.26	94	94	81	1.99	0.00	85	0.013	103	104	211.2	0.01	0.72	15.4	109.1	184.8	180.8	75.4	184.5	183	82	83	81		1.001	5.971	652
511	82.846	84.556		0.16	0.16	1.31	1.09	0.26	94	94	81	1.98	0.00	85	0.016	93	93	211.2	0.03	0.68	15.5	109.0	184.8	180.8	75.5	184.5	181	82	83	81		1.001	5.649	617
512	83.008	84.721		0.16	0.17	1.30	1.09	0.26	94	94	81	1.99	0.00	85	0.016	93	93	211.2	-0.01	0.68	15.5	108.9	184.7	180.7	75.4	184.4	178	82	83	81		1.001	5.647	616
513	83.170	84.887		0.16	0.17	1.30	1.09	0.26	94	94	81	1.98	0.00	85	0.014	100	101	211.3	-0.07	0.70	15.5	108.9	184.7	180.7	75.4	184.3	176	82	83	81		1.001	5.808	633
514	83.332	85.052		0.16	0.17	1.30	1.09	0.26	94	94	81	2.00	0.00	85	0.014	100	100	211.3	-0.04	0.70	15.5	108.9	184.7	180.7	75.4	184.3	174	82	83	81		1.001	5.811	634
515	83.494	85.218		0.16	0.17	1.31	1.09	0.26	94	94	81	2.00	0.00	85	0.015	96	97	211.1	0.16	0.66	15.5	108.9	184.6	180.6	75.4	184.3	172	82	83	81		1.001	5.472	596
516	83.657	85.383		0.16	0.16	1.31	1.09	0.26	94	94	81	2.00	0.00	84	0.013	104	104	211.2	-0.10	0.62	15.4	108.9	184.6	180.7	75.4	184.3	171	82	83	81		1.001	5.162	563
517	83.819	85.549		0.16	0.17	1.30	1.09	0.26	94	94	81	1.98	0.00	84	0.015	96	97	211.2	0.04	0.68	15.5	108.8	184.5	180.5	75.4	184.2	169	82	83	81		1.001	5.685	619
518	83.981	85.715		0.16	0.17	1.31	1.09	0.26	94	94	81	1.99	0.00	84	0.015	96	97	211.3	-0.07	0.64	15.5	108.8	184.5	180.5	75.4	184.2	167	82	83	81		1.001	5.322	580
519	84.143	85.880		0.16	0.16	1.30	1.09	0.26	94	94	81	2.00	0.00	84	0.016	93	93	211.2	0.05	0.68	15.5	108.7	184.4	180.4	75.4	184.1	165	82	82	81		1.001	5.647	614
520	84.305	86.046		0.16	0.17	1.31	1.09	0.26	94	94	81	1.99	0.00	84	0.015	96	97	211.3	-0.04	0.68	15.5	108.7	184.4	180.4	75.4	184.1	164	82	82	81		1.001	5.650	615
521	84.467	86.211		0.16	0.16	1.30	1.08	0.26	94	94	81	1.98	0.00	84	0.015	96	96	211.3	-0.04	0.66	15.4	108.6	184.3	180.3	75.4	184.0	162	82	82	81		1.001	5.483	596
522	84.629	86.376		0.16	0.17	1.31	1.08	0.26	94	94	80	1.99	0.00	84	0.014	99	100	211.2	0.05	0.62	15.4	108.6	184.3	180.2	75.4	183.9	160	82	82	80		1.001	5.163	561
523	84.791	86.542		0.16	0.17	1.31	1.09	0.26	94	94	81	2.00	0.00	84	0.015	96	97	211.3	-0.02	0.70	15.4	108.5	184.2	180.2	75.3	183.9	159	82	82	81		1.001	5.809	631
524	84.952	86.707		0.16	0.16	1.30	1.09	0.26	94	94	81	1.98	0.00	84	0.015	96	96	211.3	-0.05	0.68	15.5	108.4	184.1	180.1	75.4	183.7	158	81	82	81		1.001	5.669	615
525	85.114	86.873		0.16	0.17	1.31	1.09	0.26	94	94	80	2.00	0.00	84	0.015	96	97	211.2	0.08	0.70	15.5	108.3	184.0	180.0	75.3	183.7	156	81	82	80		1.001	5.861	636
526	85.276	87.039		0.16	0.17	1.31	1.09	0.26	94	94	81	1.99	0.00	84	0.016	93	94	211.5	-0.25	0.70	15.4	108.3	183.9	179.9	75.3	183.6	155	81	82	81		1.001	5.811	630
527	85.438	87.204		0.16	0.16	1.31	1.09	0.26	94	94	80	2.00	0.00	84	0.014	99	100	211.3	0.18	0.72	15.6	108.1	183.8	179.8	75.4	183.5	154	81	82	80		1.001	5.970	646
528	85.600	87.370		0.16	0.17	1.31	1.09	0.26	94	94	80	2.00	0.00	84	0.015	96	97	211.4	-0.05	0.66	15.4	108.1	183.8	179.8	75.3	183.5	153	81	82	80		1.001	5.490	594
529	85.762	87.536		0.16	0.17	1.31	1.09	0.26	94	94	80	1.99	0.00	84	0.016	93	94	211.4	0.00	0.72	15.5	108.1	183.7	179.7	75.3	183.4	152	81	82	80		1.001	5.972	646
530	85.924	87.701		0.16	0.16	1.31	1.09	0.26	94	94	80	2.00	0.00	83	0.014	99	100	211.2	0.13	0.70	15.5	108.0	183.6	179.6	75.3	183.3	151	81	82	80		1.001	5.812	628
531	86.086	87.867		0.16	0.17	1.31	1.09	0.26	94	94	80	2.00	0.00	83	0.015	96	97	211.4	-0.15	0.70	15.5	107.9	183.5	179.5	75.3	183.2	150	81	82	80		1.001	5.810	628
532	86.248	88.032		0.16	0.16	1.31	1.09	0.26	94	93	80	1.98	0.00	83	0.015	96	97	211.3	0.12	0.68	15.5	107.8	183.4	179.5	75.3	183.1	149	81	82	80		1.001	5.650	610
533	86.411	88.198		0.16	0.17	1.31	1.09	0.26	94	93	80	2.00	0.00	84	0.014	100	101	211.4	-0.19	0.72	15.5	107.7	183.3	179.3	75.3	183.0	148	81	82	80		1.001	5.971	644
534	86.573	88.363		0.16	0.17	1.31	1.09	0.26	94	93	80	2.00	0.00	83	0.013	103	104	211.4	0.08	0.70	15.5	107.7	183.3	179.3	75.3	182.9	147	81	82	80		1.001	5.837	629
535	86.735	88.529		0.16	0.17	1.31	1.09	0.26	94	93	80	2.00	0.00	83	0.015	96	97	211.4	-0.04	0.70	15.5	107.5	183.1	179.1	75.3	182.8	146	81	81	80		1.001	5.857	631
536	86.897	88.694		0.16	0.17	1.31	1.09	0.26	94	93	80	1.99	0.00	83	0.015	96	97	211.3	0.07	0.70	15.5	107.4	183.0	179.1	75.3	182.8	145	81	81	80		1.001	5.831	627
537	87.059	88.860		0.16	0.17	1.31	1.09	0.26	94	93	80	1.99	0.00	83	0.015	96	97	211.3	-0.01	0.66	15.5	107.3	182.9	178.9	75.3	182.6	144	81	81	80		1.001	5.489	590
538	87.221	89.026		0.16	0.17	1.31	1.09	0.26	94	93	80	1.98	0.00	83	0.014	99	101	211.5	-0.13	0.68	15.4	107.2	182.8	178.8	75.3	182.5	144	81	81	80		1.001	5.651	607
539	87.383	89.192		0.16	0.17	1.31	1.09	0.26	94	93	80	1.98	0.00	83	0.014	99	101	211.4	0.03	0.66	15.5	107.1	182.7	178.8	75.3	182.4	142	81	81	80		1.001	5.489	589
540	87.545	89.357		0.16	0.17	1.31	1.09	0.26	94	93	80	2.00	0.00	83	0.015	96	97	211.4	0.02	0.68	15.5	107.0	182.6	178.6	75.3	182.3	142	81	81	80		1.001	5.650	605
541	87.707	89.523		0.16	0.17	1.31	1.08	0.26	94	93	80	1.98	0.00	83	0.014	99	101	211.4	0.00	0.64	15.4	106.9	182.4	178.5	75.3	182.1	141	81	81	80		1.001	5.326	570
542	87.869	89.688		0.16	0.17	1.30	1.09	0.26	94	93	80	1.99	0.00	83	0.014	99	100	211.5	-0.05	0.70	15.4	106.8	182.4	178.4	75.2	182.1	141	81	81	80		1.001	5.812	622
543	88.031	89.853		0.16	0.16	1.31	1.09	0.26	94	93	80	2.00	0.00	83	0.016	93	93	211.4	0.07	0.76	15.5	106.7	182.2	178.3	75.2	181.9	140	81	81	80		1.001	6.297	673
544	88.193	90.019		0.16	0.17	1.31	1.09	0.26	94	93	80	2.00	0.00	83	0.015	96	97	211.4	0.01	0.64	15.5	106.6	182.1	178.1	75.2	181.8	139	81	81	80		1.001	5.328	568
545	88.356	90.184		0.16	0.16	1.31	1.09	0.26	94	93	80	1.99	0.00	83	0.014	100	100	211.5	-0.06	0.69	15.5	106.5	182.0	178.0	75.2	181.7	139	81	81	80		1.001	5.768	615
546	88.518	90.350		0.16	0.17	1.31	1.09	0.26	94	93	80	2.00	0.00	83	0.014	99	101	211.3	0.17	0.70	15.4	106.4	181.9	177.9	75.2	181.6	138	81	81	80		1.001	5.816	619
547	88.680	90.516		0.16	0.17	1.31	1.09	0.26	94	93	80	1.98	0.00	83	0.015	96	97	211.5	-0.16	0.66	15.4	106.2	181.8	177.8	75.2	181.5	138	81	81	80		1.001	5.487	584
548	88.842	90.681		0.16	0.16	1.31	1.09	0.26	94	93	80	1.98	0.00	83	0.013	103	104	211.5	-0.05	0.72	15.4	106.1	181.7	177.6	75.2	181.3	137	81	81	80		1.001	5.975	635

Elapsed Time	Particulate Sampling Data																	Fuel Weight, lb		Flow, gpm		Temperature Data, oF												
	Gas Meter Cubic Feet (1)	Gas Meter Cubic Feet (2)	Gas Meter Cubic Feet (amb)	Sample Rate, cfm (1)	Sample Rate, cfm (2)	Orifice dH (1)	Orifice dH (2)	Orifice dH (amb)	Meter oF (1)	Meter oF (2)	Meter oF (amb)	Meter Vac. In. Hg. (1)	Meter Vac. In. Hg. (2)	Dilution Tunnel Temp.	Dilution Tunnel dP	Pro. Rate (%) (1)	Pro. Rate (%) (2)	Scale Reading	Weight Change	Load Side Liquid Flow Rate	Boiler Side Liquid Flow Rate (optional)	Thermopile ΔT	Boiler to Heat Exch. Temp.	Heat Exch to Boiler Temp.	Inlet Load Temp.	Outlet Load Temp.	Stack	Filter (1)	Filter (2)	Ambient		Specific Heat of Inlet Water (BTU/lb-°F)	Mass Flow Rate of Inlet Water (lb/min)	Heat Output, Btu
549	89.004	90.847		0.16	0.17	1.30	1.09	0.26	94	93	80	1.99	0.00	83	0.015	96	97	211.4	0.09	0.66	15.5	106.0	181.5	177.5	75.2	181.2	136	81	81	80		1.001	5.489	582
550	89.166	91.013		0.16	0.17	1.31	1.09	0.26	94	93	80	2.00	0.00	83	0.015	96	97	211.5	-0.08	0.66	15.5	105.9	181.4	177.4	75.2	181.1	135	81	81	80		1.001	5.491	582
551	89.328	91.178		0.16	0.16	1.30	1.09	0.26	94	93	80	2.00	0.00	83	0.015	96	97	211.4	0.07	0.66	15.5	105.8	181.3	177.3	75.2	181.0	135	81	81	80		1.001	5.491	581
552	89.490	91.344		0.16	0.17	1.30	1.08	0.26	94	93	80	1.99	0.00	83	0.014	99	101	211.6	-0.13	0.70	15.5	105.7	181.2	177.2	75.2	180.9	134	81	81	80		1.001	5.814	615
553	89.652	91.509		0.16	0.17	1.30	1.09	0.26	94	93	80	2.00	0.00	83	0.013	103	104	211.5	0.02	0.68	15.5	105.6	181.0	177.1	75.2	180.7	134	81	81	80		1.001	5.657	598
554	89.814	91.675		0.16	0.17	1.30	1.09	0.26	94	93	80	1.99	0.00	83	0.015	96	97	211.5	0.03	0.66	15.5	105.4	180.9	177.0	75.2	180.6	133	81	81	80		1.001	5.522	583
555	89.977	91.840		0.16	0.17	1.30	1.09	0.26	94	93	80	1.98	0.00	82	0.014	100	100	211.6	-0.06	0.65	15.5	105.3	180.8	176.8	75.2	180.5	133	81	81	80		1.001	5.410	570
556	90.139	92.006		0.16	0.17	1.30	1.09	0.26	94	93	80	1.98	0.00	82	0.015	96	97	211.6	-0.02	0.66	15.4	105.2	180.6	176.7	75.2	180.3	132	81	81	80		1.001	5.491	578
557	90.301	92.171		0.16	0.17	1.30	1.09	0.26	94	93	80	1.99	0.00	82	0.015	96	96	211.6	0.01	0.70	15.5	105.0	180.5	176.6	75.1	180.1	132	81	81	80		1.001	5.814	611
558	90.463	92.337		0.16	0.17	1.30	1.09	0.26	94	93	80	1.99	0.00	82	0.016	93	94	211.6	-0.01	0.70	15.5	104.9	180.4	176.4	75.2	180.1	132	81	81	80		1.001	5.816	611
559	90.625	92.503		0.16	0.17	1.31	1.09	0.26	94	93	80	1.98	0.00	82	0.013	103	104	211.5	0.08	0.72	15.5	104.8	180.3	176.3	75.1	180.0	131	81	81	80		1.001	5.976	627
560	90.787	92.669		0.16	0.17	1.31	1.09	0.26	94	93	80	1.98	0.00	82	0.014	99	100	211.6	-0.08	0.70	15.5	104.7	180.1	176.1	75.1	179.8	130	80	81	80		1.001	5.816	609
561	90.949	92.834		0.16	0.17	1.31	1.09	0.26	94	93	80	1.98	0.00	82	0.014	99	100	211.6	0.04	0.66	15.5	104.6	180.0	176.0	75.1	179.7	130	80	81	80		1.001	5.490	575
562	91.111	92.999		0.16	0.16	1.31	1.08	0.26	94	93	80	1.98	0.00	82	0.015	96	96	211.6	-0.05	0.70	15.5	104.4	179.9	175.9	75.1	179.5	130	81	81	80		1.001	5.813	607
563	91.273	93.164		0.16	0.17	1.30	1.07	0.26	94	93	80	1.99	0.00	91	0.014	100	101	211.1	0.47	0.70	15.4	104.3	179.7	175.8	75.1	179.4	159	81	81	80		1.001	5.814	607
564	91.435	93.329		0.16	0.16	1.31	1.09	0.26	94	93	80	2.00	0.00	86	0.015	96	97	211.2	-0.06	0.72	15.5	104.2	179.5	175.6	75.1	179.3	153	81	81	80		1.001	5.977	623
565	91.597	93.494		0.16	0.17	1.31	1.09	0.26	94	93	80	1.99	0.00	83	0.015	96	97	211.1	0.08	0.70	15.5	104.0	179.4	175.5	75.2	179.1	148	80	81	80		1.001	5.792	603
566	91.759	93.659		0.16	0.17	1.30	1.09	0.26	94	93	80	1.98	0.00	83	0.014	99	100	211.0	0.12	0.68	15.4	103.9	179.3	175.4	75.1	179.0	144	81	81	80		1.001	5.652	588
567	91.921	93.825		0.16	0.17	1.31	1.09	0.26	94	93	80	1.97	0.00	82	0.015	96	97	211.1	-0.10	0.72	15.4	103.8	179.1	175.2	75.1	178.8	141	80	81	80		1.001	5.976	621
568	92.083	93.990		0.16	0.16	1.31	1.09	0.26	94	93	80	1.98	0.00	82	0.014	99	100	211.2	-0.06	0.68	15.5	103.7	179.0	175.1	75.1	178.7	139	80	81	80		1.001	5.654	587
569	92.245	94.156		0.16	0.17	1.31	1.09	0.26	94	93	80	1.98	0.00	82	0.014	99	100	211.1	0.05	0.70	15.5	103.5	178.8	175.0	75.1	178.6	137	80	81	80		1.001	5.816	603
570	92.407	94.322		0.16	0.17	1.31	1.09	0.26	94	93	80	1.98	0.00	82	0.013	103	104	211.1	0.03	0.68	15.5	103.4	178.8	174.8	75.1	178.5	135	80	81	80		1.001	5.654	585
571	92.569	94.487		0.16	0.16	1.31	1.09	0.26	94	93	80	1.99	0.00	82	0.013	103	104	211.1	-0.01	0.62	15.5	103.2	178.6	174.8	75.1	178.3	133	80	81	80		1.001	5.171	534
572	92.731	94.653		0.16	0.17	1.31	1.09	0.26	94	93	80	1.98	0.00	82	0.014	99	100	211.1	0.02	0.66	15.5	103.1	178.5	174.6	75.1	178.2	132	80	81	80		1.001	5.493	567
573	92.893	94.818		0.16	0.16	1.31	1.09	0.26	94	93	80	2.00	0.00	82	0.014	99	100	211.2	-0.09	0.72	15.5	103.0	178.3	174.4	75.0	178.0	131	80	81	80		1.001	5.966	615
574	93.055	94.983		0.16	0.17	1.31	1.09	0.26	94	93	80	1.99	0.00	82	0.015	96	96	211.2	-0.06	0.74	15.4	102.9	178.2	174.3	75.0	177.9	130	80	81	80		1.001	6.140	632
575	93.217	95.149		0.16	0.17	1.32	1.09	0.26	94	93	80	1.98	0.00	82	0.014	99	100	211.1	0.17	0.72	15.4	102.7	178.0	174.2	75.0	177.8	130	80	80	80		1.001	5.976	615
576	93.379	95.315		0.16	0.17	1.31	1.09	0.26	94	93	80	1.98	0.00	82	0.014	99	100	211.0	0.02	0.74	15.4	102.5	177.9	174.0	75.0	177.6	129	80	80	80		1.001	6.142	631
577	93.541	95.480		0.16	0.17	1.31	1.09	0.26	94	93	80	1.99	0.00	82	0.013	103	104	211.2	-0.12	0.74	15.5	102.5	177.8	173.9	75.0	177.5	128	80	80	80		1.001	6.141	630
578	93.704	95.646		0.16	0.17	1.31	1.09	0.26	94	93	80	2.00	0.00	82	0.015	97	97	211.1	0.09	0.70	15.5	102.3	177.6	173.8	75.0	177.3	128	80	80	80		1.001	5.814	596
579	93.866	95.812		0.16	0.17	1.31	1.09	0.26	94	93	80	1.99	0.00	82	0.015	96	97	211.1	-0.07	0.76	15.6	102.2	177.5	173.6	75.0	177.2	127	80	80	80		1.001	6.303	645
580	94.028	95.978		0.16	0.17	1.31	1.09	0.26	94	93	80	1.99	0.00	82	0.015	96	97	211.2	-0.01	0.64	15.5	102.0	177.3	173.5	75.0	177.0	126	80	80	80		1.001	5.329	544
581	94.190	96.143		0.16	0.17	1.31	1.09	0.26	94	93	80	1.99	0.00	82	0.016	93	93	211.0	0.11	0.70	15.5	102.0	177.2	173.4	75.0	176.9	126	80	80	80		1.001	5.834	596
582	94.352	96.308		0.16	0.17	1.32	1.09	0.26	94	93	80	1.98	0.00	82	0.014	99	100	211.1	-0.09	0.72	15.5	101.8	177.0	173.2	75.0	176.8	126	80	80	80		1.001	6.003	612
583	94.515	96.474		0.16	0.17	1.31	1.09	0.26	94	93	80	1.97	0.00	82	0.014	100	100	211.1	0.00	0.71	15.5	101.6	176.9	173.0	74.9	176.6	126	80	80	80		1.001	5.927	603
584	94.677	96.639		0.16	0.16	1.32	1.09	0.26	94	93	80	1.98	0.00	82	0.014	99	100	211.1	0.02	0.70	15.5	101.5	176.7	172.9	75.0	176.4	125	80	80	80		1.001	5.802	590
585	94.839	96.805		0.16	0.17	1.31	1.09	0.26	94	93	80	1.98	0.00	82	0.015	96	97	211.1	0.00	0.66	15.6	101.4	176.6	172.7	74.9	176.3	124	80	80	80		1.001	5.495	558
586	95.002	96.970		0.16	0.16	1.31	1.09	0.26	94	93	80	1.98	0.00	82	0.015	97	96	211.2	-0.05	0.74	15.5	101.3	176.4	172.7	74.9	176.2	124	80	80	80		1.001	6.141	623
587	95.164	97.136		0.16	0.17	1.31	1.09	0.26	94	93	80	1.98	0.00	82	0.013	103	104	211.1	0.06	0.70	15.4	101.2	176.3	172.4	74.8	176.0	124	80	80	80		1.001	5.820	590
588	95.326	97.302		0.16	0.17	1.31	1.09	0.26	94	93	80	1.99	0.00	82	0.015	96	97	211.1	0.02	0.72	15.5	101.0	176.2	172.3	74.9	175.9	123	80	80	80		1.001	5.982	605
589	95.488	97.467		0.16	0.16	1.31	1.09	0.26	94	93	80	1.98	0.00	82	0.014	99	100	211.2	-0.09	0.72	15.5	101.0	176.0	172.1	74.8	175.8	123	80	80	80		1.001	5.980	605
590	95.651	97.634		0.16	0.17	1.31	1.09	0.26	94	93	80	1.97	0.00	82	0.014	100	101	211.2	-0.02	0.70	15.5	100.8	175.9	172.0	74.8	175.6	122	80	80	80		1.001	5.817	587
591	95.813	97.799		0.16	0.17	1.30	1.09	0.26	94	93	80	1.98	0.00	82	0.015	96	96	211.2	-0.01	0.70	15.5	100.7	175.7	171.7	74.7	175.4	122	80	80	80		1.001	5.819	586
592	95.975	97.965		0.16	0.17	1.31	1.09	0.26	94	93	80	1.99	0.00	81	0.014	99	100	211.2	0.04	0.70	15.5	100.5	175.5	171.6	74.7	175.3	122	80	80	80		1.001	5.815	585
593	96.137	98.130		0.16	0.16	1.31	1.08	0.26	94	93	80	1.99	0.00	82	0.013	103	104	211.2	-0.04	0.71	15.5	100.3	175.4	171.5	74.8	175.1	122	80	80	80		1.001	5.873	590
594	96.300	98.295		0.16	0.17	1.30	1.08	0.26	94	93	80	2.01	0.00	91	0.014	101	101	211.0	0.21	0.76	15.5	100.2	175.2	171.3	74.7	175.0	149	81	81	80		1.001	6.302	632
595	96.462	98.461		0.16	0.17	1.31	1.09	0.26	94	93	80	1.99	0.00	85	0.013	103	105	211.0	-0.01	0.72	15.5	100.1	175.1	171.2	74.7	174.8	143	80	80	80		1.001	5.980	599
596	96.624	98.626		0.16	0.17	1.31	1.09	0.26	94	93	80	1.98	0.00	82	0.014	99	100	210.9	0.11	0.68	15.5	99.9	174.9	171.0	74.7	174.6	139	80	80	80		1.001	5.655	566
597	96.786	98.792		0.16	0.17	1.31	1.10	0.26	94	93	79	1.98	0.00	82	0.014	99	100	210.9	-0.04	0.72	15.4	99.8	174.8	170.9	74.7	174.5	135	80	80	79		1.001	5.980	598
598	96.948	98.957		0.16	0.16	1.31	1.09	0.26	94	93	80	2.00	0.00	82	0.015	96	96	210.8	0.11	0.72	15.4	99.8	174.7	170.8	74.6	174.4	133	80	80	80		1.001	5.982	598
599	97.111	99.123		0.16	0.17	1.31	1.09	0.26	94	93	80	1.98	0.00	82	0.015	97	97	210.9	-0.06	0.68	15.4	99.6	174.5	170.7	74.7	174.2	131	80	80	80		1.001	5.656	564
600	97.273	99.289		0.16	0.17	1.31	1.09	0.26	94	93	80	1.99	0.00	82	0.015	96	97	210.8	0.12	0.66	15.4	99.5	174.4	170.6	74.6	174.1	129	80	80	80		1.001	5.526	550
601	97.435	99.455		0.16	0.17	1.31	1.09	0.26	93	93	79	1.98	0.00	81	0.014	99	100	210.8	-0.02	0.73	15.5	99.4	174.2	170.4	74.6	173.9	128	80	80	79		1.001	6.089	606
602	97.598	99.620		0.16	0.17	1.31	1.09	0.26	93	93	80	1.99	0.00	81	0.013	104	104	210.8	0.01	0.72	15.5	99.2	174.1	170.2	74.6	173.8	127	80	80	80		1.001	5.981	594
603	97.760	99.786		0.16	0.17	1.31	1.09	0.26	93	93	79	1.99	0.00	82	0.015	96	97	210.8	-0.07	0.72	15.5	99.1	174.0	170.1	74.6	173.7	127	80	80	79		1.001	5.981	593
604	97.922	99.951		0.16	0.16	1.31	1.09	0.26	93	93	79	1.97	0.00	81	0.014	99	100	210.9	-0.03	0.72	15.5	99.0	173.8	170.0	74.6	173.5	125	80	80	79		1.001	5.978	592
605	98.084	100.117		0.16	0.17	1.31	1.09	0.26	93	93	79	1.99	0.00	81	0.014	99	100	210.8	0.10	0.68	15.5	98.8	173.7	169.8	74.5	173.4	125	80	80	79		1.001	5.657	560
606	98.246	100.282		0.16	0.16	1.31	1.09	0.26	93	93	79	2.00	0.00	81	0.014	99	100	210.8	-0.03	0.70	15.5	98.6	173.5	169.7	74.6	173.2	124	80	80	79		1.001	5.818	575
607	98.408	100.448		0.16	0.17	1.31	1.09	0.26	93	93	79	1.99	0.00	81	0.012	107	108	210.9	-0.08	0.68	15.5	98.5	173.3	169.6	74.6	173.1	123	80	80	79		1.001	5.657	558
608	98.570	100.614		0.16	0.17	1.31	1.09	0.26	93	93	79	1.99	0.00	81	0.014	99	100	210.8	0.07	0.72	15.5	98.4	173.2	169.5	74.5	173.0	123	80	80	79		1.001	5.980	589
609	98.732	100.779		0.16	0.16	1.32	1.09	0.26	93	93	79	1.99	0.00	81	0.014	99	100	210.7	0.11	0.72	15.4	98.2	173.1	169.3	74.6	172.8	122	80	80	79		1.001	5.977	588
610	98.894	100.945		0.16	0.17	1.31	1.09	0.26	93	93	79	1.99	0.00	81	0.014	99	100	210.9	-0.23	0.70	15.5	98.1	172.9	169.2	74.6	172.7	122	80	80	79		1.001	5.816	571

Elapsed Time	Particulate Sampling Data																	Fuel Weight, lb		Flow, gpm		Temperature Data, oF													
	Gas Meter Cubic Feet (1)	Gas Meter Cubic Feet (2)	Gas Meter Cubic Feet (amb)	Sample Rate, cfm (1)	Sample Rate, cfm (2)	Orifice dH (1)	Orifice dH (2)	Orifice dH (amb)	Meter oF (1)	Meter oF (2)	Meter oF (amb)	Meter Vac. In. Hg. (1)	Meter Vac. In. Hg. (2)	Dilution Tunnel Temp.	Dilution Tunnel dP	Pro. Rate (%) (1)	Pro. Rate (%) (2)	Scale Reading	Weight Change	Load Side Liquid Flow Rate	Boiler Side Liquid Flow Rate (optional)	Thermopile ΔT	Boiler to Heat Exch. Temp.	Heat Exch to Boiler Temp.	Inlet Load Temp.	Outlet Load Temp.	Stack	Filter (1)	Filter (2)	Ambient		Specific Heat of Inlet Water (BTU/lb-°F)	Mass Flow Rate of Inlet Water (lb/min)	Heat Output, Btu
611	99.056	101.111		0.16	0.17	1.32	1.09	0.26	93	93	79	1.98	0.00	81	0.015	96	97	210.9	0.07	0.70	15.4	97.8	172.7	169.0	74.6	172.5	121	80	80	79		1.001	5.820	570
612	99.219	101.277		0.16	0.17	1.31	1.09	0.26	93	92	79	1.98	0.00	81	0.015	97	97	210.8	0.04	0.74	15.4	97.7	172.6	168.9	74.6	172.3	121	80	80	79		1.001	6.145	601
613	99.381	101.443		0.16	0.17	1.31	1.10	0.26	93	92	79	1.97	0.00	82	0.014	99	101	210.9	-0.08	0.68	15.6	97.6	172.4	168.7	74.6	172.2	121	80	80	79		1.001	5.663	553
614	99.543	101.608		0.16	0.17	1.31	1.09	0.26	93	92	79	1.98	0.00	82	0.014	99	100	210.8	0.11	0.68	15.5	97.4	172.3	168.6	74.6	172.0	120	80	80	79		1.001	5.663	552
615	99.705	101.774		0.16	0.17	1.32	1.09	0.26	93	92	79	1.98	0.00	82	0.013	103	104	210.7	0.05	0.66	15.4	97.3	172.1	168.5	74.6	171.9	120	80	80	79		1.001	5.507	536
616	99.868	101.939		0.16	0.16	1.31	1.10	0.26	93	92	79	1.99	0.00	82	0.016	94	94	210.9	-0.20	0.70	15.5	97.1	171.9	168.3	74.6	171.7	120	80	80	79		1.001	5.832	567
617	100.030	102.105		0.16	0.17	1.32	1.09	0.26	93	92	79	1.99	0.00	82	0.014	99	101	210.8	0.14	0.66	15.5	97.0	171.8	168.2	74.5	171.5	119	80	80	79		1.001	5.510	535
618	100.192	102.271		0.16	0.17	1.32	1.10	0.26	93	92	78	1.97	0.00	81	0.014	99	101	210.8	-0.02	0.74	15.5	96.8	171.7	168.0	74.5	171.4	119	80	80	78		1.001	6.147	596
619	100.355	102.437		0.16	0.17	1.32	1.10	0.26	93	92	78	1.99	0.00	81	0.015	97	97	210.9	-0.07	0.69	15.5	96.7	171.5	167.9	74.5	171.3	119	80	80	78		1.001	5.701	552
620	100.517	102.603		0.16	0.17	1.32	1.10	0.26	93	92	78	1.98	0.00	81	0.014	99	101	210.9	0.00	0.66	15.5	96.6	171.4	167.7	74.5	171.1	118	80	80	78		1.001	5.510	533
621	100.680	102.768		0.16	0.17	1.31	1.10	0.26	93	92	78	1.99	0.00	81	0.013	104	104	210.9	-0.05	0.70	15.4	96.4	171.2	167.6	74.5	170.9	118	79	80	78		1.001	5.809	561
622	100.842	102.935		0.16	0.17	1.31	1.10	0.26	93	92	78	1.99	0.00	81	0.015	96	98	210.9	0.08	0.70	15.5	96.3	171.1	167.4	74.5	170.8	118	79	80	78		1.001	5.835	562
623	101.004	103.101		0.16	0.17	1.31	1.09	0.26	93	92	78	1.98	0.00	80	0.013	103	104	211.0	-0.12	0.72	15.5	96.1	170.9	167.2	74.5	170.6	118	79	79	78		1.001	5.998	577
624	101.167	103.267		0.16	0.17	1.31	1.10	0.26	93	92	78	1.99	0.00	80	0.013	104	104	210.8	0.19	0.74	15.5	96.0	170.8	167.1	74.5	170.5	117	79	79	78		1.001	6.164	592
625	101.329	103.432		0.16	0.17	1.31	1.08	0.26	93	92	78	1.98	0.00	88	0.015	97	97	210.7	0.08	0.72	15.5	95.8	170.6	167.0	74.5	170.3	142	80	80	78		1.001	5.998	576
626	101.491	103.598		0.16	0.17	1.31	1.09	0.26	93	92	78	1.99	0.00	82	0.013	103	104	210.7	0.05	0.76	15.5	95.6	170.4	166.8	74.5	170.1	137	79	79	78		1.001	6.319	605
627	101.654	103.763		0.16	0.17	1.31	1.09	0.26	93	92	78	1.99	0.00	80	0.014	100	100	210.8	-0.13	0.72	15.5	95.5	170.3	166.7	74.5	170.0	133	79	79	78		1.001	5.999	574
628	101.816	103.929		0.16	0.17	1.31	1.10	0.26	93	92	77	1.98	0.00	80	0.015	96	97	210.6	0.14	0.70	15.5	95.4	170.1	166.5	74.5	169.9	130	79	79	77		1.001	5.836	557
629	101.979	104.095		0.16	0.17	1.31	1.09	0.26	93	92	77	1.97	0.00	79	0.015	96	97	210.7	-0.06	0.66	15.5	95.3	170.0	166.4	74.5	169.8	128	79	79	77		1.001	5.511	526
630	102.141	104.261		0.16	0.17	1.31	1.10	0.26	93	92	77	1.99	0.00	79	0.014	99	100	210.7	-0.01	0.68	15.4	95.1	169.8	166.3	74.5	169.6	126	79	79	77		1.001	5.676	540
631	102.303	104.427		0.16	0.17	1.31	1.10	0.26	93	92	77	1.98	0.00	79	0.014	99	100	210.7	0.00	0.76	15.4	94.9	169.7	166.1	74.5	169.4	125	79	79	77		1.001	6.326	601
632	102.466	104.593		0.16	0.17	1.32	1.10	0.26	93	92	78	1.98	0.00	79	0.013	104	104	210.6	0.08	0.74	15.5	94.8	169.5	166.0	74.5	169.3	123	79	79	78		1.001	6.163	585
633	102.628	104.759		0.16	0.17	1.32	1.10	0.26	93	92	78	1.99	0.00	79	0.015	96	97	210.6	0.06	0.76	15.4	94.6	169.4	165.9	74.5	169.1	122	79	79	78		1.001	6.324	599
634	102.791	104.925		0.16	0.17	1.32	1.10	0.26	93	92	78	1.99	0.00	79	0.014	100	100	210.6	-0.08	0.70	15.5	94.5	169.2	165.6	74.5	168.9	122	79	79	78		1.001	5.838	552
635	102.953	105.092		0.16	0.17	1.31	1.09	0.26	93	92	77	1.98	0.00	79	0.013	103	105	210.7	-0.02	0.76	15.4	94.4	169.0	165.5	74.5	168.8	121	79	79	77		1.001	6.320	597
636	103.115	105.258		0.16	0.17	1.31	1.10	0.26	92	91	77	1.99	0.00	79	0.012	107	109	210.6	0.01	0.76	15.5	94.3	169.0	165.3	74.4	168.7	120	79	79	77		1.001	6.338	598
637	103.278	105.423		0.16	0.17	1.31	1.10	0.26	92	91	77	1.99	0.00	79	0.013	104	104	210.7	-0.01	0.72	15.4	94.2	168.9	165.3	74.4	168.6	120	78	79	77		1.001	6.022	568
638	103.440	105.589		0.16	0.17	1.32	1.10	0.26	92	91	77	1.98	0.00	78	0.012	107	108	210.6	0.11	0.74	15.5	94.1	168.7	165.1	74.4	168.5	119	78	79	77		1.001	6.128	577
639	103.602	105.755		0.16	0.17	1.32	1.09	0.26	92	91	77	1.97	0.00	78	0.014	99	100	210.7	-0.17	0.68	15.5	93.9	168.5	164.9	74.4	168.3	118	78	79	77		1.001	5.677	533
640	103.764	105.921		0.16	0.17	1.32	1.10	0.26	92	91	77	1.99	0.00	78	0.012	107	108	210.7	-0.01	0.72	15.5	93.8	168.4	164.8	74.4	168.1	118	78	79	77		1.001	6.001	563
641	103.926	106.087		0.16	0.17	1.32	1.10	0.26	92	91	77	1.97	0.00	78	0.013	103	104	210.7	0.05	0.74	15.5	93.7	168.3	164.6	74.4	168.0	117	78	78	77		1.001	6.166	578
642	104.089	106.253		0.16	0.17	1.32	1.10	0.26	92	91	77	1.97	0.00	78	0.015	97	97	210.7	0.02	0.72	15.4	93.6	168.1	164.5	74.3	167.9	117	78	78	77		1.001	6.001	562
643	104.251	106.419		0.16	0.17	1.32	1.10	0.26	92	91	77	1.97	0.00	78	0.015	96	97	210.6	0.03	0.70	15.5	93.4	168.0	164.3	74.3	167.7	116	78	78	77		1.001	5.840	546
644	104.414	106.585		0.16	0.17	1.32	1.10	0.26	92	91	77	1.97	0.00	78	0.013	104	104	210.8	-0.20	0.70	15.6	93.3	167.8	164.2	74.2	167.5	116	78	78	77		1.001	5.840	545
645	104.576	106.751		0.16	0.17	1.32	1.10	0.26	92	91	77	1.97	0.00	78	0.015	96	97	210.7	0.12	0.68	15.4	93.2	167.6	164.0	74.2	167.4	117	78	78	77		1.001	5.673	529
646	104.738	106.917		0.16	0.17	1.32	1.10	0.26	92	91	77	1.99	0.00	78	0.012	107	108	210.7	0.04	0.72	15.5	93.1	167.5	163.9	74.2	167.3	117	78	78	77		1.001	5.997	559
647	104.900	107.083		0.16	0.17	1.32	1.10	0.26	92	91	77	1.97	0.00	78	0.013	103	104	210.7	-0.01	0.71	15.4	93.0	167.3	163.7	74.1	167.1	116	78	78	77		1.001	5.864	546
648	105.063	107.250		0.16	0.17	1.32	1.10	0.26	92	91	76	1.97	0.00	78	0.014	100	101	210.6	0.04	0.70	15.4	92.8	167.2	163.6	74.1	166.9	115	78	78	76		1.001	5.840	543
649	105.226	107.416		0.16	0.17	1.32	1.10	0.26	92	91	76	1.99	0.00	78	0.015	97	97	210.7	-0.06	0.70	15.5	92.8	167.0	163.5	74.1	166.8	115	78	78	76		1.001	5.838	542
650	105.388	107.582		0.16	0.17	1.32	1.10	0.26	92	91	76	1.97	0.00	78	0.014	99	100	210.8	-0.09	0.72	15.5	92.6	166.9	163.3	74.1	166.7	115	78	78	76		1.001	6.005	557
651	105.550	107.747		0.16	0.17	1.32	1.09	0.26	92	91	76	1.98	0.00	78	0.014	99	100	210.7	0.05	0.72	15.4	92.4	166.8	163.1	74.1	166.5	115	78	78	76		1.001	6.005	556
652	105.713	107.913		0.16	0.17	1.32	1.09	0.26	92	91	76	1.99	0.00	78	0.013	104	104	210.8	-0.01	0.72	15.4	92.3	166.6	163.0	74.0	166.4	115	78	78	76		1.001	6.005	555
653	105.875	108.079		0.16	0.17	1.31	1.10	0.26	92	91	76	1.98	0.00	78	0.015	96	97	210.8	0.00	0.72	15.5	92.2	166.4	162.9	74.1	166.2	114	78	78	76		1.001	5.998	553
654	106.038	108.245		0.16	0.17	1.32	1.10	0.26	92	91	76	1.98	0.00	78	0.014	100	100	210.7	0.02	0.70	15.5	92.0	166.2	162.7	74.0	166.0	114	78	78	76		1.001	5.838	538
655	106.200	108.411		0.16	0.17	1.32	1.10	0.26	92	91	76	1.97	0.00	78	0.014	99	100	210.8	-0.04	0.70	15.4	91.9	166.1	162.6	74.0	165.9	117	78	78	76		1.001	5.851	538
656	106.363	108.576		0.16	0.16	1.31	1.09	0.26	92	91	76	2.00	0.00	85	0.015	97	97	210.7	0.06	0.71	15.5	91.7	165.9	162.4	74.1	165.8	138	78	78	76		1.001	5.889	541
657	106.525	108.742		0.16	0.17	1.31	1.10	0.26	92	90	76	1.98	0.00	79	0.014	99	101	210.6	0.11	0.69	15.5	91.5	165.8	162.3	74.0	165.6	132	78	78	76		1.001	5.696	522
658	106.687	108.908		0.16	0.17	1.31	1.10	0.26	92	90	76	1.97	0.00	78	0.014	99	101	210.4	0.17	0.72	15.5	91.4	165.6	162.2	74.0	165.4	128	77	78	76		1.001	6.003	549
659	106.850	109.074		0.16	0.17	1.32	1.10	0.26	91	90	76	1.97	0.00	78	0.014	100	101	210.5	-0.10	0.74	15.5	91.3	165.5	162.0	74.0	165.3	125	77	78	76		1.001	6.165	563
660	107.012	109.241		0.16	0.17	1.31	1.10	0.26	91	90	76	1.99	0.00	78	0.014	99	101	210.6	-0.02	0.64	15.5	91.1	165.4	161.9	74.0	165.2	122	77	78	76		1.001	5.356	488
661	107.174	109.407		0.16	0.17	1.32	1.09	0.26	91	90	76	1.98	0.00	78	0.014	99	101	210.6	-0.02	0.70	15.5	90.9	165.2	161.7	74.0	165.0	121	77	77	76		1.001	5.839	532
662	107.337	109.572		0.16	0.17	1.32	1.10	0.26	91	90	76	1.98	0.00	78	0.014	100	100	210.5	0.03	0.72	15.5	90.8	165.1	161.7	74.0	164.9	120	77	77	76		1.001	6.004	546
663	107.499	109.738		0.16	0.17	1.32	1.10	0.26	91	90	76	1.97	0.00	77	0.013	103	104	210.6	-0.02	0.74	15.5	90.6	164.9	161.5	74.1	164.7	119	77	77	76		1.001	6.166	560
664	107.662	109.904		0.16	0.17	1.31	1.10	0.26	91	90	76	1.99	0.00	77	0.015	97	97	210.6	-0.04	0.68	15.5	90.5	164.8	161.3	74.0	164.5	118	77	77	76		1.001	5.681	515
665	107.824	110.070		0.16	0.17	1.32	1.10	0.26	91	90	76	1.97	0.00	77	0.015	96	97	210.6	-0.01	0.74	15.5	90.3	164.6	161.2	74.1	164.4	117	77	77	76		1.001	6.187	559
666	107.986	110.236		0.16	0.17	1.33	1.10	0.26	91	90	76	1.99	0.00	77	0.015	96	97	210.6	0.00	0.70	15.5	90.2	164.5	161.1	74.1	164.3	117	77	77	76		1.001	5.831	526
667	108.148	110.402		0.16	0.17	1.32	1.10	0.26	91	90	76	1.99	0.00	77	0.012	107	109	210.5	0.13	0.70	15.5	90.1	164.4	161.0	74.1	164.2	116	77	77	76		1.001	5.841	527
668	108.310	110.567		0.16	0.16	1.32	1.10	0.26	91	90	76	1.97	0.00	77	0.015	96	97	210.5	-0.04	0.74	15.6	89.9	164.2	160.9	74.1	164.0	115	77	77	76		1.001	6.167	555
669	108.472	110.734		0.16	0.17	1.32	1.10	0.26	91	90	76	1.99	0.00	77	0.015	96	98	210.6	-0.11	0.66	15.5	89.7	164.1	161.0	74.1	163.8	115	77	77	76		1.001	5.519	496
670	108.634	110.899		0.16	0.17	1.32	1.10	0.26	91	90	76	1.98	0.00	77	0.014	99	100	210.5	0.18	0.62	15.5	89.6	163.9	160.7	74.1	163.7	115	77	77	76		1.001	5.192	465
671	108.797	111.065		0.16	0.17	1.32	1.10	0.26	91	90	76	1.97	0.00	77	0.014	100	101	210.6	-0.10	0.70	15.5	89.4	163.8	160.4	74.2	163.5	115	77	77	76		1.001	5.842	523
672	108.959	111.232		0.16	0.17	1.32	1.10	0.26	91	90	76	1.97	0.00	77	0.014	99	101	210.5	0.08	0.72	15.4	89.2	163.7	160.3	74.2	163.4	114	77	77	76		1.001	6.003	536

Elapsed Time	Particulate Sampling Data																	Fuel Weight, lb		Flow, gpm		Temperature Data, oF												
	Gas Meter Cubic Feet (1)	Gas Meter Cubic Feet (2)	Gas Meter Cubic Feet (amb)	Sample Rate, cfm (1)	Sample Rate, cfm (2)	Orifice dH (1)	Orifice dH (2)	Orifice dH (amb)	Meter oF (1)	Meter oF (2)	Meter oF (amb)	Meter Vac. In. Hg. (1)	Meter Vac. In. Hg. (2)	Dilution Tunnel Temp.	Dilution Tunnel dP	Pro. Rate (%) (1)	Pro. Rate (%) (2)	Scale Reading	Weight Change	Load Side Liquid Flow Rate	Boiler Side Liquid Flow Rate (optional)	Thermopile ΔT	Boiler to Heat Exch. Temp.	Heat Exch to Boiler Temp.	Inlet Load Temp.	Outlet Load Temp.	Stack	Filter (1)	Filter (2)	Ambient		Specific Heat of Inlet Water (BTU/lb-°F)	Mass Flow Rate of Inlet Water (lb/min)	Heat Output, Btu
673	109.122	111.398		0.16	0.17	1.32	1.10	0.26	91	90	76	1.99	0.00	77	0.016	94	94	210.6	-0.12	0.74	15.5	89.1	163.6	160.2	74.2	163.3	114	77	77	76		1.001	6.167	550
674	109.284	111.564		0.16	0.17	1.32	1.10	0.26	91	90	76	1.98	0.00	77	0.013	103	104	210.6	-0.01	0.69	15.5	89.0	163.4	160.0	74.2	163.2	114	77	77	76		1.001	5.708	508
675	109.446	111.730		0.16	0.17	1.32	1.10	0.26	91	90	76	1.97	0.00	77	0.015	96	97	210.7	-0.07	0.74	15.6	88.8	163.2	159.9	74.2	163.0	113	77	77	76		1.001	6.166	548
676	109.608	111.896		0.16	0.17	1.32	1.09	0.26	91	90	76	1.98	0.00	77	0.015	96	97	210.5	0.16	0.70	15.4	88.6	163.1	159.7	74.2	162.9	113	77	77	76		1.001	5.841	518
677	109.771	112.062		0.16	0.17	1.32	1.09	0.26	91	90	76	1.99	0.00	77	0.013	104	104	210.7	-0.13	0.70	15.6	88.5	162.9	159.6	74.2	162.7	113	77	77	76		1.001	5.841	518
678	109.933	112.227		0.16	0.17	1.32	1.10	0.26	91	90	76	1.97	0.00	77	0.014	99	100	210.7	-0.01	0.66	15.5	88.4	162.8	159.4	74.2	162.6	112	77	77	76		1.001	5.521	488
679	110.096	112.393		0.16	0.17	1.32	1.10	0.26	91	89	75	1.99	0.00	77	0.014	100	101	210.7	0.00	0.68	15.5	88.2	162.6	159.3	74.2	162.4	113	77	77	75		1.001	5.683	502
680	110.258	112.559		0.16	0.17	1.32	1.09	0.26	91	89	76	1.99	0.00	84	0.016	94	95	210.5	0.20	0.72	15.4	88.1	162.5	159.2	74.2	162.3	140	77	77	76		1.001	6.006	530
681	110.420	112.724		0.16	0.17	1.32	1.10	0.26	91	89	76	1.98	0.00	86	0.013	104	105	210.4	0.11	0.75	15.5	88.0	162.4	158.9	74.1	162.1	151	77	77	76		1.001	6.203	546
682	110.582	112.890		0.16	0.17	1.31	1.10	0.26	91	89	76	1.98	0.00	87	0.015	97	98	210.1	0.25	0.70	15.5	87.8	162.2	158.8	74.1	162.0	158	77	77	76		1.001	5.843	514
683	110.744	113.055		0.16	0.17	1.32	1.10	0.26	91	89	76	1.99	0.00	88	0.016	94	95	209.6	0.54	0.70	15.5	87.8	162.1	158.7	74.1	161.9	168	77	77	76		1.001	5.814	511
684	110.906	113.221		0.16	0.17	1.31	1.10	0.26	90	89	75	2.00	0.00	90	0.015	97	98	209.0	0.55	0.76	15.5	87.8	162.1	158.7	74.0	161.8	178	78	78	75		1.001	6.331	556
685	111.068	113.387		0.16	0.17	1.32	1.10	0.26	90	89	76	1.98	0.00	91	0.014	101	102	208.7	0.33	0.72	15.4	87.9	162.1	158.7	74.0	161.8	188	78	78	76		1.001	6.007	528
686	111.230	113.553		0.16	0.17	1.32	1.10	0.26	90	89	75	1.99	0.00	93	0.015	98	99	207.9	0.76	0.68	15.5	88.1	162.3	158.9	73.9	162.0	200	78	78	75		1.001	5.683	501
687	111.392	113.718		0.16	0.17	1.32	1.10	0.26	90	89	76	2.00	0.00	96	0.014	101	102	207.4	0.51	0.70	15.5	88.4	162.6	159.2	73.8	162.3	211	78	78	76		1.001	5.844	517
688	111.553	113.883		0.16	0.16	1.32	1.10	0.26	90	89	76	2.00	0.00	99	0.015	98	99	207.0	0.43	0.72	15.5	89.0	163.2	159.7	73.8	162.8	218	78	79	76		1.001	6.009	535
689	111.715	114.048		0.16	0.17	1.32	1.10	0.26	90	89	75	1.99	0.00	100	0.015	98	99	206.4	0.62	0.70	15.5	89.6	163.8	160.3	73.8	163.3	225	79	79	75		1.001	5.847	524
690	111.877	114.213		0.16	0.16	1.32	1.10	0.26	90	89	76	2.00	0.00	102	0.015	98	99	205.8	0.52	0.70	15.5	90.5	164.6	161.1	73.7	164.2	230	79	79	76		1.001	5.853	530
691	112.038	114.378		0.16	0.17	1.33	1.10	0.26	90	89	76	2.00	0.00	104	0.015	98	99	205.0	0.80	0.68	15.5	91.1	165.3	161.7	73.7	164.8	235	79	79	76		1.001	5.683	518
692	112.200	114.543		0.16	0.17	1.32	1.10	0.26	90	89	76	2.01	0.00	105	0.015	99	99	204.6	0.43	0.66	15.4	92.0	166.2	162.6	73.7	165.7	238	80	80	76		1.001	5.520	508
693	112.361	114.708		0.16	0.16	1.32	1.10	0.26	90	89	75	2.01	0.00	107	0.015	98	99	203.9	0.66	0.70	15.5	92.9	167.0	163.4	73.7	166.6	241	80	80	75		1.001	5.839	543
694	112.522	114.873		0.16	0.17	1.32	1.10	0.26	90	89	75	2.00	0.00	107	0.016	95	96	203.3	0.67	0.66	15.4	93.7	168.0	164.5	73.7	167.4	244	80	80	75		1.001	5.520	518
695	112.684	115.038		0.16	0.16	1.32	1.09	0.26	90	89	75	2.01	0.00	108	0.016	96	96	202.5	0.77	0.72	15.4	94.6	168.8	165.1	73.7	168.2	247	80	81	75		1.001	6.008	569
696	112.845	115.201		0.16	0.16	1.32	1.09	0.26	90	89	75	2.02	0.00	109	0.014	102	102	201.8	0.67	0.72	15.5	95.5	169.7	166.0	73.7	169.2	250	81	81	75		1.001	6.007	574
697	113.006	115.366		0.16	0.17	1.32	1.09	0.26	90	89	76	2.01	0.00	110	0.015	98	100	201.3	0.52	0.70	15.5	96.3	170.6	166.9	73.7	170.0	254	81	81	76		1.001	5.843	564
698	113.167	115.530		0.16	0.16	1.32	1.09	0.26	90	89	76	2.02	0.00	111	0.016	95	96	200.4	0.95	0.76	15.5	97.3	171.6	167.7	73.7	171.0	256	82	82	76		1.001	6.333	617
699	113.328	115.694		0.16	0.16	1.32	1.09	0.26	90	89	76	2.01	0.00	112	0.016	96	96	199.7	0.63	0.70	15.5	98.1	172.4	168.5	73.7	171.8	259	82	82	76		1.001	5.848	574
700	113.489	115.859		0.16	0.16	1.32	1.09	0.26	90	89	76	2.02	0.00	112	0.016	96	97	198.9	0.83	0.70	15.5	99.2	173.4	169.5	73.7	172.9	262	82	83	76		1.001	5.840	580
701	113.650	116.023		0.16	0.16	1.31	1.09	0.26	90	89	76	2.04	0.00	113	0.015	99	99	198.1	0.77	0.70	15.4	100.1	174.4	170.4	73.8	173.8	265	83	83	76		1.001	5.846	586
702	113.811	116.186		0.16	0.16	1.31	1.08	0.26	90	89	76	2.04	0.00	114	0.014	102	102	197.2	0.93	0.74	15.6	101.0	175.3	171.3	73.8	174.7	267	83	83	76		1.001	6.166	623
703	113.971	116.349		0.16	0.16	1.32	1.08	0.26	90	89	76	2.02	0.00	114	0.016	95	96	196.6	0.56	0.72	15.4	102.0	176.4	172.3	73.8	175.8	269	84	84	76		1.001	6.004	613
704	114.132	116.513		0.16	0.16	1.31	1.08	0.26	90	89	76	2.03	0.00	115	0.015	99	99	195.8	0.83	0.72	15.5	103.1	177.5	173.5	73.8	176.9	270	84	84	76		1.001	6.004	620
705	114.292	116.676		0.16	0.16	1.31	1.08	0.26	90	89	76	2.03	0.00	115	0.014	102	102	195.2	0.57	0.70	15.5	104.0	178.4	174.3	73.8	177.9	272	84	85	76		1.001	5.841	608
706	114.453	116.840		0.16	0.16	1.31	1.07	0.26	90	89	76	2.04	0.00	116	0.015	99	100	194.2	1.01	0.70	15.5	105.0	179.6	175.4	73.9	178.9	275	85	85	76		1.001	5.843	615
707	114.613	117.002		0.16	0.16	1.31	1.07	0.26	90	89	76	2.05	0.00	117	0.015	98	98	193.4	0.86	0.72	15.5	106.0	180.7	176.5	73.9	180.0	276	85	85	76		1.001	6.005	638
708	114.773	117.165		0.16	0.16	1.31	1.07	0.26	90	89	76	2.06	0.00	117	0.016	95	96	192.5	0.85	0.72	15.4	107.2	181.8	177.5	73.9	181.1	278	86	86	76		1.001	5.993	643
709	114.933	117.327		0.16	0.16	1.31	1.07	0.26	90	89	76	2.06	0.00	118	0.015	99	99	191.8	0.70	0.69	15.5	108.3	182.8	178.6	74.0	182.2	280	86	86	76		1.001	5.710	619
710	115.094	117.490		0.16	0.16	1.30	1.07	0.26	90	89	76	2.04	0.00	112	0.014	102	102	191.0	0.80	0.67	15.5	109.3	183.9	179.6	74.0	183.2	266	85	84	76		1.001	5.581	611
711	115.255	117.653		0.16	0.16	1.30	1.06	0.26	90	89	76	2.03	0.00	97	0.016	94	94	190.6	0.39	0.72	15.4	110.2	184.7	180.4	74.0	184.2	246	83	83	76		1.001	6.007	663
712	115.415	117.815		0.16	0.16	1.30	1.06	0.26	90	89	76	2.05	0.00	91	0.014	100	100	190.3	0.36	0.72	15.5	110.8	185.2	180.9	74.0	184.8	233	83	83	76		1.001	6.007	666
713	115.576	117.977		0.16	0.16	1.30	1.06	0.26	90	89	75	2.03	0.00	88	0.014	100	99	190.0	0.23	0.70	15.5	111.0	185.4	181.2	74.0	185.0	225	83	82	75		1.001	5.847	650
714	115.736	118.140		0.16	0.16	1.30	1.06	0.26	90	89	76	2.03	0.00	87	0.014	99	100	189.8	0.24	0.70	15.5	111.2	185.6	181.5	74.0	185.2	218	82	82	76		1.001	5.842	650
715	115.897	118.304		0.16	0.16	1.30	1.06	0.26	90	89	76	2.02	0.00	85	0.015	96	97	189.8	-0.03	0.70	15.6	111.3	185.7	181.5	74.0	185.3	212	81	81	76		1.001	5.842	651
716	116.058	118.466		0.16	0.16	1.30	1.06	0.26	90	89	76	2.01	0.00	84	0.014	100	99	189.6	0.19	0.70	15.5	111.4	185.8	181.7	74.0	185.4	208	81	80	76		1.001	5.844	652
717	116.219	118.629		0.16	0.16	1.30	1.06	0.26	90	89	76	2.01	0.00	83	0.014	100	99	189.6	0.05	0.68	15.5	111.6	185.9	181.8	73.9	185.5	205	80	80	76		1.001	5.674	634
718	116.380	118.792		0.16	0.16	1.30	1.07	0.26	90	89	76	2.01	0.00	83	0.013	103	103	189.5	0.07	0.66	15.7	111.7	186.0	182.0	73.9	185.7	201	79	79	76		1.001	5.459	611
719	116.542	118.955		0.16	0.16	1.30	1.07	0.26	90	89	76	2.01	0.00	82	0.016	94	93	189.3	0.17	0.66	15.5	111.8	186.0	182.1	73.9	185.7	200	79	79	76		1.001	5.493	615
720	116.703	119.120		0.16	0.17	1.31	1.07	0.26	90	89	76	2.01	0.00	80	0.014	99	100	189.4	-0.03	0.70	15.5	111.9	186.0	182.4	73.9	185.7	198	78	79	76		1.001	5.839	654
721	116.865	119.284		0.16	0.16	1.30	1.08	0.26	90	89	76	2.01	0.00	80	0.014	100	100	189.4	-0.04	0.64	15.4	111.9	186.0	182.3	73.9	185.8	196	78	79	76		1.001	5.353	600
722	117.026	119.448		0.16	0.16	1.30	1.07	0.26	90	89	76	1.99	0.00	80	0.015	96	96	189.3	0.10	0.64	15.6	111.9	186.0	182.1	73.8	185.7	194	78	79	76		1.001	5.350	599
723	117.187	119.612		0.16	0.16	1.30	1.08	0.26	90	89	76	1.99	0.00	79	0.014	99	100	189.3	0.05	0.68	15.5	112.0	186.1	182.2	73.8	185.8	191	78	79	76		1.001	5.676	636
724	117.349	119.776		0.16	0.16	1.30	1.08	0.26	90	89	76	2.01	0.00	79	0.014	100	100	189.3	0.01	0.66	15.5	112.0	186.1	182.2	73.8	185.8	189	78	78	76		1.001	5.515	618
725	117.510	119.941		0.16	0.17	1.30	1.09	0.26	90	89	76	1.99	0.00	79	0.012	107	108	189.2	0.05	0.66	15.6	112.0	186.2	182.2	73.8	185.8	186	78	78	76		1.001	5.508	618
726	117.672	120.106		0.16	0.16	1.30	1.09	0.26	90	89	76	1.99	0.00	79	0.015	96	97	189.4	-0.20	0.68	15.5	112.0	186.1	182.2	73.8	185.8	184	78	78	76		1.001	5.673	636
727	117.833	120.271		0.16	0.17	1.31	1.09	0.26	90	89	76	2.00	0.00	79	0.014	99	100	189.3	0.08	0.62	15.4	112.0	186.1	182.2	73.8	185.8	182	78	78	76		1.001	5.188	582
728	117.995	120.437		0.16	0.17	1.30	1.09	0.26	90	89	76	1.99	0.00	79	0.014	100	101	189.2	0.11	0.67	15.4	112.0	186.1	182.1	73.8	185.8	179	78	78	76		1.001	5.561	624
729	118.156	120.601		0.16	0.16	1.30	1.09	0.26	90	89	76	1.99	0.00	79	0.014	99	100	189.2	0.02	0.62	15.5	112.0	186.0	182.1	73.7	185.7	177	78	78	76		1.001	5.188	581
730	118.318	120.766		0.16	0.17	1.30	1.08	0.26	90	89	76	2.00	0.00	79	0.015	96	97	189.3	-0.10	0.64	15.4	111.9	186.0	182.1	73.7	185.7	175	78	78	76		1.001	5.350	600
731	118.479	120.931		0.16	0.16	1.30	1.09	0.26	90	89	76	2.00	0.00	79	0.015	96	97	189.4	-0.07	0.64	15.5	111.9	186.0	182.2	73.8	185.7	173	78	78	76		1.001	5.351	600
732	118.641	121.096		0.16	0.17	1.30	1.09	0.26	90	89	76	2.00	0.00	79	0.015	96	97	189.2	0.14	0.66	15.5	111.9	186.0	182.0	73.7	185.7	171	78	78	76		1.001	5.512	618
733	118.802	121.261		0.16	0.16	1.31	1.09	0.26	90	89	76	2.00	0.00	79	0.012	107	108	189.2	0.05	0.66	15.4	111.8	185.9	182.0	73.8	185.6	169	78	78	76		1.001	5.511	617
734	118.964	121.426		0.16	0.17	1.31	1.09	0.26	90	89	76	1.99	0.00	79	0.015	96	97	189.4	-0.19	0.68	15.5	111.8	185.9	181.9	73.8	185.6	167	78	78	76		1.001	5.671	635

Elapsed Time	Particulate Sampling Data																		Fuel Weight, lb		Flow, gpm		Temperature Data, oF													
	Gas Meter Cubic Feet (1)	Gas Meter Cubic Feet (2)	Gas Meter Cubic Feet (amb)	Sample Rate, cfm (1)	Sample Rate, cfm (2)	Orifice dH (1)	Orifice dH (2)	Orifice dH (amb)	Meter oF (1)	Meter oF (2)	Meter oF (amb)	Meter Vac. In. Hg. (1)	Meter Vac. In. Hg. (2)	Dilution Tunnel Temp.	Dilution Tunnel dP	Pro. Rate (%) (1)	Pro. Rate (%) (2)	Scale Reading	Weight Change	Load Side Liquid Flow Rate	Boiler Side Liquid Flow Rate (optional)	Thermopile ΔT	Boiler to Heat Exch. Temp.	Heat Exch to Boiler Temp.	Inlet Load Temp.	Outlet Load Temp.	Stack	Filter (1)	Filter (2)	Ambient		Specific Heat of Inlet Water (BTU/lb-°F)	Mass Flow Rate of Inlet Water (lb/min)	Heat Output, Btu
735	119.126	121.591		0.16	0.16	1.30	1.09	0.26	90	89	76	1.99	0.00	79	0.015	96	97	189.3	0.08	0.65	15.5	111.8	185.8	181.9	73.8	185.5	166	78	78	76		1.001	5.423	607
736	119.287	121.757		0.16	0.17	1.31	1.09	0.26	90	89	76	1.99	0.00	78	0.016	93	94	189.2	0.03	0.66	15.4	111.7	185.7	181.8	73.8	185.4	164	77	78	76		1.001	5.513	616
737	119.449	121.922		0.16	0.16	1.30	1.09	0.26	90	89	76	2.00	0.00	78	0.015	96	97	189.3	-0.04	0.66	15.5	111.7	185.7	181.9	73.7	185.4	162	77	78	76		1.001	5.513	617
738	119.611	122.087		0.16	0.17	1.31	1.09	0.26	90	89	76	2.00	0.00	78	0.014	100	100	189.4	-0.13	0.68	15.5	111.6	185.7	181.8	73.8	185.4	161	77	78	76		1.001	5.674	634
739	119.773	122.251		0.16	0.16	1.31	1.08	0.26	90	89	76	1.98	0.00	78	0.016	93	93	189.3	0.18	0.66	15.5	111.6	185.6	181.7	73.7	185.3	159	77	78	76		1.001	5.515	616
740	119.934	122.417		0.16	0.17	1.31	1.09	0.26	90	89	76	2.00	0.00	78	0.014	99	101	189.4	-0.15	0.66	15.5	111.5	185.5	181.6	73.7	185.2	158	77	77	76		1.001	5.513	615
741	120.096	122.581		0.16	0.16	1.31	1.09	0.26	90	89	76	1.99	0.00	78	0.013	103	103	189.4	0.02	0.66	15.5	111.4	185.5	181.5	73.7	185.2	156	77	77	76		1.001	5.511	615
742	120.257	122.747		0.16	0.17	1.31	1.09	0.26	90	89	76	1.99	0.00	78	0.014	99	101	189.4	-0.02	0.64	15.4	111.4	185.4	181.5	73.7	185.1	155	77	77	76		1.001	5.350	596
743	120.419	122.912		0.16	0.17	1.31	1.09	0.26	90	89	76	2.00	0.00	78	0.015	96	97	189.4	0.02	0.64	15.5	111.3	185.3	181.4	73.7	185.0	154	77	77	76		1.001	5.352	596
744	120.581	123.077		0.16	0.16	1.31	1.09	0.26	90	89	76	2.00	0.00	78	0.016	93	94	189.4	0.00	0.62	15.5	111.2	185.2	181.4	73.7	184.9	153	77	77	76		1.001	5.189	578
745	120.742	123.243		0.16	0.17	1.31	1.09	0.26	90	89	76	2.00	0.00	78	0.014	99	101	189.4	-0.03	0.65	15.5	111.1	185.1	181.2	73.7	184.8	151	77	77	76		1.001	5.382	599
746	120.904	123.407		0.16	0.16	1.30	1.09	0.26	90	89	76	1.99	0.00	78	0.015	96	96	189.4	-0.02	0.68	15.5	111.1	185.1	181.2	73.7	184.8	150	77	77	76		1.001	5.673	631
747	121.066	123.572		0.16	0.17	1.31	1.08	0.26	90	89	76	1.98	0.00	78	0.013	103	104	189.3	0.15	0.64	15.4	111.0	185.0	181.1	73.7	184.7	149	77	77	76		1.001	5.350	595
748	121.227	123.737		0.16	0.16	1.31	1.09	0.26	90	89	76	2.00	0.00	78	0.016	93	94	189.4	-0.15	0.66	15.5	110.9	184.9	181.0	73.7	184.6	148	77	77	76		1.001	5.513	612
749	121.389	123.902		0.16	0.17	1.31	1.09	0.26	90	89	76	1.99	0.00	78	0.014	100	100	189.4	0.00	0.68	15.4	110.9	184.8	181.0	73.6	184.5	147	77	77	76		1.001	5.675	630
750	121.551	124.067		0.16	0.16	1.31	1.08	0.26	90	89	76	2.00	0.00	78	0.013	103	104	189.4	0.07	0.68	15.5	110.8	184.7	180.9	73.6	184.4	146	77	77	76		1.001	5.676	630
751	121.712	124.232		0.16	0.17	1.31	1.09	0.26	90	89	76	2.00	0.00	78	0.015	96	97	189.5	-0.17	0.68	15.5	110.7	184.6	180.8	73.6	184.3	146	77	77	76		1.001	5.674	629
752	121.874	124.397		0.16	0.17	1.31	1.09	0.26	90	89	76	1.99	0.00	78	0.015	96	97	189.4	0.16	0.66	15.5	110.7	184.5	180.6	73.6	184.2	145	77	77	76		1.001	5.512	611
753	122.035	124.563		0.16	0.17	1.31	1.09	0.26	90	89	76	2.00	0.00	78	0.013	103	105	189.4	-0.05	0.64	15.5	110.6	184.5	180.6	73.6	184.2	144	77	77	76		1.001	5.350	592
754	122.197	124.728		0.16	0.16	1.31	1.09	0.26	90	89	76	2.00	0.00	78	0.014	100	100	189.4	0.04	0.68	15.4	110.4	184.3	180.4	73.6	184.0	143	77	77	76		1.001	5.625	622
755	122.359	124.892		0.16	0.16	1.31	1.08	0.26	90	89	76	1.99	0.00	78	0.016	93	93	189.4	0.00	0.66	15.5	110.4	184.2	180.6	73.6	183.9	142	77	77	76		1.001	5.511	609
756	122.520	125.057		0.16	0.17	1.31	1.08	0.26	90	89	76	1.98	0.00	78	0.015	96	97	189.5	-0.08	0.68	15.5	110.2	184.1	180.4	73.6	183.8	141	77	77	76		1.001	5.672	626
757	122.682	125.222		0.16	0.16	1.31	1.09	0.26	90	89	76	2.00	0.00	78	0.014	100	100	189.5	-0.03	0.68	15.4	110.1	184.0	180.1	73.6	183.7	140	77	77	76		1.001	5.672	625
758	122.843	125.387		0.16	0.17	1.31	1.09	0.26	90	89	76	1.99	0.00	78	0.012	107	108	189.5	0.01	0.64	15.4	109.9	183.9	180.0	73.7	183.6	139	77	77	76		1.001	5.350	589
759	123.005	125.552		0.16	0.17	1.30	1.09	0.26	90	89	76	1.99	0.00	78	0.015	96	97	189.3	0.19	0.64	15.5	109.8	183.8	179.9	73.7	183.5	139	77	77	76		1.001	5.345	588
760	123.167	125.717		0.16	0.16	1.31	1.09	0.26	90	89	76	1.99	0.00	78	0.013	103	104	189.4	-0.11	0.68	15.5	109.7	183.7	179.9	73.7	183.4	138	77	77	76		1.001	5.676	623
761	123.328	125.883		0.16	0.17	1.31	1.09	0.26	90	89	76	2.00	0.00	78	0.014	99	101	189.6	-0.19	0.66	15.5	109.5	183.6	179.7	73.7	183.2	138	77	77	76		1.001	5.510	604
762	123.490	126.048		0.16	0.17	1.31	1.09	0.26	90	89	76	1.99	0.00	78	0.014	100	100	189.4	0.19	0.66	15.4	109.4	183.4	179.6	73.8	183.1	137	77	77	76		1.001	5.511	603
763	123.652	126.213		0.16	0.16	1.31	1.08	0.26	90	89	76	1.99	0.00	78	0.013	103	104	189.4	-0.02	0.66	15.5	109.2	183.3	179.5	73.8	183.0	137	77	77	76		1.001	5.515	603
764	123.813	126.377		0.16	0.16	1.31	1.08	0.26	90	89	76	1.99	0.00	78	0.013	103	103	189.5	-0.06	0.60	15.4	109.1	183.2	179.7	73.8	182.9	136	77	77	76		1.001	5.027	549
765	123.975	126.542		0.16	0.17	1.31	1.09	0.26	90	89	76	2.00	0.00	78	0.014	100	100	189.5	0.03	0.66	15.5	109.0	183.1	179.2	73.8	182.8	135	77	77	76		1.001	5.512	602
766	124.136	126.707		0.16	0.16	1.31	1.09	0.26	90	89	76	1.99	0.00	78	0.013	103	104	189.4	0.11	0.66	15.5	108.9	183.0	179.2	73.8	182.7	135	77	77	76		1.001	5.509	601
767	124.298	126.872		0.16	0.17	1.31	1.09	0.26	90	89	76	2.00	0.00	78	0.014	100	100	189.6	-0.22	0.66	15.4	108.7	182.8	179.1	73.8	182.6	134	77	77	76		1.001	5.512	600
768	124.460	127.037		0.16	0.17	1.31	1.09	0.26	90	89	76	2.00	0.00	78	0.014	100	100	189.6	0.02	0.60	15.5	108.6	182.8	179.1	73.9	182.5	133	77	77	76		1.001	5.025	546
769	124.621	127.202		0.16	0.16	1.31	1.09	0.26	90	89	76	1.99	0.00	78	0.016	93	94	189.6	0.00	0.66	15.5	108.5	182.6	178.8	73.8	182.3	133	77	77	76		1.001	5.512	599
770	124.783	127.367		0.16	0.17	1.31	1.08	0.26	90	89	76	1.99	0.00	78	0.013	103	104	189.5	0.07	0.64	15.4	108.4	182.5	178.9	73.8	182.2	133	77	77	76		1.001	5.348	580
771	124.944	127.532		0.16	0.16	1.31	1.09	0.26	90	89	76	1.99	0.00	78	0.014	99	100	189.6	-0.10	0.64	15.4	108.2	182.4	178.8	73.8	182.1	132	77	77	76		1.001	5.351	580
772	125.106	127.697		0.16	0.17	1.31	1.08	0.26	90	89	76	1.98	0.00	78	0.016	93	94	189.6	0.05	0.62	15.4	108.1	182.3	178.8	73.8	181.9	132	77	77	76		1.001	5.185	561
773	125.268	127.861		0.16	0.16	1.31	1.09	0.26	90	89	76	2.00	0.00	78	0.014	100	100	189.6	-0.02	0.64	15.5	108.0	182.1	178.5	73.8	181.8	131	77	77	76		1.001	5.348	578
774	125.429	128.026		0.16	0.17	1.31	1.09	0.26	90	89	76	2.00	0.00	78	0.016	93	94	189.5	0.10	0.64	15.4	107.9	182.0	178.2	73.9	181.7	130	77	77	76		1.001	5.349	578
775	125.591	128.191		0.16	0.16	1.31	1.09	0.26	90	89	76	1.99	0.00	78	0.013	103	104	189.5	0.00	0.66	15.4	107.8	181.9	178.1	73.8	181.6	130	77	77	76		1.001	5.512	595
776	125.752	128.356		0.16	0.16	1.31	1.08	0.26	90	89	76	2.00	0.00	78	0.016	93	94	189.3	0.19	0.66	15.5	107.6	181.8	177.9	73.8	181.5	129	77	77	76		1.001	5.509	594
777	125.914	128.521		0.16	0.16	1.31	1.09	0.26	90	89	76	1.99	0.00	78	0.013	103	104	189.7	-0.41	0.64	15.4	107.5	181.6	177.8	73.8	181.3	129	77	77	76		1.001	5.349	576
778	126.075	128.687		0.16	0.17	1.31	1.09	0.26	90	89	76	1.99	0.00	78	0.014	99	101	189.4	0.25	0.68	15.5	107.4	181.5	177.7	73.8	181.2	129	77	77	76		1.001	5.669	610
779	126.237	128.852		0.16	0.16	1.31	1.09	0.26	90	89	76	1.99	0.00	78	0.015	96	97	189.3	0.10	0.68	15.5	107.4	181.4	177.6	73.8	181.1	154	77	77	76		1.001	5.671	610
780	126.398	129.016		0.16	0.16	1.31	1.07	0.26	90	89	76	2.02	0.00	88	0.014	100	101	189.1	0.25	0.64	15.5	107.2	181.2	177.5	73.8	181.0	156	79	79	76		1.001	5.348	574
781	126.560	129.180		0.16	0.16	1.32	1.09	0.26	90	89	76	2.00	0.00	80	0.016	93	93	189.1	0.02	0.68	15.4	107.1	181.1	177.3	73.7	180.8	150	77	77	76		1.001	5.673	608
782	126.721	129.345		0.16	0.16	1.32	1.09	0.26	90	89	76	1.98	0.00	78	0.016	93	94	189.0	0.12	0.66	15.4	107.0	181.0	177.2	73.7	180.7	145	77	77	76		1.001	5.511	590
783	126.883	129.510		0.16	0.16	1.31	1.09	0.26	90	89	76	1.99	0.00	78	0.016	93	94	189.1	-0.16	0.64	15.5	107.0	180.9	177.1	73.6	180.6	142	77	77	76		1.001	5.348	573
784	127.045	129.675		0.16	0.17	1.31	1.09	0.26	90	89	76	2.00	0.00	78	0.015	96	97	189.2	-0.03	0.64	15.5	106.9	180.7	176.9	73.6	180.4	139	77	77	76		1.001	5.348	572
785	127.207	129.841		0.16	0.17	1.31	1.09	0.26	90	89	76	2.00	0.00	78	0.015	96	97	189.0	0.12	0.66	15.4	106.8	180.6	176.8	73.5	180.3	137	77	77	76		1.001	5.510	589
786	127.369	130.006		0.16	0.16	1.32	1.09	0.26	90	89	76	1.98	0.00	78	0.016	93	94	189.0	-0.01	0.64	15.5	106.7	180.5	176.7	73.5	180.2	135	77	78	76		1.001	5.347	571
787	127.530	130.171		0.16	0.16	1.31	1.09	0.26	90	89	76	1.99	0.00	78	0.014	99	100	189.3	-0.23	0.64	15.4	106.6	180.3	176.7	73.4	180.0	133	77	78	76		1.001	5.340	570
788	127.692	130.336		0.16	0.17	1.32	1.09	0.26	90	89	76	1.99	0.00	78	0.014	100	100	189.0	0.23	0.66	15.6	106.6	180.2	176.4	73.3	179.9	132	77	78	76		1.001	5.509	588
789	127.854	130.501		0.16	0.16	1.32	1.09	0.26	90	89	76	1.98	0.00	78	0.015	96	97	189.1	-0.05	0.64	15.5	106.5	180.0	176.3	73.3	179.8	131	77	78	76		1.001	5.349	570
790	128.015	130.666		0.16	0.16	1.31	1.09	0.26	90	89	76	1.99	0.00	78	0.016	93	94	189.0	0.06	0.68	15.5	106.4	180.0	176.2	73.3	179.7	129	77	78	76		1.001	5.676	605
791	128.177	130.831		0.16	0.16	1.31	1.09	0.26	90	89	76	1.99	0.00	78	0.015	96	97	189.1	-0.06	0.72	15.4	106.3	179.8	175.7	73.2	179.5	128	77	78	76		1.001	5.997	638
792	128.339	130.996		0.16	0.17	1.32	1.09	0.26	90	89	76	1.99	0.00	78	0.015	96	97	189.2	-0.16	0.68	15.5	106.2	179.7	175.7	73.2	179.4	128	77	78	76		1.001	5.675	603
793	128.500	131.161		0.16	0.16	1.31	1.09	0.26	90	89	76	1.98	0.00	78	0.014	99	100	189.2	0.08	0.66	15.5	106.1	179.5	175.6	73.2	179.3	127	77	78	76		1.001	5.510	585
794	128.662	131.327		0.16	0.17	1.31	1.09	0.26	90	89	77	1.99	0.00	78	0.014	100	101	189.0	0.17	0.66	15.5	105.9	179.3	175.4	73.2	179.1	127	77	78	77		1.001	5.513	584
795	128.824	131.493		0.16	0.17	1.31	1.09	0.26	90	89	77	2.00	0.00	78	0.014	100	101	189.0	0.02	0.66	15.5	105.8	179.2	175.3	73.2	179.0	126	77	78	77		1.001	5.514	584
796	128.986	131.658		0.16	0.16	1.32	1.09	0.26	90	89	76	1.98	0.00	78	0.015	96	97	189.0	-0.07	0.68	15.4	105.6	179.1	175.2	73.2	178.8	125	77	78	76		1.001	5.666	599

Elapsed Time	Particulate Sampling Data																	Fuel Weight, lb		Flow, gpm		Temperature Data, oF												
	Gas Meter Cubic Feet (1)	Gas Meter Cubic Feet (2)	Gas Meter Cubic Feet (amb)	Sample Rate, cfm (1)	Sample Rate, cfm (2)	Orifice dH (1)	Orifice dH (2)	Orifice dH (amb)	Meter oF (1)	Meter oF (2)	Meter oF (amb)	Meter Vac. In. Hg. (1)	Meter Vac. In. Hg. (2)	Dilution Tunnel Temp.	Dilution Tunnel dP	Pro. Rate (%) (1)	Pro. Rate (%) (2)	Scale Reading	Weight Change	Load Side Liquid Flow Rate	Boiler Side Liquid Flow Rate (optional)	Thermopile ΔT	Boiler to Heat Exch. Temp.	Heat Exch to Boiler Temp.	Inlet Load Temp.	Outlet Load Temp.	Stack	Filter (1)	Filter (2)	Ambient		Specific Heat of Inlet Water (BTU/lb-°F)	Mass Flow Rate of Inlet Water (lb/min)	Heat Output, Btu
797	129.148	131.823		0.16	0.17	1.31	1.09	0.26	90	89	76	1.99	0.00	78	0.015	96	97	189.1	-0.10	0.69	15.5	105.4	179.0	175.0	73.2	178.7	125	77	78	76		1.001	5.745	607
798	129.309	131.988		0.16	0.16	1.31	1.09	0.26	90	89	77	1.98	0.00	78	0.015	96	97	189.4	-0.21	0.72	15.5	105.3	178.8	174.9	73.2	178.5	125	77	78	77		1.001	5.996	632
799	129.471	132.153		0.16	0.16	1.31	1.09	0.26	90	89	76	2.00	0.00	78	0.014	100	100	189.2	0.17	0.70	15.5	105.1	178.7	174.8	73.3	178.4	124	77	78	76		1.001	5.835	614
800	129.633	132.318		0.16	0.17	1.32	1.09	0.26	90	89	77	1.99	0.00	78	0.013	103	104	189.0	0.18	0.66	15.5	104.9	178.5	174.8	73.3	178.2	123	78	78	77		1.001	5.513	579
801	129.795	132.483		0.16	0.16	1.31	1.09	0.26	90	89	76	1.98	0.00	78	0.014	100	100	189.2	-0.16	0.68	15.4	104.7	178.3	174.6	73.3	178.0	123	78	78	76		1.001	5.673	595
802	129.957	132.648		0.16	0.16	1.31	1.09	0.26	90	89	76	1.98	0.00	78	0.014	100	100	189.2	-0.05	0.62	15.5	104.6	178.2	174.4	73.3	177.9	123	77	78	76		1.001	5.186	543
803	130.118	132.814		0.16	0.17	1.31	1.09	0.26	90	89	76	1.99	0.00	78	0.014	99	101	189.1	0.10	0.66	15.5	104.4	178.0	174.3	73.4	177.8	122	78	78	76		1.001	5.512	576
804	130.280	132.980		0.16	0.17	1.31	1.09	0.26	90	89	77	1.99	0.00	78	0.015	96	97	189.1	0.01	0.60	15.5	104.2	177.9	174.0	73.4	177.6	121	77	78	77		1.001	5.026	524
805	130.442	133.144		0.16	0.16	1.32	1.09	0.26	90	89	77	1.98	0.00	78	0.014	100	100	189.0	0.09	0.70	15.5	104.1	177.8	174.0	73.4	177.5	121	77	78	77		1.001	5.834	608
806	130.604	133.310		0.16	0.17	1.32	1.09	0.26	90	89	77	1.99	0.00	78	0.016	93	94	189.2	-0.18	0.64	15.6	103.9	177.6	174.1	73.4	177.3	120	77	78	77		1.001	5.348	556
807	130.765	133.474		0.16	0.16	1.31	1.08	0.26	90	89	77	2.00	0.00	78	0.015	96	96	189.0	0.19	0.58	15.5	103.7	177.5	174.0	73.4	177.2	121	78	78	77		1.001	4.862	505
808	130.927	133.639		0.16	0.17	1.31	1.09	0.26	90	89	77	2.00	0.00	78	0.015	96	97	189.3	-0.28	0.66	15.5	103.6	177.3	173.6	73.5	177.0	121	78	78	77		1.001	5.511	571
809	131.089	133.804		0.16	0.16	1.31	1.09	0.26	90	89	77	2.00	0.00	78	0.014	100	100	189.2	0.10	0.68	15.5	103.4	177.2	173.4	73.5	176.9	120	78	78	77		1.001	5.672	587
810	131.251	133.970		0.16	0.17	1.31	1.09	0.26	90	89	77	2.00	0.00	78	0.015	96	97	189.0	0.21	0.66	15.4	103.3	177.0	173.3	73.5	176.8	146	78	78	77		1.001	5.510	570
811	131.412	134.134		0.16	0.16	1.31	1.08	0.26	90	89	77	1.99	0.00	84	0.014	100	100	188.9	0.02	0.66	15.5	103.1	176.9	173.2	73.5	176.6	145	78	79	77		1.001	5.510	569
812	131.574	134.300		0.16	0.17	1.32	1.09	0.26	90	89	77	1.99	0.00	79	0.014	100	101	189.1	-0.11	0.68	15.4	103.0	176.7	173.0	73.5	176.5	140	78	78	77		1.001	5.673	585
813	131.735	134.465		0.16	0.16	1.31	1.09	0.26	90	89	77	1.99	0.00	78	0.015	96	97	188.9	0.17	0.68	15.5	102.8	176.6	172.8	73.5	176.3	136	78	78	77		1.001	5.671	584
814	131.897	134.630		0.16	0.16	1.31	1.09	0.26	90	89	77	1.99	0.00	78	0.014	100	100	188.8	0.07	0.67	15.5	102.7	176.4	172.7	73.5	176.2	133	78	78	77		1.001	5.533	569
815	132.059	134.795		0.16	0.16	1.32	1.08	0.26	90	89	77	1.98	0.00	78	0.013	103	104	188.9	-0.05	0.67	15.4	102.6	176.3	172.6	73.5	176.0	130	78	78	77		1.001	5.540	569
816	132.221	134.960		0.16	0.17	1.32	1.09	0.26	90	89	77	1.98	0.00	78	0.014	100	100	188.7	0.15	0.66	15.5	102.5	176.1	172.4	73.4	175.9	129	78	78	77		1.001	5.509	565
817	132.382	135.125		0.16	0.16	1.31	1.09	0.26	90	89	77	1.99	0.00	78	0.015	96	97	188.8	-0.06	0.64	15.5	102.4	176.0	172.3	73.3	175.7	127	78	78	77		1.001	5.347	548
818	132.544	135.290		0.16	0.16	1.32	1.09	0.26	90	89	77	1.98	0.00	78	0.016	93	94	188.8	0.00	0.66	15.5	102.3	175.8	172.0	73.2	175.5	126	78	78	77		1.001	5.507	564
819	132.706	135.455		0.16	0.17	1.32	1.09	0.26	90	89	77	2.00	0.00	78	0.015	96	97	188.9	-0.10	0.70	15.5	102.3	175.7	171.9	73.1	175.4	125	78	78	77		1.001	5.835	598
820	132.868	135.621		0.16	0.17	1.32	1.09	0.26	90	89	77	1.99	0.00	78	0.013	103	105	188.8	0.11	0.70	15.4	102.3	175.5	171.7	73.0	175.2	124	78	78	77		1.001	5.835	598
821	133.030	135.787		0.16	0.17	1.32	1.09	0.26	90	89	77	1.98	0.00	78	0.014	100	101	188.8	0.00	0.66	15.4	102.2	175.4	171.6	72.9	175.1	123	78	78	77		1.001	5.511	564
822	133.191	135.952		0.16	0.16	1.32	1.09	0.26	90	89	77	1.99	0.00	78	0.015	96	97	188.9	-0.11	0.68	15.5	102.2	175.3	171.5	72.8	175.0	123	78	78	77		1.001	5.671	580
823	133.353	136.117		0.16	0.16	1.31	1.09	0.26	90	89	77	1.98	0.00	78	0.014	100	100	189.0	-0.14	0.68	15.6	102.1	175.1	171.3	72.7	174.8	123	78	78	77		1.001	5.674	580
824	133.515	136.282		0.16	0.17	1.32	1.08	0.26	90	89	77	1.99	0.00	78	0.013	103	104	188.8	0.24	0.68	15.5	102.0	174.9	171.3	72.6	174.7	122	78	78	77		1.001	5.656	578
825	133.677	136.447		0.16	0.16	1.32	1.09	0.26	90	89	77	1.99	0.00	78	0.014	100	100	188.7	0.06	0.70	15.5	101.9	174.8	171.0	72.6	174.5	121	78	78	77		1.001	5.835	595
826	133.839	136.612		0.16	0.16	1.31	1.09	0.26	90	89	77	2.00	0.00	78	0.013	103	104	188.9	-0.18	0.70	15.3	101.8	174.6	170.8	72.6	174.4	121	78	78	77		1.001	5.834	595
827	134.001	136.777		0.16	0.16	1.32	1.09	0.26	90	89	77	1.99	0.00	78	0.015	96	97	188.8	0.05	0.70	15.5	101.6	174.5	170.7	72.6	174.2	120	78	78	77		1.001	5.833	594
828	134.163	136.942		0.16	0.17	1.32	1.09	0.26	90	89	77	1.98	0.00	78	0.015	96	97	188.8	-0.01	0.66	15.5	101.5	174.4	170.6	72.6	174.1	120	78	78	77		1.001	5.511	560
829	134.325	137.107		0.16	0.16	1.32	1.09	0.26	90	89	77	1.98	0.00	78	0.015	96	97	188.9	-0.06	0.68	15.4	101.3	174.2	170.5	72.6	174.0	119	78	78	77		1.001	5.673	576
830	134.487	137.273		0.16	0.17	1.32	1.09	0.26	90	89	77	1.99	0.00	78	0.014	100	101	188.9	0.00	0.70	15.5	101.1	174.0	170.3	72.7	173.8	119	78	78	77		1.001	5.835	590
831	134.648	137.438		0.16	0.16	1.31	1.09	0.26	90	89	77	2.00	0.00	78	0.013	103	104	188.9	0.00	0.72	15.5	100.9	173.9	170.2	72.7	173.6	119	78	78	77		1.001	6.001	606
832	134.810	137.603		0.16	0.17	1.32	1.09	0.26	90	89	77	1.99	0.00	78	0.014	100	100	189.0	-0.10	0.70	15.5	100.7	173.7	170.0	72.8	173.4	118	78	78	77		1.001	5.835	588
833	134.972	137.769		0.16	0.17	1.32	1.09	0.26	90	89	77	1.99	0.00	78	0.014	100	101	188.9	0.10	0.73	15.5	100.5	173.6	169.9	72.8	173.3	118	78	78	77		1.001	6.064	610
834	135.134	137.933		0.16	0.16	1.32	1.09	0.26	90	89	77	1.99	0.00	78	0.016	93	93	188.8	0.04	0.64	15.5	100.4	173.4	169.8	72.8	173.2	117	78	78	77		1.001	5.346	537
835	135.296	138.099		0.16	0.17	1.32	1.09	0.26	90	89	77	1.98	0.00	78	0.016	93	94	188.8	0.07	0.66	15.5	100.2	173.3	169.6	72.9	173.0	117	78	78	77		1.001	5.508	552
836	135.457	138.264		0.16	0.17	1.32	1.09	0.26	90	89	77	1.98	0.00	78	0.015	96	97	188.9	-0.16	0.70	15.5	100.0	173.1	169.5	72.9	172.9	117	78	78	77		1.001	5.832	584
837	135.619	138.429		0.16	0.16	1.32	1.09	0.26	90	89	77	1.99	0.00	78	0.014	100	100	188.9	0.02	0.70	15.5	99.7	172.9	169.3	72.9	172.7	116	78	78	77		1.001	5.831	582
838	135.781	138.594		0.16	0.16	1.32	1.09	0.26	90	89	77	1.99	0.00	78	0.016	93	94	188.8	0.16	0.72	15.4	99.6	172.8	169.1	72.9	172.5	117	78	78	77		1.001	5.992	597
839	135.943	138.760		0.16	0.17	1.32	1.09	0.26	90	89	77	1.99	0.00	78	0.015	96	97	189.0	-0.23	0.68	15.5	99.4	172.6	169.0	72.9	172.4	116	78	78	77		1.001	5.669	564
840	136.105	138.925		0.16	0.17	1.31	1.09	0.26	90	89	77	2.00	0.00	78	0.015	96	97	188.9	0.10	0.68	15.5	99.3	172.5	168.9	72.9	172.3	115	78	78	77		1.001	5.678	565
841	136.267	139.090		0.16	0.16	1.32	1.08	0.26	90	89	77	2.00	0.00	79	0.015	96	97	188.8	0.13	0.70	15.5	99.1	172.3	168.7	72.9	172.1	142	78	78	77		1.001	5.831	579
842	136.428	139.255		0.16	0.16	1.31	1.09	0.26	90	89	77	1.99	0.00	83	0.015	96	97	188.7	0.02	0.65	15.5	99.0	172.2	168.5	72.9	171.9	139	78	78	77		1.001	5.429	538
843	136.590	139.420		0.16	0.16	1.31	1.09	0.26	90	89	77	1.99	0.00	79	0.016	93	94	188.8	-0.04	0.65	15.5	98.9	172.0	168.4	72.9	171.8	134	78	78	77		1.001	5.434	538
844	136.752	139.585		0.16	0.17	1.32	1.09	0.26	90	89	77	1.99	0.00	79	0.016	93	94	188.6	0.15	0.70	15.5	98.8	171.9	168.3	72.9	171.6	131	78	78	77		1.001	5.833	577
845	136.914	139.750		0.16	0.16	1.32	1.09	0.26	90	89	78	1.98	0.00	79	0.014	100	100	188.6	0.04	0.70	15.5	98.5	171.6	168.1	72.9	171.4	128	78	78	78		1.001	5.830	575
846	137.076	139.915		0.16	0.16	1.31	1.09	0.26	90	89	78	1.99	0.00	79	0.016	93	94	188.7	-0.08	0.66	15.5	98.5	171.6	168.0	72.9	171.3	126	78	78	78		1.001	5.504	543
847	137.238	140.080		0.16	0.17	1.31	1.09	0.26	90	89	78	2.00	0.00	79	0.014	100	100	188.7	-0.07	0.68	15.5	98.4	171.4	167.8	72.8	171.2	125	78	78	78		1.001	5.668	558
848	137.399	140.246		0.16	0.17	1.31	1.09	0.26	90	89	77	1.98	0.00	79	0.016	93	94	188.8	-0.03	0.72	15.4	98.2	171.2	167.7	72.8	171.0	123	78	78	77		1.001	5.993	589
849	137.561	140.411		0.16	0.16	1.31	1.09	0.26	90	89	78	1.98	0.00	79	0.015	96	97	188.8	-0.08	0.72	15.5	98.1	171.0	167.5	72.7	170.8	122	78	78	78		1.001	5.979	587
850	137.723	140.576		0.16	0.16	1.31	1.09	0.26	91	90	78	1.99	0.00	79	0.014	100	100	188.8	0.08	0.68	15.4	97.9	170.9	167.4	72.7	170.7	121	78	78	78		1.001	5.667	556
851	137.885	140.741		0.16	0.17	1.31	1.09	0.26	91	90	78	1.98	0.00	79	0.013	103	104	188.8	-0.05	0.69	15.5	97.8	170.8	167.2	72.7	170.5	120	78	78	78		1.001	5.755	563
852	138.047	140.906		0.16	0.16	1.31	1.09	0.26	91	90	78	2.00	0.00	79	0.014	100	100	188.8	0.03	0.72	15.4	97.7	170.7	167.1	72.7	170.4	119	78	78	78		1.001	5.994	586
853	138.208	141.071		0.16	0.16	1.31	1.09	0.26	91	90	78	1.98	0.00	79	0.015	96	97	188.5	0.26	0.68	15.6	97.5	170.4	166.9	72.6	170.2	118	78	78	78		1.001	5.667	553
854	138.370	141.236		0.16	0.16	1.31	1.09	0.26	91	90	78	1.99	0.00	79	0.016	93	94	188.8	-0.24	0.64	15.5	97.4	170.3	166.8	72.7	170.1	119	78	78	78		1.001	5.341	521
855	138.532	141.401		0.16	0.17	1.31	1.09	0.26	91	90	78	1.99	0.00	79	0.015	96	97	188.6	0.13	0.70	15.4	97.3	170.1	166.6	72.6	169.9	118	78	78	78		1.001	5.831	568
856	138.694	141.567		0.16	0.17	1.31	1.09	0.26	91	90	78	1.98	0.00	79	0.016	93	94	188.7	-0.08	0.68	15.6	97.2	170.0	166.5	72.6	169.8	117	78	78	78		1.001	5.668	551
857	138.855	141.732		0.16	0.16	1.31	1.09	0.26	91	90	78	2.00	0.00	79	0.015	96	97	188.7	0.05	0.66	15.5	97.0	169.9	166.4	72.6	169.6	117	78	78	78		1.001	5.509	535
858	139.017	141.897		0.16	0.16	1.31	1.09	0.26	91	90	78	2.00	0.00	79	0.014	100	100	188.7	-0.02	0.68	15.5	96.9	169.7	166.2	72.6	169.5	117	78	78	78		1.001	5.670	550

Elapsed Time	Particulate Sampling Data																	Fuel Weight, lb		Flow, gpm		Temperature Data, oF													
	Gas Meter Cubic Feet (1)	Gas Meter Cubic Feet (2)	Gas Meter Cubic Feet (amb)	Sample Rate, cfm (1)	Sample Rate, cfm (2)	Orifice dH (1)	Orifice dH (2)	Orifice dH (amb)	Meter oF (1)	Meter oF (2)	Meter oF (amb)	Meter Vac. In. Hg. (1)	Meter Vac. In. Hg. (2)	Dilution Tunnel Temp.	Dilution Tunnel dP	Pro. Rate (%) (1)	Pro. Rate (%) (2)	Scale Reading	Weight Change	Load Side Liquid Flow Rate	Boiler Side Liquid Flow Rate (optional)	Thermopile ΔT	Boiler to Heat Exch. Temp.	Heat Exch to Boiler Temp.	Inlet Load Temp.	Outlet Load Temp.	Stack	Filter (1)	Filter (2)	Ambient		Specific Heat of Inlet Water (BTU/lb-°F)	Mass Flow Rate of Inlet Water (lb/min)	Heat Output, Btu
859	139.179	142.062		0.16	0.17	1.31	1.08	0.26	91	90	78	1.98	0.00	79	0.014	100	100	188.7	-0.01	0.70	15.5	96.7	169.5	166.1	72.6	169.3	117	78	78	78		1.001	5.831	564
860	139.341	142.227		0.16	0.16	1.31	1.09	0.26	91	90	78	1.98	0.00	79	0.015	96	97	188.5	0.15	0.65	15.5	96.6	169.4	165.9	72.6	169.2	116	78	78	78		1.001	5.379	520
861	139.503	142.392		0.16	0.16	1.31	1.09	0.26	91	90	78	2.00	0.00	79	0.013	103	104	188.7	-0.12	0.68	15.5	96.4	169.3	165.8	72.6	169.0	116	78	78	78		1.001	5.667	547
862	139.664	142.557		0.16	0.16	1.31	1.09	0.26	91	90	78	1.98	0.00	79	0.016	93	94	188.6	0.06	0.70	15.6	96.2	169.1	165.7	72.6	168.8	116	78	78	78		1.001	5.830	562
863	139.826	142.722		0.16	0.17	1.31	1.09	0.26	91	90	78	1.98	0.00	79	0.015	96	97	188.7	-0.09	0.70	15.5	96.1	169.0	165.5	72.6	168.8	116	78	78	78		1.001	5.829	561
864	139.988	142.887		0.16	0.16	1.31	1.09	0.26	91	90	78	1.98	0.00	79	0.014	100	100	188.6	0.08	0.68	15.4	95.9	168.8	165.3	72.7	168.6	115	78	78	78		1.001	5.668	544
865	140.150	143.053		0.16	0.17	1.31	1.09	0.26	91	90	78	1.98	0.00	79	0.013	103	105	188.6	0.00	0.64	15.5	95.7	168.7	165.3	72.7	168.5	115	78	78	78		1.001	5.341	512
866	140.312	143.219		0.16	0.17	1.31	1.09	0.26	91	90	78	1.98	0.00	79	0.015	96	97	188.7	-0.09	0.68	15.5	95.4	168.4	164.9	72.8	168.2	114	78	78	78		1.001	5.669	542
867	140.474	143.384		0.16	0.16	1.30	1.09	0.26	91	90	78	1.99	0.00	79	0.015	96	97	188.7	-0.04	0.72	15.4	95.3	168.3	164.8	72.8	168.1	114	78	78	78		1.001	5.991	572
868	140.636	143.549		0.16	0.17	1.31	1.09	0.26	91	90	78	1.99	0.00	79	0.015	96	97	188.8	-0.04	0.70	15.5	95.1	168.2	164.7	72.8	168.0	114	78	78	78		1.001	5.828	555
869	140.797	143.713		0.16	0.16	1.31	1.09	0.26	91	90	78	1.99	0.00	79	0.014	99	100	188.5	0.23	0.69	15.5	95.0	168.0	164.6	72.8	167.8	114	78	78	78		1.001	5.725	544
870	140.959	143.879		0.16	0.17	1.31	1.09	0.26	91	90	78	2.00	0.00	79	0.014	100	101	188.6	-0.05	0.70	15.5	94.8	167.9	164.5	72.9	167.7	114	78	78	78		1.001	5.830	553
871	141.121	144.044		0.16	0.17	1.30	1.09	0.26	91	90	78	1.99	0.00	79	0.014	100	100	188.6	-0.02	0.70	15.4	94.6	167.7	164.3	72.9	167.5	113	78	78	78		1.001	5.831	552
872	141.283	144.209		0.16	0.16	1.30	1.09	0.26	91	90	78	2.00	0.00	81	0.014	100	100	188.6	0.03	0.68	15.4	94.5	167.6	164.3	72.9	167.4	136	79	79	78		1.001	5.669	536
873	141.444	144.374		0.16	0.16	1.31	1.09	0.26	91	90	78	1.99	0.00	82	0.014	99	100	188.5	0.07	0.70	15.5	94.2	167.4	164.0	73.0	167.2	135	78	79	78		1.001	5.831	550
874	141.606	144.539		0.16	0.16	1.31	1.09	0.26	91	90	78	1.99	0.00	79	0.014	100	100	188.5	0.02	0.66	15.5	94.1	167.3	164.1	73.0	167.1	130	79	79	78		1.001	5.507	519
875	141.768	144.705		0.16	0.17	1.31	1.09	0.26	91	90	78	1.99	0.00	79	0.014	100	101	188.5	-0.02	0.70	15.5	93.9	167.1	163.7	73.0	166.9	127	79	79	78		1.001	5.830	548
876	141.930	144.870		0.16	0.16	1.30	1.08	0.26	91	90	78	1.99	0.00	79	0.013	103	104	188.4	0.10	0.70	15.4	93.8	167.0	163.6	73.0	166.8	124	78	79	78		1.001	5.829	547
877	142.091	145.035		0.16	0.16	1.31	1.09	0.26	91	90	78	1.99	0.00	79	0.014	99	100	188.5	-0.07	0.66	15.5	93.7	166.9	163.4	73.0	166.6	122	79	79	78		1.001	5.527	518
878	142.253	145.199		0.16	0.16	1.31	1.09	0.26	91	90	78	1.98	0.00	79	0.015	96	96	188.5	-0.02	0.59	15.5	93.5	166.7	163.4	73.0	166.5	120	79	79	78		1.001	4.866	456
879	142.415	145.365		0.16	0.17	1.31	1.09	0.26	91	90	78	1.98	0.00	79	0.014	100	101	188.5	-0.01	0.64	15.5	93.4	166.5	163.3	72.9	166.3	119	79	79	78		1.001	5.344	500
880	142.577	145.530		0.16	0.16	1.31	1.09	0.26	91	90	78	2.00	0.00	79	0.013	103	104	188.5	0.01	0.74	15.6	93.1	166.4	162.9	73.0	166.1	118	78	79	78		1.001	6.153	574
881	142.739	145.695		0.16	0.16	1.31	1.09	0.26	91	90	78	1.99	0.00	79	0.014	100	100	188.5	-0.01	0.66	15.5	93.1	166.2	162.7	72.9	166.0	118	78	79	78		1.001	5.510	513
882	142.901	145.860		0.16	0.17	1.31	1.09	0.26	91	90	78	1.98	0.00	79	0.013	103	104	188.5	0.07	0.72	15.5	93.0	166.1	162.6	72.9	165.9	117	78	79	78		1.001	5.995	558
883	143.062	146.026		0.16	0.17	1.31	1.09	0.26	91	90	78	1.99	0.00	79	0.017	90	91	188.3	0.12	0.72	15.5	92.9	166.0	162.5	72.9	165.8	116	79	79	78		1.001	5.994	557
884	143.224	146.191		0.16	0.16	1.31	1.09	0.26	91	90	78	1.99	0.00	79	0.013	103	104	188.4	-0.03	0.66	15.5	92.7	165.8	162.4	72.9	165.6	116	79	79	78		1.001	5.506	511
885	143.386	146.357		0.16	0.17	1.31	1.08	0.26	91	90	78	2.00	0.00	79	0.015	96	97	188.4	-0.07	0.70	15.5	92.6	165.7	162.3	72.9	165.5	115	79	79	78		1.001	5.831	540
886	143.548	146.521		0.16	0.16	1.31	1.09	0.26	91	90	78	1.99	0.00	79	0.014	100	100	188.5	-0.11	0.64	15.5	92.4	165.5	162.3	72.9	165.3	115	79	79	78		1.001	5.342	494
887	143.710	146.687		0.16	0.17	1.31	1.09	0.26	91	90	78	1.99	0.00	79	0.015	96	97	188.4	0.13	0.66	15.5	92.3	165.4	162.1	72.9	165.1	115	79	79	78		1.001	5.530	511
888	143.872	146.852		0.16	0.16	1.32	1.09	0.26	91	90	78	2.00	0.00	79	0.014	100	100	188.4	-0.02	0.70	15.5	92.1	165.2	161.8	72.9	165.0	114	79	79	78		1.001	5.831	537
889	144.034	147.017		0.16	0.16	1.31	1.09	0.26	91	90	78	1.99	0.00	79	0.015	96	97	188.4	0.00	0.70	15.4	91.9	165.0	161.6	72.9	164.8	114	79	79	78		1.001	5.832	537
890	144.196	147.182		0.16	0.16	1.32	1.09	0.26	91	90	78	2.00	0.00	79	0.015	96	97	188.4	0.02	0.70	15.5	91.8	164.9	161.6	72.9	164.7	113	79	79	78		1.001	5.830	536
891	144.358	147.347		0.16	0.17	1.31	1.09	0.26	91	90	78	1.99	0.00	79	0.015	96	97	188.5	-0.04	0.70	15.4	91.6	164.8	161.4	73.0	164.6	113	79	79	78		1.001	5.831	535
892	144.520	147.513		0.16	0.17	1.32	1.09	0.26	91	90	78	1.98	0.00	79	0.015	96	97	188.4	0.07	0.70	15.5	91.5	164.7	161.3	72.9	164.4	113	78	79	78		1.001	5.831	534
893	144.681	147.679		0.16	0.17	1.31	1.09	0.26	91	90	78	1.98	0.00	79	0.015	96	97	188.3	0.06	0.72	15.4	91.3	164.5	161.1	73.0	164.3	113	79	79	78		1.001	5.991	547
894	144.843	147.844		0.16	0.16	1.31	1.09	0.26	91	90	78	1.99	0.00	79	0.015	96	97	188.4	-0.07	0.70	15.5	91.1	164.4	161.0	73.0	164.1	112	79	79	78		1.001	5.829	532
895	145.005	148.009		0.16	0.16	1.31	1.09	0.26	91	90	78	1.99	0.00	79	0.015	96	97	188.5	-0.08	0.71	15.4	91.0	164.2	160.8	73.0	164.0	112	78	79	78		1.001	5.921	539
896	145.167	148.174		0.16	0.17	1.31	1.09	0.26	91	90	78	1.99	0.00	79	0.016	93	94	188.5	-0.08	0.69	15.5	90.8	164.0	160.8	73.0	163.8	112	78	79	78		1.001	5.768	524
897	145.329	148.339		0.16	0.16	1.31	1.09	0.26	91	90	78	1.99	0.00	79	0.014	100	100	188.6	-0.02	0.68	15.5	90.7	163.9	160.6	73.0	163.7	111	78	79	78		1.001	5.665	514
898	145.491	148.504		0.16	0.16	1.32	1.09	0.26	91	90	78	1.99	0.00	79	0.016	93	94	188.5	0.07	0.70	15.5	90.4	163.6	160.3	73.1	163.5	111	78	79	78		1.001	5.829	528
899	145.652	148.670		0.16	0.17	1.31	1.09	0.26	91	90	78	2.00	0.00	79	0.014	99	101	188.4	0.07	0.72	15.5	90.4	163.6	160.2	73.0	163.3	111	78	79	78		1.001	5.990	542
900	145.814	148.835		0.16	0.17	1.32	1.09	0.26	91	90	78	2.00	0.00	79	0.015	96	97	188.5	-0.07	0.68	15.5	90.3	163.5	160.2	73.0	163.2	111	79	79	78		1.001	5.667	512
901	145.976	149.001		0.16	0.17	1.32	1.09	0.26	91	90	78	1.99	0.00	79	0.015	96	97	188.3	0.18	0.70	15.4	90.1	163.3	160.0	72.9	163.1	111	79	79	78		1.001	5.829	526
902	146.138	149.166		0.16	0.16	1.32	1.09	0.26	91	90	78	1.99	0.00	79	0.016	93	94	188.4	-0.12	0.68	15.5	90.0	163.2	159.8	72.9	162.9	110	79	79	78		1.001	5.667	511
903	146.300	149.331		0.16	0.16	1.31	1.08	0.26	91	90	78	2.00	0.00	82	0.016	93	94	188.4	0.02	0.74	15.5	89.8	163.0	159.6	72.9	162.8	132	79	79	78		1.001	6.150	553
904	146.461	149.496		0.16	0.17	1.32	1.09	0.26	91	90	78	1.99	0.00	82	0.015	96	97	188.2	0.15	0.71	15.5	89.8	162.9	159.5	72.9	162.7	131	79	79	78		1.001	5.922	532
905	146.623	149.661		0.16	0.16	1.32	1.09	0.26	91	90	78	1.98	0.00	80	0.015	96	97	188.3	-0.02	0.70	15.6	89.6	162.7	159.4	72.9	162.5	126	79	79	78		1.001	5.847	525
906	146.785	149.826		0.16	0.16	1.31	1.09	0.26	91	90	78	1.98	0.00	79	0.015	96	97	188.2	0.10	0.70	15.5	89.4	162.5	159.2	72.9	162.3	132	79	79	78		1.001	5.829	522
907	146.947	149.991		0.16	0.17	1.31	1.09	0.26	91	90	78	2.00	0.00	87	0.014	100	101	188.0	0.11	0.68	15.6	89.2	162.4	159.1	72.9	162.2	148	79	79	78		1.001	5.665	506
908	147.108	150.156		0.16	0.16	1.31	1.09	0.26	91	90	78	1.98	0.00	89	0.015	96	98	187.9	0.12	0.74	15.5	89.1	162.3	159.0	72.9	162.0	159	79	79	78		1.001	6.151	549
909	147.270	150.321		0.16	0.16	1.31	1.09	0.26	91	90	78	1.99	0.00	90	0.015	97	98	187.5	0.38	0.68	15.5	89.0	162.2	158.8	72.9	161.9	167	79	79	78		1.001	5.664	504
910	147.432	150.487		0.16	0.17	1.31	1.09	0.26	91	90	78	1.99	0.00	91	0.014	101	102	187.1	0.44	0.70	15.3	88.8	162.0	158.8	73.0	161.8	175	80	80	78		1.001	5.826	518
911	147.593	150.651		0.16	0.16	1.32	1.09	0.26	91	90	78	1.99	0.00	92	0.016	94	94	186.5	0.58	0.70	15.5	88.9	162.2	158.8	73.0	161.9	183	80	80	78		1.001	5.825	518
912	147.755	150.816		0.16	0.16	1.31	1.09	0.26	91	90	78	2.00	0.00	93	0.015	97	98	186.1	0.44	0.72	15.5	88.9	162.2	158.8	73.0	161.9	189	80	80	78		1.001	5.987	533
913	147.917	150.981		0.16	0.16	1.31	1.09	0.26	91	90	78	1.99	0.00	95	0.013	105	105	185.6	0.49	0.74	15.5	89.0	162.4	159.0	73.1	162.1	196	80	80	78		1.001	6.151	548
914	148.078	151.145		0.16	0.16	1.32	1.09	0.26	91	90	78	2.00	0.00	97	0.016	94	95	185.0	0.60	0.68	15.6	89.2	162.8	159.3	73.1	162.4	203	80	80	78		1.001	5.686	508
915	148.240	151.310		0.16	0.16	1.32	1.09	0.26	91	90	79	2.01	0.00	99	0.014	101	102	184.4	0.62	0.68	15.5	89.7	163.2	159.8	73.2	162.8	210	81	81	79		1.001	5.663	508
916	148.401	151.475		0.16	0.16	1.32	1.09	0.26	91	90	79	2.01	0.00	101	0.016	94	96	183.9	0.45	0.70	15.5	90.4	164.0	160.5	73.2	163.5	215	81	81	79		1.001	5.824	527
917	148.562	151.639		0.16	0.16	1.32	1.09	0.26	91	90	79	2.02	0.00	103	0.015	98	98	183.2	0.69	0.70	15.5	90.9	164.6	161.1	73.2	164.1	221	81	81	79		1.001	5.826	530
918	148.724	151.804		0.16	0.16	1.32	1.09	0.26	91	90	79	2.01	0.00	104	0.015	98	99	182.7	0.56	0.68	15.5	91.6	165.3	161.8	73.2	164.8	226	81	82	79		1.001	5.660	519
919	148.885	151.968		0.16	0.16	1.32	1.08	0.26	91	90	79	2.00	0.00	105	0.015	98	98	182.0	0.71	0.70	15.5	92.4	166.2	162.6	73.3	165.7	229	82	82	79		1.001	5.823	539
920	149.046	152.131		0.16	0.16	1.32	1.08	0.26	91	90	79	2.01	0.00	106	0.014	101	101	181.4	0.57	0.74	15.5	93.3	167.0	163.4	73.3	166.6	233	82	82	79		1.001	6.143	574

Elapsed Time	Particulate Sampling Data																	Fuel Weight, lb		Flow, gpm		Temperature Data, oF													
	Gas Meter Cubic Feet (1)	Gas Meter Cubic Feet (2)	Gas Meter Cubic Feet (amb)	Sample Rate, cfm (1)	Sample Rate, cfm (2)	Orifice dH (1)	Orifice dH (2)	Orifice dH (amb)	Meter oF (1)	Meter oF (2)	Meter oF (amb)	Meter Vac. In. Hg. (1)	Meter Vac. In. Hg. (2)	Dilution Tunnel Temp.	Dilution Tunnel dP	Pro. Rate (%) (1)	Pro. Rate (%) (2)	Scale Reading	Weight Change	Load Side Liquid Flow Rate	Boiler Side Liquid Flow Rate (optional)	Thermopile ΔT	Boiler to Heat Exch. Temp.	Heat Exch to Boiler Temp.	Inlet Load Temp.	Outlet Load Temp.	Stack	Filter (1)	Filter (2)	Ambient		Specific Heat of Inlet Water (BTU/lb-°F)	Mass Flow Rate of Inlet Water (lb/min)	Heat Output, Btu
921	149.207	152.295		0.16	0.16	1.32	1.08	0.26	91	90	79	2.03	0.00	107	0.015	98	99	180.8	0.61	0.68	15.50	94.0	167.8	164.2	73.3	167.4	237	82	82	79		1.001	5.659	533
922	149.368	152.459		0.16	0.16	1.32	1.09	0.26	91	90	79	2.03	0.00	108	0.014	102	102	180.1	0.70	0.66	15.49	94.6	168.5	164.8	73.4	168.0	241	83	83	79		1.001	5.519	523
923	149.529	152.623		0.16	0.16	1.31	1.08	0.26	91	91	79	2.02	0.00	110	0.016	95	96	179.4	0.71	0.72	15.53	95.4	169.3	165.6	73.4	168.8	244	83	83	79		1.001	5.950	568
924	149.690	152.787		0.16	0.16	1.31	1.08	0.26	92	91	79	2.01	0.00	110	0.014	102	102	178.8	0.53	0.69	15.45	96.1	170.0	166.3	73.4	169.6	248	83	83	79		1.001	5.775	556
925	149.851	152.950		0.16	0.16	1.31	1.07	0.26	91	91	79	2.03	0.00	111	0.014	102	102	178.0	0.78	0.68	15.36	97.0	171.0	167.2	73.4	170.4	251	83	84	79		1.001	5.662	550
926	150.012	153.113		0.16	0.16	1.31	1.08	0.26	91	91	79	2.02	0.00	112	0.015	98	98	177.2	0.81	0.70	15.53	97.9	171.9	168.1	73.4	171.3	253	84	84	79		1.001	5.827	571
927	150.173	153.276		0.16	0.16	1.31	1.08	0.26	92	91	79	2.02	0.00	113	0.015	98	98	176.6	0.65	0.72	15.49	98.9	172.8	169.1	73.4	172.4	256	84	84	79		1.001	5.988	593
928	150.333	153.439		0.16	0.16	1.31	1.08	0.26	92	91	79	2.03	0.00	113	0.015	98	98	175.9	0.65	0.70	15.48	99.7	173.7	169.9	73.4	173.2	258	84	84	79		1.001	5.826	582
929	150.493	153.603		0.16	0.16	1.30	1.07	0.26	92	91	79	2.03	0.00	114	0.014	101	103	175.1	0.78	0.66	15.49	100.7	174.7	170.8	73.4	174.1	260	85	85	79		1.001	5.500	554
930	150.654	153.766		0.16	0.16	1.30	1.07	0.26	92	91	79	2.03	0.00	114	0.015	98	98	174.3	0.81	0.72	15.47	101.7	175.6	171.7	73.4	175.1	262	85	85	79		1.001	5.966	607
931	150.815	153.928		0.16	0.16	1.30	1.07	0.26	92	91	79	2.03	0.00	115	0.015	99	98	173.4	0.98	0.68	15.53	102.6	176.6	172.9	73.5	176.0	264	85	85	79		1.001	5.660	581
932	150.975	154.091		0.16	0.16	1.30	1.07	0.26	92	91	79	2.05	0.00	116	0.014	101	102	172.9	0.48	0.72	15.47	103.6	177.5	173.6	73.4	177.0	266	85	85	79		1.001	5.987	621
933	151.135	154.253		0.16	0.16	1.30	1.07	0.26	92	91	79	2.03	0.00	116	0.015	98	98	172.1	0.73	0.64	15.51	104.5	178.5	174.8	73.4	177.9	268	85	86	79		1.001	5.337	558
934	151.295	154.417		0.16	0.16	1.30	1.07	0.26	92	91	79	2.04	0.00	117	0.015	98	99	171.5	0.69	0.64	15.52	105.3	179.4	175.6	73.5	178.8	270	86	86	79		1.001	5.340	563
935	151.455	154.579		0.16	0.16	1.30	1.06	0.26	92	91	79	2.04	0.00	117	0.015	98	98	170.7	0.72	0.66	15.47	106.5	180.6	176.8	73.4	180.0	271	86	86	79		1.001	5.498	587
936	151.615	154.741		0.16	0.16	1.30	1.06	0.26	92	91	79	2.04	0.00	118	0.015	98	98	169.9	0.85	0.68	15.33	107.4	181.5	177.6	73.5	180.9	273	86	86	79		1.001	5.663	609
937	151.775	154.903		0.16	0.16	1.30	1.06	0.26	92	91	79	2.05	0.00	119	0.015	98	98	169.1	0.76	0.64	15.49	108.5	182.6	178.9	73.5	182.0	274	86	86	79		1.001	5.336	580
938	151.936	155.066		0.16	0.16	1.30	1.06	0.26	92	91	79	2.03	0.00	103	0.014	101	101	168.8	0.37	0.64	15.50	109.6	183.6	179.9	73.5	183.1	251	85	85	79		1.001	5.337	585
939	152.096	155.229		0.16	0.16	1.30	1.06	0.26	92	91	79	2.03	0.00	95	0.013	103	104	168.5	0.27	0.64	15.45	110.2	184.2	180.5	73.5	183.8	236	85	85	79		1.001	5.316	587
940	152.257	155.391		0.16	0.16	1.30	1.06	0.26	92	91	79	2.02	0.00	91	0.016	93	93	168.2	0.28	0.62	15.40	110.6	184.6	180.8	73.5	184.2	228	84	85	79		1.001	5.187	575
941	152.419	155.555		0.16	0.16	1.30	1.07	0.26	92	91	79	2.03	0.00	89	0.016	94	94	168.0	0.19	0.63	15.51	110.9	184.8	181.0	73.5	184.4	221	84	84	79		1.001	5.207	578
942	152.579	155.719		0.16	0.16	1.30	1.07	0.26	92	91	79	2.02	0.00	88	0.014	99	100	167.9	0.13	0.64	15.48	111.1	185.0	181.2	73.6	184.6	214	84	84	79		1.001	5.337	593
943	152.740	155.883		0.16	0.16	1.30	1.06	0.26	92	91	79	2.02	0.00	87	0.014	100	100	167.8	0.12	0.66	15.45	111.1	185.1	181.3	73.6	184.7	209	84	84	79		1.001	5.496	611
944	152.901	156.046		0.16	0.16	1.30	1.07	0.26	92	91	79	2.02	0.00	86	0.016	93	93	167.6	0.16	0.62	15.46	111.1	185.0	181.5	73.6	184.7	205	84	84	79		1.001	5.175	576
945	153.062	156.210		0.16	0.16	1.30	1.06	0.26	92	91	79	2.01	0.00	86	0.014	99	100	167.6	0.03	0.62	15.45	111.2	185.2	181.4	73.6	184.8	202	83	84	79		1.001	5.173	576
946	153.223	156.373		0.16	0.16	1.30	1.06	0.26	92	91	79	2.01	0.00	85	0.014	99	99	167.6	-0.05	0.64	15.42	111.2	185.2	181.4	73.6	184.9	199	83	84	79		1.001	5.335	594
947	153.384	156.537		0.16	0.16	1.30	1.07	0.26	92	91	79	2.02	0.00	84	0.014	99	100	167.5	0.10	0.66	15.31	111.3	185.3	181.6	73.6	184.9	197	83	83	79		1.001	5.496	612
948	153.545	156.700		0.16	0.16	1.29	1.07	0.26	92	91	79	2.01	0.00	83	0.015	96	96	167.5	0.08	0.66	15.54	111.4	185.3	181.6	73.6	185.0	195	83	83	79		1.001	5.497	613
949	153.706	156.865		0.16	0.17	1.29	1.07	0.26	92	91	79	2.01	0.00	83	0.016	93	94	167.7	-0.23	0.62	15.34	111.4	185.4	181.6	73.6	185.0	193	83	83	79		1.001	5.174	577
950	153.867	157.028		0.16	0.16	1.29	1.07	0.26	92	91	79	2.01	0.00	83	0.014	99	99	167.6	0.08	0.60	15.47	111.4	185.4	181.6	73.7	185.1	191	83	83	79		1.001	4.976	555
951	154.029	157.192		0.16	0.16	1.29	1.07	0.26	92	91	79	2.01	0.00	83	0.014	100	100	167.4	0.24	0.60	15.43	111.4	185.4	181.7	73.7	185.1	189	83	83	79		1.001	5.014	559
952	154.190	157.355		0.16	0.16	1.29	1.07	0.26	92	91	79	2.01	0.00	82	0.015	96	96	167.5	-0.14	0.58	15.45	111.4	185.4	181.7	73.7	185.1	186	83	83	79		1.001	4.850	541
953	154.351	157.519		0.16	0.16	1.29	1.07	0.26	92	91	79	2.01	0.00	82	0.015	96	96	167.3	0.20	0.62	15.46	111.2	185.3	181.7	73.8	185.0	184	82	83	79		1.001	5.174	576
954	154.511	157.683		0.16	0.16	1.30	1.07	0.26	92	91	79	2.02	0.00	82	0.016	92	93	167.5	-0.21	0.62	15.51	111.3	185.3	181.8	73.7	185.0	182	82	82	79		1.001	5.174	577
955	154.672	157.847		0.16	0.16	1.29	1.07	0.26	92	91	80	2.02	0.00	82	0.017	90	90	167.5	0.00	0.62	15.44	111.2	185.3	181.7	73.8	185.0	180	82	82	80		1.001	5.173	576
956	154.834	158.011		0.16	0.16	1.30	1.07	0.26	92	91	80	2.02	0.00	82	0.016	93	93	167.5	-0.01	0.60	15.42	111.2	185.3	181.7	73.8	184.9	178	82	82	80		1.001	5.011	558
957	154.994	158.174		0.16	0.16	1.30	1.07	0.26	92	91	79	2.02	0.00	82	0.015	95	96	167.4	0.16	0.66	15.55	111.1	185.2	181.6	73.8	184.9	176	82	82	79		1.001	5.497	611
958	155.155	158.338		0.16	0.16	1.29	1.07	0.26	92	91	80	2.02	0.00	82	0.016	93	93	167.4	-0.07	0.62	15.50	111.1	185.2	181.6	73.8	184.9	174	82	82	80		1.001	5.176	576
959	155.316	158.502		0.16	0.16	1.30	1.07	0.26	92	91	80	2.01	0.00	82	0.015	96	96	167.4	-0.01	0.62	15.49	111.0	185.1	181.5	73.9	184.8	172	82	82	80		1.001	5.172	575
960	155.478	158.666		0.16	0.16	1.29	1.07	0.26	92	91	80	2.02	0.00	82	0.016	93	93	167.4	0.08	0.60	15.48	111.0	185.1	181.6	73.9	184.8	170	82	82	80		1.001	5.010	557
961	155.639	158.830		0.16	0.16	1.29	1.07	0.26	92	91	80	2.02	0.00	82	0.014	99	100	167.3	0.03	0.58	15.50	110.9	185.1	181.5	73.9	184.8	168	82	82	80		1.001	4.849	538
962	155.800	158.994		0.16	0.16	1.29	1.06	0.26	92	91	80	2.02	0.00	82	0.014	99	100	167.3	-0.01	0.66	15.47	110.9	185.1	181.5	73.9	184.8	167	82	82	80		1.001	5.496	610
963	155.961	159.157		0.16	0.16	1.29	1.07	0.26	92	91	80	2.01	0.00	82	0.015	96	96	167.3	0.07	0.60	15.55	110.8	185.0	181.4	73.9	184.7	165	82	82	80		1.001	5.010	556
964	156.122	159.321		0.16	0.16	1.29	1.07	0.26	92	91	80	2.01	0.00	82	0.014	99	100	167.3	-0.04	0.62	15.50	110.8	185.0	181.4	73.9	184.7	163	81	82	80		1.001	5.172	574
965	156.282	159.485		0.16	0.16	1.29	1.07	0.26	92	91	80	2.01	0.00	82	0.015	95	96	167.5	-0.18	0.60	15.40	110.7	184.9	181.4	73.9	184.6	162	81	82	80		1.001	5.007	555
966	156.443	159.648		0.16	0.16	1.30	1.06	0.26	92	91	80	2.03	0.00	82	0.015	96	96	167.4	0.13	0.62	15.57	110.6	184.9	181.5	73.9	184.5	160	81	82	80		1.001	5.182	574
967	156.604	159.813		0.16	0.16	1.30	1.07	0.26	92	91	80	2.02	0.00	82	0.014	99	100	167.2	0.14	0.62	15.48	110.6	184.8	181.2	73.9	184.5	159	81	81	80		1.001	5.177	573
968	156.766	159.976		0.16	0.16	1.30	1.06	0.26	92	91	80	2.03	0.00	82	0.014	100	99	167.4	-0.16	0.65	15.53	110.5	184.8	181.2	74.0	184.5	157	81	81	80		1.001	5.421	600
969	156.926	160.140		0.16	0.16	1.30	1.07	0.26	92	91	80	2.02	0.00	82	0.015	95	96	167.5	-0.12	0.62	15.53	110.4	184.7	181.2	74.0	184.4	156	81	81	80		1.001	5.178	572
970	157.088	160.303		0.16	0.16	1.30	1.07	0.26	92	91	80	2.02	0.00	82	0.015	96	96	167.4	0.07	0.64	15.52	110.3	184.6	181.1	74.0	184.3	155	81	81	80		1.001	5.331	589
971	157.249	160.467		0.16	0.16	1.30	1.07	0.26	92	91	80	2.01	0.00	82	0.015	96	96	167.5	-0.10	0.58	15.50	110.2	184.6	181.3	74.1	184.3	153	81	81	80		1.001	4.847	535
972	157.410	160.631		0.16	0.16	1.30	1.07	0.26	92	92	80	2.01	0.00	82	0.014	99	99	167.4	0.15	0.58	15.50	110.1	184.5	181.0	74.1	184.2	152	81	81	80		1.001	4.847	534
973	157.571	160.796		0.16	0.16	1.29	1.07	0.26	92	92	80	2.03	0.00	82	0.016	93	94	167.4	-0.05	0.62	15.48	110.0	184.4	180.7	74.1	184.1	151	81	81	80		1.001	5.170	569
974	157.732	160.959		0.16	0.16	1.29	1.07	0.26	92	92	80	2.01	0.00	82	0.015	96	95	167.4	0.07	0.66	15.34	109.9	184.3	180.3	74.2	184.0	150	81	81	80		1.001	5.497	605
975	157.893	161.122		0.16	0.16	1.30	1.07	0.26	92	92	80	2.02	0.00	82	0.015	96	95	167.3	0.09	0.66	15.42	109.7	184.3	180.4	74.2	184.0	149	81	81	80		1.001	5.492	603
976	158.054	161.286		0.16	0.16	1.29	1.07	0.26	92	92	80	2.02	0.00	82	0.014	99	99	167.4	-0.11	0.72	15.54	109.6	184.2	180.1	74.2	183.9	149	81	81	80		1.001	5.946	653
977	158.215	161.450		0.16	0.16	1.29	1.07	0.26	92	92	80	2.02	0.00	82	0.016	93	93	167.4	-0.01	0.66	15.47	109.5	184.1	180.1	74.2	183.8	148	81	81	80		1.001	5.493	602
978	158.376	161.614		0.16	0.16	1.30	1.07	0.26	92	92	80	2.01	0.00	82	0.015	96	96	167.5	-0.11	0.68	15.52	109.4	184.0	180.0	74.3	183.7	147	81	81	80		1.001	5.655	619
979	158.537	161.778		0.16	0.16	1.30	1.07	0.26	93	92	80	2.02	0.00	82	0.014	99	99	167.3	0.25	0.66	15.49	109.3	183.9	179.9	74.3	183.6	146	81	81	80		1.001	5.493	601
980	158.698	161.941		0.16	0.16	1.30	1.06	0.26	93	92	80	2.02	0.00	82	0.015	96	95	167.4	-0.16	0.68	15.44	109.2	183.8	179.8	74.3	183.5	145	81	81	80		1.001	5.656	618
981	158.859	162.105		0.16	0.16	1.30	1.07	0.26	93	92	80	2.01	0.00	82	0.015	96	96	167.6	-0.14	0.66	15.39	109.1	183.7	179.8	74.3	183.4	144	81	81	80		1.001	5.493	600
982	159.020	162.268		0.16	0.16	1.30	1.07	0.26	93	92	80	2.01	0.00	82	0.015	96	95	167.5	0.12	0.68	15.52	109.0	183.6	179.6	74.3	183.3	144	81	81	80		1.001	5.654	617

Elapsed Time	Particulate Sampling Data																	Fuel Weight, lb		Flow, gpm		Temperature Data, oF													
	Gas Meter Cubic Feet (1)	Gas Meter Cubic Feet (2)	Gas Meter Cubic Feet (amb)	Sample Rate, cfm (1)	Sample Rate, cfm (2)	Orifice dH (1)	Orifice dH (2)	Orifice dH (amb)	Meter oF (1)	Meter oF (2)	Meter oF (amb)	Meter Vac. In. Hg. (1)	Meter Vac. In. Hg. (2)	Dilution Tunnel Temp.	Dilution Tunnel dP	Pro. Rate (%) (1)	Pro. Rate (%) (2)	Scale Reading	Weight Change	Load Side Liquid Flow Rate	Boiler Side Liquid Flow Rate (optional)	Thermopile ΔT	Boiler to Heat Exch. Temp.	Heat Exch to Boiler Temp.	Inlet Load Temp.	Outlet Load Temp.	Stack	Filter (1)	Filter (2)	Ambient		Specific Heat of Inlet Water (BTU/lb-°F)	Mass Flow Rate of Inlet Water (lb/min)	Heat Output, Btu
983	159.181	162.432		0.16	0.16	1.30	1.07	0.26	93	92	80	2.01	0.00	82	0.014	99	99	167.5	-0.08	0.68	15.50	108.8	183.5	179.6	74.4	183.2	143	81	81	80		1.001	5.655	616
984	159.343	162.597		0.16	0.17	1.30	1.07	0.26	93	92	80	2.01	0.00	82	0.015	96	97	167.5	-0.01	0.66	15.45	108.7	183.4	179.4	74.4	183.1	142	81	81	80		1.001	5.491	597
985	159.504	162.760		0.16	0.16	1.30	1.07	0.26	93	92	80	2.02	0.00	82	0.015	96	95	167.5	0.06	0.69	15.47	108.6	183.3	179.2	74.4	183.0	141	81	81	80		1.001	5.776	628
986	159.665	162.924		0.16	0.16	1.30	1.06	0.26	93	92	80	2.00	0.00	82	0.014	99	99	167.5	-0.04	0.66	15.41	108.5	183.1	179.2	74.4	182.9	140	81	81	80		1.001	5.493	597
987	159.826	163.087		0.16	0.16	1.30	1.07	0.26	93	92	80	2.03	0.00	82	0.016	92	92	167.5	0.00	0.70	15.46	108.4	183.0	179.1	74.4	182.8	140	81	81	80		1.001	5.817	631
988	159.987	163.251		0.16	0.16	1.30	1.07	0.26	93	92	80	2.02	0.00	82	0.014	99	99	167.3	0.21	0.66	15.48	108.2	182.9	178.9	74.4	182.6	139	81	81	80		1.001	5.492	595
989	160.148	163.415		0.16	0.16	1.30	1.07	0.26	93	92	81	2.02	0.00	82	0.016	92	93	167.4	-0.09	0.70	15.50	108.1	182.8	178.9	74.4	182.5	139	81	81	81		1.001	5.816	630
990	160.309	163.579		0.16	0.16	1.30	1.07	0.26	93	92	81	2.02	0.00	82	0.014	99	99	167.5	-0.04	0.68	15.50	108.0	182.7	178.7	74.3	182.4	138	81	81	81		1.001	5.655	612
991	160.471	163.743		0.16	0.16	1.30	1.07	0.26	93	92	81	2.02	0.00	82	0.013	103	103	167.3	0.18	0.66	15.45	107.9	182.6	178.8	74.3	182.2	137	81	81	81		1.001	5.492	593
992	160.632	163.906		0.16	0.16	1.30	1.06	0.26	93	92	81	2.02	0.00	82	0.016	92	92	167.3	-0.07	0.64	15.44	107.7	182.4	178.4	74.3	182.1	137	81	81	81		1.001	5.332	575
993	160.793	164.070		0.16	0.16	1.30	1.07	0.26	93	92	81	2.03	0.00	82	0.016	92	93	167.4	-0.11	0.68	15.46	107.7	182.3	178.4	74.3	182.0	137	81	81	81		1.001	5.649	609
994	160.954	164.234		0.16	0.16	1.30	1.07	0.26	93	92	81	2.01	0.00	82	0.015	96	96	167.5	-0.01	0.68	15.51	107.5	182.2	178.3	74.3	181.9	136	81	81	81		1.001	5.652	609
995	161.116	164.398		0.16	0.16	1.30	1.07	0.26	93	92	81	2.01	0.00	82	0.015	96	96	167.5	0.00	0.70	15.49	107.4	182.0	178.1	74.3	181.7	135	81	81	81		1.001	5.835	627
996	161.277	164.562		0.16	0.16	1.30	1.07	0.26	93	92	81	2.02	0.00	82	0.013	103	103	167.4	0.04	0.72	15.56	107.3	181.9	178.0	74.3	181.6	135	81	81	81		1.001	5.964	641
997	161.438	164.726		0.16	0.16	1.29	1.07	0.26	93	92	81	2.02	0.00	82	0.016	92	93	167.5	-0.05	0.72	15.47	107.1	181.8	177.9	74.4	181.5	134	81	81	81		1.001	5.981	641
998	161.600	164.889		0.16	0.16	1.29	1.07	0.26	93	92	81	2.01	0.00	82	0.015	96	95	167.4	0.02	0.70	15.49	107.1	181.7	177.8	74.3	181.4	134	81	81	81		1.001	5.815	623
999	161.761	165.053		0.16	0.16	1.30	1.07	0.26	93	92	81	2.02	0.00	82	0.016	92	93	167.5	-0.05	0.72	15.42	106.9	181.6	177.7	74.3	181.3	133	81	81	81		1.001	5.978	640
1000	161.922	165.217		0.16	0.16	1.30	1.07	0.26	93	92	81	2.01	0.00	82	0.015	96	96	167.6	-0.07	0.68	15.44	106.8	181.4	177.5	74.4	181.2	133	81	81	81		1.001	5.654	604
1001	162.083	165.380		0.16	0.16	1.30	1.07	0.26	93	92	81	2.02	0.00	82	0.013	103	103	167.4	0.18	0.62	15.40	106.6	181.3	177.6	74.3	180.9	133	81	81	81		1.001	5.168	552
1002	162.244	165.545		0.16	0.16	1.30	1.07	0.26	93	92	81	2.02	0.00	82	0.013	103	104	167.6	-0.19	0.68	15.55	106.5	181.2	177.2	74.4	180.9	132	81	81	81		1.001	5.652	603
1003	162.405	165.709		0.16	0.16	1.30	1.07	0.26	93	92	81	2.01	0.00	82	0.015	96	96	167.3	0.26	0.64	15.47	106.3	181.0	177.1	74.4	180.7	132	81	81	81		1.001	5.330	567
1004	162.567	165.872		0.16	0.16	1.30	1.07	0.26	93	92	81	2.01	0.00	82	0.016	93	92	167.5	-0.23	0.67	15.40	106.2	180.9	177.0	74.4	180.6	131	81	81	81		1.001	5.579	593
1005	162.728	166.036		0.16	0.16	1.30	1.07	0.26	93	92	81	2.02	0.00	82	0.016	92	93	167.4	0.12	0.64	15.44	106.1	180.8	176.9	74.4	180.5	130	81	81	81		1.001	5.332	566
1006	162.889	166.200		0.16	0.16	1.29	1.07	0.26	93	92	81	2.02	0.00	82	0.015	96	96	167.5	-0.03	0.66	15.37	105.9	180.6	176.7	74.4	180.3	130	81	81	81		1.001	5.493	582
1007	163.050	166.363		0.16	0.16	1.29	1.06	0.26	93	92	81	2.03	0.00	91	0.014	100	100	167.3	0.17	0.70	15.44	105.8	180.5	176.6	74.4	180.2	157	82	82	81		1.001	5.813	616
1008	163.211	166.527		0.16	0.16	1.29	1.07	0.26	93	92	81	2.02	0.00	86	0.014	99	100	166.9	0.35	0.68	15.42	105.5	180.3	176.5	74.5	180.0	153	81	81	81		1.001	5.651	597
1009	163.372	166.691		0.16	0.16	1.30	1.07	0.26	93	92	81	2.01	0.00	83	0.015	96	96	167.1	-0.13	0.68	15.49	105.4	180.2	176.3	74.5	179.9	147	81	81	81		1.001	5.652	596
1010	163.534	166.855		0.16	0.16	1.30	1.08	0.26	93	93	81	2.01	0.00	83	0.014	100	99	167.0	0.09	0.70	15.52	105.2	180.1	176.2	74.5	179.7	144	82	82	81		1.001	5.815	613
1011	163.695	167.019		0.16	0.16	1.30	1.07	0.26	93	93	81	1.99	0.00	82	0.015	96	96	166.9	0.06	0.70	15.37	105.0	179.9	176.1	74.6	179.6	141	82	82	81		1.001	5.815	612
1012	163.856	167.184		0.16	0.16	1.30	1.08	0.26	93	93	81	2.00	0.00	82	0.016	92	93	167.0	-0.04	0.66	15.55	104.9	179.8	176.0	74.6	179.5	139	82	82	81		1.001	5.490	577
1013	164.018	167.348		0.16	0.16	1.30	1.08	0.26	93	93	81	2.02	0.00	82	0.013	103	103	167.2	-0.21	0.68	15.49	104.7	179.6	175.7	74.6	179.3	137	82	82	81		1.001	5.630	590
1014	164.180	167.513		0.16	0.16	1.29	1.08	0.26	93	93	81	2.01	0.00	82	0.014	99	100	167.1	0.12	0.71	15.47	104.6	179.5	175.7	74.6	179.2	135	82	82	81		1.001	5.927	621
1015	164.341	167.678		0.16	0.16	1.29	1.08	0.26	93	93	81	2.00	0.00	82	0.014	99	100	166.9	0.16	0.64	15.52	104.5	179.4	175.6	74.6	179.1	134	82	82	81		1.001	5.330	557
1016	164.502	167.842		0.16	0.16	1.29	1.07	0.26	93	93	81	2.00	0.00	82	0.016	92	93	167.1	-0.18	0.64	15.57	104.4	179.3	175.4	74.5	179.0	132	82	82	81		1.001	5.326	557
1017	164.664	168.006		0.16	0.16	1.30	1.07	0.26	93	93	81	2.01	0.00	82	0.015	96	96	166.9	0.18	0.70	15.50	104.3	179.1	175.2	74.5	178.8	131	82	82	81		1.001	5.817	607
1018	164.825	168.171		0.16	0.16	1.30	1.08	0.26	93	93	81	2.01	0.00	82	0.015	96	96	167.1	-0.22	0.68	15.48	104.3	179.0	175.2	74.4	178.7	131	82	82	81		1.001	5.652	590
1019	164.987	168.335		0.16	0.16	1.30	1.08	0.26	93	93	81	2.01	0.00	82	0.015	96	96	166.9	0.20	0.72	15.52	104.1	178.8	175.0	74.4	178.5	130	82	82	81		1.001	5.976	623
1020	165.148	168.499		0.16	0.16	1.29	1.08	0.26	93	93	81	2.01	0.00	82	0.015	96	96	167.1	-0.19	0.66	15.61	104.1	178.7	174.9	74.3	178.4	129	82	82	81		1.001	5.490	572
1021	165.310	168.664		0.16	0.16	1.29	1.07	0.26	93	93	81	2.01	0.00	82	0.014	99	100	166.9	0.22	0.70	15.46	103.9	178.6	174.8	74.3	178.3	129	82	82	81		1.001	5.810	605
1022	165.471	168.829		0.16	0.17	1.29	1.08	0.26	93	93	81	2.00	0.00	82	0.014	99	100	167.0	-0.09	0.70	15.47	103.8	178.4	174.6	74.3	178.1	128	82	82	81		1.001	5.808	604
1023	165.633	168.993		0.16	0.16	1.33	1.07	0.26	94	93	81	2.03	0.00	82	0.013	103	103	167.0	-0.08	0.69	15.50	103.7	178.2	174.5	74.3	178.0	127	82	82	81		1.001	5.753	597
1024	165.796	169.157		0.16	0.16	1.33	1.07	0.26	94	93	81	2.02	0.00	83	0.014	100	99	167.1	-0.02	0.66	15.49	103.5	178.1	174.4	74.3	177.8	127	82	82	81		1.001	5.490	569
1025	165.960	169.322		0.16	0.16	1.32	1.07	0.26	94	93	81	2.02	0.00	82	0.016	94	93	167.1	-0.02	0.64	15.52	103.3	178.0	174.4	74.4	177.7	126	82	82	81		1.001	5.328	551
1026	166.123	169.486		0.16	0.16	1.33	1.08	0.26	94	93	82	2.02	0.00	82	0.015	97	96	166.9	0.14	0.62	15.46	103.2	177.9	174.2	74.4	177.6	126	82	82	82		1.001	5.168	534
1027	166.286	169.651		0.16	0.17	1.33	1.07	0.26	94	93	81	2.02	0.00	82	0.015	97	96	166.9	0.02	0.68	15.50	103.0	177.7	174.2	74.4	177.4	126	82	82	81		1.001	5.654	583
1028	166.448	169.816		0.16	0.16	1.33	1.07	0.26	94	93	81	2.04	0.00	83	0.016	93	93	167.0	-0.04	0.68	15.47	102.8	177.6	174.1	74.5	177.3	125	82	82	81		1.001	5.653	582
1029	166.611	169.980		0.16	0.16	1.33	1.08	0.26	94	93	82	2.03	0.00	83	0.015	97	96	167.1	-0.17	0.62	15.48	102.6	177.4	173.8	74.5	177.1	124	82	82	82		1.001	5.165	531
1030	166.775	170.145		0.16	0.17	1.33	1.07	0.26	94	93	82	2.02	0.00	82	0.015	97	96	166.9	0.19	0.66	15.47	102.5	177.3	173.8	74.6	177.0	124	82	82	82		1.001	5.492	563
1031	166.938	170.309		0.16	0.16	1.33	1.07	0.26	94	93	82	2.04	0.00	83	0.016	94	93	167.1	-0.18	0.67	15.51	102.3	177.1	173.5	74.6	176.9	123	82	82	82		1.001	5.576	571
1032	167.101	170.473		0.16	0.16	1.32	1.08	0.26	94	93	82	2.03	0.00	82	0.015	97	96	167.0	0.12	0.69	15.50	102.1	177.0	173.3	74.6	176.8	124	82	82	82		1.001	5.697	582
1033	167.265	170.637		0.16	0.16	1.33	1.08	0.26	94	93	82	2.02	0.00	82	0.014	101	99	167.0	-0.03	0.71	15.49	102.0	176.9	173.4	74.6	176.6	123	82	82	82		1.001	5.879	600
1034	167.428	170.802		0.16	0.16	1.33	1.08	0.26	94	93	82	2.03	0.00	83	0.013	104	104	166.9	0.10	0.60	15.54	101.8	176.7	173.0	74.7	176.4	123	82	82	82		1.001	5.004	510
1035	167.591	170.967		0.16	0.17	1.32	1.08	0.26	94	93	82	2.04	0.00	83	0.015	97	97	167.0	-0.10	0.66	15.47	101.6	176.6	172.9	74.7	176.3	123	82	82	82		1.001	5.487	558
1036	167.755	171.132		0.16	0.16	1.32	1.07	0.26	94	93	82	2.02	0.00	83	0.015	97	97	167.1	-0.06	0.60	15.49	101.4	176.4	172.9	74.8	176.2	123	82	82	82		1.001	5.003	508
1037	167.918	171.296		0.16	0.16	1.33	1.07	0.26	94	93	82	2.02	0.00	83	0.015	97	96	167.1	-0.02	0.60	15.42	101.2	176.3	172.6	74.8	176.0	122	82	82	82		1.001	5.002	507
1038	168.081	171.460		0.16	0.16	1.32	1.06	0.26	94	93	82	2.05	0.00	90	0.015	97	97	166.9	0.22	0.60	15.52	101.0	176.1	172.7	74.9	175.9	147	83	83	82		1.001	5.005	506
1039	168.245	171.624		0.16	0.16	1.33	1.07	0.26	94	93	82	2.03	0.00	85	0.015	97	96	166.9	0.00	0.68	15.53	100.8	176.0	172.4	74.9	175.7	142	82	82	82		1.001	5.644	570
1040	168.408	171.788		0.16	0.16	1.33	1.08	0.26	94	93	82	2.04	0.00	83	0.015	97	96	166.7	0.19	0.64	15.53	100.5	175.8	172.1	75.0	175.5	138	82	82	82		1.001	5.327	536
1041	168.570	171.953		0.16	0.16	1.33	1.08	0.26	94	93	82	2.02	0.00	83	0.014	99	100	166.9	-0.20	0.67	15.47	100.4	175.7	172.0	75.0	175.4	135	82	82	82		1.001	5.596	563
1042	168.733	172.118		0.16	0.16	1.33	1.08	0.26	94	93	82	2.04	0.00	83	0.015	97	97	166.9	0.04	0.66	15.43	100.3	175.5	171.8	74.9	175.2	132	82	82	82		1.001	5.487	551
1043	168.897	172.283		0.16	0.16	1.33	1.08	0.26	94	93	82	2.03	0.00	83	0.015	97	97	166.8	0.03	0.74	15.50	100.2	175.4	171.7	74.9	175.1	130	82	82	82		1.001	6.135	616
1044	169.060	172.447		0.16	0.16	1.32	1.07	0.26	94	93	82	2.04	0.00	83	0.013	104	103	166.7	0.18	0.68	15.50	100.3	175.2	171.8	74.7	174.9	129	82	82	82		1.001	5.650	567

Elapsed Time	Particulate Sampling Data																	Fuel Weight, lb		Flow, gpm		Temperature Data, oF													
	Gas Meter Cubic Feet (1)	Gas Meter Cubic Feet (2)	Gas Meter Cubic Feet (amb)	Sample Rate, cfm (1)	Sample Rate, cfm (2)	Orifice dH (1)	Orifice dH (2)	Orifice dH (amb)	Meter oF (1)	Meter oF (2)	Meter oF (amb)	Meter Vac. In. Hg. (1)	Meter Vac. In. Hg. (2)	Dilution Tunnel Temp.	Dilution Tunnel dP	Pro. Rate (%) (1)	Pro. Rate (%) (2)	Scale Reading	Weight Change	Load Side Liquid Flow Rate	Boiler Side Liquid Flow Rate (optional)	Thermopile ΔT	Boiler to Heat Exch. Temp.	Heat Exch to Boiler Temp.	Inlet Load Temp.	Outlet Load Temp.	Stack	Filter (1)	Filter (2)	Ambient		Specific Heat of Inlet Water (BTU/lb-°F)	Mass Flow Rate of Inlet Water (lb/min)	Heat Output, Btu
1045	169.223	172.611		0.16	0.16	1.33	1.08	0.26	94	93	82	2.03	0.00	83	0.015	97	96	166.7	-0.04	0.68	15.47	100.2	175.1	171.4	74.6	174.8	128	82	82	82		1.001	5.651	567
1046	169.387	172.775		0.16	0.16	1.33	1.07	0.26	94	93	82	2.02	0.00	83	0.014	101	99	166.7	-0.03	0.68	15.47	100.3	174.9	171.2	74.4	174.7	127	82	82	82		1.001	5.651	567
1047	169.550	172.940		0.16	0.16	1.32	1.08	0.26	94	93	82	2.02	0.00	83	0.015	97	97	166.8	-0.04	0.70	15.57	100.4	174.8	171.1	74.2	174.6	126	82	82	82		1.001	5.815	584
1048	169.713	173.104		0.16	0.16	1.33	1.08	0.26	94	93	82	2.03	0.00	83	0.014	100	99	166.7	0.05	0.70	15.45	100.3	174.7	171.0	74.2	174.5	126	82	82	82		1.001	5.812	584
1049	169.877	173.269		0.16	0.16	1.32	1.08	0.26	94	93	82	2.04	0.00	83	0.015	97	97	166.8	-0.09	0.72	15.50	100.2	174.5	171.0	74.0	174.3	125	82	82	82		1.001	5.975	600
1050	170.040	173.434		0.16	0.16	1.32	1.07	0.26	94	93	82	2.04	0.00	83	0.015	97	97	166.8	-0.02	0.73	15.44	100.2	174.4	170.7	74.0	174.1	125	82	82	82		1.001	6.043	606
1051	170.203	173.598		0.16	0.16	1.32	1.07	0.26	94	93	82	2.04	0.00	83	0.016	94	93	166.8	0.05	0.68	15.52	100.0	174.2	170.5	74.0	173.9	124	82	82	82		1.001	5.649	565
1052	170.367	173.763		0.16	0.16	1.33	1.07	0.26	94	93	82	2.02	0.00	83	0.014	101	100	166.7	0.09	0.68	15.40	99.9	174.1	170.5	74.0	173.9	123	82	82	82		1.001	5.649	565
1053	170.530	173.927		0.16	0.16	1.33	1.07	0.26	94	93	82	2.04	0.00	83	0.015	97	96	166.7	0.03	0.72	15.48	99.7	174.0	170.3	74.0	173.7	122	82	82	82		1.001	5.975	596
1054	170.693	174.091		0.16	0.16	1.33	1.08	0.26	94	94	82	2.04	0.00	83	0.013	104	103	166.7	-0.08	0.70	15.56	99.5	173.8	170.1	74.0	173.5	122	82	82	82		1.001	5.810	579
1055	170.856	174.256		0.16	0.16	1.33	1.08	0.26	94	94	82	2.03	0.00	83	0.015	97	96	166.5	0.26	0.64	15.58	99.3	173.6	170.0	74.1	173.4	122	82	82	82		1.001	5.327	530
1056	171.019	174.421		0.16	0.16	1.33	1.08	0.26	94	94	82	2.03	0.00	83	0.014	100	100	166.8	-0.31	0.68	15.43	99.1	173.5	169.8	74.1	173.2	122	82	82	82		1.001	5.650	561
1057	171.182	174.586		0.16	0.17	1.33	1.07	0.26	94	94	82	2.02	0.00	83	0.012	108	108	166.7	0.06	0.70	15.52	99.0	173.3	169.6	74.1	173.1	122	82	82	82		1.001	5.813	576
1058	171.346	174.750		0.16	0.16	1.33	1.08	0.26	94	94	82	2.02	0.00	83	0.013	104	103	166.9	-0.16	0.64	15.38	98.8	173.2	169.5	74.1	173.0	122	82	82	82		1.001	5.329	527
1059	171.509	174.914		0.16	0.16	1.33	1.07	0.26	94	94	82	2.03	0.00	83	0.014	100	99	166.7	0.19	0.66	15.50	98.7	173.1	169.4	74.1	172.8	121	82	82	82		1.001	5.495	543
1060	171.672	175.078		0.16	0.16	1.32	1.07	0.26	94	94	82	2.03	0.00	83	0.015	97	96	166.8	-0.09	0.70	15.40	98.5	172.9	169.4	74.2	172.7	121	82	82	82		1.001	5.800	572
1061	171.835	175.243		0.16	0.16	1.32	1.08	0.26	94	94	82	2.04	0.00	83	0.014	100	100	167.0	-0.17	0.76	15.47	98.3	172.7	169.0	74.1	172.5	120	82	82	82		1.001	6.301	620
1062	171.999	175.407		0.16	0.16	1.32	1.07	0.26	94	94	82	2.03	0.00	83	0.014	101	99	166.7	0.30	0.66	15.50	98.2	172.6	168.9	74.2	172.4	120	82	82	82		1.001	5.490	539
1063	172.162	175.572		0.16	0.16	1.32	1.08	0.26	94	94	82	2.03	0.00	83	0.014	100	100	166.7	0.00	0.70	15.49	98.0	172.5	168.8	74.2	172.2	120	83	83	82		1.001	5.814	570
1064	172.325	175.737		0.16	0.16	1.32	1.07	0.26	94	94	82	2.04	0.00	83	0.014	100	100	166.7	-0.07	0.68	15.46	97.8	172.3	168.7	74.3	172.1	119	83	83	82		1.001	5.649	553
1065	172.489	175.901		0.16	0.16	1.32	1.08	0.26	94	94	82	2.03	0.00	83	0.015	97	96	166.9	-0.19	0.72	15.45	97.7	172.2	168.4	74.3	171.9	119	83	83	82		1.001	5.975	584
1066	172.652	176.065		0.16	0.16	1.33	1.07	0.26	94	94	82	2.03	0.00	83	0.015	97	96	166.8	0.08	0.68	15.46	97.4	172.0	168.3	74.3	171.7	120	83	83	82		1.001	5.649	551
1067	172.815	176.229		0.16	0.16	1.32	1.08	0.26	94	94	82	2.03	0.00	83	0.014	100	99	166.7	0.12	0.70	15.51	97.4	171.9	168.2	74.3	171.6	119	83	82	82		1.001	5.814	567
1068	172.978	176.394		0.16	0.16	1.33	1.08	0.26	94	94	82	2.03	0.00	83	0.013	104	104	166.7	0.02	0.74	15.48	97.1	171.7	168.1	74.3	171.5	118	83	83	82		1.001	6.135	597
1069	173.141	176.558		0.16	0.16	1.32	1.07	0.26	94	94	82	2.05	0.00	90	0.015	97	96	166.7	0.00	0.69	15.47	96.9	171.5	167.9	74.4	171.3	143	83	83	82		1.001	5.738	557
1070	173.304	176.723		0.16	0.17	1.33	1.07	0.26	94	94	82	2.04	0.00	85	0.014	100	100	166.8	-0.07	0.64	15.43	96.8	171.4	167.7	74.3	171.1	137	83	83	82		1.001	5.325	516
1071	173.467	176.888		0.16	0.16	1.33	1.08	0.26	94	94	82	2.02	0.00	84	0.013	104	104	166.7	0.08	0.70	15.58	96.5	171.2	167.6	74.4	171.0	133	83	83	82		1.001	5.829	563
1072	173.630	177.052		0.16	0.16	1.33	1.07	0.26	94	94	82	2.03	0.00	84	0.015	97	96	166.5	0.15	0.76	15.41	96.4	171.1	167.5	74.4	170.9	130	83	83	82		1.001	6.296	608
1073	173.794	177.216		0.16	0.16	1.33	1.07	0.26	94	94	82	2.03	0.00	84	0.014	101	99	166.6	-0.06	0.70	15.39	96.2	171.0	167.4	74.5	170.7	128	83	83	82		1.001	5.808	559
1074	173.958	177.381		0.16	0.16	1.33	1.07	0.26	94	94	82	2.02	0.00	84	0.013	105	104	166.6	-0.04	0.66	15.48	96.1	170.8	167.2	74.5	170.6	127	83	83	82		1.001	5.483	528
1075	174.121	177.545		0.16	0.16	1.33	1.07	0.26	94	94	82	2.03	0.00	84	0.016	94	93	166.5	0.13	0.74	15.49	96.0	170.6	167.0	74.4	170.4	125	83	83	82		1.001	6.132	589
1076	174.284	177.710		0.16	0.17	1.32	1.07	0.26	95	94	82	2.04	0.00	84	0.015	97	96	166.6	-0.07	0.66	15.36	95.8	170.5	166.9	74.4	170.2	124	83	83	82		1.001	5.489	526
1077	174.448	177.874		0.16	0.16	1.32	1.08	0.26	95	94	82	2.03	0.00	84	0.016	94	93	166.6	-0.06	0.72	15.55	95.7	170.3	166.7	74.4	170.1	123	83	83	82		1.001	5.970	572
1078	174.611	178.039		0.16	0.16	1.32	1.08	0.26	95	94	82	2.04	0.00	84	0.014	100	100	166.6	0.05	0.72	15.49	95.6	170.2	166.6	74.4	170.0	122	83	83	82		1.001	5.987	573
1079	174.774	178.204		0.16	0.17	1.33	1.07	0.26	95	94	82	2.03	0.00	84	0.015	97	96	166.5	0.07	0.64	15.44	95.4	170.0	166.5	74.3	169.8	121	83	83	82		1.001	5.326	509
1080	174.938	178.368		0.16	0.16	1.33	1.07	0.26	95	94	82	2.04	0.00	84	0.015	97	96	166.5	-0.04	0.60	15.55	95.2	169.9	166.4	74.4	169.7	121	83	83	82		1.001	5.029	480
1081	175.101	178.532		0.16	0.16	1.33	1.08	0.26	95	94	82	2.02	0.00	84	0.014	100	99	166.6	-0.08	0.68	15.46	95.0	169.7	166.1	74.4	169.4	121	83	83	82		1.001	5.660	538
1082	175.264	178.697		0.16	0.16	1.33	1.07	0.26	95	94	82	2.03	0.00	84	0.015	97	96	166.5	0.11	0.72	15.50	94.9	169.5	166.0	74.4	169.3	120	83	83	82		1.001	5.967	567
1083	175.427	178.862		0.16	0.16	1.33	1.08	0.26	95	94	82	2.04	0.00	84	0.014	100	100	166.7	-0.14	0.68	15.53	94.8	169.4	165.9	74.4	169.2	120	83	83	82		1.001	5.646	536
1084	175.590	179.026		0.16	0.16	1.33	1.08	0.26	95	94	82	2.03	0.00	84	0.016	93	93	166.5	0.18	0.70	15.47	94.7	169.3	165.7	74.4	169.1	119	83	83	82		1.001	5.805	550
1085	175.753	179.191		0.16	0.16	1.33	1.07	0.26	95	94	82	2.03	0.00	84	0.015	97	96	166.6	-0.14	0.72	15.42	94.5	169.2	165.6	74.4	168.9	118	83	83	82		1.001	5.971	565
1086	175.916	179.356		0.16	0.16	1.33	1.07	0.26	95	94	83	2.04	0.00	84	0.016	93	93	166.4	0.17	0.68	15.51	94.3	169.0	165.5	74.5	168.8	118	83	83	83		1.001	5.647	533
1087	176.080	179.520		0.16	0.16	1.32	1.07	0.26	95	94	83	2.03	0.00	84	0.014	101	99	166.5	-0.09	0.70	15.56	94.2	168.9	165.4	74.5	168.6	117	83	83	83		1.001	5.813	548
1088	176.243	179.684		0.16	0.16	1.33	1.08	0.26	95	94	82	2.02	0.00	84	0.014	100	99	166.5	0.08	0.69	15.52	94.0	168.7	165.2	74.5	168.4	118	83	83	82		1.001	5.702	536
1089	176.406	179.848		0.16	0.16	1.33	1.07	0.26	95	94	83	2.03	0.00	84	0.015	97	96	166.5	-0.04	0.71	15.39	93.8	168.5	165.0	74.5	168.3	118	83	83	83		1.001	5.915	555
1090	176.570	180.013		0.16	0.16	1.32	1.08	0.26	95	94	82	2.04	0.00	84	0.015	97	96	166.6	-0.06	0.68	15.48	93.7	168.4	164.9	74.5	168.2	118	83	83	82		1.001	5.646	529
1091	176.734	180.177		0.16	0.16	1.32	1.07	0.26	95	94	83	2.02	0.00	84	0.015	97	96	166.5	0.08	0.70	15.43	93.5	168.2	164.7	74.5	168.0	118	83	83	83		1.001	5.808	544
1092	176.897	180.342		0.16	0.17	1.32	1.08	0.26	95	94	82	2.03	0.00	84	0.015	97	96	166.5	-0.02	0.70	15.47	93.2	168.1	164.6	74.6	167.9	117	83	83	82		1.001	5.810	542
1093	177.060	180.507		0.16	0.16	1.32	1.07	0.26	95	94	83	2.03	0.00	84	0.014	100	100	166.4	0.06	0.70	15.49	93.1	167.9	164.4	74.6	167.7	117	83	83	83		1.001	5.809	541
1094	177.223	180.672		0.16	0.16	1.33	1.07	0.26	95	94	83	2.02	0.00	84	0.014	100	100	166.6	-0.13	0.68	15.50	93.0	167.8	164.3	74.6	167.6	117	83	83	83		1.001	5.644	525
1095	177.386	180.835		0.16	0.16	1.32	1.07	0.26	95	94	82	2.03	0.00	84	0.016	93	92	166.5	0.04	0.66	15.52	92.8	167.7	164.2	74.6	167.4	116	83	83	82		1.001	5.485	509
1096	177.549	181.000		0.16	0.16	1.33	1.07	0.26	95	94	83	2.03	0.00	84	0.016	93	93	166.6	-0.07	0.70	15.59	92.6	167.5	164.0	74.7	167.3	117	83	83	83		1.001	5.806	538
1097	177.712	181.164		0.16	0.16	1.33	1.08	0.26	95	94	83	2.03	0.00	84	0.014	100	99	166.7	-0.08	0.69	15.50	92.4	167.3	163.8	74.7	167.1	117	83	83	83		1.001	5.768	533
1098	177.875	181.329		0.16	0.17	1.33	1.07	0.26	95	94	83	2.03	0.00	84	0.015	97	96	166.6	0.09	0.69	15.42	92.2	167.2	163.7	74.7	167.0	116	83	83	83		1.001	5.748	531
1099	178.039	181.494		0.16	0.16	1.33	1.08	0.26	95	94	83	2.04	0.00	84	0.015	97	96	166.5	0.07	0.66	15.43	92.1	167.1	163.6	74.7	166.9	116	83	83	83		1.001	5.483	506
1100	178.202	181.658		0.16	0.16	1.32	1.06	0.26	95	95	83	2.03	0.00	90	0.015	97	96	166.6	-0.11	0.70	15.53	91.9	167.0	163.5	74.8	166.7	138	84	84	83		1.001	5.808	535
1101	178.366	181.823		0.16	0.17	1.33	1.07	0.26	95	95	83	2.04	0.00	86	0.015	97	96	166.5	0.12	0.70	15.51	91.7	166.8	163.4	74.8	166.6	133	83	83	83		1.001	5.806	533
1102	178.529	181.986		0.16	0.16	1.32	1.07	0.26	95	95	83	2.04	0.00	85	0.016	94	92	166.3	0.25	0.62	15.43	91.6	166.6	163.2	74.8	166.4	129	83	83	83		1.001	5.160	473
1103	178.692	182.151		0.16	0.17	1.32	1.07	0.26	95	95	83	2.02	0.00	84	0.015	97	96	166.4	-0.18	0.66	15.51	91.4	166.5	163.2	74.9	166.2	126	83	83	83		1.001	5.482	502
1104	178.856	182.316		0.16	0.16	1.32	1.08	0.26	95	95	83	2.02	0.00	84	0.013	104	103	166.4	0.02	0.64	15.49	91.2	166.3	163.1	74.9	166.1	124	83	83	83		1.001	5.320	486
1105	179.019	182.480		0.16	0.16	1.32	1.07	0.26	95	95	83	2.03	0.00	84	0.014	100	99	166.3	0.11	0.74	15.52	91.0	166.2	162.6	74.9	165.9	122	83	83	83		1.001	6.131	559
1106	179.182	182.645		0.16	0.17	1.32	1.07	0.26	95	95	83	2.03	0.00	84	0.013	104	103	166.5	-0.21	0.73	15.52	90.9	166.1	162.5	75.0	165.8	121	83	83	83		1.001	6.047	550

Elapsed Time	Particulate Sampling Data																	Fuel Weight, lb		Flow, gpm		Temperature Data, oF												
	Gas Meter Cubic Feet (1)	Gas Meter Cubic Feet (2)	Gas Meter Cubic Feet (amb)	Sample Rate, cfm (1)	Sample Rate, cfm (2)	Orifice dH (1)	Orifice dH (2)	Orifice dH (amb)	Meter oF (1)	Meter oF (2)	Meter oF (amb)	Meter Vac. In. Hg. (1)	Meter Vac. In. Hg. (2)	Dilution Tunnel Temp.	Dilution Tunnel dP	Pro. Rate (%) (1)	Pro. Rate (%) (2)	Scale Reading	Weight Change	Load Side Liquid Flow Rate	Boiler Side Liquid Flow Rate (optional)	Thermopile ΔT	Boiler to Heat Exch. Temp.	Heat Exch to Boiler Temp.	Inlet Load Temp.	Outlet Load Temp.	Stack	Filter (1)	Filter (2)	Ambient		Specific Heat of Inlet Water (BTU/lb-°F)	Mass Flow Rate of Inlet Water (lb/min)	Heat Output, Btu
1107	179.346	182.810		0.16	0.16	1.32	1.07	0.26	95	95	83	2.02	0.00	84	0.014	101	100	166.4	0.07	0.70	15.52	90.7	165.9	162.4	75.0	165.7	121	83	83	83		1.001	5.809	527
1108	179.509	182.974		0.16	0.16	1.32	1.07	0.26	95	95	83	2.03	0.00	84	0.014	100	99	166.4	0.01	0.66	15.48	90.6	165.8	162.3	75.0	165.6	120	83	84	83		1.001	5.493	498
1109	179.672	183.138		0.16	0.16	1.32	1.07	0.26	95	95	83	2.02	0.00	84	0.015	97	96	166.5	-0.02	0.68	15.45	90.4	165.6	162.1	75.0	165.4	120	84	84	83		1.001	5.647	511
1110	179.835	183.303		0.16	0.16	1.32	1.08	0.26	95	95	83	2.02	0.00	84	0.014	100	100	166.5	-0.05	0.68	15.49	90.3	165.5	162.0	75.0	165.3	119	83	84	83		1.001	5.645	510
1111	179.998	183.467		0.16	0.16	1.33	1.08	0.26	95	95	83	2.04	0.00	84	0.014	100	99	166.2	0.28	0.70	15.47	90.1	165.4	161.9	75.1	165.1	119	83	84	83		1.001	5.807	524
1112	180.161	183.631		0.16	0.16	1.33	1.07	0.26	95	95	83	2.02	0.00	84	0.012	108	107	166.3	-0.11	0.68	15.47	89.9	165.2	161.8	75.1	165.0	118	83	84	83		1.001	5.643	508
1113	180.324	183.796		0.16	0.16	1.33	1.07	0.26	95	95	83	2.02	0.00	84	0.016	93	93	166.4	-0.09	0.72	15.36	89.8	165.1	161.6	75.1	164.9	118	84	84	83		1.001	5.971	537
1114	180.488	183.961		0.16	0.17	1.32	1.07	0.26	95	95	83	2.04	0.00	84	0.013	104	103	166.2	0.23	0.74	15.46	89.5	164.9	161.4	75.2	164.7	117	84	84	83		1.001	6.126	549
1115	180.651	184.126		0.16	0.16	1.32	1.07	0.26	95	95	83	2.03	0.00	84	0.014	100	100	166.5	-0.34	0.70	15.40	89.5	164.8	161.3	75.1	164.6	117	84	84	83		1.001	5.805	520
1116	180.815	184.290		0.16	0.16	1.32	1.07	0.26	95	95	83	2.03	0.00	84	0.013	104	103	166.2	0.32	0.71	15.53	89.2	164.6	161.1	75.2	164.4	116	84	84	83		1.001	5.912	528
1117	180.978	184.454		0.16	0.16	1.32	1.07	0.26	95	95	83	2.02	0.00	84	0.014	100	99	166.4	-0.18	0.72	15.45	89.1	164.5	161.0	75.2	164.3	117	84	84	83		1.001	5.970	532
1118	181.142	184.618		0.16	0.16	1.32	1.07	0.26	95	95	83	2.02	0.00	84	0.014	101	99	166.4	-0.05	0.72	15.47	89.0	164.4	160.9	75.1	164.1	117	84	84	83		1.001	5.969	532
1119	181.305	184.783		0.16	0.16	1.32	1.07	0.26	95	95	83	2.04	0.00	84	0.015	97	96	166.4	0.02	0.70	15.52	88.9	164.2	160.7	75.1	164.0	117	84	84	83		1.001	5.807	517
1120	181.468	184.948		0.16	0.17	1.33	1.07	0.26	95	95	83	2.03	0.00	85	0.014	100	100	166.5	-0.03	0.72	15.53	88.8	164.0	160.5	75.0	163.8	116	84	84	83		1.001	5.971	531
1121	181.632	185.113		0.16	0.16	1.32	1.07	0.26	95	95	83	2.02	0.00	85	0.015	97	96	166.5	-0.02	0.70	15.51	88.7	163.9	160.5	75.0	163.7	116	84	84	83		1.001	5.806	516
1122	181.795	185.277		0.16	0.16	1.33	1.07	0.26	95	95	83	2.04	0.00	85	0.012	108	107	166.5	0.00	0.66	15.48	88.7	163.8	160.3	74.9	163.5	115	84	84	83		1.001	5.483	487
1123	181.957	185.442		0.16	0.17	1.33	1.07	0.26	95	95	83	2.03	0.00	85	0.014	99	100	166.5	-0.04	0.70	15.49	88.6	163.6	160.2	74.8	163.4	115	84	84	83		1.001	5.808	515
1124	182.121	185.606		0.16	0.16	1.32	1.07	0.26	95	95	83	2.02	0.00	85	0.015	97	96	166.4	0.15	0.72	15.43	88.4	163.4	160.0	74.8	163.2	115	84	84	83		1.001	5.965	528
1125	182.284	185.770		0.16	0.16	1.32	1.07	0.26	96	95	83	2.02	0.00	85	0.014	100	99	166.4	-0.04	0.73	15.37	88.4	163.4	159.9	74.8	163.1	114	84	84	83		1.001	6.076	537
1126	182.447	185.935		0.16	0.16	1.33	1.07	0.26	95	95	83	2.04	0.00	85	0.014	100	100	166.3	0.05	0.76	15.41	88.2	163.2	159.8	74.8	163.0	114	84	84	83		1.001	6.294	556
1127	182.610	186.100		0.16	0.16	1.33	1.07	0.26	96	95	83	2.04	0.00	85	0.015	96	96	166.3	0.04	0.72	15.43	88.1	163.1	159.6	74.7	162.8	114	84	84	83		1.001	5.966	526
1128	182.774	186.265		0.16	0.16	1.32	1.07	0.26	96	95	83	2.04	0.00	85	0.014	100	100	166.5	-0.22	0.66	15.53	88.0	162.9	159.6	74.7	162.7	115	84	84	83		1.001	5.481	483
1129	182.937	186.429		0.16	0.16	1.32	1.07	0.26	96	95	83	2.04	0.00	85	0.014	100	99	166.3	0.18	0.68	15.53	87.9	162.7	159.4	74.6	162.5	114	84	84	83		1.001	5.646	497
1130	183.101	186.593		0.16	0.16	1.32	1.07	0.26	96	95	83	2.03	0.00	85	0.015	97	96	166.5	-0.10	0.68	15.48	87.7	162.6	159.4	74.7	162.4	119	84	84	83		1.001	5.645	496
1131	183.264	186.757		0.16	0.16	1.32	1.07	0.26	96	95	83	2.02	0.00	90	0.014	100	100	166.4	0.09	0.78	15.52	87.5	162.4	159.1	74.7	162.2	135	84	84	83		1.001	6.452	565
1132	183.427	186.921		0.16	0.16	1.32	1.07	0.26	96	95	83	2.02	0.00	86	0.013	104	103	166.2	0.17	0.66	15.52	87.3	162.3	159.1	74.8	162.1	134	84	84	83		1.001	5.483	479
1133	183.590	187.086		0.16	0.17	1.31	1.07	0.26	96	95	83	2.04	0.00	91	0.016	94	94	166.2	0.01	0.62	15.52	87.2	162.1	158.9	74.8	162.0	146	84	84	83		1.001	5.169	451
1134	183.754	187.250		0.16	0.16	1.32	1.07	0.26	96	95	83	2.02	0.00	93	0.014	101	100	166.1	0.11	0.70	15.61	87.0	162.0	158.8	74.9	161.8	153	84	84	83		1.001	5.804	505
1135	183.917	187.415		0.16	0.16	1.32	1.07	0.26	96	95	83	2.04	0.00	94	0.015	97	97	165.8	0.22	0.73	15.44	86.8	161.9	158.7	74.9	161.7	158	85	85	83		1.001	6.108	531
1136	184.080	187.579		0.16	0.16	1.32	1.07	0.26	96	95	83	2.04	0.00	95	0.015	97	97	165.5	0.38	0.70	15.41	86.6	161.8	158.5	75.0	161.6	164	85	85	83		1.001	5.805	503
1137	184.242	187.743		0.16	0.16	1.33	1.07	0.26	96	95	83	2.03	0.00	96	0.015	97	97	165.4	0.10	0.68	15.49	86.3	161.6	158.3	75.1	161.4	169	85	85	83		1.001	5.644	488
1138	184.405	187.907		0.16	0.16	1.32	1.07	0.26	96	95	83	2.03	0.00	97	0.014	101	100	164.8	0.55	0.72	15.48	86.3	161.6	158.4	75.2	161.4	175	85	85	83		1.001	5.968	515
1139	184.569	188.071		0.16	0.16	1.32	1.07	0.26	96	95	83	2.03	0.00	98	0.014	102	100	164.3	0.54	0.76	15.43	86.1	161.6	158.3	75.3	161.4	182	85	85	83		1.001	6.289	542
1140	184.731	188.235		0.16	0.16	1.32	1.07	0.26	96	95	83	2.03	0.00	100	0.014	101	101	163.7	0.62	0.74	15.40	86.2	161.9	158.6	75.3	161.5	188	85	85	83		1.001	6.124	528
1141	184.894	188.400		0.16	0.16	1.33	1.07	0.26	96	95	83	2.03	0.00	101	0.015	98	98	163.2	0.46	0.66	15.53	86.4	162.2	158.9	75.4	161.9	192	86	86	83		1.001	5.479	474
1142	185.057	188.563		0.16	0.16	1.33	1.07	0.26	96	95	83	2.05	0.00	102	0.015	98	97	162.5	0.66	0.66	15.45	86.9	162.8	159.5	75.5	162.4	197	86	86	83		1.001	5.480	477
1143	185.220	188.727		0.16	0.16	1.32	1.07	0.26	96	95	83	2.03	0.00	103	0.015	98	97	161.7	0.81	0.74	15.44	87.4	163.3	159.9	75.6	162.9	201	86	86	83		1.001	6.126	536
1144	185.383	188.890		0.16	0.16	1.32	1.07	0.26	96	96	83	2.04	0.00	104	0.014	102	100	161.2	0.56	0.72	15.54	87.9	164.0	160.5	75.6	163.5	205	86	86	83		1.001	5.964	525
1145	185.546	189.053		0.16	0.16	1.32	1.07	0.26	96	96	83	2.04	0.00	105	0.015	98	97	160.6	0.61	0.72	15.61	88.5	164.5	161.1	75.6	164.1	209	86	86	83		1.001	5.961	528
1146	185.709	189.217		0.16	0.16	1.32	1.07	0.26	96	96	83	2.05	0.00	106	0.015	98	97	160.0	0.58	0.66	15.45	89.1	165.1	161.8	75.6	164.7	212	87	87	83		1.001	5.480	489
1147	185.872	189.381		0.16	0.16	1.32	1.06	0.26	96	96	83	2.05	0.00	107	0.014	102	101	159.4	0.57	0.76	15.47	89.9	165.7	162.2	75.5	165.3	215	87	87	83		1.001	6.287	566
1148	186.035	189.544		0.16	0.16	1.31	1.06	0.26	96	96	83	2.06	0.00	108	0.016	95	94	158.7	0.67	0.68	15.47	90.7	166.5	163.0	75.3	166.0	218	87	87	83		1.001	5.640	512
1149	186.197	189.707		0.16	0.16	1.32	1.06	0.26	96	96	83	2.05	0.00	108	0.014	101	100	158.0	0.71	0.70	15.58	91.4	167.1	163.5	75.3	166.7	221	87	87	83		1.001	5.803	531
1150	186.360	189.870		0.16	0.16	1.32	1.07	0.26	96	96	83	2.06	0.00	109	0.016	95	94	157.4	0.66	0.72	15.45	92.2	167.8	164.2	75.2	167.4	223	87	87	83		1.001	5.968	551
1151	186.522	190.033		0.16	0.16	1.32	1.06	0.26	96	96	83	2.06	0.00	110	0.016	95	94	156.9	0.45	0.76	15.40	93.0	168.5	164.8	75.1	168.1	226	87	88	83		1.001	6.292	586
1152	186.685	190.197		0.16	0.16	1.32	1.06	0.26	96	96	83	2.05	0.00	111	0.014	102	101	156.3	0.65	0.67	15.50	93.7	169.2	165.5	75.0	168.7	227	88	88	83		1.001	5.549	521
1153	186.848	190.359		0.16	0.16	1.32	1.05	0.26	96	96	84	2.05	0.00	111	0.016	96	94	155.6	0.65	0.70	15.55	94.7	170.0	166.3	74.9	169.6	228	88	88	84		1.001	5.802	550
1154	187.010	190.522		0.16	0.16	1.32	1.06	0.26	96	96	83	2.05	0.00	112	0.015	98	97	155.0	0.61	0.72	15.46	95.3	170.5	166.9	74.9	170.2	229	87	87	83		1.001	5.963	569
1155	187.172	190.685		0.16	0.16	1.32	1.06	0.26	96	96	83	2.05	0.00	112	0.015	98	97	154.2	0.75	0.70	15.53	96.1	171.5	167.7	74.9	170.9	230	86	87	83		1.001	5.802	558
1156	187.335	190.848		0.16	0.16	1.32	1.06	0.26	96	96	83	2.05	0.00	113	0.015	99	97	153.6	0.61	0.74	15.48	96.7	172.1	168.4	74.9	171.7	232	85	86	83		1.001	6.126	593
1157	187.497	191.011		0.16	0.16	1.32	1.06	0.26	96	96	83	2.06	0.00	114	0.013	106	105	152.9	0.71	0.70	15.48	97.4	172.9	169.0	75.0	172.4	234	85	86	83		1.001	5.803	566
1158	187.659	191.174		0.16	0.16	1.32	1.05	0.26	96	96	83	2.07	0.00	114	0.014	102	101	152.4	0.56	0.70	15.50	98.2	173.7	169.8	75.0	173.2	236	85	86	83		1.001	5.806	571
1159	187.822	191.336		0.16	0.16	1.32	1.06	0.26	96	96	83	2.05	0.00	115	0.016	96	94	151.7	0.69	0.72	15.55	98.9	174.4	170.4	75.0	173.9	237	86	87	83		1.001	5.963	590
1160	187.984	191.498		0.16	0.16	1.32	1.05	0.26	96	96	83	2.06	0.00	115	0.015	98	97	151.0	0.70	0.72	15.54	99.4	175.1	171.0	75.1	174.6	238	86	87	83		1.001	6.015	599
1161	188.147	191.661		0.16	0.16	1.32	1.05	0.26	96	96	83	2.07	0.00	116	0.015	99	98	150.2	0.81	0.72	15.49	100.1	175.7	171.7	75.2	175.2	241	87	88	83		1.001	5.963	597
1162	188.309	191.824		0.16	0.16	1.32	1.05	0.26	96	96	83	2.07	0.00	117	0.016	95	95	149.6	0.60	0.66	15.52	100.8	176.5	172.5	75.2	176.0	243	87	88	83		1.001	5.476	553
1163	188.471	191.985		0.16	0.16	1.32	1.05	0.26	96	96	83	2.06	0.00	118	0.015	99	97	149.0	0.58	0.72	15.46	101.4	177.2	173.1	75.3	176.7	246	88	88	83		1.001	5.964	605
1164	188.633	192.148		0.16	0.16	1.31	1.05	0.26	96	96	83	2.08	0.00	118	0.015	99	98	148.2	0.75	0.72	15.46	102.2	178.0	173.9	75.3	177.5	248	88	89	83		1.001	5.963	610
1165	188.795	192.310		0.16	0.16	1.31	1.05	0.26	96	96	84	2.08	0.00	119	0.016	96	94	147.4	0.83	0.70	15.47	102.9	178.8	174.7	75.4	178.3	253	88	89	84		1.001	5.800	598
1166	188.957	192.472		0.16	0.16	1.31	1.05	0.26	96	96	84	2.07	0.00	121	0.015	99	98	146.8	0.58	0.68	15.54	103.8	179.7	175.7	75.5	179.3	256	89	89	84		1.001	5.636	586
1167	189.120	192.633		0.16	0.16	1.31	1.04	0.26	96	96	84	2.09	0.00	121	0.014	103	100	146.0	0.86	0.74	15.46	104.6	180.7	176.6	75.5	180.1	259	89	90	84		1.001	6.123	641
1168	189.282	192.795		0.16	0.16	1.31	1.04	0.26	96	96	84	2.08	0.00	122	0.015	99	98	145.4	0.60	0.72	15.43	105.4	181.5	177.3	75.6	180.9	263	89	89	84		1.001	5.959	629

Elapsed Time	Particulate Sampling Data																	Fuel Weight, lb		Flow, gpm		Temperature Data, oF													
	Gas Meter Cubic Feet (1)	Gas Meter Cubic Feet (2)	Gas Meter Cubic Feet (amb)	Sample Rate, cfm (1)	Sample Rate, cfm (2)	Orifice dH (1)	Orifice dH (2)	Orifice dH (amb)	Meter oF (1)	Meter oF (2)	Meter oF (amb)	Meter Vac. In. Hg. (1)	Meter Vac. In. Hg. (2)	Dilution Tunnel Temp.	Dilution Tunnel dP	Pro. Rate (%) (1)	Pro. Rate (%) (2)	Scale Reading	Weight Change	Load Side Liquid Flow Rate	Boiler Side Liquid Flow Rate (optional)	Thermopile ΔT	Boiler to Heat Exch. Temp.	Heat Exch to Boiler Temp.	Inlet Load Temp.	Outlet Load Temp.	Stack	Filter (1)	Filter (2)	Ambient		Specific Heat of Inlet Water (BTU/lb-°F)	Mass Flow Rate of Inlet Water (lb/min)	Heat Output, Btu
1169	189.443	192.957		0.16	0.16	1.32	1.05	0.26	96	96	84	2.05	0.00	117	0.015	98	97	144.7	0.69	0.68	15.41	106.3	182.4	178.3	75.6	181.9	254	88	87	84		1.001	5.613	598
1170	189.606	193.120		0.16	0.16	1.31	1.05	0.26	96	96	84	2.05	0.00	103	0.014	101	100	144.4	0.29	0.70	15.48	106.7	182.9	178.8	75.7	182.4	236	86	85	84		1.001	5.778	617
1171	189.768	193.282		0.16	0.16	1.31	1.05	0.26	96	96	84	2.05	0.00	98	0.014	100	99	144.0	0.40	0.72	15.36	107.1	183.2	179.2	75.7	182.8	226	85	84	84		1.001	5.954	639
1172	189.931	193.445		0.16	0.16	1.31	1.05	0.26	96	96	84	2.06	0.00	95	0.014	101	99	143.7	0.31	0.70	15.46	107.2	183.4	179.3	75.8	183.0	219	85	84	84		1.001	5.797	622
1173	190.094	193.607		0.16	0.16	1.30	1.04	0.26	96	96	84	2.07	0.00	95	0.012	109	107	143.4	0.31	0.68	15.48	107.4	183.5	179.6	75.8	183.2	212	85	84	84		1.001	5.639	606
1174	190.257	193.770		0.16	0.16	1.30	1.05	0.26	96	96	84	2.07	0.00	94	0.014	101	99	143.4	-0.04	0.64	15.47	107.4	183.5	179.6	75.8	183.2	207	85	84	84		1.001	5.314	571
1175	190.420	193.933		0.16	0.16	1.30	1.05	0.26	96	96	84	2.07	0.00	93	0.014	101	99	143.3	0.13	0.68	15.42	107.4	183.5	179.7	75.8	183.3	203	86	85	84		1.001	5.637	606
1176	190.582	194.095		0.16	0.16	1.31	1.04	0.26	96	96	84	2.06	0.00	93	0.014	100	98	143.0	0.26	0.68	15.48	107.4	183.5	179.7	75.8	183.3	200	86	85	84		1.001	5.631	606
1177	190.744	194.257		0.16	0.16	1.31	1.05	0.26	96	96	84	2.07	0.00	92	0.015	96	95	143.0	-0.01	0.66	15.53	107.3	183.6	179.7	76.0	183.3	197	86	85	84		1.001	5.467	587
1178	190.907	194.420		0.16	0.16	1.30	1.05	0.26	96	96	84	2.06	0.00	92	0.014	100	99	142.9	0.07	0.60	15.46	107.3	183.6	179.8	76.0	183.3	195	86	85	84		1.001	5.026	540
1179	191.070	194.583		0.16	0.16	1.31	1.05	0.26	96	96	84	2.05	0.00	91	0.014	100	99	142.9	0.08	0.56	15.51	107.4	183.6	179.7	76.0	183.3	193	86	85	84		1.001	4.695	505
1180	191.232	194.745		0.16	0.16	1.31	1.04	0.26	96	96	84	2.06	0.00	91	0.014	100	98	142.9	-0.04	0.68	15.47	107.2	183.5	179.7	76.0	183.3	191	86	86	84		1.001	5.626	604
1181	191.395	194.908		0.16	0.16	1.30	1.05	0.26	96	96	84	2.05	0.00	91	0.016	94	93	142.7	0.19	0.66	15.47	107.3	183.6	179.8	76.1	183.3	189	86	86	84		1.001	5.472	588
1182	191.557	195.071		0.16	0.16	1.31	1.05	0.26	97	96	84	2.05	0.00	90	0.013	103	103	142.9	-0.16	0.64	15.45	107.1	183.5	179.7	76.1	183.3	187	86	86	84		1.001	5.308	569
1183	191.720	195.234		0.16	0.16	1.31	1.05	0.26	97	96	84	2.06	0.00	90	0.015	97	95	142.7	0.14	0.68	15.50	107.1	183.5	179.7	76.1	183.2	185	86	86	84		1.001	5.633	604
1184	191.882	195.397		0.16	0.16	1.31	1.05	0.26	97	96	84	2.06	0.00	90	0.013	103	103	142.9	-0.11	0.62	15.47	107.2	183.5	179.7	76.1	183.3	183	86	86	84		1.001	5.145	552
1185	192.044	195.559		0.16	0.16	1.31	1.05	0.26	97	96	84	2.05	0.00	90	0.014	99	98	142.8	0.01	0.64	15.51	107.0	183.5	179.6	76.2	183.2	181	86	86	84		1.001	5.309	569
1186	192.207	195.722		0.16	0.16	1.31	1.05	0.26	97	96	84	2.05	0.00	90	0.014	100	99	142.8	0.07	0.66	15.44	106.9	183.4	179.6	76.2	183.1	179	86	86	84		1.001	5.470	585
1187	192.370	195.885		0.16	0.16	1.31	1.05	0.26	97	96	84	2.07	0.00	90	0.014	100	99	142.8	-0.04	0.64	15.41	106.8	183.3	179.5	76.2	183.1	177	86	86	84		1.001	5.308	568
1188	192.533	196.048		0.16	0.16	1.31	1.05	0.26	97	96	84	2.06	0.00	90	0.015	97	95	142.8	-0.01	0.63	15.44	106.7	183.3	179.5	76.3	183.1	175	86	86	84		1.001	5.217	558
1189	192.695	196.211		0.16	0.16	1.31	1.04	0.26	97	96	84	2.06	0.00	90	0.015	96	95	142.9	-0.07	0.68	15.47	106.6	183.2	179.4	76.4	183.0	173	86	86	84		1.001	5.631	601
1190	192.858	196.373		0.16	0.16	1.30	1.05	0.26	97	96	84	2.06	0.00	90	0.013	104	102	142.7	0.16	0.68	15.50	106.5	183.2	179.4	76.5	183.0	171	86	86	84		1.001	5.631	600
1191	193.021	196.536		0.16	0.16	1.31	1.05	0.26	97	96	84	2.05	0.00	90	0.014	100	99	142.7	-0.01	0.68	15.61	106.4	183.1	179.3	76.5	182.9	169	86	86	84		1.001	5.632	600
1192	193.183	196.699		0.16	0.16	1.31	1.05	0.26	97	97	84	2.05	0.00	90	0.013	103	102	142.8	-0.03	0.68	15.40	106.2	183.0	179.3	76.6	182.8	168	86	86	84		1.001	5.629	598
1193	193.346	196.862		0.16	0.16	1.31	1.04	0.26	97	97	84	2.06	0.00	90	0.013	104	102	142.7	0.03	0.66	15.49	106.1	183.0	179.2	76.6	182.8	166	86	86	84		1.001	5.468	581
1194	193.509	197.025		0.16	0.16	1.30	1.04	0.26	97	97	84	2.05	0.00	90	0.015	97	95	142.7	0.03	0.66	15.46	106.0	183.0	179.2	76.7	182.7	165	86	86	84		1.001	5.469	581
1195	193.673	197.188		0.16	0.16	1.32	1.06	0.26	97	97	84	2.06	0.00	90	0.014	101	99	142.8	-0.13	0.68	15.45	106.0	182.9	179.1	76.6	182.6	163	86	86	84		1.001	5.634	598
1196	193.836	197.351		0.16	0.16	1.32	1.06	0.26	97	97	84	2.06	0.00	90	0.015	97	95	142.7	0.15	0.64	15.44	106.0	182.9	179.1	76.6	182.6	162	86	86	84		1.001	5.310	563
1197	194.000	197.515		0.16	0.16	1.32	1.06	0.26	97	97	84	2.06	0.00	90	0.014	101	99	142.8	-0.14	0.64	15.47	105.9	182.7	179.0	76.5	182.5	160	86	86	84		1.001	5.308	563
1198	194.164	197.680		0.16	0.17	1.32	1.06	0.26	97	97	84	2.07	0.00	90	0.014	101	100	142.7	0.11	0.64	15.42	105.8	182.7	178.9	76.6	182.4	159	86	86	84		1.001	5.306	562
1199	194.327	197.843		0.16	0.16	1.32	1.06	0.26	97	97	84	2.08	0.00	90	0.014	100	99	142.7	0.06	0.66	15.44	105.9	182.6	178.8	76.4	182.4	158	86	86	84		1.001	5.470	580
1200	194.490	198.007		0.16	0.16	1.33	1.05	0.26	97	97	84	2.08	0.00	90	0.013	104	103	142.8	-0.17	0.66	15.46	105.8	182.6	178.8	76.5	182.3	157	86	86	84		1.001	5.470	579
1201	194.654	198.170		0.16	0.16	1.33	1.06	0.26	97	97	84	2.07	0.00	90	0.014	101	99	142.8	0.03	0.60	15.46	105.7	182.5	178.9	76.4	182.2	155	86	86	84		1.001	4.984	527
1202	194.817	198.334		0.16	0.16	1.32	1.06	0.26	97	97	84	2.06	0.00	90	0.014	100	99	142.7	0.12	0.66	15.54	105.7	182.4	178.6	76.4	182.1	154	86	86	84		1.001	5.468	579
1203	194.981	198.498		0.16	0.16	1.32	1.06	0.26	97	97	84	2.06	0.00	90	0.014	101	99	142.7	-0.05	0.66	15.45	105.5	182.3	178.5	76.5	182.0	153	86	86	84		1.001	5.471	578
1204	195.145	198.663		0.16	0.17	1.32	1.06	0.26	97	97	84	2.06	0.00	90	0.013	105	104	142.7	0.05	0.66	15.45	105.5	182.3	178.4	76.5	181.9	152	86	86	84		1.001	5.468	577
1205	195.308	198.826		0.16	0.16	1.32	1.06	0.26	97	97	85	2.08	0.00	90	0.014	100	99	142.8	-0.10	0.70	15.46	105.4	182.2	178.3	76.5	181.8	151	86	86	85		1.001	5.791	611
1206	195.473	198.990		0.17	0.16	1.32	1.06	0.26	97	97	84	2.08	0.00	90	0.015	98	96	142.7	0.05	0.66	15.42	105.3	182.1	178.3	76.5	181.8	151	86	86	84		1.001	5.469	576
1207	195.636	199.153		0.16	0.16	1.31	1.06	0.26	97	97	84	2.07	0.00	90	0.014	100	99	142.8	-0.05	0.68	15.37	105.2	182.0	178.2	76.5	181.7	150	86	86	84		1.001	5.613	591
1208	195.800	199.317		0.16	0.16	1.32	1.06	0.26	97	97	84	2.08	0.00	90	0.014	101	99	142.8	0.00	0.68	15.55	105.0	181.9	178.1	76.5	181.6	149	86	86	84		1.001	5.631	592
1209	195.964	199.481		0.16	0.16	1.32	1.06	0.26	97	97	84	2.07	0.00	90	0.014	101	99	142.8	-0.03	0.66	15.41	104.9	181.8	178.0	76.6	181.5	148	86	86	84		1.001	5.467	574
1210	196.127	199.646		0.16	0.16	1.33	1.06	0.26	97	97	84	2.06	0.00	90	0.014	100	100	142.8	0.07	0.64	15.47	104.9	181.7	177.9	76.6	181.4	147	86	86	84		1.001	5.307	557
1211	196.290	199.809		0.16	0.16	1.32	1.05	0.26	97	97	84	2.06	0.00	90	0.014	100	99	142.9	-0.13	0.68	15.47	104.7	181.6	177.8	76.6	181.3	146	86	86	84		1.001	5.628	590
1212	196.454	199.972		0.16	0.16	1.32	1.06	0.26	97	97	84	2.07	0.00	90	0.014	101	99	142.8	0.04	0.66	15.42	104.6	181.5	177.7	76.6	181.2	146	86	86	84		1.001	5.469	572
1213	196.617	200.136		0.16	0.16	1.32	1.06	0.26	97	97	84	2.07	0.00	90	0.014	100	99	142.9	-0.09	0.66	15.52	104.4	181.4	177.7	76.8	181.1	145	86	86	84		1.001	5.470	572
1214	196.781	200.300		0.16	0.16	1.33	1.06	0.26	97	97	84	2.08	0.00	90	0.013	105	103	142.8	0.16	0.72	15.39	104.2	181.3	177.5	76.8	181.0	144	86	86	84		1.001	5.951	621
1215	196.945	200.464		0.16	0.16	1.32	1.06	0.26	97	97	84	2.07	0.00	90	0.013	105	103	142.7	0.11	0.64	15.42	104.0	181.2	177.3	76.8	180.8	144	86	86	84		1.001	5.307	553
1216	197.109	200.628		0.16	0.16	1.32	1.05	0.26	97	97	84	2.08	0.00	90	0.014	101	99	142.9	-0.22	0.66	15.44	103.9	181.1	177.3	76.9	180.8	143	86	86	84		1.001	5.467	569
1217	197.272	200.792		0.16	0.16	1.32	1.06	0.26	97	97	84	2.06	0.00	90	0.013	104	103	142.8	0.11	0.62	15.46	103.8	181.0	177.2	76.9	180.7	142	86	86	84		1.001	5.146	535
1218	197.436	200.955		0.16	0.16	1.31	1.05	0.26	97	97	84	2.08	0.00	90	0.014	101	99	142.8	-0.06	0.70	15.46	103.6	180.8	177.0	76.9	180.5	142	86	86	84		1.001	5.794	601
1219	197.600	201.119		0.16	0.16	1.32	1.06	0.26	97	97	84	2.06	0.00	90	0.015	97	96	142.8	0.05	0.64	15.38	103.6	180.8	177.0	76.9	180.5	141	86	86	84		1.001	5.308	550
1220	197.764	201.282		0.16	0.16	1.32	1.06	0.26	97	97	84	2.06	0.00	90	0.014	101	99	142.7	0.08	0.66	15.51	103.5	180.7	176.9	76.9	180.4	140	86	86	84		1.001	5.466	566
1221	197.927	201.446		0.16	0.16	1.32	1.06	0.26	97	97	84	2.08	0.00	90	0.015	97	96	142.8	-0.07	0.68	15.47	103.4	180.5	176.9	76.8	180.2	140	86	86	84		1.001	5.625	582
1222	198.090	201.611		0.16	0.16	1.33	1.06	0.26	97	97	84	2.07	0.00	90	0.015	97	96	142.8	-0.05	0.70	15.43	103.4	180.4	176.7	76.8	180.1	139	86	86	84		1.001	5.791	599
1223	198.254	201.774		0.16	0.16	1.33	1.06	0.26	97	97	84	2.08	0.00	90	0.014	101	99	142.8	0.02	0.68	15.59	103.3	180.3	176.5	76.7	180.0	139	86	86	84		1.001	5.630	582
1224	198.418	201.938		0.16	0.16	1.32	1.06	0.26	97	97	84	2.07	0.00	90	0.012	109	107	142.9	-0.07	0.68	15.52	103.1	180.2	176.4	76.8	179.9	138	86	86	84		1.001	5.628	581
1225	198.581	202.102		0.16	0.16	1.32	1.06	0.26	97	97	85	2.08	0.00	90	0.016	94	93	142.9	-0.03	0.65	15.50	103.0	180.0	176.3	76.7	179.7	138	86	86	85		1.001	5.427	560
1226	198.745	202.266		0.16	0.16	1.32	1.06	0.26	97	97	84	2.07	0.00	90	0.015	97	96	142.9	0.04	0.67	15.45	103.0	180.0	176.2	76.7	179.7	137	86	86	84		1.001	5.584	576
1227	198.909	202.430		0.16	0.16	1.32	1.06	0.26	97	97	85	2.06	0.00	90	0.015	97	96	142.8	0.02	0.66	15.42	102.7	179.8	176.1	76.8	179.5	137	86	86	85		1.001	5.462	562
1228	199.073	202.594		0.16	0.16	1.32	1.06	0.26	97	97	84	2.06	0.00	90	0.014	101	99	142.8	0.01	0.64	15.50	102.7	179.8	176.0	76.7	179.4	136	86	86	84		1.001	5.305	546
1229	199.237	202.757		0.16	0.16	1.32	1.05	0.26	97	97	85	2.07	0.00	90	0.015	97	95	142.9	-0.04	0.70	15.49	102.6	179.6	175.9	76.7	179.3	135	86	86	85		1.001	5.791	595
1230	199.400	202.921		0.16	0.16	1.32	1.06	0.26	97	97	84	2.07	0.00	90	0.015	97	96	142.8	0.05	0.68	15.50	102.4	179.4	175.7	76.7	179.2	135	86	86	84		1.001	5.629	577

Elapsed Time	Particulate Sampling Data																	Fuel Weight, lb		Flow, gpm		Temperature Data, oF													
	Gas Meter Cubic Feet (1)	Gas Meter Cubic Feet (2)	Gas Meter Cubic Feet (amb)	Sample Rate, cfm (1)	Sample Rate, cfm (2)	Orifice dH (1)	Orifice dH (2)	Orifice dH (amb)	Meter oF (1)	Meter oF (2)	Meter oF (amb)	Meter Vac. In. Hg. (1)	Meter Vac. In. Hg. (2)	Dilution Tunnel Temp.	Dilution Tunnel dP	Pro. Rate (%) (1)	Pro. Rate (%) (2)	Scale Reading	Weight Change	Load Side Liquid Flow Rate	Boiler Side Liquid Flow Rate (optional)	Thermopile ΔT	Boiler to Heat Exch. Temp.	Heat Exch to Boiler Temp.	Inlet Load Temp.	Outlet Load Temp.	Stack	Filter (1)	Filter (2)	Ambient		Specific Heat of Inlet Water (BTU/lb-°F)	Mass Flow Rate of Inlet Water (lb/min)	Heat Output, Btu
1231	199.564	203.084		0.16	0.16	1.32	1.06	0.26	97	97	84	2.07	0.00	90	0.013	105	102	142.9	-0.06	0.68	15.46	102.3	179.3	175.6	76.8	179.0	134	86	86	84		1.001	5.630	576
1232	199.728	203.249		0.16	0.16	1.32	1.06	0.26	97	97	84	2.08	0.00	90	0.013	105	104	142.9	-0.03	0.68	15.46	102.2	179.3	175.5	76.8	179.0	134	86	86	84		1.001	5.629	576
1233	199.891	203.412		0.16	0.16	1.33	1.06	0.26	97	97	85	2.07	0.00	90	0.014	100	99	142.9	-0.01	0.60	15.54	102.0	179.1	175.5	76.8	178.8	133	86	86	85		1.001	4.980	509
1234	200.055	203.577		0.16	0.16	1.33	1.06	0.26	97	97	84	2.08	0.00	90	0.013	105	104	142.8	0.12	0.66	15.52	101.9	179.0	175.5	76.8	178.7	132	86	86	84		1.001	5.464	557
1235	200.218	203.740		0.16	0.16	1.32	1.05	0.26	97	97	85	2.08	0.00	90	0.013	104	102	142.9	-0.07	0.68	15.52	101.7	178.9	175.2	76.9	178.6	132	86	86	85		1.001	5.630	573
1236	200.382	203.904		0.16	0.16	1.32	1.06	0.26	97	97	85	2.08	0.00	90	0.016	94	93	142.9	-0.01	0.64	15.47	101.6	178.8	175.1	76.9	178.5	132	86	86	85		1.001	5.334	542
1237	200.546	204.067		0.16	0.16	1.32	1.06	0.26	97	97	85	2.06	0.00	90	0.013	105	102	142.8	0.04	0.66	15.47	101.3	178.6	174.9	77.0	178.3	132	86	86	85		1.001	5.468	555
1238	200.710	204.231		0.16	0.16	1.32	1.06	0.26	98	97	85	2.06	0.00	90	0.015	97	96	142.7	0.11	0.64	15.56	101.2	178.5	174.8	77.0	178.2	152	86	86	85		1.001	5.303	537
1239	200.873	204.394		0.16	0.16	1.31	1.04	0.26	97	97	85	2.10	0.00	97	0.013	105	103	142.5	0.22	0.68	15.48	101.1	178.3	174.7	77.0	178.1	156	87	87	85		1.001	5.628	570
1240	201.037	204.558		0.16	0.16	1.32	1.06	0.26	98	97	85	2.08	0.00	92	0.013	105	103	142.4	0.13	0.66	15.49	100.9	178.2	174.5	77.0	177.9	151	86	86	85		1.001	5.465	552
1241	201.201	204.721		0.16	0.16	1.32	1.06	0.26	98	97	85	2.08	0.00	91	0.013	104	102	142.3	0.09	0.66	15.45	100.7	178.0	174.6	77.0	177.7	147	87	87	85		1.001	5.466	551
1242	201.365	204.885		0.16	0.16	1.33	1.06	0.26	98	97	85	2.07	0.00	90	0.014	101	99	142.4	-0.09	0.64	15.50	100.5	177.9	174.3	77.1	177.6	144	86	87	85		1.001	5.304	534
1243	201.528	205.048		0.16	0.16	1.32	1.06	0.26	98	97	85	2.08	0.00	90	0.015	97	95	142.3	0.10	0.66	15.43	100.3	177.8	174.2	77.2	177.5	141	86	87	85		1.001	5.458	548
1244	201.691	205.212		0.16	0.16	1.33	1.06	0.26	98	97	85	2.08	0.00	90	0.013	104	103	142.2	0.12	0.73	15.47	100.2	177.7	174.1	77.2	177.4	139	86	87	85		1.001	6.089	611
1245	201.855	205.377		0.16	0.17	1.33	1.06	0.26	98	97	85	2.06	0.00	90	0.013	104	104	142.4	-0.18	0.64	15.51	100.0	177.5	173.9	77.3	177.3	138	87	87	85		1.001	5.302	531
1246	202.019	205.540		0.16	0.16	1.32	1.06	0.26	98	97	85	2.07	0.00	90	0.014	101	99	142.3	0.07	0.64	15.43	100.0	177.4	173.8	77.2	177.1	136	87	87	85		1.001	5.286	529
1247	202.183	205.704		0.16	0.16	1.32	1.05	0.26	98	97	84	2.08	0.00	90	0.015	97	96	142.3	-0.03	0.68	15.49	99.8	177.3	173.7	77.2	177.0	135	87	87	84		1.001	5.625	562
1248	202.347	205.868		0.16	0.16	1.32	1.05	0.26	98	97	85	2.08	0.00	90	0.014	101	99	142.4	-0.05	0.64	15.45	99.6	177.1	173.6	77.2	176.9	134	86	87	85		1.001	5.301	529
1249	202.511	206.031		0.16	0.16	1.32	1.06	0.26	98	98	85	2.06	0.00	90	0.014	101	98	142.3	0.05	0.64	15.54	99.5	177.0	173.5	77.2	176.7	133	87	87	85		1.001	5.302	528
1250	202.675	206.195		0.16	0.16	1.31	1.06	0.26	98	98	85	2.07	0.00	90	0.013	104	103	142.4	-0.05	0.68	15.52	99.5	176.9	173.3	77.1	176.6	132	87	87	85		1.001	5.626	561
1251	202.839	206.360		0.16	0.17	1.32	1.06	0.26	98	98	85	2.06	0.00	90	0.014	101	100	142.4	-0.06	0.74	15.47	99.4	176.7	173.1	77.0	176.4	131	87	87	85		1.001	6.112	608
1252	203.003	206.524		0.16	0.16	1.32	1.05	0.26	98	98	85	2.07	0.00	90	0.013	104	103	142.3	0.12	0.70	15.46	99.4	176.6	173.0	77.0	176.3	131	87	87	85		1.001	5.788	576
1253	203.166	206.687		0.16	0.16	1.32	1.06	0.26	98	98	85	2.06	0.00	90	0.014	100	98	142.3	0.02	0.65	15.49	99.3	176.5	173.0	77.0	176.3	130	87	87	85		1.001	5.440	541
1254	203.329	206.851		0.16	0.16	1.32	1.06	0.26	98	98	85	2.07	0.00	90	0.013	104	103	142.3	-0.02	0.68	15.54	99.2	176.4	173.0	76.9	176.1	129	87	87	85		1.001	5.626	559
1255	203.493	207.014		0.16	0.16	1.32	1.06	0.26	98	98	85	2.06	0.00	90	0.011	113	111	142.5	-0.15	0.66	15.42	99.0	176.2	172.6	76.9	175.9	128	87	87	85		1.001	5.484	544
1256	203.657	207.178		0.16	0.16	1.32	1.06	0.26	98	98	85	2.06	0.00	90	0.014	101	99	142.3	0.15	0.68	15.50	98.9	176.1	172.5	76.9	175.8	128	87	87	85		1.001	5.627	557
1257	203.821	207.343		0.16	0.16	1.33	1.05	0.26	98	98	85	2.08	0.00	90	0.012	109	108	142.5	-0.14	0.68	15.40	98.8	176.0	172.5	76.9	175.7	127	87	87	85		1.001	5.627	557
1258	203.985	207.506		0.16	0.16	1.32	1.06	0.26	98	98	85	2.07	0.00	90	0.014	101	98	142.3	0.12	0.64	15.54	98.7	175.8	172.3	76.9	175.5	127	87	87	85		1.001	5.305	524
1259	204.149	207.670		0.16	0.16	1.32	1.05	0.26	98	98	85	2.07	0.00	90	0.013	104	103	142.4	-0.05	0.66	15.42	98.6	175.7	172.1	76.8	175.4	127	87	87	85		1.001	5.464	540
1260	204.313	207.833		0.16	0.16	1.32	1.06	0.26	98	98	85	2.08	0.00	90	0.014	101	98	142.5	-0.17	0.64	15.47	98.5	175.6	172.1	76.9	175.3	127	87	87	85		1.001	5.301	523
1261	204.477	207.997		0.16	0.16	1.32	1.06	0.26	98	98	85	2.06	0.00	90	0.015	97	96	142.3	0.20	0.62	15.37	98.4	175.5	172.0	76.8	175.2	127	87	87	85		1.001	5.142	507
1262	204.641	208.161		0.16	0.16	1.32	1.06	0.26	98	98	85	2.07	0.00	90	0.013	104	103	142.4	-0.06	0.66	15.47	98.2	175.2	171.7	76.8	175.0	126	87	87	85		1.001	5.465	537
1263	204.805	208.326		0.16	0.16	1.32	1.06	0.26	98	98	85	2.07	0.00	90	0.014	101	100	142.4	0.01	0.64	15.55	98.1	175.2	171.7	76.8	174.9	126	87	87	85		1.001	5.301	521
1264	204.968	208.489		0.16	0.16	1.32	1.06	0.26	98	98	85	2.06	0.00	90	0.014	100	98	142.4	-0.05	0.66	15.44	97.9	175.0	171.4	76.8	174.7	126	87	87	85		1.001	5.464	535
1265	205.131	208.652		0.16	0.16	1.32	1.05	0.26	98	98	85	2.07	0.00	90	0.014	100	98	142.4	0.06	0.68	15.48	97.7	174.8	171.3	76.9	174.6	126	87	87	85		1.001	5.624	550
1266	205.295	208.816		0.16	0.16	1.32	1.05	0.26	98	98	85	2.06	0.00	90	0.014	101	99	142.4	-0.06	0.70	15.54	97.6	174.8	171.2	76.9	174.5	125	87	87	85		1.001	5.784	565
1267	205.458	208.980		0.16	0.16	1.32	1.06	0.26	98	98	85	2.06	0.00	90	0.014	100	99	142.5	-0.06	0.68	15.50	97.4	174.6	171.1	76.9	174.3	125	87	87	85		1.001	5.624	548
1268	205.623	209.144		0.16	0.16	1.32	1.06	0.26	98	98	85	2.07	0.00	90	0.014	101	99	142.3	0.16	0.66	15.44	97.2	174.5	171.0	77.0	174.2	125	87	87	85		1.001	5.460	531
1269	205.787	209.308		0.16	0.16	1.32	1.06	0.26	98	98	85	2.07	0.00	91	0.015	97	96	142.4	-0.05	0.66	15.49	97.1	174.3	170.8	77.0	174.1	147	87	87	85		1.001	5.461	531
1270	205.950	209.470		0.16	0.16	1.32	1.05	0.26	98	98	85	2.07	0.00	95	0.015	97	95	142.1	0.31	0.66	15.50	96.8	174.3	170.6	77.1	173.9	147	87	87	85		1.001	5.465	530
1271	206.114	209.633		0.16	0.16	1.31	1.05	0.26	98	98	85	2.07	0.00	92	0.016	94	92	142.3	-0.19	0.70	15.45	96.7	174.1	170.3	77.1	173.8	142	87	87	85		1.001	5.788	560
1272	206.278	209.797		0.16	0.16	1.32	1.06	0.26	98	98	85	2.07	0.00	91	0.014	101	99	142.2	0.12	0.73	15.48	96.5	173.9	170.1	77.1	173.7	138	87	87	85		1.001	6.099	589
1273	206.442	209.961		0.16	0.16	1.31	1.06	0.26	98	98	85	2.06	0.00	91	0.014	101	99	141.9	0.23	0.70	15.54	96.4	173.8	170.0	77.1	173.5	136	87	87	85		1.001	5.782	558
1274	206.605	210.125		0.16	0.16	1.32	1.06	0.26	98	98	85	2.08	0.00	91	0.015	97	96	142.0	-0.02	0.69	15.41	96.2	173.6	169.9	77.2	173.4	134	87	87	85		1.001	5.745	553
1275	206.769	210.289		0.16	0.16	1.32	1.06	0.26	98	98	85	2.07	0.00	91	0.013	104	103	142.2	-0.25	0.68	15.46	96.1	173.5	169.7	77.1	173.3	133	87	87	85		1.001	5.626	541
1276	206.933	210.452		0.16	0.16	1.32	1.05	0.26	98	98	85	2.07	0.00	91	0.012	109	106	142.0	0.18	0.72	15.51	96.0	173.3	169.6	77.1	173.1	132	87	87	85		1.001	5.949	572
1277	207.097	210.616		0.16	0.16	1.32	1.06	0.26	98	98	85	2.06	0.00	91	0.012	109	107	142.0	-0.03	0.64	15.49	95.8	173.2	169.4	77.1	173.0	130	87	87	85		1.001	5.302	509
1278	207.260	210.780		0.16	0.16	1.31	1.06	0.26	98	98	85	2.07	0.00	91	0.013	104	103	142.1	-0.01	0.72	15.44	95.7	173.0	169.3	77.0	172.8	130	87	87	85		1.001	5.946	570
1279	207.424	210.944		0.16	0.16	1.32	1.06	0.26	98	98	85	2.07	0.00	91	0.014	101	99	142.1	0.00	0.68	15.49	95.6	172.9	169.2	77.1	172.7	129	87	87	85		1.001	5.622	538
1280	207.588	211.108		0.16	0.16	1.32	1.05	0.26	98	98	85	2.08	0.00	91	0.014	101	99	142.1	-0.07	0.72	15.49	95.4	172.8	169.0	77.1	172.5	127	87	87	85		1.001	5.948	568
1281	207.752	211.272		0.16	0.16	1.31	1.06	0.26	98	98	85	2.07	0.00	91	0.014	101	99	142.1	0.00	0.70	15.46	95.4	172.6	168.9	77.0	172.4	127	87	87	85		1.001	5.785	552
1282	207.916	211.435		0.16	0.16	1.32	1.05	0.26	98	98	85	2.07	0.00	91	0.012	109	106	142.2	-0.04	0.73	15.45	95.1	172.4	168.7	77.1	172.2	126	87	87	85		1.001	6.099	581
1283	208.080	211.599		0.16	0.16	1.32	1.05	0.26	98	98	85	2.07	0.00	91	0.012	109	107	142.1	0.07	0.70	15.49	95.0	172.3	168.6	77.1	172.1	125	87	87	85		1.001	5.805	552
1284	208.243	211.762		0.16	0.16	1.32	1.06	0.26	98	98	85	2.08	0.00	91	0.012	108	106	142.0	0.06	0.69	15.52	94.9	172.2	168.5	77.0	172.0	125	87	87	85		1.001	5.736	545
1285	208.406	211.926		0.16	0.16	1.32	1.06	0.26	98	98	85	2.07	0.00	91	0.014	100	99	142.2	-0.14	0.70	15.46	94.7	172.0	168.3	77.1	171.8	124	87	87	85		1.001	5.785	549
1286	208.570	212.091		0.16	0.17	1.32	1.06	0.26	98	98	85	2.07	0.00	91	0.013	104	104	142.0	0.19	0.70	15.52	94.6	171.9	168.2	77.1	171.7	124	87	87	85		1.001	5.786	548
1287	208.733	212.254		0.16	0.16	1.32	1.05	0.26	98	98	85	2.06	0.00	91	0.012	108	106	142.0	0.04	0.72	15.50	94.5	171.8	168.0	77.0	171.5	124	87	87	85		1.001	5.945	562
1288	208.897	212.418		0.16	0.16	1.32	1.06	0.26	98	98	85	2.06	0.00	91	0.013	104	103	142.1	-0.13	0.66	15.40	94.3	171.6	167.9	77.1	171.4	123	87	87	85		1.001	5.460	516
1289	209.061	212.581		0.16	0.16	1.32	1.05	0.26	98	98	85	2.06	0.00	91	0.014	101	99	142.1	-0.05	0.68	15.45	94.1	171.5	167.8	77.1	171.2	123	87	87	85		1.001	5.621	530
1290	209.225	212.745		0.16	0.16	1.32	1.06	0.26	98	98	85	2.07	0.00	91	0.012	109	107	142.1	0.03	0.68	15.50	94.0	171.3	167.6	77.1	171.1	123	87	87	85		1.001	5.624	529
1291	209.389	212.909		0.16	0.16	1.31	1.06	0.26	98	98	85	2.08	0.00	91	0.012	109	107	142.1	-0.02	0.68	15.52	93.8	171.2	167.6	77.2	171.0	123	87	87	85		1.001	5.615	527
1292	209.553	213.074		0.16	0.17	1.32	1.06	0.26	98	98	85	2.06	0.00	91	0.014	101	100	142.2	-0.01	0.71	15.51	93.6	170.9	167.3	77.2	170.8	122	87	87	85		1.001	5.933	556

Elapsed Time	Particulate Sampling Data																	Fuel Weight, lb		Flow, gpm		Temperature Data, oF													
	Gas Meter Cubic Feet (1)	Gas Meter Cubic Feet (2)	Gas Meter Cubic Feet (amb)	Sample Rate, cfm (1)	Sample Rate, cfm (2)	Orifice dH (1)	Orifice dH (2)	Orifice dH (amb)	Meter oF (1)	Meter oF (2)	Meter oF (amb)	Meter Vac. In. Hg. (1)	Meter Vac. In. Hg. (2)	Dilution Tunnel Temp.	Dilution Tunnel dP	Pro. Rate (%) (1)	Pro. Rate (%) (2)	Scale Reading	Weight Change	Load Side Liquid Flow Rate	Boiler Side Liquid Flow Rate (optional)	Thermopile ΔT	Boiler to Heat Exch. Temp.	Heat Exch to Boiler Temp.	Inlet Load Temp.	Outlet Load Temp.	Stack	Filter (1)	Filter (2)	Ambient		Specific Heat of Inlet Water (BTU/lb-°F)	Mass Flow Rate of Inlet Water (lb/min)	Heat Output, Btu
1293	209.716	213.237		0.16	0.16	1.31	1.05	0.26	98	98	85	2.07	0.00	91	0.014	100	99	142.1	0.08	0.66	15.44	93.5	170.9	167.2	77.2	170.6	122	87	87	85		1.001	5.460	511
1294	209.880	213.401		0.16	0.16	1.32	1.06	0.26	98	98	85	2.07	0.00	91	0.014	101	99	142.2	-0.10	0.71	15.43	93.3	170.8	167.1	77.3	170.5	122	87	87	85		1.001	5.870	548
1295	210.044	213.565		0.16	0.16	1.32	1.06	0.26	99	98	85	2.07	0.00	91	0.014	100	99	142.1	0.05	0.64	15.50	93.1	170.6	166.9	77.3	170.3	122	87	87	85		1.001	5.297	494
1296	210.207	213.728		0.16	0.16	1.32	1.06	0.26	98	98	85	2.06	0.00	91	0.012	108	106	142.1	0.03	0.72	15.35	92.9	170.5	166.9	77.3	170.2	122	87	87	85		1.001	5.947	553
1297	210.371	213.892		0.16	0.16	1.32	1.06	0.26	99	98	85	2.08	0.00	91	0.012	109	107	142.2	-0.12	0.70	15.41	92.7	170.3	166.6	77.4	170.0	121	87	87	85		1.001	5.782	536
1298	210.534	214.057		0.16	0.16	1.32	1.06	0.26	99	98	85	2.06	0.00	91	0.015	96	96	142.1	0.12	0.70	15.49	92.5	170.1	166.5	77.4	169.9	121	87	87	85		1.001	5.786	536
1299	210.698	214.221		0.16	0.16	1.32	1.06	0.26	99	98	85	2.08	0.00	91	0.013	104	103	142.1	-0.01	0.68	15.49	92.4	170.0	166.4	77.4	169.8	121	87	87	85		1.001	5.621	520
1300	210.862	214.384		0.16	0.16	1.32	1.05	0.26	99	98	85	2.07	0.00	92	0.014	101	99	141.9	0.17	0.73	15.50	92.1	169.8	166.2	77.5	169.6	143	87	87	85		1.001	6.105	563
1301	211.025	214.546		0.16	0.16	1.32	1.05	0.26	99	98	85	2.07	0.00	94	0.012	108	106	141.9	0.00	0.72	15.51	92.0	169.7	166.2	77.4	169.5	141	87	87	85		1.001	5.950	548
1302	211.189	214.710		0.16	0.16	1.31	1.06	0.26	99	98	85	2.08	0.00	92	0.013	104	103	142.0	-0.08	0.66	15.46	91.8	169.5	166.0	77.5	169.3	137	87	87	85		1.001	5.482	504
1303	211.353	214.875		0.16	0.16	1.32	1.06	0.26	99	98	86	2.08	0.00	91	0.014	100	100	141.9	0.09	0.70	15.59	91.6	169.4	165.8	77.5	169.2	134	87	87	86		1.001	5.783	531
1304	211.517	215.039		0.16	0.16	1.32	1.06	0.26	99	98	86	2.06	0.00	91	0.014	100	99	141.9	0.06	0.66	15.51	91.4	169.3	165.8	77.6	169.0	132	87	87	86		1.001	5.456	499
1305	211.681	215.202		0.16	0.16	1.31	1.05	0.26	99	98	85	2.08	0.00	91	0.013	104	102	141.9	-0.06	0.70	15.44	91.3	169.1	165.6	77.6	168.9	130	87	87	85		1.001	5.842	534
1306	211.844	215.366		0.16	0.16	1.32	1.06	0.26	99	99	86	2.07	0.00	91	0.014	100	99	141.9	0.04	0.71	15.48	91.1	168.9	165.5	77.6	168.7	128	87	87	86		1.001	5.942	542
1307	212.007	215.529		0.16	0.16	1.32	1.06	0.26	99	98	85	2.06	0.00	91	0.015	96	95	141.7	0.16	0.68	15.45	90.9	168.8	165.3	77.7	168.6	127	87	87	85		1.001	5.619	512
1308	212.171	215.694		0.16	0.16	1.32	1.06	0.26	99	99	86	2.08	0.00	91	0.012	109	108	141.9	-0.14	0.72	15.44	90.8	168.7	165.2	77.6	168.4	126	87	87	86		1.001	5.946	541
1309	212.335	215.858		0.16	0.16	1.32	1.06	0.26	99	99	85	2.08	0.00	91	0.013	104	103	142.0	-0.12	0.68	15.34	90.6	168.5	165.0	77.7	168.3	125	87	87	85		1.001	5.619	510
1310	212.499	216.022		0.16	0.16	1.32	1.06	0.26	99	99	85	2.08	0.00	91	0.013	104	103	142.0	0.03	0.70	15.51	90.5	168.4	164.8	77.7	168.1	123	87	87	85		1.001	5.782	524
1311	212.663	216.186		0.16	0.16	1.32	1.05	0.26	99	99	86	2.08	0.00	91	0.013	104	103	141.9	0.08	0.70	15.47	90.4	168.2	164.9	77.7	168.0	123	87	87	86		1.001	5.792	524
1312	212.827	216.349		0.16	0.16	1.31	1.06	0.26	99	99	86	2.06	0.00	91	0.013	104	102	141.9	0.00	0.68	15.52	90.2	168.1	164.6	77.6	167.9	123	87	87	86		1.001	5.625	508
1313	212.991	216.513		0.16	0.16	1.31	1.06	0.26	99	99	86	2.08	0.00	91	0.014	100	99	141.8	0.06	0.67	15.51	90.0	167.9	164.4	77.7	167.7	122	87	87	86		1.001	5.546	500
1314	213.155	216.677		0.16	0.16	1.32	1.06	0.26	99	99	86	2.06	0.00	91	0.012	109	107	141.9	-0.05	0.69	15.40	89.9	167.8	164.4	77.7	167.6	122	87	87	86		1.001	5.754	518
1315	213.319	216.841		0.16	0.16	1.32	1.06	0.26	99	99	86	2.08	0.00	91	0.012	109	107	142.0	-0.10	0.68	15.44	89.8	167.7	164.2	77.7	167.4	122	87	87	86		1.001	5.647	507
1316	213.482	217.006		0.16	0.16	1.32	1.06	0.26	99	99	86	2.06	0.00	91	0.013	104	103	141.8	0.18	0.72	15.45	89.6	167.5	164.0	77.7	167.3	121	87	87	86		1.001	5.942	533
1317	213.646	217.169		0.16	0.16	1.32	1.06	0.26	99	99	86	2.08	0.00	91	0.014	100	98	141.9	-0.11	0.70	15.43	89.5	167.4	164.0	77.7	167.2	121	87	87	86		1.001	5.781	518
1318	213.809	217.333		0.16	0.16	1.32	1.06	0.26	99	99	85	2.07	0.00	91	0.013	104	103	141.8	0.07	0.72	15.50	89.3	167.2	163.8	77.7	167.0	121	87	87	85		1.001	5.943	531
1319	213.973	217.497		0.16	0.16	1.32	1.06	0.26	99	99	86	2.06	0.00	91	0.012	109	107	141.8	0.04	0.72	15.48	89.2	167.1	163.7	77.7	166.9	121	87	87	86		1.001	5.944	531
1320	214.136	217.661		0.16	0.16	1.32	1.06	0.26	99	99	86	2.06	0.00	91	0.012	108	107	141.8	-0.04	0.70	15.38	89.0	167.0	163.5	77.7	166.7	120	87	87	86		1.001	5.779	515
1321	214.301	217.825		0.16	0.16	1.32	1.06	0.26	99	99	86	2.07	0.00	91	0.013	105	103	141.8	0.04	0.72	15.54	89.0	166.8	163.4	77.7	166.6	120	87	87	86		1.001	5.943	529
1322	214.464	217.989		0.16	0.16	1.32	1.06	0.26	99	99	85	2.07	0.00	91	0.012	108	107	141.8	-0.03	0.64	15.51	88.8	166.7	163.3	77.6	166.4	119	87	88	85		1.001	5.295	471
1323	214.629	218.153		0.16	0.16	1.31	1.05	0.26	99	99	86	2.08	0.00	91	0.015	98	96	141.9	-0.09	0.68	15.50	88.6	166.5	163.1	77.7	166.3	119	88	87	86		1.001	5.665	503
1324	214.793	218.317		0.16	0.16	1.31	1.06	0.26	99	99	86	2.07	0.00	91	0.013	104	103	141.9	0.01	0.70	15.56	88.6	166.4	163.0	77.6	166.2	119	88	87	86		1.001	5.781	513
1325	214.956	218.481		0.16	0.16	1.32	1.06	0.26	99	99	86	2.08	0.00	91	0.013	104	103	141.9	0.02	0.68	15.46	88.4	166.3	162.8	77.6	166.0	118	87	87	86		1.001	5.622	498
1326	215.120	218.644		0.16	0.16	1.31	1.06	0.26	99	99	86	2.07	0.00	91	0.014	100	98	141.8	0.11	0.68	15.54	88.4	166.2	162.7	77.6	165.9	118	88	88	86		1.001	5.621	497
1327	215.284	218.808		0.16	0.16	1.32	1.06	0.26	99	99	86	2.08	0.00	91	0.016	94	93	142.0	-0.21	0.70	15.55	88.2	165.9	162.5	77.5	165.7	119	88	88	86		1.001	5.783	511
1328	215.447	218.973		0.16	0.17	1.32	1.05	0.26	99	99	86	2.08	0.00	91	0.014	100	100	141.9	0.10	0.70	15.51	88.2	165.8	162.4	77.5	165.6	118	88	88	86		1.001	5.782	510
1329	215.611	219.137		0.16	0.16	1.32	1.05	0.26	99	99	86	2.07	0.00	91	0.014	100	99	141.9	-0.07	0.66	15.54	88.0	165.6	162.3	77.4	165.4	118	88	87	86		1.001	5.459	481
1330	215.775	219.300		0.16	0.16	1.32	1.06	0.26	99	99	86	2.07	0.00	91	0.014	100	98	141.9	0.05	0.68	15.44	87.8	165.5	162.1	77.4	165.3	118	88	88	86		1.001	5.622	494
1331	215.939	219.464		0.16	0.16	1.31	1.05	0.26	99	99	86	2.09	0.00	93	0.015	97	96	141.9	0.01	0.68	15.48	87.8	165.4	162.0	77.4	165.2	139	88	88	86		1.001	5.619	494
1332	216.102	219.627		0.16	0.16	1.32	1.06	0.26	99	99	86	2.06	0.00	94	0.015	97	95	141.6	0.25	0.72	15.58	87.6	165.2	161.8	77.4	165.0	137	88	88	86		1.001	5.981	524
1333	216.266	219.791		0.16	0.16	1.31	1.06	0.26	99	99	86	2.08	0.00	92	0.013	104	103	141.8	-0.21	0.70	15.54	87.5	165.1	161.7	77.4	164.9	133	88	88	86		1.001	5.830	511
1334	216.430	219.956		0.16	0.16	1.31	1.05	0.26	99	99	86	2.08	0.00	92	0.014	101	100	141.7	0.08	0.68	15.55	87.3	165.0	161.7	77.4	164.7	130	88	88	86		1.001	5.618	491
1335	216.594	220.119		0.16	0.16	1.32	1.05	0.26	99	99	86	2.08	0.00	91	0.012	109	106	141.7	0.06	0.70	15.49	87.2	164.8	161.4	77.4	164.6	127	88	88	86		1.001	5.783	505
1336	216.758	220.283		0.16	0.16	1.31	1.06	0.26	99	99	86	2.07	0.00	91	0.013	104	103	141.6	0.05	0.68	15.38	87.0	164.7	161.3	77.5	164.4	125	88	88	86		1.001	5.618	489
1337	216.922	220.447		0.16	0.16	1.31	1.06	0.26	99	99	86	2.07	0.00	91	0.013	104	103	141.6	0.00	0.71	15.44	86.8	164.5	161.1	77.5	164.3	124	88	88	86		1.001	5.941	516
1338	217.085	220.611		0.16	0.16	1.32	1.06	0.26	99	99	86	2.06	0.00	91	0.013	104	103	141.8	-0.19	0.72	15.55	86.7	164.4	161.1	77.5	164.2	123	88	88	86		1.001	5.943	516
1339	217.248	220.774		0.16	0.16	1.32	1.06	0.26	99	99	86	2.07	0.00	91	0.016	93	92	141.7	0.14	0.68	15.47	86.6	164.3	161.0	77.5	164.0	122	88	88	86		1.001	5.618	487
1340	217.412	220.939		0.16	0.16	1.32	1.06	0.26	99	99	86	2.07	0.00	91	0.014	100	100	141.7	-0.05	0.73	15.50	86.4	164.1	160.8	77.5	163.9	122	88	88	86		1.001	6.102	528
1341	217.576	221.103		0.16	0.16	1.32	1.06	0.26	99	99	86	2.08	0.00	91	0.012	109	107	141.6	0.13	0.69	15.45	86.2	163.9	160.7	77.5	163.7	121	88	88	86		1.001	5.768	498
1342	217.740	221.266		0.16	0.16	1.31	1.05	0.26	99	99	86	2.06	0.00	91	0.013	104	102	141.8	-0.18	0.71	15.58	86.1	163.8	160.5	77.5	163.6	121	88	88	86		1.001	5.885	507
1343	217.903	221.430		0.16	0.16	1.32	1.05	0.26	99	99	86	2.06	0.00	91	0.014	100	99	141.7	0.04	0.73	15.42	85.9	163.7	160.4	77.5	163.4	120	88	88	86		1.001	6.084	523
1344	218.068	221.594		0.17	0.16	1.31	1.06	0.26	99	99	86	2.07	0.00	91	0.012	109	107	141.7	0.02	0.70	15.40	85.8	163.6	160.3	77.5	163.4	120	88	88	86		1.001	5.780	497
1345	218.232	221.758		0.16	0.16	1.31	1.06	0.26	99	99	86	2.06	0.00	92	0.013	104	103	141.8	-0.05	0.70	15.47	85.6	163.4	160.2	77.5	163.2	119	88	88	86		1.001	5.779	495
1346	218.395	221.923		0.16	0.16	1.32	1.06	0.26	99	99	86	2.06	0.00	91	0.015	96	96	141.6	0.20	0.70	15.46	85.4	163.2	160.0	77.6	163.0	119	88	88	86		1.001	5.780	494
1347	218.559	222.086		0.16	0.16	1.31	1.05	0.26	99	99	86	2.06	0.00	92	0.013	104	102	141.7	-0.16	0.71	15.41	85.4	163.1	159.9	77.5	162.9	118	88	88	86		1.001	5.941	508
1348	218.723	222.249		0.16	0.16	1.32	1.06	0.26	99	99	86	2.07	0.00	92	0.013	104	102	141.8	-0.08	0.66	15.43	85.1	163.0	159.8	77.7	162.8	118	88	88	86		1.001	5.454	465
1349	218.886	222.413		0.16	0.16	1.32	1.06	0.26	100	99	86	2.08	0.00	92	0.014	100	99	141.7	0.14	0.66	15.46	85.0	162.8	159.6	77.6	162.6	118	88	88	86		1.001	5.456	464
1350	219.049	222.577		0.16	0.16	1.32	1.06	0.26	99	99	86	2.08	0.00	91	0.012	108	107	141.6	0.03	0.72	15.52	84.9	162.7	159.5	77.6	162.5	118	88	88	86		1.001	5.943	505
1351	219.213	222.741		0.16	0.16	1.32	1.06	0.26	99	99	86	2.08	0.00	92	0.013	104	103	141.7	-0.04	0.69	15.53	84.8	162.6	159.4	77.6	162.4	117	88	88	86		1.001	5.775	490
1352	219.377	222.906		0.16	0.16	1.32	1.06	0.26	100	99	86	2.07	0.00	92	0.014	100	100	141.5	0.16	0.68	15.41	84.6	162.4	159.2	77.6	162.2	134	88	88	86		1.001	5.631	477
1353	219.540	223.068		0.16	0.16	1.31	1.04	0.26	100	99	86	2.09	0.00	98	0.012	108	106	141.5	0.01	0.68	15.50	84.5	162.3	159.1	77.6	162.1	144	88	88	86		1.001	5.617	475
1354	219.704	223.231		0.16	0.16	1.31	1.05	0.26	100	99	86	2.09	0.00	99	0.015	98	96	141.4	0.09	0.73	15.48	84.3	162.2	159.0	77.6	162.0	151	88	88	86		1.001	6.103	515

Elapsed Time	Particulate Sampling Data																	Fuel Weight, lb		Flow, gpm		Temperature Data, oF													
	Gas Meter Cubic Feet (1)	Gas Meter Cubic Feet (2)	Gas Meter Cubic Feet (amb)	Sample Rate, cfm (1)	Sample Rate, cfm (2)	Orifice dH (1)	Orifice dH (2)	Orifice dH (amb)	Meter oF (1)	Meter oF (2)	Meter oF (amb)	Meter Vac. In. Hg. (1)	Meter Vac. In. Hg. (2)	Dilution Tunnel Temp.	Dilution Tunnel dP	Pro. Rate (%) (1)	Pro. Rate (%) (2)	Scale Reading	Weight Change	Load Side Liquid Flow Rate	Boiler Side Liquid Flow Rate (optional)	Thermopile ΔT	Boiler to Heat Exch. Temp.	Heat Exch to Boiler Temp.	Inlet Load Temp.	Outlet Load Temp.	Stack	Filter (1)	Filter (2)	Ambient		Specific Heat of Inlet Water (BTU/lb-°F)	Mass Flow Rate of Inlet Water (lb/min)	Heat Output, Btu
1355	219.868	223.394		0.16	0.16	1.31	1.05	0.26	100	99	86	2.07	0.00	100	0.013	105	103	141.4	0.01	0.68	15.47	84.2	162.1	158.9	77.7	161.8	155	87	88	86		1.001	5.619	473
1356	220.032	223.557		0.16	0.16	1.31	1.05	0.26	100	99	86	2.07	0.00	100	0.014	101	99	141.5	-0.03	0.73	15.51	84.1	161.9	158.7	77.6	161.7	158	86	87	86		1.001	6.103	514
1357	220.195	223.722		0.16	0.17	1.32	1.05	0.26	100	99	86	2.07	0.00	101	0.015	97	97	141.1	0.32	0.71	15.54	83.9	161.8	158.6	77.6	161.6	160	85	86	86		1.001	5.940	499
1358	220.359	223.885		0.16	0.16	1.32	1.05	0.26	100	99	86	2.08	0.00	101	0.014	101	99	141.1	0.05	0.68	15.48	83.8	161.7	158.5	77.6	161.4	162	85	86	86		1.001	5.616	471
1359	220.523	224.048		0.16	0.16	1.32	1.05	0.26	100	99	86	2.07	0.00	102	0.014	101	99	141.0	0.13	0.71	15.49	83.7	161.5	158.4	77.6	161.3	165	86	87	86		1.001	5.938	498
1360	220.686	224.211		0.16	0.16	1.32	1.06	0.26	100	99	86	2.08	0.00	102	0.014	101	99	140.8	0.12	0.68	15.46	83.6	161.5	158.3	77.6	161.2	168	86	87	86		1.001	5.617	470
1361	220.850	224.375		0.16	0.16	1.32	1.05	0.26	100	99	86	2.08	0.00	103	0.013	105	104	140.6	0.20	0.73	15.46	83.5	161.3	158.2	77.6	161.1	172	86	87	86		1.001	6.101	510
1362	221.013	224.539		0.16	0.16	1.32	1.06	0.26	100	99	86	2.08	0.00	103	0.013	105	104	140.2	0.40	0.68	15.45	83.5	161.3	158.2	77.6	161.1	176	87	87	86		1.001	5.615	469
1363	221.177	224.703		0.16	0.16	1.32	1.06	0.26	100	99	86	2.07	0.00	105	0.014	102	100	139.9	0.33	0.65	15.47	83.5	161.3	158.1	77.5	161.0	181	87	88	86		1.001	5.433	454
1364	221.341	224.866		0.16	0.16	1.32	1.05	0.26	100	99	86	2.07	0.00	106	0.013	105	103	139.3	0.66	0.64	15.55	83.4	161.3	158.1	77.6	161.0	188	88	88	86		1.001	5.292	442
1365	221.504	225.029		0.16	0.16	1.32	1.05	0.26	100	99	86	2.08	0.00	107	0.014	101	100	138.8	0.48	0.70	15.57	83.6	161.6	158.3	77.6	161.2	193	88	88	86		1.001	5.780	484
1366	221.667	225.191		0.16	0.16	1.31	1.05	0.26	100	99	86	2.08	0.00	108	0.012	109	107	138.4	0.42	0.68	15.60	84.1	162.1	158.8	77.6	161.7	199	88	89	86		1.001	5.617	473
1367	221.830	225.354		0.16	0.16	1.31	1.04	0.26	100	99	86	2.10	0.00	110	0.014	101	100	137.5	0.86	0.70	15.55	84.6	162.6	159.3	77.6	162.3	210	89	89	86		1.001	5.779	490
1368	221.994	225.515		0.16	0.16	1.31	1.03	0.26	100	100	86	2.11	0.00	113	0.013	106	103	136.8	0.71	0.68	15.52	84.9	162.9	159.5	77.6	162.5	220	89	89	86		1.001	5.615	477
1369	222.156	225.676		0.16	0.16	1.31	1.03	0.26	100	100	86	2.11	0.00	115	0.013	105	103	136.4	0.37	0.70	15.47	85.4	163.5	160.2	77.6	163.1	226	89	89	86		1.001	5.778	494
1370	222.319	225.836		0.16	0.16	1.32	1.02	0.26	100	99	86	2.12	0.00	116	0.014	102	99	135.7	0.75	0.70	15.50	86.2	164.3	160.9	77.6	163.8	231	88	89	86		1.001	5.778	498
1371	222.482	225.997		0.16	0.16	1.31	1.02	0.26	100	100	86	2.13	0.00	118	0.014	102	99	135.0	0.67	0.66	15.42	87.0	165.1	161.7	77.7	164.7	236	88	88	86		1.001	5.446	474
1372	222.644	226.156		0.16	0.16	1.31	1.01	0.26	100	100	86	2.13	0.00	119	0.014	102	98	134.4	0.58	0.70	15.48	87.7	165.8	162.4	77.7	165.4	241	87	88	86		1.001	5.810	510
1373	222.806	226.314		0.16	0.16	1.31	0.99	0.26	100	100	86	2.14	0.00	121	0.015	98	94	133.6	0.87	0.72	15.49	88.3	166.4	163.0	77.7	166.0	249	87	88	86		1.001	5.955	526
1374	222.968	226.472		0.16	0.16	1.30	0.97	0.26	100	100	86	2.13	0.00	123	0.015	98	95	132.5	1.03	0.71	15.51	89.1	167.3	163.8	77.7	166.8	254	87	88	86		1.001	5.940	530
1375	223.130	226.628		0.16	0.16	1.30	0.97	0.26	100	100	86	2.14	0.00	124	0.014	102	97	132.0	0.51	0.68	15.43	90.2	168.5	164.9	77.7	168.0	257	87	87	86		1.001	5.617	507
1376	223.291	226.784		0.16	0.16	1.30	0.95	0.26	100	100	86	2.14	0.00	124	0.016	95	91	131.1	0.90	0.69	15.46	91.1	169.6	165.9	77.8	168.9	259	87	87	86		1.001	5.775	527
1377	223.453	226.946		0.16	0.16	1.30	1.05	0.26	100	100	86	2.16	0.00	125	0.015	99	97	130.4	0.75	0.70	15.40	92.2	170.6	166.9	77.8	170.0	261	87	88	86		1.001	5.777	533
1378	223.614	227.108		0.16	0.16	1.30	1.04	0.26	100	100	86	2.15	0.00	125	0.014	101	101	129.5	0.83	0.66	15.52	93.4	171.8	168.1	77.8	171.2	263	88	88	86		1.001	5.452	510
1379	223.776	227.270		0.16	0.16	1.30	1.04	0.26	100	100	86	2.17	0.00	126	0.016	96	94	128.7	0.80	0.70	15.50	94.3	172.7	169.0	77.9	172.2	264	88	89	86		1.001	5.777	546
1380	223.937	227.430		0.16	0.16	1.29	1.02	0.26	100	100	86	2.16	0.00	127	0.014	102	100	127.8	0.94	0.70	15.50	95.4	173.8	170.1	77.9	173.3	268	89	88	86		1.001	5.777	552
1381	224.098	227.590		0.16	0.16	1.29	1.02	0.26	100	100	86	2.17	0.00	128	0.015	98	96	127.0	0.81	0.69	15.50	96.2	174.7	170.9	77.9	174.1	271	89	87	86		1.001	5.758	555
1382	224.259	227.750		0.16	0.16	1.29	1.00	0.26	100	100	86	2.19	0.00	128	0.015	98	96	126.0	1.03	0.75	15.44	97.3	175.8	172.0	77.9	175.2	273	88	87	86		1.001	6.261	610
1383	224.420	227.907		0.16	0.16	1.29	0.99	0.26	100	100	86	2.19	0.00	129	0.015	98	94	125.1	0.85	0.67	15.52	98.5	177.0	173.2	77.9	176.4	276	87	86	86		1.001	5.573	550
1384	224.581	228.064		0.16	0.16	1.28	0.98	0.26	100	100	86	2.19	0.00	129	0.015	98	94	124.3	0.83	0.69	15.54	99.7	178.3	174.4	77.9	177.7	277	87	85	86		1.001	5.700	569
1385	224.741	228.220		0.16	0.16	1.28	0.96	0.26	100	100	86	2.18	0.00	129	0.015	98	94	123.4	0.87	0.70	15.51	100.9	179.5	175.5	77.9	178.8	277	87	86	86		1.001	5.776	584
1386	224.902	228.382		0.16	0.16	1.27	1.06	0.26	100	100	86	2.20	0.00	129	0.014	102	101	122.5	0.87	0.71	15.42	102.1	180.6	176.6	77.9	180.0	278	87	87	86		1.001	5.936	607
1387	225.062	228.545		0.16	0.16	1.27	1.06	0.26	100	100	86	2.20	0.00	129	0.014	101	102	122.0	0.49	0.66	15.40	103.1	181.6	177.6	78.0	181.0	280	88	87	86		1.001	5.450	562
1388	225.223	228.710		0.16	0.17	1.29	1.16	0.26	100	100	86	2.15	0.00	120	0.013	105	106	121.1	0.93	0.71	15.52	104.3	182.8	178.7	77.9	182.2	267	87	85	86		1.001	5.936	620
1389	225.385	228.874		0.16	0.16	1.28	1.06	0.26	100	100	86	2.17	0.00	107	0.012	109	108	120.7	0.44	0.73	15.45	105.3	183.7	179.6	77.9	183.2	247	88	86	86		1.001	6.094	642
1390	225.546	229.038		0.16	0.16	1.27	1.05	0.26	100	100	86	2.16	0.00	102	0.013	103	104	120.3	0.35	0.68	15.39	105.8	184.2	180.1	77.9	183.7	237	87	86	86		1.001	5.613	594
1391	225.708	229.201		0.16	0.16	1.27	1.06	0.26	100	100	86	2.17	0.00	100	0.013	104	103	119.9	0.43	0.68	15.43	106.1	184.4	180.4	77.9	184.0	231	87	86	86		1.001	5.612	596
1392	225.869	229.364		0.16	0.16	1.27	1.02	0.26	100	100	86	2.18	0.00	100	0.014	99	99	119.8	0.11	0.73	15.52	106.2	184.5	180.5	77.9	184.2	222	86	86	86		1.001	6.067	645
1393	226.034	229.526		0.16	0.16	1.30	1.03	0.26	100	100	86	2.18	0.00	99	0.015	98	95	119.5	0.23	0.73	15.46	106.4	184.6	180.6	77.9	184.3	214	86	86	86		1.001	6.028	642
1394	226.197	229.688		0.16	0.16	1.30	1.03	0.26	100	100	86	2.18	0.00	98	0.014	100	98	119.3	0.24	0.69	15.48	106.5	184.8	180.7	77.9	184.4	209	86	86	86		1.001	5.774	616
1395	226.360	229.850		0.16	0.16	1.30	1.03	0.26	100	100	86	2.19	0.00	98	0.014	100	98	119.1	0.22	0.64	15.52	106.6	184.8	180.8	77.9	184.5	205	87	87	86		1.001	5.288	564
1396	226.522	230.012		0.16	0.16	1.30	1.04	0.26	100	100	86	2.18	0.00	97	0.014	100	98	119.0	0.06	0.69	15.47	106.8	185.0	180.9	77.9	184.7	202	87	87	86		1.001	5.772	617
1397	226.685	230.175		0.16	0.16	1.30	1.05	0.26	100	100	86	2.18	0.00	96	0.014	100	99	119.0	-0.03	0.71	15.50	106.8	185.1	181.0	77.9	184.7	200	87	87	86		1.001	5.936	635
1398	226.848	230.339		0.16	0.16	1.30	1.05	0.26	100	100	86	2.19	0.00	95	0.014	100	99	118.8	0.23	0.68	15.45	106.9	185.1	181.1	77.9	184.8	199	88	87	86		1.001	5.614	601
1399	227.011	230.503		0.16	0.16	1.31	1.06	0.26	100	100	87	2.17	0.00	94	0.015	97	96	118.8	0.00	0.73	15.52	107.0	185.2	181.1	77.9	184.9	197	88	88	87		1.001	6.097	653
1400	227.174	230.666		0.16	0.16	1.30	1.05	0.26	100	100	87	2.18	0.00	94	0.015	97	95	118.6	0.18	0.74	15.35	107.0	185.2	181.2	77.9	184.9	195	88	88	87		1.001	6.112	655
1401	227.337	230.831		0.16	0.16	1.31	1.05	0.26	100	100	86	2.17	0.00	94	0.015	97	96	118.6	0.04	0.64	15.56	107.0	185.2	181.4	77.9	184.9	193	87	87	86		1.001	5.287	566
1402	227.500	230.995		0.16	0.16	1.30	1.06	0.26	100	100	86	2.18	0.00	94	0.014	100	99	118.4	0.15	0.42	15.49	107.0	185.2	183.3	77.9	184.9	191	85	86	86		1.001	3.515	376
1403	227.663	231.159		0.16	0.16	1.30	1.06	0.26	100	100	86	2.18	0.00	94	0.014	100	99	118.5	-0.06	0.68	15.44	107.1	185.2	181.7	77.9	185.0	189	84	84	86		1.001	5.631	604
1404	227.826	231.324		0.16	0.17	1.30	1.06	0.26	100	100	86	2.17	0.00	94	0.013	104	103	118.4	0.07	0.62	15.52	107.0	185.2	181.4	78.0	185.0	186	84	83	86		1.001	5.129	550
1405	227.990	231.488		0.16	0.16	1.30	1.06	0.26	100	100	86	2.18	0.00	94	0.014	101	99	118.5	-0.03	0.68	15.47	107.0	185.3	181.4	78.0	185.0	184	84	84	86		1.001	5.613	601
1406	228.153	231.652		0.16	0.16	1.30	1.05	0.26	100	100	86	2.18	0.00	94	0.015	97	96	118.4	0.03	0.68	15.48	107.1	185.3	181.5	78.0	185.1	182	84	84	86		1.001	5.612	602
1407	228.316	231.816		0.16	0.16	1.30	1.06	0.26	100	100	86	2.18	0.00	93	0.014	100	99	118.5	-0.03	0.68	15.48	107.1	185.4	181.5	78.0	185.1	180	85	85	86		1.001	5.613	602
1408	228.480	231.979		0.16	0.16	1.30	1.06	0.26	100	100	86	2.18	0.00	93	0.015	97	95	118.3	0.17	0.62	15.49	107.1	185.4	181.6	78.0	185.1	178	85	85	86		1.001	5.129	550
1409	228.643	232.144		0.16	0.16	1.30	1.06	0.26	101	100	86	2.17	0.00	93	0.014	100	100	118.4	-0.11	0.60	15.49	107.1	185.3	181.8	78.0	185.1	177	86	85	86		1.001	4.969	533
1410	228.806	232.308		0.16	0.16	1.30	1.06	0.26	101	100	86	2.17	0.00	93	0.015	96	96	118.4	0.03	0.60	15.50	107.1	185.4	181.8	78.0	185.1	175	86	86	86		1.001	4.975	534
1411	228.969	232.473		0.16	0.17	1.30	1.06	0.26	101	100	86	2.19	0.00	93	0.014	100	100	118.2	0.19	0.60	15.52	107.0	185.3	181.8	78.0	185.0	173	86	86	86		1.001	4.966	532
1412	229.132	232.637		0.16	0.16	1.30	1.05	0.26	101	100	86	2.17	0.00	93	0.014	100	99	118.2	-0.05	0.64	15.54	107.0	185.3	181.8	78.1	185.0	172	86	86	86		1.001	5.288	566
1413	229.295	232.801		0.16	0.16	1.30	1.06	0.26	101	100	86	2.18	0.00	93	0.013	103	103	118.2	0.02	0.64	15.43	106.9	185.2	181.7	78.0	185.0	170	87	86	86		1.001	5.287	566
1414	229.458	232.965		0.16	0.16	1.31	1.06	0.26	101	100	86	2.18	0.00	93	0.014	100	99	118.0	0.21	0.60	15.49	106.9	185.2	181.8	78.1	185.0	168	87	87	86		1.001	4.965	531
1415	229.621	233.129		0.16	0.16	1.31	1.06	0.26	101	100	86	2.18	0.00	93	0.014	100	99	118.1	-0.14	0.62	15.48	106.9	185.2	181.8	78.1	185.0	167	87	87	86		1.001	5.125	548
1416	229.784	233.293		0.16	0.16	1.30	1.06	0.26	101	100	86	2.17	0.00	93	0.014	100	99	118.1	0.03	0.60	15.50	106.8	185.2	181.7	78.1	185.0	166	87	87	86		1.001	4.962	531

Elapsed Time	Particulate Sampling Data																	Fuel Weight, lb		Flow, gpm		Temperature Data, oF													
	Gas Meter Cubic Feet (1)	Gas Meter Cubic Feet (2)	Gas Meter Cubic Feet (amb)	Sample Rate, cfm (1)	Sample Rate, cfm (2)	Orifice dH (1)	Orifice dH (2)	Orifice dH (amb)	Meter oF (1)	Meter oF (2)	Meter oF (amb)	Meter Vac. In. Hg. (1)	Meter Vac. In. Hg. (2)	Dilution Tunnel Temp.	Dilution Tunnel dP	Pro. Rate (%) (1)	Pro. Rate (%) (2)	Scale Reading	Weight Change	Load Side Liquid Flow Rate	Boiler Side Liquid Flow Rate (optional)	Thermopile ΔT	Boiler to Heat Exch. Temp.	Heat Exch to Boiler Temp.	Inlet Load Temp.	Outlet Load Temp.	Stack	Filter (1)	Filter (2)	Ambient		Specific Heat of Inlet Water (BTU/lb-°F)	Mass Flow Rate of Inlet Water (lb/min)	Heat Output, Btu
1417	229.947	233.459		0.16	0.17	1.30	1.06	0.26	101	100	86	2.19	0.00	93	0.014	100	100	118.2	-0.13	0.64	15.51	106.7	185.1	181.7	78.2	184.9	164	87	87	86		1.001	5.288	565
1418	230.111	233.623		0.16	0.16	1.30	1.06	0.26	101	100	86	2.17	0.00	93	0.014	100	99	118.2	0.04	0.64	15.55	106.7	185.1	181.6	78.1	184.9	163	87	87	86		1.001	5.290	565
1419	230.274	233.787		0.16	0.16	1.30	1.06	0.26	101	100	86	2.18	0.00	93	0.014	100	99	118.2	0.02	0.62	15.49	106.7	185.1	181.7	78.2	184.9	161	87	87	86		1.001	5.125	548
1420	230.437	233.951		0.16	0.16	1.30	1.06	0.26	101	100	87	2.19	0.00	93	0.013	103	103	118.1	0.08	0.61	15.55	106.6	185.1	181.6	78.2	184.8	160	87	87	87		1.001	5.106	545
1421	230.600	234.116		0.16	0.17	1.30	1.07	0.26	101	100	86	2.17	0.00	93	0.012	108	108	118.0	0.05	0.64	15.52	106.4	184.9	181.5	78.3	184.7	159	88	87	86		1.001	5.290	564
1422	230.763	234.280		0.16	0.16	1.30	1.06	0.26	101	100	87	2.18	0.00	93	0.015	96	96	118.1	-0.02	0.62	15.59	106.5	184.9	181.5	78.2	184.7	158	88	87	87		1.001	5.129	547
1423	230.927	234.444		0.16	0.16	1.30	1.06	0.26	101	100	86	2.18	0.00	93	0.013	104	103	118.2	-0.14	0.60	15.49	106.4	184.9	181.4	78.2	184.6	157	88	87	86		1.001	4.965	529
1424	231.090	234.610		0.16	0.17	1.30	1.06	0.26	101	100	86	2.19	0.00	93	0.013	103	104	118.1	0.10	0.60	15.50	106.3	184.8	181.4	78.2	184.6	155	88	88	86		1.001	4.964	528
1425	231.253	234.774		0.16	0.16	1.30	1.06	0.26	101	100	86	2.17	0.00	93	0.014	100	99	118.2	-0.10	0.58	15.55	106.3	184.8	181.3	78.3	184.5	155	88	88	86		1.001	4.801	511
1426	231.416	234.939		0.16	0.16	1.30	1.06	0.26	101	100	86	2.17	0.00	92	0.014	100	100	118.3	-0.05	0.60	15.44	106.2	184.7	181.3	78.3	184.5	154	88	88	86		1.001	4.965	528
1427	231.579	235.103		0.16	0.16	1.31	1.06	0.26	101	100	87	2.17	0.00	92	0.013	103	103	118.1	0.13	0.62	15.60	106.0	184.6	181.2	78.4	184.4	153	88	88	87		1.001	5.127	544
1428	231.741	235.267		0.16	0.16	1.31	1.07	0.26	101	100	86	2.17	0.00	92	0.012	107	107	118.3	-0.17	0.60	15.49	106.0	184.6	181.2	78.3	184.3	152	88	88	86		1.001	4.965	527
1429	231.905	235.432		0.16	0.16	1.31	1.07	0.26	101	100	86	2.18	0.00	92	0.013	104	103	118.1	0.24	0.64	15.47	105.9	184.5	181.0	78.3	184.3	151	88	88	86		1.001	5.288	561
1430	232.068	235.596		0.16	0.16	1.30	1.07	0.26	101	100	86	2.19	0.00	92	0.014	100	99	118.0	0.06	0.60	15.53	105.8	184.5	181.0	78.4	184.2	150	87	87	86		1.001	4.966	526
1431	232.231	235.762		0.16	0.17	1.30	1.07	0.26	101	100	86	2.17	0.00	92	0.012	108	108	118.2	-0.16	0.61	15.60	105.7	184.4	181.0	78.4	184.1	150	85	85	86		1.001	5.035	533
1432	232.394	235.927		0.16	0.16	1.30	1.07	0.26	101	100	86	2.18	0.00	92	0.013	103	103	118.3	-0.14	0.63	15.54	105.7	184.3	180.9	78.4	184.1	149	84	84	86		1.001	5.244	555
1433	232.558	236.091		0.16	0.16	1.30	1.07	0.26	101	100	86	2.18	0.00	92	0.013	104	103	118.3	0.02	0.62	15.47	105.6	184.2	180.8	78.4	184.0	148	83	84	86		1.001	5.127	542
1434	232.721	236.256		0.16	0.16	1.30	1.06	0.26	101	100	87	2.19	0.00	92	0.014	100	100	118.0	0.24	0.60	15.51	105.5	184.1	180.7	78.4	183.9	147	83	84	87		1.001	4.965	524
1435	232.885	236.420		0.16	0.16	1.30	1.07	0.26	101	100	86	2.18	0.00	92	0.012	108	107	118.1	-0.09	0.60	15.51	105.4	184.1	180.6	78.4	183.8	147	84	84	86		1.001	4.964	524
1436	233.048	236.585		0.16	0.17	1.30	1.07	0.26	101	100	86	2.19	0.00	92	0.012	108	107	118.1	-0.01	0.62	15.54	105.2	183.9	180.5	78.4	183.7	146	84	85	86		1.001	5.127	540
1437	233.211	236.750		0.16	0.16	1.30	1.07	0.26	101	100	87	2.18	0.00	92	0.014	100	100	118.3	-0.20	0.62	15.43	105.2	183.9	180.5	78.5	183.6	145	85	85	87		1.001	5.124	540
1438	233.374	236.914		0.16	0.16	1.31	1.07	0.26	101	101	86	2.19	0.00	92	0.014	100	99	118.1	0.29	0.62	15.42	105.1	183.8	180.4	78.5	183.6	145	85	85	86		1.001	5.125	539
1439	233.538	237.080		0.16	0.17	1.30	1.07	0.26	101	101	87	2.17	0.00	92	0.014	100	100	118.1	-0.02	0.60	15.56	105.1	183.7	180.3	78.4	183.5	144	86	86	87		1.001	4.963	522
1440	233.701	237.244		0.16	0.16	1.31	1.07	0.26	101	100	87	2.18	0.00	92	0.012	108	107	118.3	-0.23	0.60	15.43	104.9	183.6	180.2	78.5	183.4	144	86	86	87		1.001	4.963	521
1441	233.863	237.409		0.16	0.16	1.31	1.06	0.26	101	100	87	2.18	0.00	92	0.015	96	96	118.2	0.08	0.60	15.44	104.9	183.6	180.2	78.5	183.3	143	86	86	87		1.001	4.974	522
1442	234.026	237.573		0.16	0.16	1.31	1.06	0.26	101	100	86	2.19	0.00	92	0.013	103	103	118.1	0.16	0.60	15.49	104.7	183.4	180.0	78.5	183.2	143	86	86	86		1.001	4.990	523
1443	234.190	237.738		0.16	0.16	1.30	1.07	0.26	101	100	86	2.17	0.00	92	0.015	97	96	118.3	-0.21	0.62	15.51	104.6	183.3	180.0	78.5	183.1	142	86	86	86		1.001	5.126	537
1444	234.353	237.903		0.16	0.16	1.31	1.07	0.26	101	100	86	2.17	0.00	92	0.013	103	103	118.2	0.03	0.62	15.43	104.5	183.3	179.9	78.5	183.0	142	86	87	86		1.001	5.126	536
1445	234.516	238.067		0.16	0.16	1.31	1.07	0.26	101	101	86	2.18	0.00	92	0.013	103	102	118.2	0.01	0.64	15.54	104.4	183.2	179.8	78.5	182.9	141	87	87	86		1.001	5.289	553
1446	234.680	238.232		0.16	0.16	1.30	1.07	0.26	101	100	87	2.17	0.00	92	0.012	108	107	118.2	0.01	0.60	15.47	104.3	183.1	179.7	78.5	182.8	140	86	86	87		1.001	4.964	518
1447	234.843	238.398		0.16	0.17	1.30	1.07	0.26	101	101	87	2.19	0.00	92	0.013	103	104	118.2	0.05	0.62	15.47	104.1	182.9	179.6	78.5	182.7	140	85	85	87		1.001	5.125	534
1448	235.006	238.562		0.16	0.16	1.30	1.07	0.26	101	101	86	2.17	0.00	92	0.013	103	102	118.2	-0.03	0.60	15.53	104.0	182.8	179.6	78.6	182.6	139	85	84	86		1.001	4.963	517
1449	235.170	238.727		0.16	0.16	1.30	1.06	0.26	101	101	87	2.18	0.00	92	0.014	100	99	118.1	0.07	0.62	15.53	103.9	182.7	179.3	78.5	182.5	139	84	83	87		1.001	5.125	533
1450	235.333	238.891		0.16	0.16	1.30	1.07	0.26	101	101	86	2.18	0.00	92	0.014	100	99	118.4	-0.26	0.60	15.45	103.8	182.7	179.3	78.6	182.4	138	84	83	86		1.001	4.963	516
1451	235.496	239.056		0.16	0.17	1.31	1.07	0.26	101	101	86	2.18	0.00	92	0.013	103	103	118.2	0.20	0.60	15.44	103.7	182.5	179.2	78.6	182.3	138	85	84	86		1.001	4.966	516
1452	235.660	239.221		0.16	0.16	1.30	1.07	0.26	101	101	87	2.17	0.00	92	0.014	100	99	118.2	-0.04	0.64	15.46	103.6	182.4	179.0	78.6	182.2	137	85	84	87		1.001	5.286	548
1453	235.823	239.385		0.16	0.16	1.31	1.07	0.26	101	101	87	2.17	0.00	92	0.014	100	99	118.3	-0.08	0.63	15.55	103.5	182.3	179.0	78.6	182.1	137	85	85	87		1.001	5.256	545
1454	235.986	239.551		0.16	0.17	1.31	1.07	0.26	101	101	87	2.17	0.00	92	0.012	108	108	118.2	0.10	0.60	15.51	103.4	182.2	178.9	78.6	182.0	136	86	85	87		1.001	4.981	515
1455	236.149	239.716		0.16	0.17	1.31	1.07	0.26	101	101	87	2.19	0.00	92	0.014	100	99	118.1	0.09	0.60	15.45	103.3	182.1	178.7	78.6	181.9	136	86	85	87		1.001	4.961	513
1456	236.312	239.881		0.16	0.16	1.31	1.07	0.26	101	101	86	2.17	0.00	92	0.013	103	103	118.2	-0.10	0.62	15.46	103.2	182.0	178.7	78.6	181.8	135	86	86	86		1.001	5.123	529
1457	236.476	240.045		0.16	0.16	1.31	1.06	0.26	101	101	87	2.18	0.00	92	0.012	108	107	118.1	0.13	0.60	15.46	103.1	181.9	178.6	78.6	181.7	157	86	86	87		1.001	4.964	512
1458	236.637	240.197		0.16	0.15	1.29	0.89	0.26	101	101	86	2.23	0.00	98	0.013	103	95	117.9	0.21	0.60	15.51	103.0	181.8	178.5	78.6	181.6	158	87	86	86		1.001	4.965	512
1459	236.800	240.358		0.16	0.16	1.31	1.05	0.26	101	101	87	2.17	0.00	94	0.013	104	101	117.8	0.08	0.62	15.49	102.8	181.6	178.3	78.6	181.4	153	87	86	87		1.001	5.126	527
1460	236.964	240.521		0.16	0.16	1.31	1.06	0.26	101	101	87	2.16	0.00	92	0.013	104	102	117.8	-0.01	0.66	15.50	102.7	181.5	178.2	78.6	181.3	149	87	86	87		1.001	5.450	560
1461	237.127	240.685		0.16	0.16	1.31	1.06	0.26	101	101	87	2.17	0.00	92	0.012	108	107	117.7	0.11	0.62	15.47	102.6	181.4	178.1	78.6	181.2	146	87	87	87		1.001	5.129	527
1462	237.291	240.850		0.16	0.16	1.31	1.06	0.26	101	101	87	2.17	0.00	92	0.013	104	103	117.7	0.03	0.62	15.46	102.5	181.3	178.0	78.6	181.1	144	87	87	87		1.001	5.123	526
1463	237.455	241.014		0.16	0.16	1.30	1.07	0.26	101	101	87	2.16	0.00	92	0.014	100	99	117.7	0.01	0.61	15.40	102.5	181.2	177.9	78.5	181.0	143	87	87	87		1.001	5.056	519
1464	237.618	241.180		0.16	0.17	1.31	1.06	0.26	101	101	87	2.16	0.00	92	0.014	100	100	117.5	0.11	0.62	15.49	102.3	181.1	177.8	78.6	180.8	141	87	87	87		1.001	5.125	525
1465	237.782	241.344		0.16	0.16	1.31	1.07	0.26	101	101	87	2.17	0.00	92	0.014	100	99	117.7	-0.11	0.62	15.47	102.3	181.0	177.7	78.5	180.8	140	87	87	87		1.001	5.124	525
1466	237.946	241.508		0.16	0.16	1.31	1.06	0.26	101	101	86	2.17	0.00	92	0.011	113	111	117.7	-0.06	0.64	15.46	102.2	180.9	177.5	78.4	180.6	139	87	87	86		1.001	5.286	541
1467	238.109	241.673		0.16	0.16	1.31	1.07	0.26	101	101	87	2.17	0.00	92	0.013	103	103	117.6	0.12	0.62	15.46	102.2	180.7	177.4	78.4	180.5	137	87	87	87		1.001	5.124	524
1468	238.272	241.837		0.16	0.16	1.31	1.07	0.26	101	101	86	2.16	0.00	92	0.014	100	99	117.6	-0.03	0.62	15.49	102.1	180.6	177.3	78.3	180.4	136	88	87	86		1.001	5.124	524
1469	238.436	242.002		0.16	0.17	1.31	1.07	0.26	101	101	86	2.15	0.00	92	0.014	100	99	117.7	-0.09	0.62	15.56	102.0	180.5	177.2	78.3	180.3	136	88	87	86		1.001	5.126	524
1470	238.599	242.166		0.16	0.16	1.31	1.07	0.26	101	101	87	2.16	0.00	92	0.012	108	107	117.7	0.03	0.64	15.46	101.9	180.4	177.1	78.3	180.2	135	88	87	87		1.001	5.285	539
1471	238.762	242.332		0.16	0.17	1.31	1.06	0.26	101	101	86	2.15	0.00	92	0.013	103	104	117.9	-0.16	0.58	15.46	101.8	180.3	177.0	78.3	180.1	134	88	87	86		1.001	4.805	490
1472	238.927	242.497		0.16	0.17	1.31	1.07	0.26	101	101	87	2.16	0.00	92	0.014	101	99	117.7	0.18	0.64	15.55	101.7	180.1	176.8	78.2	179.9	134	88	88	87		1.001	5.290	538
1473	239.090	242.662		0.16	0.16	1.31	1.07	0.26	101	101	87	2.17	0.00	92	0.013	103	103	117.9	-0.27	0.61	15.48	101.6	180.0	176.7	78.2	179.8	133	88	88	87		1.001	5.067	516
1474	239.254	242.826		0.16	0.16	1.31	1.07	0.26	101	101	87	2.17	0.00	92	0.013	104	102	117.7	0.23	0.62	15.48	101.5	180.0	176.7	78.3	179.7	132	88	88	87		1.001	5.128	521
1475	239.418	242.991		0.16	0.17	1.30	1.07	0.26	101	101	87	2.17	0.00	92	0.014	100	99	117.7	0.01	0.56	15.47	101.3	179.8	176.6	78.3	179.6	132	88	88	87		1.001	4.641	471
1476	239.581	243.155		0.16	0.16	1.31	1.07	0.26	101	101	87	2.17	0.00	92	0.014	100	99	117.7	0.04	0.58	15.46	101.3	179.7	176.4	78.2	179.5	131	88	88	87		1.001	4.800	487
1477	239.745	243.320		0.16	0.16	1.31	1.07	0.26	101	101	87	2.17	0.00	92	0.012	108	107	117.6	0.06	0.64	15.50	101.1	179.6	176.3	78.2	179.3	131	88	88	87		1.001	5.285	535
1478	239.909	243.485		0.16	0.17	1.31	1.07	0.26	101	101	87	2.16	0.00	92	0.013	104	103	117.7	-0.11	0.64	15.54	101.0	179.5	175.8	78.2	179.2	131	87	87	87		1.001	5.287	534

Elapsed Time	Particulate Sampling Data																	Fuel Weight, lb		Flow, gpm		Temperature Data, oF													
	Gas Meter Cubic Feet (1)	Gas Meter Cubic Feet (2)	Gas Meter Cubic Feet (amb)	Sample Rate, cfm (1)	Sample Rate, cfm (2)	Orifice dH (1)	Orifice dH (2)	Orifice dH (amb)	Meter oF (1)	Meter oF (2)	Meter oF (amb)	Meter Vac. In. Hg. (1)	Meter Vac. In. Hg. (2)	Dilution Tunnel Temp.	Dilution Tunnel dP	Pro. Rate (%) (1)	Pro. Rate (%) (2)	Scale Reading	Weight Change	Load Side Liquid Flow Rate	Boiler Side Liquid Flow Rate (optional)	Thermopile ΔT	Boiler to Heat Exch. Temp.	Heat Exch to Boiler Temp.	Inlet Load Temp.	Outlet Load Temp.	Stack	Filter (1)	Filter (2)	Ambient		Specific Heat of Inlet Water (BTU/lb-°F)	Mass Flow Rate of Inlet Water (lb/min)	Heat Output, Btu
1479	240.072	243.651		0.16	0.17	1.32	1.07	0.26	101	101	87	2.16	0.00	92	0.014	100	100	117.9	-0.13	0.66	15.52	100.8	179.3	175.7	78.3	179.1	130	86	84	87		1.001	5.450	550
1480	240.235	243.816		0.16	0.16	1.31	1.07	0.26	101	101	87	2.17	0.00	92	0.012	108	107	117.8	0.05	0.68	15.50	100.8	179.2	175.6	78.2	179.0	129	84	82	87		1.001	5.609	566
1481	240.399	243.981		0.16	0.16	1.32	1.07	0.26	101	101	87	2.17	0.00	92	0.013	104	103	117.7	0.06	0.64	15.50	100.6	179.1	175.6	78.2	178.9	129	83	81	87		1.001	5.284	532
1482	240.563	244.146		0.16	0.16	1.32	1.07	0.26	101	101	86	2.16	0.00	92	0.013	104	103	117.8	-0.06	0.68	15.47	100.5	178.9	175.3	78.2	178.7	129	82	80	86		1.001	5.611	565
1483	240.727	244.311		0.16	0.17	1.31	1.07	0.26	101	101	87	2.17	0.00	92	0.013	104	103	117.7	0.13	0.66	15.46	100.4	178.8	175.3	78.2	178.6	129	81	80	87		1.001	5.449	548
1484	240.891	244.476		0.16	0.16	1.31	1.07	0.26	101	101	87	2.15	0.00	91	0.015	97	96	117.8	-0.15	0.69	15.45	100.3	178.7	175.0	78.2	178.4	129	81	80	87		1.001	5.773	579
1485	241.055	244.641		0.16	0.16	1.31	1.07	0.26	101	101	87	2.16	0.00	91	0.013	104	103	117.8	0.08	0.64	15.56	100.1	178.5	174.9	78.3	178.3	129	81	79	87		1.001	5.286	529
1486	241.219	244.806		0.16	0.17	1.31	1.08	0.26	101	101	87	2.16	0.00	91	0.014	100	99	117.8	0.01	0.68	15.48	99.9	178.4	174.8	78.2	178.1	129	81	79	87		1.001	5.612	561
1487	241.383	244.971		0.16	0.16	1.31	1.07	0.26	101	101	87	2.17	0.00	91	0.013	104	103	117.7	0.08	0.68	15.48	99.8	178.2	174.6	78.2	178.0	129	82	80	87		1.001	5.610	561
1488	241.547	245.136		0.16	0.16	1.30	1.05	0.26	101	101	87	2.17	0.00	93	0.013	104	103	117.6	0.07	0.69	15.48	99.7	178.2	174.6	78.2	177.9	150	82	81	87		1.001	5.775	576
1489	241.709	245.296		0.16	0.16	1.31	1.17	0.26	101	101	87	2.19	0.00	96	0.013	103	100	117.4	0.16	0.68	15.45	99.5	178.0	174.4	78.3	177.8	150	83	81	87		1.001	5.616	559
1490	241.872	245.467		0.16	0.17	1.31	1.04	0.26	101	101	86	2.16	0.00	93	0.013	103	107	117.5	-0.11	0.66	15.51	99.3	177.8	174.2	78.3	177.6	144	83	82	86		1.001	5.449	541
1491	242.035	245.630		0.16	0.16	1.31	1.05	0.26	101	101	87	2.17	0.00	92	0.013	103	102	117.6	-0.05	0.66	15.55	99.1	177.7	174.1	78.3	177.4	141	84	83	87		1.001	5.449	541
1492	242.199	245.793		0.16	0.16	1.31	1.05	0.26	101	101	87	2.16	0.00	92	0.013	104	102	117.6	0.03	0.66	15.51	99.0	177.6	174.0	78.3	177.3	138	84	83	87		1.001	5.447	540
1493	242.363	245.957		0.16	0.16	1.31	1.05	0.26	101	101	87	2.17	0.00	91	0.014	100	99	117.5	0.03	0.68	15.38	98.9	177.4	173.8	78.3	177.2	136	85	84	87		1.001	5.616	556
1494	242.527	246.121		0.16	0.16	1.31	1.06	0.26	101	101	87	2.18	0.00	91	0.012	108	107	117.5	0.04	0.68	15.46	98.6	177.3	173.7	78.4	177.0	135	85	84	87		1.001	5.641	557
1495	242.690	246.285		0.16	0.16	1.31	1.05	0.26	101	101	86	2.16	0.00	91	0.015	96	95	117.5	0.00	0.69	15.46	98.5	177.1	173.6	78.4	176.9	134	85	84	86		1.001	5.771	569
1496	242.853	246.448		0.16	0.16	1.31	1.05	0.26	101	101	87	2.16	0.00	91	0.014	99	98	117.4	0.09	0.69	15.50	98.4	176.9	173.4	78.3	176.7	133	85	85	87		1.001	5.770	569
1497	243.017	246.611		0.16	0.16	1.30	1.05	0.26	101	101	87	2.18	0.00	91	0.013	104	102	117.6	-0.19	0.64	15.44	98.3	176.8	173.2	78.2	176.5	132	86	85	87		1.001	5.286	520
1498	243.181	246.775		0.16	0.16	1.31	1.06	0.26	101	101	86	2.17	0.00	91	0.015	97	95	117.5	0.06	0.68	15.51	98.3	176.7	173.1	78.1	176.4	131	86	85	86		1.001	5.609	552
1499	243.345	246.939		0.16	0.16	1.31	1.06	0.26	101	101	86	2.18	0.00	91	0.014	100	99	117.5	0.07	0.67	15.58	98.3	176.5	173.0	78.1	176.3	130	86	85	86		1.001	5.608	552
1500	243.509	247.104		0.16	0.17	1.31	1.06	0.26	101	101	86	2.18	0.00	91	0.013	104	103	117.4	0.02	0.66	15.51	98.2	176.4	172.8	77.9	176.1	129	86	85	86		1.001	5.444	535
1501	243.672	247.267		0.16	0.16	1.31	1.06	0.26	101	101	87	2.17	0.00	91	0.014	99	98	117.5	-0.06	0.68	15.48	98.2	176.3	172.7	77.8	176.0	129	86	86	87		1.001	5.610	552
1502	243.835	247.431		0.16	0.16	1.32	1.05	0.26	101	101	87	2.18	0.00	91	0.014	99	99	117.4	0.05	0.66	15.55	98.2	176.1	172.6	77.7	175.9	128	85	85	87		1.001	5.448	536
1503	243.998	247.595		0.16	0.16	1.31	1.06	0.26	101	101	86	2.17	0.00	91	0.015	96	95	117.6	-0.12	0.69	15.43	98.1	176.0	172.5	77.7	175.7	128	85	84	86		1.001	5.771	566
1504	244.162	247.758		0.16	0.16	1.32	1.06	0.26	101	101	86	2.17	0.00	91	0.014	100	98	117.5	0.04	0.69	15.44	97.9	175.8	172.3	77.6	175.6	127	84	83	86		1.001	5.751	564
1505	244.325	247.922		0.16	0.16	1.31	1.06	0.26	101	101	87	2.16	0.00	91	0.013	103	102	117.5	0.01	0.68	15.45	97.8	175.7	172.1	77.6	175.4	127	83	82	87		1.001	5.612	550
1506	244.489	248.087		0.16	0.16	1.31	1.05	0.26	101	101	87	2.17	0.00	91	0.014	100	99	117.3	0.23	0.69	15.47	97.7	175.5	172.0	77.6	175.3	127	82	81	87		1.001	5.724	560
1507	244.653	248.251		0.16	0.16	1.30	1.06	0.26	101	101	86	2.16	0.00	91	0.013	104	102	117.4	-0.10	0.68	15.58	97.6	175.4	171.8	77.5	175.1	127	81	80	86		1.001	5.613	549
1508	244.817	248.414		0.16	0.16	1.31	1.05	0.26	101	101	87	2.17	0.00	91	0.015	97	95	117.4	-0.02	0.68	15.50	97.4	175.2	171.7	77.5	175.0	127	81	80	87		1.001	5.612	547
1509	244.981	248.578		0.16	0.16	1.31	1.06	0.26	101	101	86	2.15	0.00	91	0.013	104	102	117.4	-0.04	0.68	15.44	97.4	175.2	171.6	77.5	174.9	126	80	79	86		1.001	5.613	547
1510	245.144	248.741		0.16	0.16	1.31	1.06	0.26	101	101	87	2.17	0.00	91	0.014	99	98	117.5	-0.05	0.66	15.50	97.3	175.0	171.4	77.5	174.7	126	79	78	87		1.001	5.448	530
1511	245.308	248.905		0.16	0.16	1.31	1.06	0.26	101	101	86	2.15	0.00	91	0.015	97	95	117.6	-0.08	0.67	15.56	97.1	174.8	171.2	77.5	174.6	125	78	78	86		1.001	5.610	545
1512	245.472	249.070		0.16	0.16	1.32	1.06	0.26	101	101	86	2.15	0.00	91	0.014	100	99	117.5	0.05	0.64	15.48	97.0	174.6	171.1	77.5	174.4	125	78	77	86		1.001	5.289	513
1513	245.635	249.234		0.16	0.16	1.32	1.06	0.26	101	101	86	2.17	0.00	91	0.012	107	107	117.4	0.14	0.67	15.48	96.8	174.5	170.9	77.4	174.2	125	78	77	86		1.001	5.609	543
1514	245.799	249.398		0.16	0.16	1.32	1.05	0.26	101	101	86	2.15	0.00	91	0.014	100	99	117.5	-0.15	0.73	15.55	96.7	174.4	170.9	77.4	174.1	125	78	77	86		1.001	6.089	589
1515	245.963	249.561		0.16	0.16	1.32	1.05	0.26	101	101	86	2.15	0.00	91	0.012	108	106	117.7	-0.16	0.71	15.47	96.6	174.2	170.7	77.4	174.0	125	78	77	86		1.001	5.917	572
1516	246.127	249.725		0.16	0.16	1.31	1.06	0.26	101	101	86	2.17	0.00	91	0.014	100	99	117.6	0.12	0.68	15.57	96.3	174.1	170.6	77.6	173.8	125	78	77	86		1.001	5.611	541
1517	246.291	249.889		0.16	0.16	1.31	1.06	0.26	101	101	86	2.16	0.00	91	0.014	100	99	117.5	0.09	0.70	15.47	96.1	173.9	170.4	77.6	173.7	124	78	77	86		1.001	5.834	561
1518	246.455	250.053		0.16	0.16	1.31	1.06	0.26	101	101	87	2.15	0.00	91	0.013	104	102	117.7	-0.18	0.66	15.57	96.0	173.8	170.3	77.6	173.5	124	78	77	87		1.001	5.449	524
1519	246.619	250.216		0.16	0.16	1.30	0.98	0.26	101	101	86	2.19	0.00	93	0.013	104	102	117.4	0.21	0.68	15.47	95.8	173.7	170.1	77.6	173.4	144	78	77	86		1.001	5.614	538
1520	246.781	250.370		0.16	0.15	1.30	1.01	0.26	101	101	86	2.18	0.00	94	0.013	103	96	117.4	0.09	0.68	15.61	95.5	173.5	170.0	77.8	173.3	144	78	76	86		1.001	5.611	536
1521	246.945	250.533		0.16	0.16	1.31	1.03	0.26	101	101	86	2.16	0.00	92	0.014	100	98	117.4	-0.08	0.66	15.53	95.3	173.3	169.8	77.8	173.1	139	79	77	86		1.001	5.450	520
1522	247.109	250.696		0.16	0.16	1.31	1.04	0.26	101	101	86	2.16	0.00	91	0.015	97	95	117.4	-0.01	0.68	15.52	95.1	173.2	169.7	77.9	173.0	135	79	78	86		1.001	5.612	534
1523	247.272	250.857		0.16	0.16	1.31	1.04	0.26	101	101	86	2.17	0.00	91	0.015	96	94	117.5	-0.01	0.71	15.48	94.9	173.1	169.6	77.9	172.8	133	80	79	86		1.001	5.932	564
1524	247.435	251.020		0.16	0.16	1.31	1.04	0.26	101	101	86	2.16	0.00	91	0.014	99	98	117.4	0.04	0.68	15.56	94.7	173.0	169.5	78.0	172.7	131	81	80	86		1.001	5.616	533
1525	247.599	251.183		0.16	0.16	1.31	1.04	0.26	101	101	86	2.16	0.00	91	0.015	97	95	117.4	0.01	0.68	15.43	94.6	172.8	169.4	78.0	172.6	129	81	80	86		1.001	5.627	533
1526	247.763	251.346		0.16	0.16	1.31	1.04	0.26	101	101	86	2.17	0.00	91	0.014	100	98	117.4	-0.02	0.66	15.57	94.4	172.6	169.2	78.0	172.4	128	82	81	86		1.001	5.496	519
1527	247.926	251.509		0.16	0.16	1.31	1.04	0.26	101	101	86	2.18	0.00	90	0.013	103	102	117.4	0.03	0.69	15.54	94.1	172.5	169.0	78.1	172.2	128	83	81	86		1.001	5.747	542
1528	248.090	251.671		0.16	0.16	1.31	1.04	0.26	101	101	86	2.17	0.00	90	0.014	100	97	117.4	0.03	0.66	15.49	94.0	172.3	168.9	78.1	172.1	127	83	82	86		1.001	5.452	513
1529	248.254	251.834		0.16	0.16	1.31	1.04	0.26	101	101	86	2.16	0.00	90	0.013	104	102	117.4	-0.02	0.68	15.45	93.8	172.2	168.7	78.1	171.9	126	83	82	86		1.001	5.614	527
1530	248.418	251.997		0.16	0.16	1.31	1.04	0.26	101	101	86	2.17	0.00	90	0.013	104	102	117.4	-0.03	0.68	15.49	93.7	172.1	168.6	78.1	171.8	126	84	83	86		1.001	5.612	526
1531	248.581	252.160		0.16	0.16	1.31	1.04	0.26	101	101	86	2.17	0.00	90	0.012	107	106	117.4	0.04	0.68	15.46	93.6	171.9	168.5	78.1	171.7	125	84	83	86		1.001	5.613	526
1532	248.745	252.322		0.16	0.16	1.31	1.04	0.26	101	101	86	2.16	0.00	90	0.012	108	105	117.3	0.02	0.69	15.53	93.4	171.7	168.3	78.1	171.5	125	84	83	86		1.001	5.774	540
1533	248.909	252.485		0.16	0.16	1.31	1.04	0.26	101	101	86	2.18	0.00	90	0.015	97	95	117.4	-0.09	0.66	15.46	93.2	171.7	168.1	78.1	171.3	125	84	84	86		1.001	5.450	509
1534	249.072	252.648		0.16	0.16	1.31	1.04	0.26	101	101	86	2.18	0.00	90	0.014	99	98	117.4	0.00	0.66	15.51	93.0	171.5	167.9	78.2	171.2	124	85	84	86		1.001	5.452	508
1535	249.235	252.811		0.16	0.16	1.31	1.04	0.26	101	101	86	2.17	0.00	91	0.014	99	98	117.3	0.16	0.69	15.42	93.0	171.3	167.8	78.1	171.1	124	85	84	86		1.001	5.774	537
1536	249.398	252.974		0.16	0.16	1.31	1.04	0.26	101	101	86	2.16	0.00	90	0.013	103	102	117.3	-0.01	0.73	15.60	92.9	171.2	167.6	78.1	171.0	124	85	84	86		1.001	6.070	564
1537	249.562	253.137		0.16	0.16	1.31	1.04	0.26	101	101	86	2.18	0.00	90	0.011	113	111	117.3	-0.04	0.72	15.53	92.7	171.1	167.5	78.1	170.8	124	85	85	86		1.001	5.970	554
1538	249.726	253.299		0.16	0.16	1.31	1.04	0.26	101	101	86	2.17	0.00	90	0.014	100	97	117.4	-0.06	0.69	15.48	92.6	170.9	167.4	78.1	170.7	123	85	84	86		1.001	5.768	535
1539	249.890	253.462		0.16	0.16	1.31	1.05	0.26	101	101	86	2.17	0.00	90	0.014	100	98	117.5	-0.09	0.69	15.50	92.5	170.7	167.2	78.1	170.5	123	84	83	86		1.001	5.772	534
1540	250.053	253.626		0.16	0.16	1.31	1.04	0.26	101	101	86	2.18	0.00	90	0.014	99	99	117.3	0.17	0.71	15.52	92.4	170.6	167.1	78.0	170.4	123	83	82	86		1.001	5.936	549

Elapsed Time	Particulate Sampling Data																	Fuel Weight, lb		Flow, gpm		Temperature Data, oF													
	Gas Meter Cubic Feet (1)	Gas Meter Cubic Feet (2)	Gas Meter Cubic Feet (amb)	Sample Rate, cfm (1)	Sample Rate, cfm (2)	Orifice dH (1)	Orifice dH (2)	Orifice dH (amb)	Meter oF (1)	Meter oF (2)	Meter oF (amb)	Meter Vac. In. Hg. (1)	Meter Vac. In. Hg. (2)	Dilution Tunnel Temp.	Dilution Tunnel dP	Pro. Rate (%) (1)	Pro. Rate (%) (2)	Scale Reading	Weight Change	Load Side Liquid Flow Rate	Boiler Side Liquid Flow Rate (optional)	Thermopile ΔT	Boiler to Heat Exch. Temp.	Heat Exch to Boiler Temp.	Inlet Load Temp.	Outlet Load Temp.	Stack	Filter (1)	Filter (2)	Ambient		Specific Heat of Inlet Water (BTU/lb-°F)	Mass Flow Rate of Inlet Water (lb/min)	Heat Output, Btu
1541	250.217	253.789		0.16	0.16	1.31	1.04	0.26	101	101	86	2.16	0.00	90	0.014	100	98	117.3	-0.03	0.73	15.47	92.2	170.4	166.8	78.0	170.1	122	83	81	86		1.001	6.097	563
1542	250.381	253.951		0.16	0.16	1.31	1.05	0.26	101	101	86	2.16	0.00	90	0.014	100	97	117.3	0.00	0.71	15.41	92.1	170.3	166.8	78.0	170.1	121	83	81	86		1.001	5.936	548
1543	250.544	254.114		0.16	0.16	1.31	1.05	0.26	101	101	86	2.18	0.00	90	0.012	107	106	117.4	-0.06	0.71	15.39	92.0	170.1	166.6	78.0	169.9	121	83	81	86		1.001	5.935	546
1544	250.708	254.277		0.16	0.16	1.31	1.05	0.26	101	101	86	2.16	0.00	90	0.014	100	98	117.4	0.02	0.64	15.45	91.8	170.0	166.4	77.9	169.7	121	82	81	86		1.001	5.292	486
1545	250.871	254.441		0.16	0.16	1.31	1.05	0.26	101	101	86	2.17	0.00	90	0.014	99	99	117.3	0.02	0.70	15.53	91.7	169.9	166.3	77.9	169.6	120	82	80	86		1.001	5.778	531
1546	251.034	254.603		0.16	0.16	1.31	1.05	0.26	101	101	86	2.17	0.00	90	0.013	103	101	117.4	-0.08	0.69	15.50	91.6	169.7	166.2	77.9	169.5	121	82	80	86		1.001	5.751	527
1547	251.198	254.766		0.16	0.16	1.31	1.05	0.26	101	101	86	2.17	0.00	90	0.012	108	106	117.5	-0.03	0.70	15.50	91.5	169.6	166.0	77.8	169.4	121	82	80	86		1.001	5.796	531
1548	251.362	254.929		0.16	0.16	1.32	1.05	0.26	101	101	86	2.18	0.00	90	0.014	100	98	117.3	0.11	0.73	15.50	91.3	169.4	165.9	77.9	169.2	120	82	81	86		1.001	6.079	556
1549	251.525	255.092		0.16	0.16	1.32	1.05	0.26	101	101	86	2.18	0.00	90	0.014	99	98	117.5	-0.15	0.71	15.53	91.3	169.3	165.7	77.8	169.1	120	82	81	86		1.001	5.936	543
1550	251.689	255.255		0.16	0.16	1.30	0.97	0.26	101	101	86	2.20	0.00	94	0.015	97	95	117.4	0.08	0.71	15.53	91.0	169.1	165.5	77.8	168.8	140	83	81	86		1.001	5.937	541
1551	251.852	255.411		0.16	0.16	1.31	1.03	0.26	101	101	86	2.17	0.00	93	0.013	103	98	117.4	0.00	0.69	15.53	90.9	169.0	165.4	77.8	168.8	139	82	81	86		1.001	5.775	526
1552	252.016	255.574		0.16	0.16	1.31	1.04	0.26	101	101	86	2.18	0.00	91	0.014	100	98	117.2	0.21	0.66	15.57	90.8	168.8	165.3	77.8	168.6	134	83	81	86		1.001	5.452	496
1553	252.180	255.737		0.16	0.16	1.30	1.04	0.26	101	101	86	2.18	0.00	90	0.011	113	111	117.3	-0.05	0.66	15.50	90.7	168.7	165.2	77.8	168.4	130	83	81	86		1.001	5.453	495
1554	252.343	255.899		0.16	0.16	1.31	1.04	0.26	101	101	86	2.18	0.00	90	0.012	107	105	117.2	0.05	0.68	15.50	90.6	168.6	165.1	77.8	168.3	128	83	82	86		1.001	5.612	509
1555	252.507	256.061		0.16	0.16	1.31	1.04	0.26	101	101	86	2.18	0.00	90	0.015	97	94	117.4	-0.18	0.66	15.48	90.4	168.3	164.9	77.8	168.1	127	84	83	86		1.001	5.450	493
1556	252.671	256.223		0.16	0.16	1.32	1.04	0.26	101	101	86	2.18	0.00	90	0.014	100	97	117.4	0.03	0.66	15.54	90.3	168.3	164.8	77.8	168.0	126	84	83	86		1.001	5.452	493
1557	252.834	256.386		0.16	0.16	1.31	1.04	0.26	101	101	86	2.17	0.00	90	0.014	99	98	117.4	0.02	0.72	15.57	90.1	168.1	164.6	77.8	167.8	125	84	83	86		1.001	5.986	540
1558	252.997	256.550		0.16	0.16	1.32	1.04	0.26	101	101	86	2.18	0.00	90	0.014	99	99	117.3	0.10	0.71	15.39	89.9	167.9	164.5	77.8	167.7	124	85	84	86		1.001	5.859	528
1559	253.161	256.712		0.16	0.16	1.31	1.04	0.26	101	101	86	2.17	0.00	90	0.012	108	105	117.3	-0.03	0.77	15.43	89.8	167.7	164.3	77.7	167.5	123	85	84	86		1.001	6.417	577
1560	253.324	256.874		0.16	0.16	1.32	1.04	0.26	101	101	86	2.17	0.00	90	0.013	103	101	117.1	0.13	0.68	15.51	89.6	167.6	164.2	77.8	167.4	122	85	84	86		1.001	5.614	504
1561	253.488	257.037		0.16	0.16	1.31	1.04	0.26	101	101	86	2.16	0.00	90	0.014	100	98	117.3	-0.19	0.70	15.51	89.5	167.5	164.1	77.7	167.3	122	85	84	86		1.001	5.777	518
1562	253.652	257.200		0.16	0.16	1.31	1.04	0.26	101	101	86	2.17	0.00	90	0.014	100	98	117.4	-0.08	0.69	15.48	89.4	167.3	164.0	77.8	167.1	122	86	85	86		1.001	5.774	517
1563	253.815	257.362		0.16	0.16	1.31	1.04	0.26	101	101	86	2.18	0.00	90	0.014	99	97	117.2	0.22	0.69	15.52	89.2	167.2	163.8	77.7	166.9	121	86	85	86		1.001	5.776	516
1564	253.979	257.524		0.16	0.16	1.31	1.04	0.26	101	101	86	2.18	0.00	90	0.013	104	101	117.3	-0.10	0.69	15.57	89.1	167.0	163.6	77.7	166.8	121	86	85	86		1.001	5.773	515
1565	254.143	257.687		0.16	0.16	1.31	1.04	0.26	101	101	86	2.17	0.00	90	0.014	100	98	117.2	0.08	0.68	15.56	88.9	166.8	163.5	77.7	166.6	121	86	85	86		1.001	5.611	499
1566	254.307	257.850		0.16	0.16	1.32	1.04	0.26	101	101	86	2.18	0.00	90	0.015	97	95	117.2	-0.04	0.71	15.52	88.8	166.8	163.4	77.7	166.5	120	86	85	86		1.001	5.939	528
1567	254.470	258.013		0.16	0.16	1.31	1.04	0.26	101	101	86	2.18	0.00	90	0.014	99	98	117.3	-0.06	0.73	15.41	88.7	166.6	163.2	77.7	166.4	120	86	86	86		1.001	6.072	539
1568	254.634	258.176		0.16	0.16	1.32	1.04	0.26	101	101	86	2.18	0.00	90	0.013	104	102	117.4	-0.10	0.70	15.52	88.4	166.4	163.1	77.7	166.2	119	86	86	86		1.001	5.853	518
1569	254.797	258.338		0.16	0.16	1.31	1.04	0.26	101	101	86	2.17	0.00	90	0.013	103	101	117.3	0.07	0.71	15.48	88.4	166.3	163.0	77.7	166.1	119	86	86	86		1.001	5.938	526
1570	254.960	258.500		0.16	0.16	1.31	1.04	0.26	101	101	86	2.17	0.00	90	0.013	103	101	117.3	0.06	0.75	15.52	88.2	166.1	162.8	77.7	165.9	120	86	86	86		1.001	6.261	553
1571	255.124	258.663		0.16	0.16	1.31	1.04	0.26	101	101	86	2.18	0.00	90	0.014	100	98	117.2	0.06	0.64	15.49	88.1	166.0	162.7	77.7	165.8	120	87	86	86		1.001	5.291	467
1572	255.287	258.826		0.16	0.16	1.32	1.04	0.26	101	101	86	2.18	0.00	90	0.014	99	98	117.5	-0.24	0.71	15.54	87.9	165.8	162.5	77.7	165.6	119	87	86	86		1.001	5.938	523
1573	255.451	258.988		0.16	0.16	1.31	1.04	0.26	101	101	86	2.17	0.00	90	0.014	100	97	117.3	0.18	0.71	15.54	87.7	165.7	162.3	77.7	165.4	119	87	86	86		1.001	5.938	521
1574	255.615	259.151		0.16	0.16	1.31	1.04	0.26	101	101	86	2.17	0.00	90	0.013	104	102	117.3	0.00	0.70	15.49	87.7	165.6	162.2	77.7	165.3	119	87	86	86		1.001	5.777	507
1575	255.778	259.314		0.16	0.16	1.31	1.04	0.26	101	101	86	2.19	0.00	90	0.015	96	95	117.2	0.10	0.79	15.55	87.5	165.5	162.1	77.7	165.2	119	87	86	86		1.001	6.587	577
1576	255.942	259.477		0.16	0.16	1.31	1.04	0.26	101	101	86	2.17	0.00	90	0.014	100	98	117.3	-0.17	0.68	15.48	87.4	165.3	162.0	77.7	165.1	118	87	86	86		1.001	5.612	491
1577	256.106	259.640		0.16	0.16	1.31	1.04	0.26	101	100	86	2.18	0.00	90	0.014	100	98	117.3	0.06	0.72	15.51	87.2	165.1	161.8	77.7	164.9	118	87	86	86		1.001	5.976	522
1578	256.269	259.802		0.16	0.16	1.31	1.04	0.26	101	100	86	2.18	0.00	90	0.014	99	98	117.3	-0.06	0.71	15.49	87.1	164.9	161.6	77.7	164.8	118	87	86	86		1.001	5.920	516
1579	256.433	259.964		0.16	0.16	1.31	1.04	0.26	101	100	86	2.17	0.00	89	0.013	104	101	117.2	0.14	0.68	15.52	87.0	164.8	161.5	77.7	164.6	117	87	87	86		1.001	5.636	491
1580	256.596	260.127		0.16	0.16	1.31	1.04	0.26	101	100	86	2.17	0.00	89	0.013	103	102	117.3	-0.06	0.66	15.55	86.8	164.7	161.4	77.7	164.5	117	87	87	86		1.001	5.501	478
1581	256.759	260.289		0.16	0.16	1.30	0.98	0.26	101	100	86	2.21	0.00	93	0.014	100	98	117.4	-0.09	0.72	15.51	86.7	164.5	161.2	77.6	164.3	136	87	87	86		1.001	5.945	516
1582	256.922	260.448		0.16	0.16	1.31	1.03	0.26	101	100	86	2.19	0.00	91	0.013	103	99	117.2	0.13	0.75	15.60	86.5	164.4	161.1	77.6	164.2	134	87	87	86		1.001	6.266	543
1583	257.086	260.610		0.16	0.16	1.31	1.04	0.26	101	100	86	2.17	0.00	90	0.013	104	101	117.3	-0.07	0.73	15.55	86.4	164.2	160.9	77.6	164.0	129	87	87	86		1.001	6.104	528
1584	257.249	260.773		0.16	0.16	1.31	1.04	0.26	101	100	86	2.18	0.00	90	0.014	99	98	117.1	0.15	0.71	15.49	86.3	164.1	160.9	77.6	163.9	127	87	87	86		1.001	5.942	514
1585	257.413	260.935		0.16	0.16	1.30	1.04	0.26	101	100	86	2.19	0.00	90	0.013	104	101	117.2	-0.10	0.70	15.50	86.2	164.0	160.7	77.6	163.8	125	87	87	86		1.001	5.781	499
1586	257.577	261.097		0.16	0.16	1.31	1.04	0.26	101	100	86	2.17	0.00	90	0.012	108	105	117.3	-0.09	0.74	15.44	86.0	163.8	160.5	77.6	163.6	124	87	87	86		1.001	6.111	526
1587	257.740	261.259		0.16	0.16	1.31	1.04	0.26	101	100	86	2.17	0.00	89	0.015	96	94	117.3	0.07	0.75	15.48	85.9	163.7	160.4	77.6	163.5	122	87	87	86		1.001	6.252	538
1588	257.904	261.422		0.16	0.16	1.31	1.04	0.26	101	100	86	2.19	0.00	89	0.014	100	98	117.2	0.04	0.73	15.56	85.8	163.5	160.2	77.6	163.3	122	87	87	86		1.001	6.101	524
1589	258.068	261.585		0.16	0.16	1.31	1.04	0.26	101	100	86	2.18	0.00	89	0.012	108	106	117.2	-0.01	0.67	15.52	85.6	163.4	160.2	77.6	163.2	121	87	87	86		1.001	5.537	475
1590	258.231	261.747		0.16	0.16	1.31	1.04	0.26	101	100	86	2.19	0.00	89	0.013	103	101	117.1	0.12	0.70	15.41	85.5	163.3	160.0	77.6	163.1	120	86	86	86		1.001	5.779	495
1591	258.395	261.909		0.16	0.16	1.31	1.04	0.26	101	100	86	2.17	0.00	89	0.014	100	97	117.2	-0.11	0.77	15.49	85.2	163.0	159.7	77.6	162.8	120	85	85	86		1.001	6.426	548
1592	258.558	262.071		0.16	0.16	1.32	1.04	0.26	101	100	86	2.17	0.00	89	0.014	99	97	117.2	-0.01	0.79	15.45	85.2	162.9	159.5	77.6	162.7	119	83	83	86		1.001	6.587	562
1593	258.721	262.235		0.16	0.16	1.32	1.04	0.26	101	100	86	2.17	0.00	89	0.014	99	99	117.1	0.17	0.64	15.41	85.0	162.8	159.4	77.6	162.6	119	82	82	86		1.001	5.293	450
1594	258.885	262.397		0.16	0.16	1.32	1.04	0.26	101	100	86	2.16	0.00	89	0.013	104	101	117.2	-0.16	0.70	15.42	84.9	162.6	159.3	77.6	162.4	118	81	81	86		1.001	5.776	491
1595	259.049	262.559		0.16	0.16	1.32	1.04	0.26	101	100	86	2.17	0.00	89	0.014	100	97	117.4	-0.17	0.73	15.56	84.7	162.5	159.1	77.6	162.3	117	81	81	86		1.001	6.101	518
1596	259.212	262.721		0.16	0.16	1.32	1.04	0.26	101	100	86	2.18	0.00	89	0.013	103	101	117.2	0.22	0.73	15.52	84.6	162.3	159.0	77.6	162.2	117	81	81	86		1.001	6.102	517
1597	259.376	262.884		0.16	0.16	1.31	1.00	0.26	101	100	86	2.19	0.00	91	0.013	104	102	117.2	-0.07	0.74	15.46	84.4	162.2	158.9	77.6	162.0	133	82	82	86		1.001	6.168	521
1598	259.539	263.041		0.16	0.16	1.30	0.98	0.26	101	100	86	2.21	0.00	96	0.014	100	95	117.1	0.17	0.76	15.55	84.3	162.1	158.8	77.6	161.8	145	83	82	86		1.001	6.292	531
1599	259.703	263.203		0.16	0.16	1.30	1.06	0.26	101	100	86	2.20	0.00	97	0.014	101	98	117.2	-0.09	0.70	15.45	84.2	161.9	158.7	77.6	161.7	150	83	83	86		1.001	5.785	487
1600	259.866	263.368		0.16	0.17	1.30	1.07	0.26	101	100	86	2.19	0.00	98	0.013	104	104	117.1	0.05	0.75	15.52	84.0	161.8	158.5	77.6	161.6	153	84	83	86		1.001	6.257	526
1601	260.030	263.532		0.16	0.16	1.31	1.07	0.26	101	100	86	2.18	0.00	98	0.014	101	99	117.1	0.04	0.73	15.57	83.8	161.6	158.3	77.6	161.4	154	85	84	86		1.001	6.106	512
1602	260.193	263.698		0.16	0.17	1.31	1.08	0.26	101	100	86	2.20	0.00	98	0.013	104	104	117.1	-0.04	0.70	15.49	83.8	161.5	158.3	77.5	161.3	155	85	84	86		1.001	5.779	485

Elapsed Time	Particulate Sampling Data																	Fuel Weight, lb		Flow, gpm		Temperature Data, oF													
	Gas Meter Cubic Feet (1)	Gas Meter Cubic Feet (2)	Gas Meter Cubic Feet (amb)	Sample Rate, cfm (1)	Sample Rate, cfm (2)	Orifice dH (1)	Orifice dH (2)	Orifice dH (amb)	Meter oF (1)	Meter oF (2)	Meter oF (amb)	Meter Vac. In. Hg. (1)	Meter Vac. In. Hg. (2)	Dilution Tunnel Temp.	Dilution Tunnel dP	Pro. Rate (%) (1)	Pro. Rate (%) (2)	Scale Reading	Weight Change	Load Side Liquid Flow Rate	Boiler Side Liquid Flow Rate (optional)	Thermopile ΔT	Boiler to Heat Exch. Temp.	Heat Exch to Boiler Temp.	Inlet Load Temp.	Outlet Load Temp.	Stack	Filter (1)	Filter (2)	Ambient		Specific Heat of Inlet Water (BTU/lb-°F)	Mass Flow Rate of Inlet Water (lb/min)	Heat Output, Btu
1603	260.357	263.864		0.16	0.17	1.31	1.08	0.26	101	100	86	2.18	0.00	99	0.013	105	105	117.1	0.01	0.75	15.53	83.7	161.3	158.2	77.5	161.2	156	85	85	86		1.001	6.265	525
1604	260.520	264.029		0.16	0.17	1.32	1.08	0.26	101	100	86	2.18	0.00	99	0.014	100	100	117.0	0.14	0.73	15.47	83.6	161.3	158.0	77.4	161.0	156	86	85	86		1.001	6.103	511
1605	260.683	264.195		0.16	0.17	1.31	1.08	0.26	101	100	86	2.18	0.00	99	0.013	104	105	116.9	0.11	0.71	15.52	83.6	161.2	157.9	77.3	160.9	156	86	85	86		1.001	5.940	497
1606	260.846	264.359		0.16	0.16	1.31	1.07	0.26	101	100	86	2.18	0.00	99	0.014	100	100	116.9	-0.03	0.66	15.52	83.5	161.0	157.8	77.3	160.8	157	86	86	86		1.001	5.453	456
1607	261.010	264.524		0.16	0.17	1.31	1.07	0.26	101	100	86	2.19	0.00	100	0.014	101	100	116.7	0.16	0.74	15.57	83.4	160.9	157.7	77.3	160.7	157	86	86	86		1.001	6.139	513
1608	261.173	264.688		0.16	0.16	1.31	1.07	0.26	101	100	86	2.19	0.00	100	0.013	104	103	116.6	0.10	0.74	15.42	83.4	160.9	157.6	77.2	160.6	158	87	86	86		1.001	6.135	512
1609	261.336	264.852		0.16	0.16	1.31	1.06	0.26	101	100	86	2.19	0.00	100	0.015	97	96	116.4	0.24	0.77	15.58	83.3	160.8	157.5	77.2	160.6	160	87	86	86		1.001	6.386	533
1610	261.500	265.016		0.16	0.16	1.31	1.03	0.26	101	100	86	2.19	0.00	101	0.014	101	100	116.1	0.31	0.72	15.41	83.4	160.9	157.6	77.2	160.6	163	87	86	86		1.001	5.973	499
1611	261.663	265.174		0.16	0.16	1.30	0.98	0.26	101	100	86	2.22	0.00	101	0.014	100	96	115.8	0.31	0.71	15.41	83.6	161.1	157.8	77.2	160.8	165	87	87	86		1.001	5.941	497
1612	261.825	265.329		0.16	0.16	1.30	0.90	0.26	101	100	86	2.22	0.00	102	0.013	104	98	115.4	0.36	0.75	15.59	83.9	161.3	158.0	77.2	161.0	168	87	87	86		1.001	6.266	526
1613	261.987	265.489		0.16	0.16	1.29	0.95	0.26	101	100	86	2.25	0.00	103	0.014	100	97	114.8	0.57	0.68	15.40	84.1	161.6	158.3	77.1	161.3	173	87	87	86		1.001	5.617	473
1614	262.148	265.634		0.16	0.15	1.27	0.72	0.26	101	100	86	2.29	0.00	103	0.013	103	92	114.3	0.54	0.79	15.40	84.5	161.9	158.6	77.1	161.6	179	88	87	86		1.001	6.590	557
1615	262.308	265.759		0.16	0.13	1.25	0.55	0.26	100	100	86	2.35	0.00	105	0.014	99	76	113.8	0.55	0.66	15.54	84.8	162.2	158.9	77.1	161.9	189	88	87	86		1.001	5.453	463
1616	262.466	265.875		0.16	0.12	1.24	0.51	0.26	100	100	86	2.38	0.00	106	0.015	95	68	113.1	0.66	0.66	15.54	85.1	162.5	159.2	77.1	162.2	198	88	87	86		1.001	5.454	464
1617	262.624	265.987		0.16	0.11	1.24	0.48	0.26	101	100	86	2.40	0.00	108	0.015	95	66	112.6	0.52	0.68	15.56	85.5	163.0	159.6	77.1	162.6	209	88	87	86		1.001	5.626	482
1618	262.782	266.097		0.16	0.11	1.24	0.47	0.26	101	100	86	2.41	0.00	111	0.014	98	67	111.9	0.67	0.79	15.56	86.0	163.5	160.1	77.1	163.1	219	88	87	86		1.001	6.565	565
1619	262.940	266.206		0.16	0.11	1.23	0.50	0.26	100	100	86	2.43	0.00	113	0.013	102	70	111.1	0.80	0.77	15.47	86.5	164.0	160.6	77.1	163.7	228	89	87	86		1.001	6.428	557
1620	263.097	266.378		0.16	0.17	1.21	1.55	0.26	100	100	86	2.43	0.00	115	0.014	98	106	110.5	0.65	0.70	15.44	87.1	164.6	161.1	77.1	164.1	235	89	88	86		1.001	5.783	504
1621	263.253	266.576		0.16	0.20	1.21	1.56	0.26	100	100	86	2.45	0.00	117	0.014	98	122	109.7	0.75	0.73	15.51	87.9	165.4	161.9	77.1	164.9	241	89	88	86		1.001	6.104	537
1622	263.409	266.773		0.16	0.20	1.20	1.57	0.26	100	100	86	2.47	0.00	118	0.015	94	117	108.9	0.78	0.73	15.48	88.6	166.2	162.7	77.1	165.7	247	90	88	86		1.001	6.106	542
1623	263.565	266.969		0.16	0.20	1.19	1.49	0.26	100	100	86	2.51	0.00	120	0.014	98	121	108.2	0.74	0.75	15.56	89.4	167.0	163.4	77.1	166.5	252	90	89	86		1.001	6.266	561
1624	263.719	267.162		0.15	0.19	1.20	1.51	0.26	100	100	86	2.22	0.00	121	0.014	97	119	107.4	0.78	0.72	15.52	90.3	168.0	164.4	77.2	167.5	256	90	91	86		1.001	5.945	538
1625	263.889	267.331		0.17	0.17	1.42	1.09	0.26	100	100	86	1.93	0.00	121	0.016	100	98	106.6	0.81	0.73	15.47	91.3	168.9	165.3	77.2	168.5	260	89	91	86		1.001	6.104	558
1626	264.059	267.496		0.17	0.16	1.44	1.10	0.26	100	100	86	1.88	0.00	122	0.014	107	102	106.0	0.64	0.66	15.54	92.2	169.9	166.2	77.2	169.4	262	89	92	86		1.001	5.459	504
1627	264.227	267.661		0.17	0.17	1.34	1.10	0.26	100	100	86	2.02	0.00	123	0.014	106	102	105.0	0.99	0.72	15.50	93.1	170.9	167.1	77.2	170.3	264	90	92	86		1.001	5.948	554
1628	264.391	267.826		0.16	0.17	1.33	1.10	0.26	101	100	86	2.01	0.00	123	0.015	99	99	104.2	0.72	0.79	15.44	94.2	172.0	168.3	77.2	171.5	267	90	91	86		1.001	6.595	622
1629	264.554	267.992		0.16	0.17	1.33	1.09	0.26	100	100	86	2.01	0.00	124	0.014	103	103	103.4	0.85	0.69	15.48	95.1	172.9	169.1	77.3	172.4	269	88	90	86		1.001	5.696	542
1630	264.718	268.158		0.16	0.17	1.33	1.09	0.26	100	100	86	2.02	0.00	125	0.015	100	100	102.5	0.87	0.77	15.52	96.1	174.0	170.1	77.3	173.4	272	87	88	86		1.001	6.388	614
1631	264.881	268.323		0.16	0.16	1.33	1.09	0.26	100	100	86	2.02	0.00	126	0.015	99	99	101.7	0.85	0.71	15.49	97.3	175.2	171.4	77.3	174.6	274	86	87	86		1.001	5.941	579
1632	265.044	268.488		0.16	0.17	1.33	1.09	0.26	100	100	86	2.01	0.00	126	0.015	99	99	101.1	0.59	0.75	15.42	98.4	176.2	172.4	77.3	175.7	276	85	86	86		1.001	6.265	617
1633	265.207	268.653		0.16	0.17	1.33	1.08	0.26	100	100	86	2.01	0.00	127	0.014	103	103	100.2	0.90	0.75	15.54	99.5	177.4	173.4	77.3	176.8	277	85	86	86		1.001	6.263	624
1634	265.371	268.817		0.16	0.16	1.33	1.08	0.26	100	100	86	2.03	0.00	127	0.015	100	99	99.4	0.79	0.73	15.48	100.5	178.5	174.5	77.4	177.9	278	85	86	86		1.001	6.104	614
1635	265.534	268.981		0.16	0.16	1.33	1.08	0.26	100	100	86	2.04	0.00	127	0.015	99	99	98.6	0.75	0.71	15.52	101.8	179.8	175.7	77.4	179.1	279	85	85	86		1.001	5.941	605
1636	265.697	269.146		0.16	0.17	1.33	1.08	0.26	100	100	86	2.03	0.00	127	0.014	103	103	97.7	0.99	0.71	15.44	102.8	180.8	176.6	77.4	180.2	281	82	83	86		1.001	5.937	611
1637	265.861	269.311		0.16	0.16	1.33	1.08	0.26	100	100	86	2.02	0.00	127	0.015	100	99	97.0	0.68	0.73	15.45	104.0	182.0	177.8	77.4	181.4	281	81	82	86		1.001	6.100	635
1638	266.025	269.476		0.16	0.17	1.33	1.08	0.26	100	100	86	2.00	0.00	113	0.014	102	101	96.5	0.48	0.70	15.50	105.2	183.2	178.9	77.4	182.5	262	77	77	86		1.001	5.781	609
1639	266.189	269.641		0.16	0.17	1.32	1.08	0.26	100	100	86	2.01	0.00	104	0.013	105	104	96.1	0.43	0.74	15.51	106.0	183.9	179.6	77.4	183.4	245	76	77	86		1.001	6.162	654
1640	266.353	269.806		0.16	0.16	1.33	1.08	0.26	100	100	86	2.00	0.00	100	0.013	105	104	95.7	0.34	0.71	15.46	106.4	184.2	180.0	77.4	183.8	234	75	77	86		1.001	5.942	633
1641	266.518	269.971		0.16	0.17	1.32	1.08	0.26	100	100	86	2.00	0.00	98	0.015	98	97	95.5	0.26	0.73	15.42	106.8	184.4	180.2	77.3	184.1	226	74	75	86		1.001	6.102	652
1642	266.682	270.136		0.16	0.17	1.33	1.08	0.26	100	100	85	1.99	0.00	97	0.015	97	97	95.1	0.36	0.73	15.41	106.9	184.6	180.4	77.3	184.2	219	73	74	85		1.001	6.104	653
1643	266.845	270.301		0.16	0.16	1.33	1.08	0.26	100	100	86	2.00	0.00	96	0.014	100	100	95.0	0.14	0.71	15.59	107.0	184.7	180.5	77.4	184.4	213	73	73	86		1.001	5.942	637
1644	267.009	270.467		0.16	0.17	1.33	1.08	0.26	100	100	86	2.01	0.00	95	0.013	104	104	94.7	0.22	0.75	15.52	107.2	184.8	180.5	77.3	184.5	209	74	73	86		1.001	6.265	672
1645	267.173	270.632		0.16	0.17	1.33	1.08	0.26	100	100	86	1.99	0.00	94	0.015	97	96	94.8	-0.05	0.70	15.58	107.3	185.0	180.7	77.3	184.6	205	75	74	86		1.001	5.780	621
1646	267.338	270.797		0.17	0.17	1.32	1.08	0.26	100	100	86	1.99	0.00	94	0.013	105	103	94.6	0.20	0.66	15.50	107.5	185.2	180.9	77.3	184.8	202	77	75	86		1.001	5.455	587
1647	267.502	270.963		0.16	0.17	1.32	1.08	0.26	100	100	86	2.01	0.00	92	0.013	104	104	94.5	0.05	0.75	15.54	107.6	185.2	181.0	77.3	184.9	201	77	76	86		1.001	6.267	675
1648	267.667	271.129		0.16	0.17	1.32	1.08	0.26	100	100	86	1.99	0.00	92	0.013	105	104	94.3	0.24	0.70	15.55	107.7	185.3	181.2	77.3	185.0	199	75	75	86		1.001	5.791	624
1649	267.831	271.294		0.16	0.16	1.32	1.08	0.26	100	100	86	1.99	0.00	91	0.013	104	103	94.3	0.04	0.77	15.48	107.8	185.3	181.2	77.2	185.0	198	73	74	86		1.001	6.419	693
1650	267.996	271.459		0.16	0.17	1.32	1.08	0.26	100	100	86	2.00	0.00	91	0.012	109	107	94.1	0.14	0.75	15.43	107.8	185.4	181.2	77.2	185.1	195	73	74	86		1.001	6.242	674
1651	268.160	271.625		0.16	0.17	1.33	1.08	0.26	100	100	86	2.01	0.00	91	0.014	100	100	94.1	-0.01	0.68	15.39	107.8	185.4	181.2	77.2	185.0	193	74	75	86		1.001	5.617	606
1652	268.324	271.790		0.16	0.17	1.33	1.08	0.26	100	100	86	2.00	0.00	91	0.014	100	99	94.0	0.16	0.71	15.48	107.9	185.4	181.3	77.2	185.1	191	75	75	86		1.001	5.941	642
1653	268.488	271.956		0.16	0.17	1.33	1.08	0.26	100	99	86	1.99	0.00	91	0.013	104	104	94.0	-0.05	0.72	15.52	107.9	185.4	181.2	77.2	185.1	188	76	76	86		1.001	5.943	642
1654	268.653	272.121		0.17	0.16	1.33	1.08	0.26	100	99	86	2.01	0.00	90	0.014	101	100	94.0	0.05	0.73	15.52	107.9	185.4	181.3	77.2	185.1	186	77	76	86		1.001	6.104	659
1655	268.817	272.287		0.16	0.17	1.33	1.08	0.26	100	99	86	1.99	0.00	90	0.014	100	100	93.9	0.10	0.75	15.51	107.9	185.4	181.3	77.2	185.1	184	77	77	86		1.001	6.266	677
1656	268.982	272.452		0.17	0.17	1.32	1.08	0.26	100	99	86	2.01	0.00	90	0.014	101	100	93.8	0.12	0.68	15.49	107.9	185.4	181.2	77.2	185.1	182	78	77	86		1.001	5.616	607
1657	269.146	272.619		0.16	0.17	1.32	1.08	0.26	100	99	86	2.00	0.00	90	0.015	97	97	93.8	0.00	0.71	15.50	108.0	185.4	181.2	77.1	185.1	180	78	77	86		1.001	5.937	642
1658	269.311	272.784		0.16	0.16	1.33	1.09	0.26	100	99	86	1.99	0.00	90	0.014	101	100	93.8	0.01	0.71	15.50	107.9	185.3	181.2	77.1	185.0	178	79	78	86		1.001	5.938	641
1659	269.475	272.950		0.16	0.17	1.33	1.08	0.26	100	99	85	2.01	0.00	90	0.014	100	100	93.7	0.01	0.66	15.46	107.9	185.3	181.1	77.1	185.0	176	79	79	85		1.001	5.518	596
1660	269.638	273.115		0.16	0.17	1.33	1.08	0.26	100	99	86	1.99	0.00	90	0.014	100	100	93.8	-0.05	0.71	15.52	107.8	185.3	181.1	77.1	185.0	174	80	79	86		1.001	5.941	641
1661	269.803	273.281		0.17	0.17	1.33	1.08	0.26	100	99	86	2.01	0.00	90	0.015	97	97	93.8	0.02	0.72	15.56	107.8	185.3	181.1	77.1	185.0	172	81	80	86		1.001	5.945	642
1662	269.967	273.446		0.16	0.17	1.33	1.08	0.26	100	99	86	1.99	0.00	90	0.014	100	100	93.7	0.10	0.73	15.51	107.8	185.3	181.0	77.1	184.9	171	81	80	86		1.001	6.107	659
1663	270.132	273.612		0.17	0.17	1.33	1.08	0.26	100	99	85	2.01	0.00	89	0.014	101	100	93.8	-0.15	0.73	15.40	107.8	185.2	181.0	77.1	184.9	169	82	81	85		1.001	6.107	659
1664	270.296	273.777		0.16	0.16	1.32	1.08	0.26	100	99	86	2.00	0.00	90	0.013	104	103	93.7	0.09	0.70	15.55	107.7	185.1	181.0	77.1	184.8	167	82	81	86		1.001	5.782	623

Elapsed Time	Particulate Sampling Data																	Fuel Weight, lb		Flow, gpm		Temperature Data, oF													
	Gas Meter Cubic Feet (1)	Gas Meter Cubic Feet (2)	Gas Meter Cubic Feet (amb)	Sample Rate, cfm (1)	Sample Rate, cfm (2)	Orifice dH (1)	Orifice dH (2)	Orifice dH (amb)	Meter oF (1)	Meter oF (2)	Meter oF (amb)	Meter Vac. In. Hg. (1)	Meter Vac. In. Hg. (2)	Dilution Tunnel Temp.	Dilution Tunnel dP	Pro. Rate (%) (1)	Pro. Rate (%) (2)	Scale Reading	Weight Change	Load Side Liquid Flow Rate	Boiler Side Liquid Flow Rate (optional)	Thermopile ΔT	Boiler to Heat Exch. Temp.	Heat Exch to Boiler Temp.	Inlet Load Temp.	Outlet Load Temp.	Stack	Filter (1)	Filter (2)	Ambient		Specific Heat of Inlet Water (BTU/lb-°F)	Mass Flow Rate of Inlet Water (lb/min)	Heat Output, Btu
1665	270.461	273.943		0.17	0.17	1.33	1.08	0.26	100	99	86	2.00	0.00	89	0.012	109	108	93.7	0.02	0.75	15.46	107.7	185.1	181.0	77.1	184.8	166	82	82	86		1.001	6.267	675
1666	270.625	274.108		0.16	0.17	1.33	1.08	0.26	100	99	85	1.99	0.00	89	0.014	100	99	93.7	-0.01	0.73	15.44	107.6	185.1	180.9	77.1	184.7	164	83	82	85		1.001	6.105	658
1667	270.789	274.274		0.16	0.17	1.33	1.08	0.26	100	99	85	2.00	0.00	89	0.013	104	104	93.8	-0.03	0.74	15.43	107.5	185.0	180.9	77.1	184.6	163	83	82	85		1.001	6.115	658
1668	270.953	274.440		0.16	0.17	1.33	1.08	0.26	100	99	85	2.01	0.00	89	0.016	94	94	93.7	0.05	0.68	15.49	107.5	184.9	180.7	77.1	184.6	162	83	82	85		1.001	5.620	605
1669	271.117	274.606		0.16	0.17	1.33	1.08	0.26	100	99	85	2.01	0.00	89	0.014	100	100	93.6	0.11	0.72	15.47	107.4	184.8	180.7	77.1	184.5	160	83	83	85		1.001	5.943	639
1670	271.281	274.771		0.16	0.17	1.33	1.08	0.26	100	99	85	1.99	0.00	89	0.013	104	103	93.8	-0.21	0.66	15.40	107.3	184.8	180.6	77.1	184.5	159	84	83	85		1.001	5.479	589
1671	271.446	274.936		0.17	0.16	1.33	1.08	0.26	100	99	85	2.01	0.00	89	0.013	105	103	93.6	0.25	0.73	15.37	107.3	184.7	180.5	77.1	184.4	158	84	83	85		1.001	6.105	655
1672	271.610	275.102		0.16	0.17	1.32	1.08	0.26	100	99	85	2.00	0.00	89	0.014	100	100	93.6	-0.06	0.73	15.43	107.2	184.6	180.4	77.1	184.3	156	84	83	85		1.001	6.103	655
1673	271.775	275.267		0.16	0.17	1.32	1.08	0.26	100	99	86	2.01	0.00	89	0.015	97	96	93.6	-0.01	0.77	15.43	107.1	184.5	180.3	77.1	184.2	155	84	84	86		1.001	6.426	689
1674	271.939	275.432		0.16	0.17	1.32	1.09	0.26	100	99	85	2.00	0.00	89	0.015	97	96	93.6	0.07	0.70	15.50	107.1	184.5	180.2	77.1	184.2	155	84	84	85		1.001	5.780	620
1675	272.104	275.598		0.16	0.17	1.33	1.08	0.26	100	99	85	2.00	0.00	89	0.013	105	104	93.6	-0.09	0.75	15.47	107.0	184.4	180.2	77.1	184.1	153	85	84	85		1.001	6.266	671
1676	272.267	275.763		0.16	0.16	1.33	1.08	0.26	100	99	85	1.99	0.00	89	0.013	103	103	93.6	0.07	0.77	15.52	106.9	184.3	180.2	77.1	184.0	153	85	84	85		1.001	6.419	687
1677	272.431	275.929		0.16	0.17	1.33	1.08	0.26	100	99	85	2.01	0.00	89	0.014	100	100	93.7	-0.08	0.72	15.47	106.8	184.2	180.0	77.1	183.9	152	85	84	85		1.001	5.948	636
1678	272.595	276.095		0.16	0.17	1.33	1.08	0.26	100	99	85	2.00	0.00	89	0.014	100	100	93.6	0.04	0.70	15.45	106.7	184.1	180.0	77.1	183.8	151	85	84	85		1.001	5.779	617
1679	272.760	276.261		0.16	0.17	1.33	1.08	0.26	100	99	85	1.99	0.00	89	0.014	101	100	93.7	-0.12	0.64	15.50	106.7	184.0	179.9	77.1	183.7	150	85	84	85		1.001	5.301	566
1680	272.924	276.426		0.16	0.16	1.32	1.08	0.26	100	99	85	2.00	0.00	89	0.015	97	96	93.6	0.15	0.75	15.52	106.6	183.9	179.8	77.0	183.6	149	85	84	85		1.001	6.267	669
1681	273.089	276.592		0.17	0.17	1.32	1.08	0.26	100	99	85	2.00	0.00	89	0.013	105	104	93.5	0.10	0.73	15.45	106.5	183.9	179.7	77.0	183.6	148	85	85	85		1.001	6.108	651
1682	273.253	276.757		0.16	0.17	1.33	1.08	0.26	100	99	85	1.99	0.00	89	0.014	100	99	93.6	-0.07	0.70	15.41	106.4	183.7	179.6	77.0	183.5	148	85	85	85		1.001	5.784	616
1683	273.418	276.922		0.17	0.17	1.33	1.08	0.26	100	99	85	1.99	0.00	88	0.014	101	99	93.6	-0.02	0.70	15.55	106.3	183.6	179.5	77.0	183.3	147	85	85	85		1.001	5.782	615
1684	273.582	277.087		0.16	0.16	1.33	1.08	0.26	100	99	85	1.99	0.00	88	0.013	104	103	93.6	-0.02	0.68	15.47	106.2	183.5	179.4	77.0	183.2	146	85	85	85		1.001	5.621	598
1685	273.745	277.253		0.16	0.17	1.33	1.08	0.26	100	99	85	2.00	0.00	88	0.015	96	97	93.6	0.03	0.70	15.50	106.0	183.4	179.2	77.0	183.1	145	85	85	85		1.001	5.783	614
1686	273.910	277.418		0.17	0.17	1.33	1.08	0.26	100	99	85	1.99	0.00	88	0.014	101	99	93.5	0.08	0.73	15.49	106.0	183.3	179.2	77.0	183.0	145	85	85	85		1.001	6.106	648
1687	274.074	277.584		0.16	0.17	1.33	1.08	0.26	100	99	85	2.00	0.00	88	0.012	108	108	93.6	-0.07	0.75	15.46	105.8	183.2	179.0	77.0	182.9	144	85	85	85		1.001	6.268	664
1688	274.238	277.750		0.16	0.17	1.33	1.08	0.26	100	99	85	2.01	0.00	88	0.014	100	100	93.5	0.11	0.69	15.53	105.7	183.1	178.9	77.0	182.8	144	85	85	85		1.001	5.707	604
1689	274.403	277.916		0.17	0.17	1.32	1.08	0.26	100	99	85	1.99	0.00	88	0.012	109	108	93.5	-0.09	0.68	15.50	105.6	183.0	178.8	77.0	182.7	143	85	85	85		1.001	5.623	595
1690	274.568	278.081		0.16	0.17	1.32	1.08	0.26	100	99	85	1.99	0.00	88	0.014	101	99	93.5	0.04	0.72	15.45	105.5	182.8	178.7	77.0	182.5	142	85	85	85		1.001	5.947	628
1691	274.732	278.246		0.16	0.16	1.33	1.08	0.26	100	99	85	2.01	0.00	88	0.014	100	99	93.6	-0.12	0.68	15.49	105.4	182.7	178.6	77.0	182.4	142	85	85	85		1.001	5.622	593
1692	274.896	278.411		0.16	0.17	1.33	1.08	0.26	100	99	85	2.01	0.00	88	0.014	100	99	93.5	0.08	0.75	15.49	105.3	182.6	178.5	77.0	182.3	141	85	85	85		1.001	6.269	661
1693	275.060	278.576		0.16	0.17	1.33	1.08	0.26	100	99	85	1.99	0.00	88	0.013	104	103	93.6	-0.09	0.77	15.43	105.2	182.5	178.4	77.0	182.2	140	85	85	85		1.001	6.432	677
1694	275.224	278.742		0.16	0.17	1.33	1.08	0.26	100	99	85	2.01	0.00	88	0.014	100	100	93.6	0.05	0.75	15.44	105.1	182.4	178.3	77.0	182.1	140	85	85	85		1.001	6.269	660
1695	275.388	278.907		0.16	0.16	1.33	1.08	0.26	100	99	85	2.01	0.00	88	0.014	100	99	93.6	0.02	0.72	15.62	105.0	182.2	178.2	77.0	181.9	139	85	85	85		1.001	5.946	625
1696	275.552	279.072		0.16	0.17	1.33	1.08	0.26	100	99	85	2.01	0.00	88	0.013	104	103	93.6	-0.05	0.73	15.42	104.8	182.1	178.1	77.0	181.8	139	85	85	85		1.001	6.083	638
1697	275.717	279.238		0.16	0.17	1.33	1.08	0.26	100	99	85	1.99	0.00	88	0.013	104	104	93.6	-0.01	0.70	15.60	104.7	182.0	177.9	77.0	181.7	138	85	85	85		1.001	5.810	609
1698	275.881	279.404		0.16	0.17	1.33	1.08	0.26	100	99	85	2.01	0.00	88	0.014	100	100	93.6	0.00	0.68	15.55	104.6	181.8	177.8	77.0	181.6	137	85	85	85		1.001	5.682	595
1699	276.046	279.569		0.17	0.17	1.32	1.08	0.26	100	99	85	2.01	0.00	88	0.013	104	103	93.6	0.04	0.75	15.49	104.5	181.7	177.7	76.9	181.4	137	85	85	85		1.001	6.206	649
1700	276.210	279.735		0.16	0.17	1.33	1.07	0.26	100	99	85	1.99	0.00	88	0.015	97	97	93.6	0.01	0.73	15.49	104.4	181.6	177.5	76.9	181.3	136	85	85	85		1.001	6.108	638
1701	276.375	279.900		0.17	0.16	1.33	1.08	0.26	100	99	85	2.01	0.00	88	0.012	109	107	93.6	-0.01	0.74	15.45	104.2	181.5	177.4	77.0	181.2	137	85	85	85		1.001	6.109	637
1702	276.538	280.065		0.16	0.17	1.33	1.08	0.26	100	99	85	2.00	0.00	88	0.014	99	99	93.6	-0.03	0.64	15.55	104.1	181.3	177.3	76.9	181.0	136	85	85	85		1.001	5.298	552
1703	276.702	280.230		0.16	0.17	1.33	1.08	0.26	99	99	85	2.00	0.00	88	0.014	100	99	93.5	0.08	0.70	15.58	104.0	181.2	177.2	76.9	180.9	135	85	85	85		1.001	5.786	602
1704	276.867	280.395		0.17	0.16	1.33	1.08	0.26	99	99	85	2.01	0.00	88	0.013	105	103	93.7	-0.20	0.75	15.52	103.8	181.1	177.0	76.9	180.8	134	85	85	85		1.001	6.273	652
1705	277.031	280.561		0.16	0.17	1.33	1.08	0.26	99	98	85	1.99	0.00	88	0.014	100	100	93.4	0.28	0.74	15.54	103.7	180.9	176.9	76.9	180.6	134	85	85	85		1.001	6.111	634
1706	277.195	280.726		0.16	0.17	1.33	1.08	0.26	99	98	85	2.00	0.00	88	0.013	104	103	94.0	-0.52	0.72	15.54	103.6	180.8	176.8	76.9	180.5	133	85	85	85		1.001	5.945	616
1707	277.360	280.892		0.17	0.17	1.32	1.07	0.26	99	98	85	2.02	0.00	94	0.015	98	97	93.6	0.41	0.68	15.43	103.5	180.6	176.7	76.9	180.4	158	85	86	85		1.001	5.661	587
1708	277.524	281.057		0.16	0.17	1.33	1.08	0.26	99	98	85	1.99	0.00	92	0.013	104	104	93.2	0.42	0.66	15.61	103.3	180.5	176.5	76.9	180.2	157	85	86	85		1.001	5.498	569
1709	277.689	281.222		0.17	0.16	1.32	1.08	0.26	99	98	85	2.00	0.00	89	0.014	101	100	93.1	0.01	0.72	15.51	103.2	180.3	176.3	76.9	180.0	151	85	85	85		1.001	5.969	616
1710	277.852	281.387		0.16	0.17	1.32	1.08	0.26	99	98	85	2.01	0.00	88	0.014	100	100	93.1	0.06	0.73	15.47	103.0	180.2	176.2	76.9	179.9	148	85	86	85		1.001	6.105	630
1711	278.016	281.552		0.16	0.17	1.34	1.08	0.26	99	98	85	1.99	0.00	88	0.015	97	96	93.0	0.11	0.72	15.42	102.9	180.1	176.1	76.9	179.8	145	85	86	85		1.001	5.947	613
1712	278.181	281.718		0.16	0.17	1.33	1.08	0.26	99	98	85	1.99	0.00	88	0.014	101	100	93.1	-0.09	0.73	15.55	102.8	179.9	175.9	76.9	179.6	143	85	86	85		1.001	6.107	628
1713	278.345	281.883		0.16	0.16	1.33	1.08	0.26	99	98	85	2.00	0.00	88	0.014	100	100	93.1	0.00	0.75	15.45	102.7	179.8	175.8	76.9	179.5	142	85	86	85		1.001	6.273	645
1714	278.509	282.049		0.16	0.17	1.33	1.09	0.26	99	98	85	2.00	0.00	88	0.011	113	113	93.0	0.06	0.72	15.51	102.5	179.7	175.7	76.9	179.4	140	85	86	85		1.001	5.946	610
1715	278.674	282.214		0.16	0.17	1.32	1.08	0.26	99	98	85	2.00	0.00	88	0.014	101	100	93.0	-0.03	0.73	15.54	102.3	179.5	175.5	76.9	179.2	138	85	86	85		1.001	6.108	626
1716	278.839	282.380		0.17	0.17	1.32	1.08	0.26	99	98	85	1.99	0.00	88	0.013	105	104	93.0	0.02	0.73	15.46	102.2	179.4	175.4	76.9	179.1	137	85	85	85		1.001	6.104	624
1717	279.003	282.546		0.16	0.17	1.33	1.08	0.26	99	98	85	2.00	0.00	88	0.014	100	100	93.0	0.00	0.68	15.47	102.0	179.2	175.3	76.9	178.9	136	85	85	85		1.001	5.618	574
1718	279.167	282.712		0.16	0.17	1.33	1.08	0.26	99	98	85	2.01	0.00	88	0.013	104	104	93.0	0.01	0.70	15.48	101.9	179.1	175.1	76.9	178.8	135	85	86	85		1.001	5.786	590
1719	279.331	282.877		0.16	0.17	1.33	1.08	0.26	99	98	85	2.00	0.00	88	0.013	104	103	93.1	-0.08	0.75	15.44	101.8	179.0	175.0	76.9	178.7	134	85	86	85		1.001	6.271	639
1720	279.495	283.042		0.16	0.16	1.33	1.08	0.26	99	98	85	2.01	0.00	88	0.013	104	103	93.2	-0.08	0.72	15.43	101.6	178.9	174.9	76.9	178.5	133	85	85	85		1.001	5.946	605
1721	279.659	283.207		0.16	0.17	1.33	1.08	0.26	99	98	85	2.01	0.00	88	0.014	100	100	93.1	0.03	0.73	15.47	101.5	178.7	174.8	76.9	178.4	132	85	85	85		1.001	6.108	621
1722	279.824	283.373		0.17	0.17	1.33	1.08	0.26	99	98	85	2.01	0.00	87	0.013	105	104	93.2	-0.07	0.68	15.60	101.4	178.5	174.6	76.9	178.2	131	85	85	85		1.001	5.624	571
1723	279.988	283.538		0.16	0.17	1.33	1.08	0.26	99	98	85	2.00	0.00	87	0.012	108	107	93.0	0.17	0.75	15.47	101.2	178.3	174.5	76.8	178.1	131	85	85	85		1.001	6.273	636
1724	280.153	283.704		0.17	0.17	1.32	1.09	0.26	99	98	85	1.99	0.00	87	0.014	101	100	93.1	-0.09	0.70	15.40	101.1	178.2	174.3	76.9	178.0	130	85	85	85		1.001	5.786	586
1725	280.318	283.869		0.16	0.17	1.33	1.08	0.26	99	98	85	2.00	0.00	87	0.013	105	103	93.0	0.10	0.70	15.56	101.0	178.1	174.2	76.9	177.9	129	85	85	85		1.001	5.787	585
1726	280.482	284.035		0.16	0.17	1.33	1.08	0.26	99	98	85	2.01	0.00	87	0.012	108	108	93.1	-0.04	0.75	15.57	100.8	177.9	174.0	76.9	177.7	129	85	85	85		1.001	6.273	633

Elapsed Time	Particulate Sampling Data																	Fuel Weight, lb		Flow, gpm		Temperature Data, oF													
	Gas Meter Cubic Feet (1)	Gas Meter Cubic Feet (2)	Gas Meter Cubic Feet (amb)	Sample Rate, cfm (1)	Sample Rate, cfm (2)	Orifice dH (1)	Orifice dH (2)	Orifice dH (amb)	Meter oF (1)	Meter oF (2)	Meter oF (amb)	Meter Vac. In. Hg. (1)	Meter Vac. In. Hg. (2)	Dilution Tunnel Temp.	Dilution Tunnel dP	Pro. Rate (%) (1)	Pro. Rate (%) (2)	Scale Reading	Weight Change	Load Side Liquid Flow Rate	Boiler Side Liquid Flow Rate (optional)	Thermopile ΔT	Boiler to Heat Exch. Temp.	Heat Exch to Boiler Temp.	Inlet Load Temp.	Outlet Load Temp.	Stack	Filter (1)	Filter (2)	Ambient		Specific Heat of Inlet Water (BTU/lb-°F)	Mass Flow Rate of Inlet Water (lb/min)	Heat Output, Btu
1727	280.646	284.201		0.16	0.17	1.33	1.08	0.26	99	98	85	2.00	0.00	87	0.014	100	100	93.1	0.00	0.77	15.47	100.6	177.8	174.0	76.9	177.6	128	85	85	85		1.001	6.398	645
1728	280.810	284.367		0.16	0.17	1.33	1.08	0.26	99	98	85	2.00	0.00	87	0.013	104	104	93.0	0.03	0.62	15.51	100.6	177.7	173.9	76.9	177.5	128	85	85	85		1.001	5.146	518
1729	280.974	284.532		0.16	0.16	1.33	1.08	0.26	99	98	85	2.00	0.00	87	0.014	100	99	93.2	-0.15	0.70	15.46	100.4	177.5	173.7	76.9	177.2	127	85	85	85		1.001	5.786	581
1730	281.139	284.697		0.17	0.17	1.33	1.08	0.26	99	98	85	2.01	0.00	87	0.014	101	99	93.1	0.09	0.75	15.53	100.3	177.4	173.6	76.8	177.1	127	85	85	85		1.001	6.270	630
1731	281.303	284.862		0.16	0.17	1.33	1.08	0.26	99	98	85	2.00	0.00	87	0.014	100	99	93.0	0.05	0.70	15.43	100.2	177.2	173.4	76.8	177.0	126	85	85	85		1.001	5.788	581
1732	281.468	285.028		0.17	0.17	1.33	1.08	0.26	99	98	85	1.99	0.00	87	0.014	101	100	93.1	-0.11	0.77	15.54	100.0	177.1	173.3	76.8	176.8	126	85	85	85		1.001	6.436	644
1733	281.632	285.193		0.16	0.16	1.33	1.08	0.26	99	98	85	2.00	0.00	87	0.014	100	99	93.0	0.14	0.75	15.53	99.8	176.9	173.1	76.8	176.7	126	85	85	85		1.001	6.273	627
1734	281.797	285.359		0.17	0.17	1.33	1.08	0.26	99	98	85	1.99	0.00	87	0.012	109	108	93.1	-0.13	0.75	15.49	99.7	176.8	173.0	76.8	176.5	126	85	85	85		1.001	6.272	626
1735	281.961	285.525		0.16	0.17	1.33	1.08	0.26	99	98	85	1.99	0.00	87	0.015	97	97	93.1	0.06	0.70	15.52	99.5	176.6	172.8	76.8	176.4	125	85	85	85		1.001	5.780	576
1736	282.125	285.690		0.16	0.17	1.34	1.09	0.26	99	98	85	2.00	0.00	87	0.013	104	103	93.0	0.03	0.70	15.51	99.5	176.5	172.7	76.8	176.2	125	85	85	85		1.001	5.818	579
1737	282.289	285.856		0.16	0.17	1.33	1.08	0.26	99	98	85	2.00	0.00	87	0.015	97	97	93.3	-0.22	0.77	15.44	99.4	176.4	172.6	76.8	176.1	125	85	85	85		1.001	6.400	637
1738	282.453	286.022		0.16	0.17	1.33	1.08	0.26	99	98	85	2.01	0.00	93	0.013	104	104	93.0	0.24	0.70	15.50	99.1	176.2	172.4	76.8	175.9	149	85	86	85		1.001	5.789	575
1739	282.618	286.187		0.17	0.17	1.33	1.08	0.26	99	98	84	1.99	0.00	90	0.013	105	103	93.1	-0.06	0.75	15.55	98.9	176.0	172.2	76.8	175.7	147	85	85	84		1.001	6.265	620
1740	282.782	286.352		0.16	0.16	1.33	1.08	0.26	99	98	85	2.00	0.00	88	0.014	100	100	93.0	0.07	0.72	15.50	98.8	175.8	172.0	76.8	175.6	141	85	85	85		1.001	5.950	589
1741	282.947	286.517		0.17	0.17	1.33	1.08	0.26	99	98	85	2.01	0.00	87	0.012	109	107	92.9	0.14	0.68	15.45	98.7	175.7	171.9	76.8	175.4	138	85	85	85		1.001	5.625	556
1742	283.111	286.683		0.16	0.17	1.33	1.08	0.26	99	98	85	2.01	0.00	87	0.013	104	104	92.9	0.01	0.77	15.50	98.6	175.6	171.8	76.8	175.3	135	85	85	85		1.001	6.436	635
1743	283.276	286.849		0.17	0.17	1.33	1.09	0.26	99	98	84	2.00	0.00	87	0.013	105	104	93.0	-0.14	0.72	15.53	98.4	175.4	171.6	76.8	175.2	134	85	85	84		1.001	5.951	586
1744	283.439	287.014		0.16	0.17	1.33	1.09	0.26	99	98	84	2.01	0.00	87	0.014	99	99	92.9	0.09	0.76	15.54	98.3	175.2	171.4	76.7	175.0	132	85	85	84		1.001	6.278	618
1745	283.604	287.180		0.16	0.17	1.33	1.09	0.26	99	98	84	1.99	0.00	87	0.013	105	104	92.9	-0.01	0.74	15.52	98.2	175.1	171.3	76.7	174.9	131	85	85	84		1.001	6.113	601
1746	283.768	287.345		0.16	0.17	1.33	1.08	0.26	99	98	84	1.99	0.00	87	0.015	97	96	92.9	0.01	0.75	15.48	98.0	175.0	171.2	76.7	174.7	130	85	85	84		1.001	6.229	611
1747	283.933	287.511		0.17	0.17	1.33	1.09	0.26	99	98	84	2.00	0.00	87	0.015	97	97	92.9	0.00	0.71	15.46	97.9	174.8	171.0	76.7	174.6	129	85	85	84		1.001	5.860	574
1748	284.097	287.677		0.16	0.17	1.33	1.08	0.26	99	98	84	2.00	0.00	87	0.013	104	104	92.8	0.13	0.75	15.64	97.7	174.7	171.0	76.7	174.5	128	85	85	84		1.001	6.274	614
1749	284.262	287.842		0.17	0.16	1.32	1.08	0.26	99	98	84	2.01	0.00	87	0.015	97	96	92.9	-0.09	0.68	15.48	97.6	174.6	170.8	76.7	174.3	127	85	85	84		1.001	5.626	550
1750	284.426	288.008		0.16	0.17	1.33	1.08	0.26	99	98	84	2.00	0.00	87	0.014	100	100	92.9	-0.01	0.74	15.52	97.5	174.4	170.7	76.7	174.2	127	85	85	84		1.001	6.116	597
1751	284.590	288.173		0.16	0.17	1.33	1.08	0.26	99	98	84	2.00	0.00	87	0.016	94	93	92.9	0.04	0.70	15.54	97.3	174.3	170.6	76.7	174.0	126	85	85	84		1.001	5.787	564
1752	284.754	288.338		0.16	0.17	1.33	1.08	0.26	99	98	84	2.01	0.00	87	0.014	100	99	92.8	0.01	0.74	15.53	97.2	174.1	170.4	76.7	173.9	126	85	85	84		1.001	6.114	595
1753	284.918	288.504		0.16	0.17	1.34	1.08	0.26	99	98	84	2.00	0.00	87	0.013	104	104	92.8	0.01	0.72	15.52	97.0	174.0	170.2	76.7	173.7	125	85	85	84		1.001	5.950	578
1754	285.082	288.669		0.16	0.16	1.33	1.09	0.26	99	98	84	2.00	0.00	87	0.014	100	99	92.9	-0.06	0.73	15.47	96.9	173.8	170.1	76.7	173.6	125	85	85	84		1.001	6.098	591
1755	285.247	288.835		0.17	0.17	1.33	1.09	0.26	99	97	84	1.99	0.00	87	0.014	101	100	92.9	0.04	0.76	15.45	96.7	173.6	169.8	76.7	173.4	124	85	85	84		1.001	6.293	609
1756	285.411	289.000		0.16	0.17	1.33	1.09	0.26	99	98	84	2.01	0.00	87	0.014	100	99	92.9	0.00	0.76	15.49	96.6	173.5	169.8	76.7	173.2	123	85	85	84		1.001	6.276	607
1757	285.576	289.166		0.17	0.17	1.33	1.09	0.26	99	98	84	1.99	0.00	87	0.014	101	100	92.9	-0.07	0.70	15.47	96.5	173.3	169.6	76.6	173.1	123	85	85	84		1.001	5.789	559
1758	285.741	289.332		0.16	0.17	1.33	1.08	0.26	99	97	84	2.01	0.00	87	0.012	109	108	92.9	0.05	0.76	15.51	96.3	173.2	169.4	76.6	172.9	123	85	85	84		1.001	6.276	605
1759	285.905	289.498		0.16	0.17	1.33	1.08	0.26	99	97	84	2.01	0.00	87	0.014	100	100	92.9	-0.04	0.70	15.47	96.1	173.0	169.2	76.6	172.7	122	85	85	84		1.001	5.790	557
1760	286.069	289.663		0.16	0.17	1.33	1.08	0.26	99	97	84	2.01	0.00	87	0.013	104	103	92.9	0.01	0.66	15.47	96.0	172.9	169.2	76.6	172.6	123	85	85	84		1.001	5.466	525
1761	286.233	289.829		0.16	0.17	1.33	1.08	0.26	99	97	84	2.00	0.00	87	0.014	100	100	92.8	0.10	0.70	15.46	95.8	172.7	169.0	76.6	172.5	123	85	85	84		1.001	5.791	556
1762	286.397	289.994		0.16	0.17	1.33	1.09	0.26	99	97	84	1.99	0.00	87	0.014	100	100	92.8	0.02	0.74	15.63	95.7	172.6	168.8	76.6	172.3	122	85	85	84		1.001	6.113	586
1763	286.561	290.159		0.16	0.16	1.33	1.08	0.26	99	97	84	2.01	0.00	87	0.014	100	100	92.8	-0.01	0.70	15.49	95.6	172.4	168.7	76.6	172.2	121	85	85	84		1.001	5.788	554
1764	286.726	290.325		0.17	0.17	1.33	1.09	0.26	99	97	84	2.00	0.00	86	0.015	97	97	93.0	-0.22	0.68	15.54	95.4	172.3	168.5	76.6	172.0	121	85	85	84		1.001	5.627	537
1765	286.891	290.490		0.17	0.17	1.33	1.09	0.26	98	97	84	2.01	0.00	87	0.014	101	100	92.9	0.15	0.71	15.51	95.3	172.1	168.4	76.6	171.9	121	84	85	84		1.001	5.898	563
1766	287.055	290.656		0.16	0.17	1.33	1.08	0.26	99	97	84	1.99	0.00	87	0.014	100	100	92.8	0.03	0.71	15.52	95.1	172.0	168.3	76.6	171.7	120	84	85	84		1.001	5.939	566
1767	287.219	290.821		0.16	0.17	1.33	1.08	0.26	98	97	84	2.01	0.00	86	0.014	100	100	92.9	-0.02	0.70	15.46	95.0	171.8	168.2	76.6	171.6	120	84	85	84		1.001	5.791	551
1768	287.384	290.987		0.17	0.17	1.33	1.08	0.26	98	97	84	2.00	0.00	87	0.014	101	100	93.0	-0.17	0.77	15.44	94.8	171.7	168.0	76.6	171.4	120	84	85	84		1.001	6.438	611
1769	287.547	291.153		0.16	0.17	1.33	1.08	0.26	98	97	84	2.00	0.00	92	0.015	97	97	93.1	-0.05	0.70	15.48	94.7	171.5	167.8	76.6	171.3	142	85	85	84		1.001	5.790	549
1770	287.711	291.317		0.16	0.16	1.33	1.08	0.26	98	97	84	1.99	0.00	89	0.012	109	107	92.8	0.26	0.68	15.47	94.6	171.4	167.7	76.5	171.1	140	84	85	84		1.001	5.628	533
1771	287.875	291.483		0.16	0.17	1.33	1.08	0.26	98	97	84	1.99	0.00	87	0.012	108	108	92.8	0.07	0.79	15.49	94.4	171.2	167.5	76.6	170.9	135	84	85	84		1.001	6.602	624
1772	288.040	291.648		0.17	0.17	1.33	1.09	0.26	98	97	84	1.99	0.00	87	0.015	97	96	92.8	-0.07	0.74	15.44	94.2	171.0	167.3	76.6	170.8	132	84	85	84		1.001	6.116	577
1773	288.204	291.813		0.16	0.16	1.33	1.08	0.26	98	97	84	2.01	0.00	87	0.014	100	100	92.9	-0.03	0.72	15.48	94.1	170.9	167.3	76.5	170.7	129	84	85	84		1.001	5.955	561
1774	288.369	291.978		0.17	0.17	1.33	1.08	0.26	98	97	84	2.00	0.00	87	0.014	101	100	92.7	0.11	0.79	15.59	94.0	170.7	167.1	76.5	170.5	128	84	85	84		1.001	6.604	621
1775	288.533	292.144		0.16	0.17	1.33	1.09	0.26	98	97	84	1.99	0.00	86	0.013	104	104	92.9	-0.12	0.66	15.53	93.9	170.6	167.0	76.5	170.4	126	84	85	84		1.001	5.476	515
1776	288.698	292.309		0.16	0.17	1.33	1.08	0.26	98	97	84	2.01	0.00	86	0.015	97	96	92.8	0.10	0.74	15.52	93.7	170.5	166.8	76.5	170.2	125	84	85	84		1.001	6.117	574
1777	288.862	292.475		0.16	0.17	1.34	1.09	0.26	98	97	84	2.00	0.00	86	0.013	104	104	92.8	-0.02	0.76	15.42	93.6	170.3	166.7	76.5	170.1	124	84	85	84		1.001	6.276	588
1778	289.025	292.641		0.16	0.17	1.34	1.08	0.26	98	97	84	1.99	0.00	86	0.014	100	100	92.7	0.07	0.66	15.57	93.4	170.2	166.6	76.5	169.9	124	84	85	84		1.001	5.465	511
1779	289.190	292.807		0.17	0.17	1.33	1.08	0.26	98	97	84	2.01	0.00	86	0.014	101	100	92.8	-0.07	0.81	15.50	93.3	170.0	166.4	76.5	169.8	123	84	85	84		1.001	6.762	631
1780	289.354	292.972		0.16	0.16	1.33	1.08	0.26	98	97	84	2.01	0.00	86	0.014	100	100	92.7	0.08	0.70	15.61	93.2	169.9	166.3	76.5	169.7	122	84	85	84		1.001	5.790	540
1781	289.519	293.137		0.17	0.17	1.33	1.08	0.26	98	97	84	1.99	0.00	86	0.013	105	103	92.7	-0.01	0.68	15.53	93.0	169.7	166.2	76.5	169.5	122	84	85	84		1.001	5.629	524
1782	289.683	293.302		0.16	0.17	1.32	1.08	0.26	98	97	84	1.99	0.00	86	0.013	104	103	92.8	-0.13	0.72	15.53	92.9	169.6	166.0	76.5	169.4	122	84	85	84		1.001	5.955	554
1783	289.848	293.468		0.17	0.17	1.33	1.09	0.26	98	97	84	1.99	0.00	86	0.015	97	97	92.7	0.18	0.70	15.50	92.7	169.4	165.8	76.5	169.2	121	84	85	84		1.001	5.792	537
1784	290.012	293.633		0.16	0.16	1.33	1.09	0.26	98	97	84	1.99	0.00	86	0.015	97	96	93.0	-0.33	0.69	15.48	92.5	169.3	165.8	76.5	169.1	120	84	85	84		1.001	5.725	530
1785	290.177	293.799		0.17	0.17	1.33	1.09	0.26	98	97	84	2.00	0.00	86	0.014	101	100	92.8	0.24	0.72	15.53	92.4	169.1	165.6	76.5	168.9	120	84	85	84		1.001	5.973	552
1786	290.340	293.964		0.16	0.17	1.34	1.08	0.26	98	97	84	2.01	0.00	86	0.014	100	100	92.8	-0.05	0.74	15.56	92.2	169.0	165.5	76.5	168.7	120	84	84	84		1.001	6.115	565
1787	290.505	294.130		0.17	0.17	1.34	1.09	0.26	98	97	84	2.01	0.00	86	0.014	101	100	92.7	0.08	0.70	15.44	92.1	168.8	165.3	76.5	168.6	120	84	84	84		1.001	5.792	534
1788	290.669	294.296		0.16	0.17	1.34	1.08	0.26	98	97	84	2.01	0.00	86	0.014	100	100	92.8	-0.03	0.77	15.48	91.9	168.6	165.1	76.5	168.4	119	84	85	84		1.001	6.440	593

Elapsed Time	Particulate Sampling Data																	Fuel Weight, lb		Flow, gpm		Temperature Data, oF													
	Gas Meter Cubic Feet (1)	Gas Meter Cubic Feet (2)	Gas Meter Cubic Feet (amb)	Sample Rate, cfm (1)	Sample Rate, cfm (2)	Orifice dH (1)	Orifice dH (2)	Orifice dH (amb)	Meter oF (1)	Meter oF (2)	Meter oF (amb)	Meter Vac. In. Hg. (1)	Meter Vac. In. Hg. (2)	Dilution Tunnel Temp.	Dilution Tunnel dP	Pro. Rate (%) (1)	Pro. Rate (%) (2)	Scale Reading	Weight Change	Load Side Liquid Flow Rate	Boiler Side Liquid Flow Rate (optional)	Thermopile ΔT	Boiler to Heat Exch. Temp.	Heat Exch to Boiler Temp.	Inlet Load Temp.	Outlet Load Temp.	Stack	Filter (1)	Filter (2)	Ambient		Specific Heat of Inlet Water (BTU/lb-°F)	Mass Flow Rate of Inlet Water (lb/min)	Heat Output, Btu
1789	290.834	294.462		0.17	0.17	1.33	1.08	0.26	98	97	84	2.01	0.00	86	0.015	97	97	92.8	-0.08	0.72	15.48	91.8	168.5	165.0	76.4	168.3	119	84	84	84		1.001	5.954	547
1790	290.998	294.627		0.16	0.17	1.33	1.09	0.26	98	97	84	1.99	0.00	86	0.013	104	103	92.9	-0.05	0.72	15.45	91.7	168.4	164.9	76.4	168.2	118	84	84	84		1.001	5.956	547
1791	291.163	294.793		0.17	0.17	1.32	1.08	0.26	98	97	84	2.01	0.00	86	0.014	101	100	92.8	0.12	0.68	15.46	91.6	168.2	164.7	76.5	168.0	119	84	84	84		1.001	5.629	516
1792	291.327	294.958		0.16	0.17	1.33	1.08	0.26	98	97	84	1.99	0.00	86	0.013	104	103	92.8	-0.03	0.76	15.48	91.3	168.1	164.5	76.5	167.8	119	84	84	84		1.001	6.303	576
1793	291.492	295.123		0.17	0.16	1.33	1.09	0.26	98	97	84	1.99	0.00	86	0.014	101	100	92.8	-0.03	0.71	15.59	91.2	167.9	164.3	76.5	167.7	118	84	84	84		1.001	5.877	537
1794	291.655	295.289		0.16	0.17	1.34	1.09	0.26	98	97	84	2.00	0.00	86	0.013	103	104	92.7	0.10	0.65	15.53	91.1	167.7	164.2	76.4	167.5	118	84	84	84		1.001	5.378	491
1795	291.820	295.454		0.17	0.17	1.34	1.09	0.26	98	97	84	2.01	0.00	86	0.013	105	103	92.8	-0.04	0.70	15.48	91.0	167.6	164.1	76.4	167.4	118	84	84	84		1.001	5.792	528
1796	291.984	295.620		0.16	0.17	1.33	1.08	0.26	98	97	84	2.00	0.00	86	0.013	104	104	92.8	-0.03	0.76	15.48	90.8	167.5	164.0	76.4	167.3	117	84	84	84		1.001	6.279	571
1797	292.149	295.785		0.17	0.17	1.33	1.08	0.26	98	97	84	2.00	0.00	86	0.014	101	100	92.8	0.04	0.74	15.51	90.7	167.4	163.8	76.4	167.1	117	84	84	84		1.001	6.119	555
1798	292.313	295.951		0.16	0.17	1.33	1.09	0.26	98	97	84	1.99	0.00	86	0.014	100	100	92.8	-0.09	0.66	15.50	90.6	167.2	163.7	76.4	167.0	117	84	84	84		1.001	5.467	496
1799	292.478	296.117		0.17	0.17	1.33	1.08	0.26	98	97	83	2.01	0.00	86	0.014	101	100	92.8	0.09	0.76	15.49	90.4	167.1	163.6	76.4	166.8	116	84	84	83		1.001	6.279	568
1800	292.642	296.282		0.16	0.16	1.33	1.08	0.26	98	97	84	2.00	0.00	92	0.014	101	100	92.8	-0.09	0.74	15.51	90.3	166.9	163.4	76.4	166.7	139	84	85	84		1.001	6.115	553
1801	292.806	296.447		0.16	0.17	1.33	1.08	0.26	98	97	84	2.00	0.00	88	0.011	113	112	92.6	0.23	0.84	15.58	90.1	166.7	163.2	76.4	166.5	135	84	84	84		1.001	6.942	626
1802	292.970	296.612		0.16	0.17	1.34	1.08	0.26	98	97	84	2.01	0.00	86	0.015	97	96	92.7	-0.13	0.62	15.45	90.0	166.5	163.0	76.3	166.3	130	84	84	84		1.001	5.174	466
1803	293.134	296.778		0.16	0.17	1.33	1.08	0.26	98	97	84	2.00	0.00	86	0.014	100	100	92.8	-0.05	0.75	15.56	89.9	166.4	162.9	76.3	166.2	127	84	84	84		1.001	6.248	562
1804	293.298	296.943		0.16	0.16	1.33	1.09	0.26	98	97	84	1.99	0.00	86	0.014	100	100	92.9	-0.06	0.68	15.50	89.7	166.3	162.9	76.4	166.1	124	84	84	84		1.001	5.631	506
1805	293.463	297.109		0.17	0.17	1.34	1.09	0.26	98	97	84	2.00	0.00	86	0.014	101	100	92.9	0.00	0.66	15.52	89.6	166.1	162.7	76.4	165.9	123	84	84	84		1.001	5.468	490
1806	293.627	297.274		0.16	0.17	1.33	1.09	0.26	98	97	84	1.99	0.00	86	0.013	104	103	92.8	0.04	0.81	15.54	89.4	166.0	162.5	76.4	165.8	122	84	84	84		1.001	6.763	605
1807	293.792	297.440		0.16	0.17	1.33	1.08	0.26	98	97	84	2.00	0.00	86	0.013	105	104	92.9	-0.03	0.66	15.44	89.3	165.9	162.4	76.4	165.6	122	84	84	84		1.001	5.469	489
1808	293.956	297.606		0.16	0.17	1.33	1.09	0.26	98	97	84	1.99	0.00	86	0.014	100	100	92.7	0.14	0.70	15.50	89.1	165.7	162.2	76.3	165.5	121	84	84	84		1.001	5.793	517
1809	294.121	297.772		0.16	0.17	1.33	1.08	0.26	98	97	84	1.99	0.00	86	0.014	101	100	92.8	-0.08	0.75	15.45	89.0	165.6	162.1	76.3	165.3	120	84	84	84		1.001	6.274	559
1810	294.285	297.937		0.16	0.17	1.33	1.08	0.26	98	97	84	1.99	0.00	86	0.014	100	100	92.8	0.04	0.73	15.53	88.9	165.4	161.9	76.4	165.2	119	84	84	84		1.001	6.083	541
1811	294.448	298.102		0.16	0.16	1.34	1.08	0.26	98	97	84	2.01	0.00	86	0.014	100	100	92.7	0.01	0.72	15.60	88.7	165.3	161.7	76.4	165.0	119	84	84	84		1.001	5.954	528
1812	294.612	298.267		0.16	0.17	1.33	1.08	0.26	98	97	84	1.99	0.00	86	0.014	100	100	92.7	0.06	0.77	15.45	88.5	165.1	161.6	76.3	164.9	119	84	84	84		1.001	6.425	569
1813	294.776	298.433		0.16	0.17	1.34	1.08	0.26	98	97	83	1.99	0.00	86	0.015	97	97	92.6	0.04	0.74	15.48	88.4	165.0	161.5	76.3	164.7	118	84	84	83		1.001	6.120	542
1814	294.941	298.598		0.16	0.17	1.33	1.09	0.26	98	97	84	2.00	0.00	86	0.016	94	93	92.7	-0.07	0.68	15.50	88.3	164.8	161.4	76.3	164.6	118	84	84	84		1.001	5.631	498
1815	295.105	298.763		0.16	0.16	1.33	1.09	0.26	98	97	84	2.01	0.00	86	0.013	104	103	92.8	-0.07	0.74	15.47	88.1	164.7	161.3	76.4	164.5	118	84	84	84		1.001	6.120	540
1816	295.270	298.929		0.16	0.17	1.33	1.09	0.26	98	97	83	2.00	0.00	86	0.013	105	104	92.8	0.02	0.76	15.48	88.1	164.6	161.2	76.3	164.4	117	84	84	83		1.001	6.279	554
1817	295.434	299.094		0.16	0.17	1.33	1.08	0.26	98	97	83	1.99	0.00	86	0.012	108	107	92.8	-0.01	0.68	15.47	87.9	164.4	161.0	76.3	164.2	117	84	84	83		1.001	5.632	496
1818	295.599	299.260		0.16	0.17	1.33	1.09	0.26	98	97	83	1.99	0.00	86	0.013	105	104	92.7	0.06	0.72	15.46	87.8	164.3	160.9	76.2	164.0	116	84	84	83		1.001	5.956	524
1819	295.763	299.426		0.16	0.17	1.34	1.08	0.26	98	97	83	2.01	0.00	86	0.014	100	100	92.9	-0.17	0.70	15.53	87.7	164.1	160.7	76.2	163.9	116	84	84	83		1.001	5.793	508
1820	295.926	299.591		0.16	0.17	1.34	1.08	0.26	98	97	83	1.99	0.00	86	0.013	103	103	92.7	0.12	0.75	15.54	87.5	164.0	160.6	76.2	163.7	116	84	84	83		1.001	6.201	543
1821	296.091	299.756		0.17	0.16	1.34	1.08	0.26	98	97	83	2.01	0.00	86	0.014	101	100	92.8	0.00	0.77	15.52	87.3	163.8	160.4	76.3	163.6	115	84	84	83		1.001	6.428	562
1822	296.255	299.921		0.16	0.17	1.33	1.09	0.26	98	97	83	2.00	0.00	86	0.013	104	103	92.7	0.01	0.72	15.47	87.1	163.7	160.3	76.3	163.5	115	84	84	83		1.001	6.017	525
1823	296.419	300.087		0.16	0.17	1.33	1.08	0.26	98	97	83	1.99	0.00	86	0.013	104	104	92.8	-0.08	0.72	15.45	87.1	163.5	160.2	76.2	163.3	115	84	84	83		1.001	5.955	519
1824	296.584	300.252		0.17	0.17	1.33	1.09	0.26	98	97	83	2.00	0.00	86	0.013	105	103	92.7	0.15	0.74	15.52	86.9	163.4	160.1	76.3	163.1	115	84	84	83		1.001	6.123	532
1825	296.748	300.417		0.16	0.16	1.33	1.09	0.26	98	97	83	2.00	0.00	86	0.014	100	100	92.7	0.01	0.74	15.52	86.8	163.2	160.0	76.3	163.0	115	84	84	83		1.001	6.120	532
1826	296.912	300.583		0.16	0.17	1.34	1.09	0.26	98	97	83	2.01	0.00	86	0.015	97	97	92.7	-0.03	0.68	15.48	86.6	163.1	159.8	76.2	162.9	115	84	84	83		1.001	5.634	489
1827	297.076	300.749		0.16	0.17	1.33	1.09	0.26	98	97	83	2.00	0.00	86	0.012	108	108	92.6	0.04	0.74	15.52	86.5	163.0	159.7	76.2	162.7	114	84	84	83		1.001	6.121	530
1828	297.240	300.915		0.16	0.17	1.33	1.08	0.26	98	97	83	2.00	0.00	85	0.014	100	100	92.8	-0.16	0.76	15.52	86.4	162.8	159.6	76.2	162.6	114	84	84	83		1.001	6.285	544
1829	297.404	301.080		0.16	0.16	1.34	1.09	0.26	98	96	83	1.99	0.00	85	0.014	100	100	92.7	0.07	0.66	15.52	86.3	162.7	159.4	76.2	162.5	114	84	84	83		1.001	5.476	473
1830	297.568	301.245		0.16	0.17	1.34	1.08	0.26	98	97	83	2.00	0.00	85	0.014	100	99	92.7	0.04	0.69	15.52	86.1	162.6	159.2	76.2	162.3	114	84	84	83		1.001	5.737	495
1831	297.732	301.410		0.16	0.17	1.34	1.08	0.26	98	97	83	2.01	0.00	91	0.015	97	97	92.7	0.01	0.72	15.45	86.0	162.4	159.1	76.2	162.2	136	84	84	83		1.001	5.957	513
1832	297.897	301.576		0.16	0.17	1.33	1.09	0.26	98	96	83	1.99	0.00	87	0.013	105	104	92.6	0.04	0.68	15.53	85.9	162.2	159.0	76.2	162.1	130	84	84	83		1.001	5.635	484
1833	298.061	301.741		0.16	0.16	1.33	1.08	0.26	98	97	83	2.01	0.00	92	0.013	105	104	92.5	0.15	0.72	15.48	85.8	162.1	158.8	76.1	161.9	144	84	84	83		1.001	5.959	512
1834	298.225	301.906		0.16	0.17	1.33	1.09	0.26	98	97	83	1.99	0.00	94	0.014	101	100	92.5	0.04	0.76	15.50	85.6	161.9	158.6	76.1	161.7	153	84	84	83		1.001	6.281	538
1835	298.389	302.071		0.16	0.17	1.34	1.09	0.26	98	96	83	2.01	0.00	95	0.014	101	100	92.2	0.26	0.74	15.47	85.6	161.8	158.6	76.0	161.6	159	84	84	83		1.001	6.121	525
1836	298.553	302.236		0.16	0.16	1.34	1.09	0.26	98	96	83	2.01	0.00	96	0.014	101	101	92.0	0.14	0.81	15.51	85.5	161.7	158.5	75.9	161.4	166	84	85	83		1.001	6.768	579
1837	298.717	302.402		0.16	0.17	1.34	1.09	0.26	98	96	83	2.01	0.00	97	0.014	101	101	91.5	0.55	0.66	15.54	85.4	161.7	158.4	76.0	161.4	174	84	85	83		1.001	5.469	468
1838	298.881	302.568		0.16	0.17	1.34	1.09	0.26	98	96	83	2.00	0.00	98	0.014	101	101	91.0	0.52	0.72	15.48	85.5	161.7	158.4	76.0	161.4	183	84	85	83		1.001	5.960	510
1839	299.045	302.733		0.16	0.17	1.35	1.09	0.26	98	96	83	2.00	0.00	100	0.014	101	101	90.7	0.31	0.76	15.50	85.5	161.7	158.4	76.0	161.4	190	84	85	83		1.001	6.285	538
1840	299.209	302.898		0.16	0.17	1.34	1.09	0.26	98	96	83	2.00	0.00	102	0.014	102	101	90.0	0.65	0.69	15.47	85.7	161.9	158.6	76.0	161.6	202	84	85	83		1.001	5.706	489
1841	299.373	303.062		0.16	0.16	1.34	1.09	0.26	98	96	83	2.02	0.00	106	0.014	102	101	89.4	0.59	0.79	15.59	86.0	162.3	158.9	75.9	161.9	214	85	85	83		1.001	6.606	569
1842	299.536	303.227		0.16	0.16	1.34	1.09	0.26	98	96	83	2.00	0.00	109	0.015	98	98	88.8	0.68	0.74	15.56	86.5	162.9	159.4	75.9	162.4	224	85	86	83		1.001	6.120	530
1843	299.700	303.392		0.16	0.17	1.34	1.09	0.26	98	96	83	2.02	0.00	111	0.015	99	98	88.1	0.63	0.68	15.38	87.4	163.8	160.3	75.9	163.3	232	85	86	83		1.001	5.633	493
1844	299.864	303.556		0.16	0.16	1.33	1.09	0.26	98	96	83	2.02	0.00	113	0.014	103	101	87.4	0.73	0.74	15.53	88.1	164.4	160.9	75.8	164.0	240	85	86	83		1.001	6.118	540
1845	300.028	303.721		0.16	0.17	1.34	1.09	0.26	98	96	83	2.01	0.00	115	0.016	96	96	87.1	0.35	0.79	15.44	89.0	165.4	161.8	75.9	164.9	245	85	87	83		1.001	6.605	588
1846	300.192	303.886		0.16	0.17	1.34	1.09	0.26	98	96	83	2.01	0.00	116	0.014	103	102	86.2	0.87	0.74	15.51	89.9	166.2	162.7	75.9	165.8	250	85	87	83		1.001	6.119	551
1847	300.355	304.051		0.16	0.16	1.35	1.08	0.26	97	96	83	2.03	0.00	117	0.014	103	102	85.4	0.79	0.74	15.47	90.7	167.1	163.5	75.9	166.6	254	85	87	83		1.001	6.118	556
1848	300.518	304.214		0.16	0.16	1.34	1.09	0.26	97	96	83	2.03	0.00	117	0.013	106	105	84.8	0.60	0.74	15.52	91.7	168.2	164.5	75.9	167.6	257	86	87	83		1.001	6.112	561
1849	300.681	304.379		0.16	0.17	1.34	1.08	0.26	97	96	83	2.03	0.00	118	0.015	99	99	84.3	0.48	0.70	15.52	92.8	169.2	165.4	75.8	168.7	259	86	88	83		1.001	5.825	541
1850	300.845	304.543		0.16	0.16	1.34	1.09	0.26	98	96	83	2.01	0.00	119	0.015	100	99	83.5	0.82	0.74	15.54	93.9	170.3	166.6	75.8	169.7	261	86	88	83		1.001	6.168	580

Elapsed Time	Particulate Sampling Data																	Fuel Weight, lb		Flow, gpm		Temperature Data, oF													
	Gas Meter Cubic Feet (1)	Gas Meter Cubic Feet (2)	Gas Meter Cubic Feet (amb)	Sample Rate, cfm (1)	Sample Rate, cfm (2)	Orifice dH (1)	Orifice dH (2)	Orifice dH (amb)	Meter oF (1)	Meter oF (2)	Meter oF (amb)	Meter Vac. In. Hg. (1)	Meter Vac. In. Hg. (2)	Dilution Tunnel Temp.	Dilution Tunnel dP	Pro. Rate (%) (1)	Pro. Rate (%) (2)	Scale Reading	Weight Change	Load Side Liquid Flow Rate	Boiler Side Liquid Flow Rate (optional)	Thermopile ΔT	Boiler to Heat Exch. Temp.	Heat Exch to Boiler Temp.	Inlet Load Temp.	Outlet Load Temp.	Stack	Filter (1)	Filter (2)	Ambient		Specific Heat of Inlet Water (BTU/lb-°F)	Mass Flow Rate of Inlet Water (lb/min)	Heat Output, Btu
1851	301.008	304.707		0.16	0.16	1.34	1.08	0.26	97	96	83	2.03	0.00	119	0.015	99	99	82.8	0.70	0.66	15.57	95.1	171.6	167.9	75.9	171.0	263	86	88	83		1.001	5.475	521
1852	301.172	304.872		0.16	0.17	1.34	1.08	0.26	97	96	83	2.02	0.00	119	0.015	100	99	82.3	0.51	0.72	15.58	96.1	172.6	168.7	75.9	172.0	264	86	88	83		1.001	5.956	573
1853	301.336	305.036		0.16	0.16	1.34	1.08	0.26	97	96	83	2.03	0.00	120	0.014	103	102	81.3	0.95	0.76	15.50	97.4	173.9	170.0	75.9	173.3	266	86	88	83		1.001	6.280	612
1854	301.499	305.200		0.16	0.16	1.33	1.08	0.26	97	96	83	2.02	0.00	120	0.014	103	102	80.8	0.51	0.72	15.47	98.3	174.8	170.9	75.9	174.2	268	86	89	83		1.001	5.960	587
1855	301.663	305.363		0.16	0.16	1.33	1.08	0.26	97	96	83	2.02	0.00	120	0.015	100	98	80.1	0.67	0.72	15.53	99.4	175.9	172.0	75.9	175.4	268	86	89	83		1.001	5.955	593
1856	301.826	305.527		0.16	0.16	1.33	1.08	0.26	97	96	83	2.01	0.00	120	0.015	99	99	79.4	0.72	0.77	15.52	100.5	177.1	173.0	76.0	176.4	269	87	89	83		1.001	6.440	648
1857	301.990	305.691		0.16	0.16	1.34	1.08	0.26	97	96	83	2.02	0.00	119	0.015	100	99	78.7	0.74	0.74	15.47	101.6	178.2	174.2	76.0	177.6	266	87	89	83		1.001	6.118	622
1858	302.153	305.856		0.16	0.17	1.34	1.08	0.26	97	96	83	2.04	0.00	118	0.015	99	99	78.3	0.44	0.68	15.52	102.6	179.2	175.1	76.0	178.6	265	87	89	83		1.001	5.651	581
1859	302.317	306.020		0.16	0.16	1.34	1.08	0.26	97	96	83	2.03	0.00	119	0.015	100	99	77.4	0.86	0.65	15.51	103.6	180.3	176.2	76.1	179.7	267	87	89	83		1.001	5.429	563
1860	302.480	306.183		0.16	0.16	1.34	1.08	0.26	97	96	83	2.02	0.00	119	0.016	96	95	76.8	0.58	0.70	15.51	104.6	181.4	177.2	76.1	180.7	268	87	89	83		1.001	5.790	607
1861	302.643	306.347		0.16	0.16	1.34	1.08	0.26	97	96	83	2.02	0.00	120	0.014	103	102	76.3	0.50	0.74	15.54	105.8	182.4	178.2	76.1	181.9	272	87	90	83		1.001	6.118	648
1862	302.807	306.511		0.16	0.16	1.34	1.08	0.26	97	96	83	2.01	0.00	104	0.014	102	101	75.7	0.63	0.72	15.40	106.7	183.3	179.1	76.1	182.8	253	87	89	83		1.001	5.958	636
1863	302.970	306.676		0.16	0.16	1.34	1.08	0.26	97	96	83	2.01	0.00	97	0.015	97	97	75.5	0.21	0.70	15.45	107.3	183.8	179.7	76.1	183.4	237	86	88	83		1.001	5.796	622
1864	303.134	306.840		0.16	0.16	1.33	1.08	0.26	97	96	83	2.01	0.00	94	0.014	101	100	75.1	0.36	0.74	15.50	107.6	184.1	179.9	76.1	183.7	229	86	88	83		1.001	6.118	659
1865	303.298	307.006		0.16	0.17	1.33	1.07	0.26	97	96	83	2.02	0.00	92	0.015	97	97	74.8	0.26	0.68	15.51	107.7	184.2	180.1	76.1	183.8	223	86	88	83		1.001	5.631	607
1866	303.462	307.170		0.16	0.16	1.32	1.07	0.26	97	96	83	2.01	0.00	93	0.015	98	96	74.6	0.24	0.72	15.43	107.9	184.3	180.1	76.1	184.0	214	86	88	83		1.001	5.950	643
1867	303.626	307.334		0.16	0.16	1.33	1.07	0.26	97	96	83	2.02	0.00	92	0.016	94	93	74.4	0.19	0.70	15.56	107.9	184.3	180.1	76.0	184.0	208	86	87	83		1.001	5.829	630
1868	303.789	307.498		0.16	0.16	1.33	1.07	0.26	97	96	83	2.02	0.00	92	0.015	97	96	74.2	0.21	0.68	15.53	108.0	184.5	180.2	76.1	184.1	204	86	87	83		1.001	5.684	615
1869	303.953	307.663		0.16	0.17	1.33	1.08	0.26	97	96	83	2.01	0.00	91	0.016	94	94	74.0	0.22	0.74	15.48	108.1	184.6	180.4	76.1	184.2	200	86	87	83		1.001	6.118	662
1870	304.117	307.827		0.16	0.16	1.33	1.08	0.26	97	96	83	2.01	0.00	90	0.013	105	103	73.8	0.21	0.66	15.36	108.2	184.7	180.4	76.1	184.3	198	86	87	83		1.001	5.486	594
1871	304.280	307.992		0.16	0.17	1.33	1.08	0.26	97	96	83	2.02	0.00	89	0.014	100	100	73.7	0.06	0.68	15.43	108.3	184.7	180.5	76.1	184.4	196	85	87	83		1.001	5.633	611
1872	304.444	308.157		0.16	0.16	1.33	1.08	0.26	97	96	83	2.02	0.00	88	0.015	97	96	73.6	0.11	0.72	15.50	108.4	184.8	180.6	76.1	184.5	194	85	87	83		1.001	5.957	646
1873	304.607	308.322		0.16	0.17	1.33	1.08	0.26	97	96	83	2.02	0.00	88	0.014	100	100	73.6	-0.02	0.74	15.38	108.6	184.9	180.7	76.0	184.6	192	85	86	83		1.001	6.117	665
1874	304.771	308.487		0.16	0.17	1.32	1.07	0.26	97	96	83	2.01	0.00	88	0.014	101	100	73.4	0.27	0.76	15.42	108.6	185.0	180.8	76.0	184.6	190	85	86	83		1.001	6.283	683
1875	304.935	308.651		0.16	0.16	1.33	1.07	0.26	97	96	83	2.01	0.00	88	0.014	101	99	73.4	-0.01	0.76	15.46	108.7	185.0	180.8	76.0	184.7	188	85	86	83		1.001	6.279	683
1876	305.099	308.816		0.16	0.16	1.33	1.08	0.26	97	96	83	2.01	0.00	88	0.014	101	100	73.3	0.05	0.68	15.51	108.6	184.9	180.8	76.0	184.6	185	85	86	83		1.001	5.635	613
1877	305.263	308.980		0.16	0.16	1.32	1.08	0.26	97	96	83	2.02	0.00	87	0.014	100	99	73.3	0.07	0.68	15.56	108.5	184.9	180.7	76.0	184.6	183	85	86	83		1.001	5.632	612
1878	305.427	309.145		0.16	0.16	1.33	1.07	0.26	97	96	83	2.00	0.00	87	0.015	97	96	73.2	0.06	0.74	15.40	108.5	184.9	180.7	76.0	184.6	181	85	86	83		1.001	6.119	665
1879	305.591	309.310		0.16	0.17	1.33	1.08	0.26	97	96	83	2.01	0.00	87	0.013	104	104	73.2	0.04	0.76	15.58	108.6	184.9	180.7	76.0	184.6	179	85	86	83		1.001	6.281	683
1880	305.755	309.475		0.16	0.17	1.33	1.08	0.26	97	96	83	2.02	0.00	87	0.015	97	96	73.1	0.04	0.76	15.48	108.7	184.9	180.7	75.9	184.6	177	85	85	83		1.001	6.286	684
1881	305.918	309.640		0.16	0.16	1.33	1.08	0.26	97	96	83	2.01	0.00	87	0.014	100	100	72.9	0.16	0.74	15.46	108.7	184.9	180.7	75.9	184.6	175	84	85	83		1.001	6.119	666
1882	306.081	309.804		0.16	0.16	1.34	1.07	0.26	97	96	83	2.02	0.00	87	0.014	100	99	73.0	-0.02	0.70	15.55	108.6	184.9	180.7	75.9	184.5	173	84	85	83		1.001	5.796	630
1883	306.245	309.969		0.16	0.17	1.33	1.08	0.26	97	96	83	2.02	0.00	87	0.014	100	100	72.9	0.02	0.68	15.47	108.5	184.8	180.6	75.9	184.4	172	84	85	83		1.001	5.635	612
1884	306.409	310.133		0.16	0.16	1.33	1.07	0.26	97	96	83	2.00	0.00	87	0.013	104	103	73.0	-0.01	0.72	15.53	108.6	184.8	180.6	75.8	184.5	170	84	85	83		1.001	5.958	648
1885	306.573	310.298		0.16	0.17	1.33	1.08	0.26	97	96	83	2.02	0.00	87	0.014	100	100	73.0	-0.02	0.70	15.40	108.6	184.8	180.5	75.8	184.4	168	84	85	83		1.001	5.803	631
1886	306.737	310.463		0.16	0.17	1.33	1.08	0.26	97	96	83	2.01	0.00	87	0.013	104	104	72.8	0.18	0.68	15.51	108.5	184.7	180.5	75.8	184.3	167	84	85	83		1.001	5.636	612
1887	306.901	310.628		0.16	0.16	1.32	1.08	0.26	97	96	83	2.01	0.00	87	0.014	100	100	72.9	-0.11	0.75	15.51	108.5	184.7	180.4	75.9	184.3	165	84	85	83		1.001	6.203	674
1888	307.065	310.793		0.16	0.17	1.33	1.08	0.26	97	96	83	2.02	0.00	87	0.014	100	100	72.9	0.04	0.70	15.48	108.4	184.6	180.4	75.9	184.2	164	84	85	83		1.001	5.798	629
1889	307.229	310.958		0.16	0.17	1.33	1.08	0.26	97	96	83	2.02	0.00	86	0.013	104	103	72.7	0.13	0.76	15.50	108.4	184.6	180.4	75.8	184.2	162	84	85	83		1.001	6.287	682
1890	307.393	311.122		0.16	0.16	1.33	1.07	0.26	97	96	83	2.00	0.00	86	0.016	94	93	72.9	-0.19	0.72	15.48	108.4	184.5	180.3	75.8	184.2	161	84	85	83		1.001	5.960	647
1891	307.556	311.287		0.16	0.16	1.33	1.08	0.26	97	96	83	2.01	0.00	86	0.013	104	103	72.7	0.19	0.70	15.51	108.3	184.4	180.2	75.8	184.1	160	84	84	83		1.001	5.797	628
1892	307.719	311.452		0.16	0.17	1.33	1.08	0.26	97	96	83	2.01	0.00	86	0.014	100	100	72.8	-0.07	0.72	15.43	108.2	184.4	180.2	75.9	184.0	158	84	84	83		1.001	5.959	645
1893	307.884	311.617		0.17	0.17	1.34	1.08	0.26	97	96	83	2.01	0.00	86	0.014	101	100	72.8	0.03	0.76	15.57	108.1	184.3	180.1	75.9	184.0	157	84	84	83		1.001	6.283	680
1894	308.047	311.781		0.16	0.16	1.34	1.08	0.26	97	96	83	2.01	0.00	86	0.014	100	99	72.8	-0.05	0.64	15.57	108.1	184.2	180.1	75.8	183.9	156	84	84	83		1.001	5.312	575
1895	308.212	311.947		0.16	0.17	1.33	1.07	0.26	97	96	83	2.01	0.00	86	0.015	98	97	72.8	0.06	0.68	15.59	108.0	184.1	180.0	75.8	183.8	155	84	84	83		1.001	5.641	610
1896	308.376	312.112		0.16	0.17	1.33	1.08	0.26	97	96	83	2.01	0.00	86	0.014	100	100	72.8	0.00	0.70	15.47	108.0	184.1	179.9	75.8	183.7	153	83	84	83		1.001	5.809	628
1897	308.540	312.276		0.16	0.16	1.33	1.08	0.26	97	96	83	2.01	0.00	86	0.015	97	96	72.7	0.02	0.74	15.47	107.9	184.0	179.9	75.8	183.7	152	83	84	83		1.001	6.136	663
1898	308.704	312.441		0.16	0.16	1.33	1.07	0.26	97	96	83	2.02	0.00	86	0.016	94	93	72.9	-0.12	0.68	15.55	107.7	183.9	179.7	75.8	183.5	151	83	84	83		1.001	5.635	608
1899	308.868	312.606		0.16	0.17	1.33	1.08	0.26	97	96	83	2.01	0.00	86	0.016	94	93	72.9	0.00	0.72	15.48	107.7	183.8	179.7	75.8	183.5	150.41065	83	84	83		1.001	5.960	643
1900	309.032	312.770		0.16	0.16	1.33	1.08	0.26	97	96	83	2.02	0.00	86	0.016	94	93	72.7	0.14	0.74	15.51	107.6	183.7	179.6	75.8	183.4	149.50995	83	84	83		1.001	6.121	659
1901	309.195	312.935		0.16	0.17	1.33	1.08	0.26	97	96	83	2.00	0.00	86	0.015	96	96	72.6	0.15	0.81	15.53	107.5	183.7	179.5	75.9	183.3	148.69002	83	84	83		1.001	6.772	729
1902	309.359	313.100		0.16	0.17	1.33	1.08	0.26	97	96	83	2.02	0.00	86	0.014	100	100	72.8	-0.22	0.74	15.53	107.4	183.6	179.4	75.9	183.3	147.62131	83	84	83		1.001	6.121	658
1903	309.523	313.266		0.16	0.17	1.34	1.08	0.26	97	96	83	2.02	0.00	86	0.015	97	97	72.7	0.08	0.70	15.46	107.3	183.4	179.3	75.8	183.1	146.849	83	84	83		1.001	5.800	623
1904	309.687	313.431		0.16	0.16	1.34	1.08	0.26	97	96	83	2.00	0.00	86	0.014	100	100	72.7	0.00	0.70	15.63	107.2	183.3	179.1	75.8	183.0	145.95081	83	84	83		1.001	5.804	623
1905	309.851	313.595		0.16	0.16	1.33	1.08	0.26	97	96	83	2.00	0.00	86	0.013	104	103	72.7	-0.01	0.72	15.44	107.2	183.2	179.0	75.7	182.9	145.22505	83	84	83		1.001	5.961	640
1906	310.015	313.760		0.16	0.16	1.33	1.08	0.26	97	96	83	2.01	0.00	86	0.015	97	96	72.7	-0.02	0.68	15.46	107.0	183.1	179.0	75.8	182.8	144.30064	83	84	83		1.001	5.638	604
1907	310.180	313.925		0.17	0.17	1.33	1.08	0.26	97	96	83	2.01	0.00	86	0.013	105	103	72.6	0.14	0.73	15.44	106.9	183.0	178.8	75.8	182.7	143.61688	83	84	83		1.001	6.094	652
1908	310.343	314.089		0.16	0.16	1.33	1.08	0.26	97	96	83	2.00	0.00	85	0.015	96	96	72.8	-0.18	0.72	15.47	106.8	182.9	178.8	75.8	182.6	142.81349	83	83	83		1.001	5.962	638
1909	310.507	314.254		0.16	0.17	1.34	1.08	0.26	97	96	83	2.01	0.00	86	0.012	108	108	72.7	0.11	0.70	15.51	106.7	182.8	178.6	75.8	182.5	142.19171	83	83	83		1.001	5.799	619
1910	310.671	314.419		0.16	0.16	1.34	1.08	0.26	97	96	82	2.01	0.00	86	0.015	97	96	72.7	-0.04	0.72	15.50	106.6	182.7	178.5	75.8	182.4	141.56494	83	83	82		1.001	5.958	636
1911	310.835	314.584		0.16	0.17	1.34	1.08	0.26	97	96	83	2.03	0.00	86	0.014	100	100	72.8	-0.04	0.74	15.53	106.4	182.5	178.4	75.8	182.2	141.03728	83	83	83		1.001	6.124	653
1912	310.999	314.750		0.16	0.17	1.34	1.08	0.26	97	96	83	2.01	0.00	85	0.016	94	94	72.7	0.00	0.76	15.45	106.4	182.4	178.2	75.8	182.1	140.4637	83	83	83		1.001	6.283	669

Elapsed Time	Particulate Sampling Data																	Fuel Weight, lb		Flow, gpm		Temperature Data, oF												
	Gas Meter Cubic Feet (1)	Gas Meter Cubic Feet (2)	Gas Meter Cubic Feet (amb)	Sample Rate, cfm (1)	Sample Rate, cfm (2)	Orifice dH (1)	Orifice dH (2)	Orifice dH (amb)	Meter oF (1)	Meter oF (2)	Meter oF (amb)	Meter Vac. In. Hg. (1)	Meter Vac. In. Hg. (2)	Dilution Tunnel Temp.	Dilution Tunnel dP	Pro. Rate (%) (1)	Pro. Rate (%) (2)	Scale Reading	Weight Change	Load Side Liquid Flow Rate	Boiler Side Liquid Flow Rate (optional)	Thermopile ΔT	Boiler to Heat Exch. Temp.	Heat Exch to Boiler Temp.	Inlet Load Temp.	Outlet Load Temp.	Stack	Filter (1)	Filter (2)	Ambient		Specific Heat of Inlet Water (BTU/lb-°F)	Mass Flow Rate of Inlet Water (lb/min)	Heat Output, Btu
1913	311.162	314.914		0.16	0.16	1.34	1.07	0.26	97	96	83	2.01	0.00	85	0.014	100	99	72.7	0.05	0.74	15.47	106.3	182.3	178.2	75.8	182.1	139.88821	83	83	83		1.001	6.121	651
1914	311.326	315.079		0.16	0.17	1.34	1.08	0.26	97	96	83	2.02	0.00	85	0.014	100	100	72.8	-0.12	0.74	15.42	106.1	182.2	178.0	75.7	181.9	139.28131	83	83	83		1.001	6.125	651
1915	311.490	315.243		0.16	0.16	1.33	1.08	0.26	97	96	83	2.02	0.00	85	0.016	94	93	72.7	0.08	0.77	15.42	106.0	182.1	177.9	75.7	181.7	138.6866	83	83	83		1.001	6.409	680
1916	311.654	315.408		0.16	0.17	1.33	1.08	0.26	97	96	83	2.01	0.00	85	0.014	100	100	72.8	-0.03	0.72	15.51	105.9	181.9	177.8	75.7	181.6	138.201	83	83	83		1.001	5.962	632
1917	311.819	315.573		0.17	0.16	1.33	1.08	0.26	97	96	83	2.02	0.00	85	0.015	97	96	72.7	0.09	0.67	15.43	105.8	181.9	177.7	75.7	181.5	137.49435	83	83	83		1.001	5.557	588
1918	311.982	315.738		0.16	0.17	1.34	1.08	0.26	97	96	83	2.01	0.00	85	0.014	100	100	72.7	-0.01	0.64	15.47	105.6	181.7	177.5	75.7	181.4	137.20282	83	83	83		1.001	5.314	562
1919	312.147	315.903		0.16	0.17	1.33	1.08	0.26	97	96	83	2.00	0.00	85	0.012	109	108	72.9	-0.17	0.72	15.60	105.5	181.6	177.4	75.7	181.3	136.4509	83	83	83		1.001	5.962	630
1920	312.310	316.069		0.16	0.17	1.34	1.08	0.26	97	95	83	2.02	0.00	85	0.014	100	100	72.8	0.03	0.72	15.48	105.4	181.5	177.4	75.8	181.2	136.14417	83	83	83		1.001	5.963	629
1921	312.474	316.233		0.16	0.16	1.34	1.08	0.26	97	95	83	2.02	0.00	85	0.015	97	96	72.7	0.17	0.72	15.49	105.3	181.3	177.2	75.7	181.0	135.64748	83	83	83		1.001	5.963	629
1922	312.638	316.398		0.16	0.17	1.34	1.08	0.26	97	95	83	2.01	0.00	85	0.013	104	104	72.7	-0.01	0.70	15.51	105.1	181.2	177.2	75.7	180.9	135.17989	83	83	83		1.001	5.803	611
1923	312.802	316.562		0.16	0.16	1.33	1.08	0.26	97	95	83	2.02	0.00	85	0.014	100	99	72.8	-0.10	0.68	15.47	105.0	181.1	177.0	75.8	180.8	134.81288	83	83	83		1.001	5.664	595
1924	312.966	316.727		0.16	0.16	1.33	1.08	0.26	97	95	82	2.00	0.00	85	0.013	104	104	72.6	0.15	0.73	15.47	104.9	180.9	176.8	75.8	180.6	134.12567	83	83	82		1.001	6.063	636
1925	313.130	316.892		0.16	0.17	1.33	1.08	0.26	97	95	82	2.01	0.00	85	0.015	97	96	72.7	-0.14	0.76	15.58	104.9	180.8	176.7	75.7	180.5	133.69728	83	83	82		1.001	6.289	660
1926	313.295	317.057		0.17	0.17	1.33	1.08	0.26	97	95	82	2.02	0.00	85	0.013	105	104	72.8	-0.01	0.74	15.50	104.7	180.6	176.5	75.6	180.3	133.44568	83	83	82		1.001	6.125	642
1927	313.459	317.222		0.16	0.16	1.33	1.08	0.26	97	95	82	2.02	0.00	85	0.013	104	104	72.8	-0.02	0.72	15.52	104.6	180.5	176.4	75.7	180.2	132.88944	83	83	82		1.001	5.965	624
1928	313.623	317.388		0.16	0.17	1.34	1.08	0.26	97	95	82	2.01	0.00	85	0.015	97	97	72.7	0.04	0.74	15.43	104.4	180.4	176.4	75.7	180.1	132.58601	83	83	82		1.001	6.124	640
1929	313.787	317.552		0.16	0.16	1.33	1.07	0.26	97	95	82	2.02	0.00	85	0.014	100	99	72.7	0.09	0.72	15.46	104.3	180.3	176.3	75.7	180.0	131.95744	82	83	82		1.001	5.961	623
1930	313.950	317.717		0.16	0.16	1.34	1.08	0.26	97	95	82	2.02	0.00	85	0.015	96	96	72.7	-0.07	0.74	15.52	104.1	180.1	176.1	75.6	179.8	131.96256	82	83	82		1.001	6.127	639
1931	314.114	317.881		0.16	0.16	1.33	1.07	0.26	97	95	82	2.03	0.00	94	0.015	98	97	72.4	0.28	0.76	15.54	104.1	180.0	176.0	75.6	179.7	155.81772	83	84	82		1.001	6.289	655
1932	314.278	318.045		0.16	0.16	1.34	1.09	0.26	97	95	82	2.01	0.00	88	0.014	101	99	72.4	0.08	0.72	15.47	103.9	179.8	175.9	75.6	179.6	153.16625	82	83	82		1.001	5.968	621
1933	314.442	318.211		0.16	0.17	1.33	1.09	0.26	96	95	82	2.00	0.00	86	0.014	101	100	72.4	-0.09	0.72	15.48	103.7	179.7	175.6	75.6	179.4	148.10495	82	83	82		1.001	5.947	617
1934	314.606	318.376		0.16	0.16	1.33	1.09	0.26	96	95	82	2.00	0.00	85	0.015	97	96	72.4	0.03	0.66	15.49	103.7	179.6	175.5	75.6	179.3	144.48058	82	83	82		1.001	5.480	569
1935	314.770	318.542		0.16	0.17	1.33	1.09	0.26	96	95	82	2.02	0.00	85	0.014	100	100	72.3	0.15	0.70	15.53	103.5	179.5	175.5	75.6	179.2	142.01598	82	83	82		1.001	5.794	601
1936	314.935	318.707		0.17	0.17	1.33	1.09	0.26	96	95	82	2.01	0.00	85	0.015	98	96	72.4	-0.11	0.72	15.43	103.4	179.3	175.2	75.6	179.1	140.08369	82	83	82		1.001	5.967	618
1937	315.099	318.872		0.16	0.17	1.34	1.08	0.26	96	95	82	2.00	0.00	85	0.015	97	96	72.3	0.14	0.74	15.49	103.2	179.2	175.1	75.6	178.9	138.31497	82	83	82		1.001	6.127	633
1938	315.263	319.037		0.16	0.16	1.33	1.08	0.26	96	95	82	2.00	0.00	85	0.015	97	96	72.3	-0.01	0.62	15.52	103.1	179.0	175.1	75.6	178.7	137.09033	82	83	82		1.001	5.153	532
1939	315.427	319.202		0.16	0.17	1.34	1.09	0.26	96	95	82	2.00	0.00	85	0.012	108	108	72.2	0.08	0.80	15.40	103.0	178.9	174.9	75.6	178.6	135.77184	82	83	82		1.001	6.612	682
1940	315.590	319.367		0.16	0.17	1.34	1.08	0.26	96	95	82	2.02	0.00	85	0.013	104	104	72.3	-0.11	0.66	15.42	102.9	178.8	174.8	75.6	178.4	134.75018	82	83	82		1.001	5.477	564
1941	315.754	319.532		0.16	0.16	1.34	1.09	0.26	96	95	82	2.00	0.00	85	0.014	100	100	72.4	-0.07	0.76	15.52	102.8	178.6	174.6	75.6	178.4	133.46971	82	83	82		1.001	6.288	647
1942	315.918	319.698		0.16	0.17	1.34	1.09	0.26	96	95	82	2.00	0.00	85	0.013	104	104	72.3	0.07	0.68	15.51	102.6	178.5	174.5	75.6	178.2	132.74548	82	83	82		1.001	5.662	582
1943	316.083	319.863		0.17	0.17	1.33	1.09	0.26	96	95	82	2.01	0.00	85	0.014	101	100	72.3	0.00	0.69	15.51	102.5	178.4	174.4	75.6	178.1	131.90808	82	83	82		1.001	5.715	586
1944	316.247	320.028		0.16	0.17	1.33	1.09	0.26	96	95	82	2.01	0.00	85	0.014	100	100	72.3	0.01	0.70	15.49	102.3	178.2	174.3	75.6	177.9	131.20068	82	83	82		1.001	5.796	594
1945	316.411	320.194		0.16	0.17	1.33	1.09	0.26	96	95	82	2.00	0.00	85	0.015	97	97	72.4	-0.08	0.77	15.51	102.2	178.1	174.1	75.6	177.8	130.65659	82	83	82		1.001	6.425	657
1946	316.575	320.359		0.16	0.16	1.34	1.08	0.26	96	95	82	2.01	0.00	85	0.013	104	104	72.5	-0.11	0.76	15.51	102.0	177.9	174.0	75.6	177.6	129.72623	82	83	82		1.001	6.290	643
1947	316.740	320.524		0.17	0.17	1.34	1.08	0.26	96	95	82	2.01	0.00	84	0.013	105	103	72.4	0.09	0.82	15.55	101.9	177.8	173.7	75.6	177.5	129.02033	82	82	82		1.001	6.779	692
1948	316.903	320.689		0.16	0.17	1.34	1.08	0.26	96	95	82	2.01	0.00	84	0.015	96	96	72.2	0.16	0.74	15.46	101.7	177.7	173.7	75.6	177.3	128.49597	82	82	82		1.001	6.127	624
1949	317.067	320.854		0.16	0.16	1.34	1.08	0.26	96	95	82	2.02	0.00	84	0.014	100	100	72.4	-0.21	0.72	15.45	101.6	177.5	173.5	75.6	177.2	128.32311	82	82	82		1.001	5.968	607
1950	317.231	321.019		0.16	0.17	1.34	1.09	0.26	96	95	82	2.00	0.00	84	0.014	100	100	72.3	0.11	0.68	15.46	101.4	177.3	173.3	75.7	177.1	127.61366	82	82	82		1.001	5.642	573
1951	317.394	321.184		0.16	0.17	1.34	1.09	0.26	96	95	82	2.00	0.00	84	0.013	104	103	72.4	-0.08	0.76	15.54	101.2	177.2	173.2	75.6	176.9	127.2175	82	82	82		1.001	6.286	637
1952	317.559	321.349		0.17	0.16	1.34	1.08	0.26	96	95	82	2.02	0.00	84	0.014	101	100	72.4	-0.05	0.66	15.51	101.2	177.1	173.1	75.6	176.8	126.64812	82	82	82		1.001	5.510	558
1953	317.723	321.515		0.16	0.17	1.33	1.08	0.26	96	95	82	2.00	0.00	84	0.012	108	108	72.4	0.03	0.64	15.42	101.0	176.9	172.9	75.6	176.6	125.97702	82	82	82		1.001	5.319	538
1954	317.887	321.681		0.16	0.17	1.33	1.08	0.26	96	95	82	2.01	0.00	84	0.014	100	100	72.4	-0.01	0.76	15.48	100.9	176.7	172.7	75.5	176.5	125.80256	82	82	82		1.001	6.286	635
1955	318.052	321.845		0.17	0.16	1.33	1.08	0.26	96	95	82	2.00	0.00	84	0.013	105	103	72.4	0.03	0.74	15.47	100.8	176.6	172.6	75.5	176.3	125.63842	82	82	82		1.001	6.128	618
1956	318.216	322.011		0.16	0.17	1.34	1.08	0.26	96	95	82	2.00	0.00	84	0.015	97	97	72.4	0.03	0.72	15.44	100.6	176.4	172.5	75.6	176.2	125.24127	82	82	82		1.001	5.968	601
1957	318.380	322.175		0.16	0.16	1.34	1.08	0.26	96	95	82	2.01	0.00	84	0.014	100	99	72.5	-0.10	0.72	15.49	100.4	176.3	172.4	75.6	176.0	124.85357	82	82	82		1.001	5.967	600
1958	318.543	322.341		0.16	0.17	1.34	1.08	0.26	96	95	82	2.00	0.00	84	0.014	100	100	72.4	0.09	0.66	15.59	100.4	176.2	172.3	75.5	175.9	124.24691	82	82	82		1.001	5.483	551
1959	318.707	322.505		0.16	0.16	1.34	1.09	0.26	96	95	82	2.00	0.00	84	0.016	94	93	72.4	0.02	0.74	15.50	100.2	176.0	172.1	75.5	175.7	124.21399	82	82	82		1.001	6.128	615
1960	318.871	322.671		0.16	0.17	1.34	1.09	0.26	96	95	82	2.02	0.00	84	0.015	97	97	72.3	0.09	0.70	15.47	100.0	175.8	171.9	75.6	175.5	123.40869	82	82	82		1.001	5.811	582
1961	319.035	322.836		0.16	0.17	1.34	1.09	0.26	96	95	82	2.01	0.00	84	0.013	104	103	72.5	-0.19	0.70	15.44	99.9	175.7	171.8	75.5	175.4	123.17871	82	82	82		1.001	5.806	581
1962	319.199	323.002		0.16	0.17	1.33	1.07	0.26	96	95	82	2.01	0.00	92	0.013	105	105	72.3	0.15	0.71	15.42	99.7	175.5	171.6	75.6	175.3	146.76045	82	83	82		1.001	5.900	589
1963	319.363	323.167		0.16	0.16	1.33	1.09	0.26	96	95	82	2.02	0.00	86	0.015	97	96	72.3	-0.04	0.65	15.38	99.6	175.4	171.4	75.5	175.1	142.6713	82	82	82		1.001	5.365	535
1964	319.527	323.332		0.16	0.17	1.33	1.08	0.26	96	95	82	2.00	0.00	85	0.015	97	96	72.3	0.09	0.72	15.44	99.4	175.2	171.3	75.5	175.0	137.92113	82	82	82		1.001	5.967	594
1965	319.691	323.497		0.16	0.17	1.34	1.08	0.26	96	95	82	2.02	0.00	84	0.015	97	96	72.2	0.01	0.76	15.46	99.4	175.1	171.3	75.5	174.8	134.45306	82	82	82		1.001	6.292	626
1966	319.856	323.661		0.17	0.16	1.34	1.09	0.26	96	95	82	2.00	0.00	84	0.013	105	103	72.3	-0.06	0.66	15.43	99.2	175.0	171.2	75.5	174.8	131.85205	82	82	82		1.001	5.481	545
1967	320.019	323.827		0.16	0.17	1.34	1.08	0.26	96	95	82	2.00	0.00	84	0.014	100	100	72.3	0.00	0.74	15.54	99.0	174.9	171.0	75.6	174.6	130.42047	82	82	82		1.001	6.128	607
1968	320.182	323.992		0.16	0.17	1.34	1.09	0.26	96	95	82	2.02	0.00	84	0.012	108	108	72.3	0.01	0.76	15.46	98.9	174.7	170.9	75.5	174.4	129.26715	82	82	82		1.001	6.291	623
1969	320.347	324.157		0.16	0.16	1.34	1.09	0.26	96	95	82	2.01	0.00	84	0.015	98	96	72.3	-0.02	0.76	15.59	98.8	174.6	170.7	75.5	174.3	127.70957	82	82	82		1.001	6.277	621
1970	320.510	324.322		0.16	0.17	1.34	1.09	0.26	96	95	82	2.01	0.00	84	0.015	96	96	72.2	0.08	0.77	15.50	98.7	174.4	170.6	75.5	174.2	126.69305	82	82	82		1.001	6.439	636
1971	320.675	324.488		0.17	0.17	1.34	1.08	0.26	96	95	82	2.01	0.00	84	0.013	105	104	72.2	0.07	0.69	15.52	98.5	174.3	170.5	75.5	174.0	125.9478	82	82	82		1.001	5.763	568
1972	320.839	324.654		0.16	0.17	1.34	1.09	0.26	96	95	82	2.01	0.00	84	0.013	104	104	72.2	-0.06	0.67	15.45	98.3	174.1	170.3	75.5	173.8	125.29587	82	82	82		1.001	5.542	545
1973	321.003	324.819		0.16	0.17	1.33	1.08	0.26	96	95	82	2.00	0.00	84	0.016	94	93	72.3	-0.08	0.70	15.58	98.1	174.0	170.1	75.5	173.7	124.36626	82	82	82		1.001	5.807	571
1974	321.168	324.983		0.17	0.16	1.33	1.08	0.26	96	95	82	2.01	0.00	84	0.015	98	96	72.3	0.04	0.72	15.41	98.0	173.8	170.1	75.5	173.6	123.62897	82	82	82		1.001	5.966	586

Elapsed Time	Particulate Sampling Data																	Fuel Weight, lb		Flow, gpm		Temperature Data, oF													
	Gas Meter Cubic Feet (1)	Gas Meter Cubic Feet (2)	Gas Meter Cubic Feet (amb)	Sample Rate, cfm (1)	Sample Rate, cfm (2)	Orifice dH (1)	Orifice dH (2)	Orifice dH (amb)	Meter oF (1)	Meter oF (2)	Meter oF (amb)	Meter Vac. In. Hg. (1)	Meter Vac. In. Hg. (2)	Dilution Tunnel Temp.	Dilution Tunnel dP	Pro. Rate (%) (1)	Pro. Rate (%) (2)	Scale Reading	Weight Change	Load Side Liquid Flow Rate	Boiler Side Liquid Flow Rate (optional)	Thermopile ΔT	Boiler to Heat Exch. Temp.	Heat Exch to Boiler Temp.	Inlet Load Temp.	Outlet Load Temp.	Stack	Filter (1)	Filter (2)	Ambient		Specific Heat of Inlet Water (BTU/lb-°F)	Mass Flow Rate of Inlet Water (lb/min)	Heat Output, Btu
1975	321.332	325.148		0.16	0.17	1.34	1.09	0.26	96	95	82	2.01	0.00	84	0.014	100	100	72.2	0.08	0.70	15.59	97.9	173.7	170.0	75.5	173.4	123.6956	82	82	82		1.001	5.806	569
1976	321.495	325.314		0.16	0.17	1.34	1.08	0.26	96	95	81	2.00	0.00	84	0.014	100	100	72.2	-0.06	0.74	15.44	97.8	173.5	169.7	75.5	173.2	123.22188	82	82	81		1.001	6.130	600
1977	321.659	325.478		0.16	0.16	1.34	1.09	0.26	96	95	81	2.00	0.00	84	0.015	97	96	72.2	0.01	0.70	15.51	97.7	173.4	169.7	75.5	173.1	122.82093	82	82	81		1.001	5.807	568
1978	321.822	325.644		0.16	0.17	1.34	1.09	0.26	96	95	81	2.01	0.00	84	0.014	100	100	72.3	-0.05	0.74	15.50	97.5	173.2	169.5	75.5	173.0	122.76708	82	82	81		1.001	6.139	599
1979	321.987	325.809		0.17	0.17	1.34	1.09	0.26	96	95	81	2.00	0.00	84	0.015	98	96	72.2	0.06	0.72	15.53	97.4	173.1	169.4	75.5	172.9	122.26569	82	82	81		1.001	5.977	583
1980	322.151	325.975		0.16	0.17	1.34	1.08	0.26	96	95	81	2.01	0.00	84	0.013	104	104	72.1	0.14	0.72	15.51	97.2	172.9	169.2	75.5	172.7	122.13029	82	82	81		1.001	5.970	581
1981	322.315	326.140		0.16	0.16	1.34	1.09	0.26	96	95	81	2.01	0.00	84	0.013	104	103	72.3	-0.20	0.76	15.48	97.0	172.8	169.1	75.5	172.5	121.68359	82	82	81		1.001	6.294	611
1982	322.479	326.305		0.16	0.17	1.33	1.09	0.26	96	94	81	2.02	0.00	84	0.015	97	96	72.3	-0.04	0.70	15.53	96.8	172.6	168.8	75.5	172.3	121.36589	82	82	81		1.001	5.804	562
1983	322.643	326.470		0.16	0.17	1.33	1.08	0.26	96	94	81	2.01	0.00	83	0.014	100	100	72.2	0.09	0.72	15.51	96.7	172.5	168.7	75.5	172.2	120.69859	82	82	81		1.001	5.967	578
1984	322.807	326.635		0.16	0.16	1.34	1.08	0.26	96	95	81	2.01	0.00	84	0.014	100	100	72.3	-0.05	0.64	15.58	96.6	172.4	168.7	75.5	172.1	120.92072	82	82	81		1.001	5.322	515
1985	322.971	326.800		0.16	0.17	1.34	1.08	0.26	96	95	81	2.00	0.00	84	0.015	97	96	72.4	-0.10	0.74	15.52	96.5	172.2	168.5	75.5	172.0	120.09499	82	82	81		1.001	6.132	592
1986	323.135	326.965		0.16	0.16	1.33	1.09	0.26	96	94	81	1.99	0.00	84	0.013	104	104	72.3	0.07	0.72	15.50	96.2	172.0	168.3	75.5	171.7	119.99139	82	82	81		1.001	5.970	575
1987	323.298	327.131		0.16	0.17	1.34	1.09	0.26	96	94	81	2.00	0.00	84	0.013	104	104	72.3	-0.02	0.72	15.55	96.2	171.9	168.2	75.4	171.7	119.94743	81	82	81		1.001	5.974	575
1988	323.462	327.296		0.16	0.17	1.34	1.09	0.26	96	94	81	2.00	0.00	84	0.015	97	96	72.2	0.07	0.70	15.59	96.0	171.7	168.0	75.4	171.5	119.51504	82	82	81		1.001	5.852	563
1989	323.626	327.462		0.16	0.17	1.34	1.08	0.26	96	94	81	2.00	0.00	84	0.014	100	100	72.3	-0.03	0.74	15.47	95.9	171.6	167.8	75.4	171.3	119.12757	82	82	81		1.001	6.188	594
1990	323.791	327.627		0.17	0.17	1.34	1.09	0.26	96	94	81	2.01	0.00	84	0.014	101	100	72.1	0.13	0.68	15.53	95.8	171.4	167.7	75.4	171.2	119.18617	81	82	81		1.001	5.646	541
1991	323.955	327.792		0.16	0.16	1.33	1.08	0.26	95	94	81	2.00	0.00	83	0.014	100	100	72.2	-0.11	0.84	15.60	95.6	171.3	167.5	75.4	171.0	118.96795	81	82	81		1.001	6.945	665
1992	324.119	327.957		0.16	0.17	1.33	1.08	0.26	95	94	81	2.01	0.00	83	0.016	94	93	72.3	-0.08	0.80	15.52	95.4	171.1	167.4	75.5	170.8	118.15867	81	82	81		1.001	6.618	632
1993	324.283	328.121		0.16	0.16	1.33	1.08	0.26	95	94	81	2.00	0.00	90	0.014	101	100	72.1	0.25	0.68	15.44	95.3	171.0	167.3	75.4	170.7	141.9138	82	82	81		1.001	5.646	539
1994	324.447	328.286		0.16	0.17	1.34	1.08	0.26	96	94	81	2.02	0.00	85	0.015	97	97	72.3	-0.22	0.68	15.49	95.2	170.8	167.1	75.4	170.6	135.97385	81	82	81		1.001	5.645	538
1995	324.611	328.452		0.16	0.17	1.34	1.08	0.26	95	94	81	2.01	0.00	84	0.015	97	97	72.3	0.00	0.72	15.52	94.9	170.7	166.9	75.4	170.4	131.52206	81	82	81		1.001	5.968	567
1996	324.774	328.617		0.16	0.17	1.34	1.09	0.26	96	94	81	2.00	0.00	84	0.016	93	93	72.4	-0.10	0.66	15.49	94.8	170.5	166.8	75.5	170.3	128.74402	81	82	81		1.001	5.483	520
1997	324.938	328.782		0.16	0.16	1.34	1.09	0.26	95	94	81	2.01	0.00	83	0.015	97	96	72.3	0.14	0.74	15.53	94.7	170.5	166.7	75.5	170.2	126.23189	81	82	81		1.001	6.133	582
1998	325.102	328.948		0.16	0.17	1.34	1.08	0.26	95	94	81	2.01	0.00	83	0.015	97	97	72.2	0.03	0.72	15.47	94.5	170.2	166.5	75.5	170.0	124.09238	81	82	81		1.001	5.981	566
1999	325.266	329.113		0.16	0.17	1.34	1.09	0.26	95	94	81	2.00	0.00	83	0.015	97	96	72.2	0.05	0.74	15.44	94.5	170.1	166.5	75.4	169.9	123.50073	81	82	81		1.001	6.177	584
2000	325.430	329.278		0.16	0.17	1.34	1.08	0.26	95	94	81	2.02	0.00	83	0.014	100	100	72.1	0.05	0.73	15.55	94.3	169.9	166.3	75.4	169.7	122.12963	81	82	81		1.001	6.057	572
2001	325.594	329.443		0.16	0.16	1.34	1.08	0.26	95	94	81	2.00	0.00	83	0.016	94	93	72.2	-0.10	0.76	15.47	94.1	169.8	166.1	75.4	169.5	121.36594	81	82	81		1.001	6.294	593
2002	325.758	329.608		0.16	0.17	1.33	1.09	0.26	95	94	81	2.00	0.00	83	0.014	100	100	72.2	0.04	0.74	15.43	94.0	169.6	166.0	75.4	169.4	120.71876	81	82	81		1.001	6.131	577
2003	325.922	329.773		0.16	0.17	1.34	1.08	0.26	95	94	81	2.00	0.00	83	0.015	97	96	72.2	-0.02	0.68	15.42	93.8	169.5	165.9	75.4	169.2	120.48935	81	82	81		1.001	5.647	530
2004	326.087	329.938		0.16	0.16	1.34	1.08	0.26	95	94	81	2.00	0.00	83	0.014	101	100	72.2	0.02	0.80	15.53	93.7	169.3	165.7	75.4	169.1	119.84389	81	82	81		1.001	6.620	621
2005	326.250	330.103		0.16	0.17	1.34	1.08	0.26	95	94	81	2.01	0.00	83	0.016	93	93	72.2	0.01	0.66	15.44	93.5	169.2	165.6	75.4	168.9	119.67394	81	82	81		1.001	5.484	513
2006	326.413	330.269		0.16	0.17	1.34	1.09	0.26	95	94	81	2.02	0.00	83	0.014	100	100	72.3	-0.17	0.72	15.56	93.5	169.1	165.5	75.4	168.8	119.27779	81	82	81		1.001	5.970	559
2007	326.577	330.434		0.16	0.17	1.34	1.08	0.26	95	94	81	2.00	0.00	83	0.014	100	100	72.3	0.02	0.74	15.49	93.3	168.9	165.3	75.4	168.6	119.66511	81	81	81		1.001	6.131	573
2008	326.741	330.599		0.16	0.16	1.34	1.09	0.26	95	94	81	2.01	0.00	83	0.013	104	104	72.2	0.14	0.68	15.53	93.2	168.7	165.2	75.4	168.5	118.86012	81	81	81		1.001	5.647	527
2009	326.905	330.764		0.16	0.17	1.34	1.08	0.26	95	94	81	2.01	0.00	83	0.013	104	104	72.3	-0.08	0.66	15.42	93.0	168.6	165.0	75.3	168.3	118.37809	81	81	81		1.001	5.483	510
2010	327.069	330.929		0.16	0.16	1.33	1.08	0.26	95	94	81	2.01	0.00	83	0.015	97	96	72.1	0.17	0.73	15.53	92.9	168.4	164.9	75.3	168.2	118.12028	81	81	81		1.001	6.068	564
2011	327.233	331.094		0.16	0.17	1.34	1.09	0.26	95	94	81	2.01	0.00	83	0.015	97	96	72.3	-0.19	0.68	15.53	92.7	168.3	164.7	75.3	168.0	118.00085	81	81	81		1.001	5.644	524
2012	327.398	331.259		0.17	0.17	1.33	1.09	0.26	95	94	81	2.01	0.00	83	0.015	98	96	72.2	0.10	0.68	15.52	92.6	168.2	164.6	75.3	167.9	117.37461	81	81	81		1.001	5.646	523
2013	327.561	331.424		0.16	0.16	1.33	1.09	0.26	95	94	81	2.00	0.00	83	0.013	104	104	72.2	-0.04	0.74	15.48	92.3	167.9	164.4	75.4	167.7	116.66647	81	81	81		1.001	6.135	567
2014	327.726	331.589		0.17	0.17	1.34	1.09	0.26	95	94	81	2.02	0.00	83	0.015	98	96	72.2	-0.02	0.68	15.52	92.2	167.8	164.2	75.4	167.6	116.64922	81	81	81		1.001	5.646	521
2015	327.889	331.755		0.16	0.17	1.34	1.09	0.26	95	94	81	2.00	0.00	83	0.015	96	97	72.3	-0.09	0.62	15.39	92.1	167.7	164.1	75.4	167.4	116.69378	81	81	81		1.001	5.161	476
2016	328.053	331.921		0.16	0.17	1.34	1.08	0.26	95	94	81	2.01	0.00	83	0.015	97	97	72.3	0.06	0.72	15.45	91.9	167.6	163.9	75.4	167.2	116.80359	81	81	81		1.001	5.974	549
2017	328.217	332.085		0.16	0.16	1.34	1.09	0.26	95	94	81	2.01	0.00	83	0.013	104	103	72.2	0.07	0.70	15.47	91.7	167.4	163.7	75.4	167.1	116.00597	81	81	81		1.001	5.805	533
2018	328.380	332.251		0.16	0.17	1.34	1.08	0.26	95	94	81	2.01	0.00	83	0.014	100	100	72.2	-0.06	0.74	15.52	91.6	167.2	163.6	75.4	167.0	115.71339	81	81	81		1.001	6.115	561
2019	328.545	332.415		0.17	0.16	1.34	1.08	0.26	95	94	81	2.01	0.00	83	0.014	101	99	72.3	-0.04	0.70	15.51	91.5	167.1	163.5	75.3	166.8	115.92319	81	81	81		1.001	5.824	534
2020	328.709	332.580		0.16	0.16	1.34	1.09	0.26	95	94	81	2.00	0.00	83	0.013	104	104	72.1	0.17	0.72	15.51	91.3	166.9	163.3	75.3	166.7	115.28819	81	81	81		1.001	5.972	546
2021	328.873	332.745		0.16	0.17	1.33	1.09	0.26	95	94	81	2.01	0.00	83	0.016	94	93	72.3	-0.17	0.68	15.56	91.2	166.8	163.2	75.3	166.6	114.90334	81	81	81		1.001	5.649	516
2022	329.037	332.911		0.16	0.17	1.34	1.09	0.26	95	94	81	2.00	0.00	83	0.015	97	97	72.3	-0.05	0.84	15.51	91.0	166.6	163.0	75.4	166.4	114.95718	81	81	81		1.001	6.949	633
2023	329.201	333.076		0.16	0.17	1.34	1.09	0.26	95	94	81	2.01	0.00	83	0.014	100	100	72.3	0.08	0.72	15.50	91.0	166.5	163.0	75.3	166.3	114.67216	81	81	81		1.001	5.971	544
2024	329.365	333.241		0.16	0.16	1.34	1.08	0.26	95	94	81	2.02	0.00	89	0.014	101	100	72.4	-0.11	0.70	15.45	90.8	166.3	162.8	75.3	166.1	137.73926	81	82	81		1.001	5.812	528
2025	329.528	333.407		0.16	0.17	1.34	1.08	0.26	95	94	81	2.00	0.00	85	0.015	97	97	72.3	0.09	0.68	15.50	90.6	166.2	162.7	75.3	166.0	131.34908	81	81	81		1.001	5.651	513
2026	329.691	333.571		0.16	0.16	1.34	1.08	0.26	95	94	81	2.02	0.00	83	0.014	100	99	72.3	0.01	0.70	15.53	90.5	166.1	162.5	75.3	165.8	126.31297	81	81	81		1.001	5.816	527
2027	329.856	333.736		0.17	0.16	1.34	1.08	0.26	95	94	81	2.01	0.00	83	0.014	101	100	72.1	0.19	0.68	15.49	90.4	166.0	162.4	75.3	165.7	123.30454	81	81	81		1.001	5.619	509
2028	330.019	333.901		0.16	0.17	1.34	1.08	0.26	95	94	81	2.02	0.00	83	0.015	96	96	72.3	-0.18	0.74	15.40	90.3	165.8	162.3	75.3	165.6	121.94401	81	81	81		1.001	6.153	556
2029	330.184	334.066		0.17	0.16	1.34	1.09	0.26	95	94	81	2.00	0.00	83	0.013	105	104	72.2	0.04	0.73	15.55	90.1	165.6	162.1	75.3	165.4	121.05848	81	81	81		1.001	6.107	551
2030	330.347	334.231		0.16	0.17	1.34	1.09	0.26	95	94	81	2.01	0.00	83	0.015	96	96	72.2	0.04	0.68	15.40	90.0	165.5	161.9	75.3	165.2	119.938	81	81	81		1.001	5.648	509
2031	330.512	334.397		0.17	0.17	1.33	1.09	0.26	95	94	81	2.02	0.00	83	0.014	101	100	72.3	-0.12	0.70	15.59	89.8	165.3	161.7	75.3	165.1	118.96765	81	81	81		1.001	5.809	522
2032	330.676	334.562		0.16	0.17	1.33	1.09	0.26	95	94	81	2.00	0.00	83	0.014	100	100	72.1	0.17	0.80	15.46	89.6	165.1	161.6	75.3	165.0	118.21664	81	81	81		1.001	6.622	594
2033	330.840	334.728		0.16	0.17	1.34	1.09	0.26	95	94	81	2.01	0.00	83	0.014	100	100	72.2	-0.04	0.74	15.40	89.5	165.0	161.5	75.3	164.8	117.73914	81	81	81		1.001	6.131	549
2034	331.004	334.893		0.16	0.16	1.34	1.08	0.26	95	94	81	2.01	0.00	83	0.015	97	96	72.3	-0.14	0.74	15.53	89.4	164.9	161.3	75.3	164.7	117.29162	81	81	81		1.001	6.136	549
2035	331.167	335.058		0.16	0.17	1.34	1.08	0.26	95	94	81	2.01	0.00	83	0.014	100	100	72.1	0.20	0.69	15.59	89.2	164.7	161.2	75.3	164.5	116.89214	81	81	81		1.001	5.746	513
2036	331.331	335.223		0.16	0.17	1.35	1.08	0.26	95	94	81	2.01	0.00	83	0.013	104	104	72.1	-0.05	0.73	15.57	89.0	164.6	161.1	75.3	164.3	116.31291	81	81	81		1.001	6.034	538

Elapsed Time	Particulate Sampling Data																	Fuel Weight, lb		Flow, gpm		Temperature Data, oF												
	Gas Meter Cubic Feet (1)	Gas Meter Cubic Feet (2)	Gas Meter Cubic Feet (amb)	Sample Rate, cfm (1)	Sample Rate, cfm (2)	Orifice dH (1)	Orifice dH (2)	Orifice dH (amb)	Meter oF (1)	Meter oF (2)	Meter oF (amb)	Meter Vac. In. Hg. (1)	Meter Vac. In. Hg. (2)	Dilution Tunnel Temp.	Dilution Tunnel dP	Pro. Rate (%) (1)	Pro. Rate (%) (2)	Scale Reading	Weight Change	Load Side Liquid Flow Rate	Boiler Side Liquid Flow Rate (optional)	Thermopile ΔT	Boiler to Heat Exch. Temp.	Heat Exch to Boiler Temp.	Inlet Load Temp.	Outlet Load Temp.	Stack	Filter (1)	Filter (2)	Ambient		Specific Heat of Inlet Water (BTU/lb-°F)	Mass Flow Rate of Inlet Water (lb/min)	Heat Output, Btu
2037	331.495	335.388		0.16	0.16	1.34	1.08	0.26	95	94	81	2.00	0.00	83	0.014	100	100	72.2	-0.09	0.72	15.39	88.8	164.4	160.9	75.3	164.2	116.41552	81	81	81		1.001	5.974	531
2038	331.659	335.553		0.16	0.17	1.34	1.09	0.26	95	94	81	2.00	0.00	83	0.014	100	100	72.2	0.07	0.62	15.52	88.8	164.3	160.8	75.3	164.0	116.60559	81	81	81		1.001	5.163	459
2039	331.823	335.718		0.16	0.17	1.34	1.09	0.26	95	94	81	2.00	0.00	83	0.015	97	96	72.2	-0.07	0.74	15.49	88.7	164.2	160.7	75.2	163.9	116.16637	81	81	81		1.001	6.135	545
2040	331.986	335.883		0.16	0.16	1.33	1.09	0.26	95	94	81	2.02	0.00	83	0.016	93	93	72.2	0.02	0.74	15.38	88.6	164.0	160.6	75.3	163.8	115.59965	81	81	81		1.001	6.134	544
2041	332.151	336.048		0.17	0.17	1.33	1.09	0.26	95	94	81	2.00	0.00	83	0.015	98	96	72.4	-0.14	0.70	15.45	88.4	163.9	160.4	75.3	163.7	114.9152	81	81	81		1.001	5.808	514
2042	332.315	336.214		0.16	0.17	1.33	1.08	0.26	95	94	81	2.01	0.00	83	0.015	97	97	72.3	0.10	0.70	15.45	88.2	163.7	160.2	75.3	163.5	114.35426	81	81	81		1.001	5.810	513
2043	332.479	336.379		0.16	0.17	1.34	1.08	0.26	95	94	81	2.01	0.00	83	0.015	97	96	72.3	-0.08	0.74	15.52	88.1	163.5	160.1	75.3	163.3	113.76704	81	81	81		1.001	6.135	541
2044	332.642	336.544		0.16	0.16	1.34	1.08	0.26	95	94	81	2.02	0.00	83	0.016	93	93	72.2	0.15	0.73	15.43	88.0	163.4	160.0	75.2	163.2	113.61034	81	81	81		1.001	6.076	535
2045	332.806	336.709		0.16	0.17	1.35	1.09	0.26	95	94	81	2.02	0.00	83	0.016	94	93	72.2	0.03	0.76	15.52	87.9	163.3	160.0	75.2	163.1	113.52749	81	81	81		1.001	6.303	555
2046	332.969	336.874		0.16	0.17	1.34	1.08	0.26	95	94	81	2.00	0.00	83	0.014	100	100	72.2	0.00	0.81	15.61	87.7	163.1	159.7	75.2	162.9	113.59601	81	81	81		1.001	6.738	592
2047	333.133	337.039		0.16	0.16	1.34	1.09	0.26	95	94	81	2.02	0.00	83	0.013	104	104	72.2	-0.07	0.66	15.53	87.5	163.0	159.6	75.2	162.8	113.72665	81	81	81		1.001	5.488	481
2048	333.297	337.204		0.16	0.17	1.34	1.09	0.26	95	94	81	2.01	0.00	83	0.014	100	100	72.2	0.03	0.70	15.45	87.4	162.8	159.5	75.3	162.6	113.49416	81	81	81		1.001	5.814	508
2049	333.461	337.369		0.16	0.17	1.34	1.08	0.26	95	94	81	2.00	0.00	83	0.015	97	96	72.3	-0.11	0.76	15.44	87.2	162.7	159.3	75.2	162.4	112.8667	81	81	81		1.001	6.299	550
2050	333.625	337.534		0.16	0.16	1.34	1.09	0.26	95	94	81	2.01	0.00	83	0.014	100	100	72.1	0.20	0.78	15.45	87.2	162.6	159.2	75.2	162.4	112.36562	81	81	81		1.001	6.459	564
2051	333.789	337.700		0.16	0.17	1.32	1.08	0.26	95	94	81	2.00	0.00	85	0.015	97	97	72.2	-0.05	0.72	15.41	87.0	162.4	159.0	75.2	162.2	129.78777	81	81	81		1.001	5.975	520
2052	333.953	337.865		0.16	0.17	1.33	1.09	0.26	95	94	81	2.02	0.00	90	0.014	101	100	72.2	-0.01	0.70	15.53	86.8	162.3	158.9	75.2	162.1	144.22977	81	81	81		1.001	5.812	505
2053	334.117	338.029		0.16	0.16	1.34	1.08	0.26	95	94	81	2.01	0.00	92	0.014	101	100	72.1	0.11	0.76	15.54	86.7	162.1	158.7	75.2	161.9	152.33763	81	82	81		1.001	6.302	547
2054	334.281	338.194		0.16	0.17	1.34	1.09	0.26	95	94	81	2.02	0.00	93	0.014	101	101	71.8	0.28	0.74	15.58	86.5	162.0	158.6	75.2	161.7	159.62691	82	82	81		1.001	6.125	531
2055	334.444	338.359		0.16	0.16	1.34	1.09	0.26	95	94	81	2.01	0.00	94	0.016	94	94	71.6	0.20	0.81	15.45	86.4	161.9	158.5	75.2	161.6	166.57124	82	82	81		1.001	6.775	586
2056	334.607	338.524		0.16	0.17	1.35	1.09	0.26	95	94	81	2.00	0.00	96	0.015	98	98	71.2	0.36	0.78	15.41	86.4	161.8	158.5	75.2	161.6	174.79889	82	82	81		1.001	6.459	559
2057	334.771	338.689		0.16	0.17	1.35	1.09	0.26	95	93	81	2.02	0.00	97	0.015	98	98	70.8	0.44	0.70	15.58	86.4	161.7	158.4	75.1	161.5	184.46634	82	82	81		1.001	5.814	503
2058	334.934	338.854		0.16	0.16	1.35	1.09	0.26	95	93	81	2.02	0.00	99	0.014	101	101	70.2	0.56	0.72	15.42	86.4	161.8	158.5	75.1	161.6	194.39861	82	82	81		1.001	5.974	517
2059	335.098	339.019		0.16	0.17	1.35	1.09	0.26	95	93	81	2.01	0.00	102	0.015	99	98	69.5	0.70	0.78	15.43	86.5	162.0	158.6	75.2	161.7	207.43921	82	83	81		1.001	6.460	559
2060	335.262	339.184		0.16	0.17	1.34	1.09	0.26	95	93	81	2.03	0.00	105	0.014	102	102	68.9	0.61	0.74	15.50	87.1	162.7	159.2	75.2	162.3	219.11737	83	83	81		1.001	6.138	535
2061	335.425	339.348		0.16	0.16	1.34	1.09	0.26	94	93	81	2.02	0.00	107	0.016	96	95	68.2	0.66	0.72	15.51	87.7	163.3	159.8	75.1	162.9	227.85751	83	83	81		1.001	5.976	525
2062	335.588	339.512		0.16	0.16	1.35	1.09	0.26	94	93	81	2.03	0.00	109	0.012	111	110	67.8	0.42	0.72	15.44	88.3	163.9	160.4	75.1	163.4	234.7303	83	84	81		1.001	5.980	529
2063	335.752	339.676		0.16	0.16	1.34	1.09	0.26	94	93	80	2.02	0.00	111	0.015	100	98	67.0	0.77	0.76	15.58	89.1	164.8	161.2	75.2	164.3	241.39119	84	84	80		1.001	6.281	560
2064	335.915	339.841		0.16	0.17	1.34	1.09	0.26	94	93	80	2.04	0.00	112	0.016	96	96	66.4	0.66	0.69	15.46	89.8	165.5	161.9	75.2	165.0	246.51575	84	84	80		1.001	5.714	514
2065	336.078	340.005		0.16	0.16	1.34	1.09	0.26	94	93	80	2.04	0.00	112	0.014	103	102	65.6	0.74	0.74	15.50	90.8	166.5	162.8	75.2	166.0	250.01813	84	85	80		1.001	6.111	556
2066	336.241	340.169		0.16	0.16	1.34	1.09	0.26	94	93	80	2.05	0.00	113	0.015	99	99	65.0	0.64	0.78	15.51	91.9	167.6	163.9	75.1	167.0	251.81233	84	85	80		1.001	6.469	596
2067	336.404	340.333		0.16	0.16	1.34	1.08	0.26	94	93	80	2.04	0.00	113	0.014	103	102	64.3	0.71	0.72	15.45	92.8	168.5	164.8	75.1	168.0	255.92773	85	85	80		1.001	5.983	556
2068	336.567	340.496		0.16	0.16	1.34	1.08	0.26	94	93	80	2.05	0.00	115	0.015	99	98	63.5	0.82	0.72	15.58	93.9	169.5	165.8	75.1	169.0	260.03104	85	85	80		1.001	5.982	562
2069	336.729	340.660		0.16	0.16	1.35	1.08	0.26	94	93	79	2.05	0.00	116	0.016	96	96	62.8	0.63	0.70	15.44	94.9	170.7	166.8	75.1	170.0	263.44678	85	86	79		1.001	5.822	553
2070	336.891	340.824		0.16	0.16	1.34	1.08	0.26	94	93	79	2.04	0.00	117	0.015	99	99	62.3	0.55	0.72	15.54	96.0	171.7	167.8	75.1	171.1	266.29321	86	86	79		1.001	5.985	575
2071	337.054	340.987		0.16	0.16	1.34	1.08	0.26	94	93	79	2.04	0.00	117	0.016	96	95	61.3	1.04	0.74	15.53	97.2	172.8	168.9	75.1	172.3	269.23746	86	86	79		1.001	6.146	598
2072	337.217	341.151		0.16	0.16	1.34	1.08	0.26	94	93	80	2.06	0.00	118	0.014	103	102	60.6	0.63	0.67	15.50	98.2	174.0	170.0	75.1	173.3	271.27731	86	87	80		1.001	5.572	548
2073	337.379	341.314		0.16	0.16	1.34	1.07	0.26	94	93	80	2.05	0.00	118	0.015	99	98	59.8	0.79	0.76	15.57	99.4	175.1	171.1	75.1	174.5	273.70432	86	87	80		1.001	6.310	628
2074	337.542	341.477		0.16	0.16	1.34	1.07	0.26	94	93	79	2.05	0.00	118	0.015	100	98	59.1	0.76	0.63	15.42	100.4	176.1	172.1	75.1	175.5	273.96228	87	87	79		1.001	5.212	524
2075	337.704	341.640		0.16	0.16	1.34	1.08	0.26	94	93	79	2.06	0.00	118	0.015	99	98	58.3	0.80	0.68	15.55	101.7	177.3	173.2	75.0	176.7	274.84683	87	87	79		1.001	5.662	576
2076	337.866	341.803		0.16	0.16	1.33	1.07	0.26	94	93	79	2.07	0.00	119	0.015	99	98	57.4	0.84	0.80	15.40	102.8	178.4	174.3	75.0	177.8	275.82431	87	87	79		1.001	6.636	683
2077	338.029	341.967		0.16	0.16	1.33	1.07	0.26	94	93	79	2.06	0.00	119	0.016	97	96	57.0	0.48	0.72	15.58	103.9	179.6	175.3	75.0	178.9	276.73764	87	87	79		1.001	5.987	623
2078	338.191	342.129		0.16	0.16	1.33	1.06	0.26	94	93	79	2.07	0.00	119	0.015	99	98	56.1	0.86	0.80	15.48	105.1	180.7	176.5	75.0	180.1	278.29193	87	88	79		1.001	6.637	698
2079	338.354	342.291		0.16	0.16	1.33	1.07	0.26	94	93	79	2.06	0.00	119	0.016	97	95	55.2	0.93	0.68	15.53	106.1	181.8	177.5	75.1	181.1	279.3974	88	88	79		1.001	5.664	602
2080	338.516	342.454		0.16	0.16	1.34	1.07	0.26	94	93	79	2.06	0.00	116	0.015	99	98	54.8	0.33	0.80	15.48	107.3	182.9	178.6	75.0	182.3	274.29431	87	87	79		1.001	6.631	712
2081	338.679	342.617		0.16	0.16	1.33	1.06	0.26	94	93	79	2.06	0.00	99	0.015	98	97	54.5	0.36	0.74	15.56	108.4	184.0	179.7	75.0	183.4	251.44527	86	84	79		1.001	6.139	666
2082	338.841	342.780		0.16	0.16	1.33	1.06	0.26	94	93	79	2.05	0.00	94	0.014	100	100	54.1	0.42	0.71	15.55	109.0	184.4	180.1	75.0	184.0	237.4176	86	81	79		1.001	5.929	647
2083	339.005	342.943		0.16	0.16	1.32	1.06	0.26	94	93	79	2.05	0.00	91	0.014	101	99	53.8	0.25	0.70	15.42	109.3	184.6	180.3	75.0	184.2	228.87714	85	80	79		1.001	5.852	640
2084	339.168	343.107		0.16	0.16	1.32	1.06	0.26	94	93	79	2.03	0.00	91	0.014	101	100	53.6	0.21	0.72	15.37	109.4	184.7	180.4	74.9	184.3	221.51956	84	78	79		1.001	5.989	656
2085	339.331	343.270		0.16	0.16	1.33	1.07	0.26	94	93	79	2.05	0.00	90	0.014	101	99	53.4	0.23	0.74	15.43	109.6	184.9	180.6	74.9	184.5	213.82823	83	78	79		1.001	6.150	675
2086	339.494	343.434		0.16	0.16	1.33	1.07	0.26	94	93	79	2.04	0.00	89	0.014	101	100	53.2	0.19	0.72	15.47	109.7	185.1	180.8	75.0	184.7	208.46385	83	77	79		1.001	5.987	658
2087	339.658	343.598		0.16	0.16	1.33	1.07	0.26	94	93	79	2.04	0.00	88	0.014	101	100	53.2	0.02	0.74	15.56	109.8	185.2	180.8	75.0	184.8	204.36867	83	77	79		1.001	6.149	676
2088	339.820	343.762		0.16	0.16	1.32	1.07	0.26	94	93	79	2.03	0.00	87	0.014	100	100	52.8	0.33	0.78	15.50	110.0	185.4	181.1	75.0	185.0	200.79129	83	76	79		1.001	6.470	713
2089	339.983	343.925		0.16	0.16	1.33	1.07	0.26	94	93	79	2.04	0.00	87	0.015	97	96	52.9	-0.08	0.72	15.48	110.1	185.4	181.1	75.0	185.1	198.20487	83	76	79		1.001	5.985	659
2090	340.146	344.089		0.16	0.16	1.33	1.08	0.26	94	92	78	2.04	0.00	85	0.014	100	100	52.7	0.23	0.76	15.46	110.2	185.5	181.2	74.9	185.1	196.79582	82	76	78		1.001	6.309	696
2091	340.309	344.254		0.16	0.17	1.33	1.08	0.26	94	92	79	2.05	0.00	85	0.015	97	97	52.7	-0.05	0.70	15.50	110.2	185.6	181.3	74.9	185.2	194.99858	82	76	79		1.001	5.855	646
2092	340.472	344.418		0.16	0.16	1.33	1.07	0.26	94	92	79	2.04	0.00	85	0.016	94	93	52.3	0.39	0.78	15.50	110.3	185.6	181.3	74.9	185.2	192.72681	82	77	79		1.001	6.470	715
2093	340.635	344.583		0.16	0.17	1.34	1.08	0.26	94	92	79	2.04	0.00	84	0.015	97	97	52.5	-0.15	0.74	15.46	110.4	185.6	181.4	74.9	185.3	190.21782	82	77	79		1.001	6.146	679
2094	340.799	344.747		0.16	0.16	1.33	1.08	0.26	94	92	79	2.03	0.00	84	0.015	97	96	52.4	0.09	0.72	15.44	110.4	185.7	181.4	74.9	185.3	187.62351	82	77	79		1.001	5.988	662
2095	340.962	344.912		0.16	0.16	1.33	1.08	0.26	94	92	79	2.02	0.00	84	0.016	94	94	52.5	-0.07	0.76	15.48	110.4	185.7	181.4	74.9	185.3	185.21645	82	77	79		1.001	6.310	698
2096	341.126	345.076		0.16	0.16	1.33	1.08	0.26	93	92	79	2.04	0.00	84	0.013	105	103	52.3	0.22	0.70	15.40	110.5	185.7	181.4	74.8	185.3	182.745	82	78	79		1.001	5.824	644
2097	341.289	345.241		0.16	0.16	1.33	1.08	0.26	93	92	78	2.02	0.00	84	0.015	97	97	52.2	0.07	0.72	15.49	110.5	185.6	181.4	74.8	185.3	180.37625	81	78	78		1.001	5.988	662
2098	341.453	345.405		0.16	0.16	1.33	1.08	0.26	93	92	79	2.04	0.00	84	0.015	97	96	52.2	-0.04	0.70	15.47	110.5	185.7	181.4	74.9	185.4	178.23128	81	78	79		1.001	5.829	645

Elapsed Time	Particulate Sampling Data																	Fuel Weight, lb		Flow, gpm		Temperature Data, oF												
	Gas Meter Cubic Feet (1)	Gas Meter Cubic Feet (2)	Gas Meter Cubic Feet (amb)	Sample Rate, cfm (1)	Sample Rate, cfm (2)	Orifice dH (1)	Orifice dH (2)	Orifice dH (amb)	Meter oF (1)	Meter oF (2)	Meter oF (amb)	Meter Vac. In. Hg. (1)	Meter Vac. In. Hg. (2)	Dilution Tunnel Temp.	Dilution Tunnel dP	Pro. Rate (%) (1)	Pro. Rate (%) (2)	Scale Reading	Weight Change	Load Side Liquid Flow Rate	Boiler Side Liquid Flow Rate (optional)	Thermopile ΔT	Boiler to Heat Exch. Temp.	Heat Exch to Boiler Temp.	Inlet Load Temp.	Outlet Load Temp.	Stack	Filter (1)	Filter (2)	Ambient		Specific Heat of Inlet Water (BTU/lb-°F)	Mass Flow Rate of Inlet Water (lb/min)	Heat Output, Btu
2099	341.616	345.570		0.16	0.17	1.33	1.08	0.26	93	92	79	2.03	0.00	83	0.014	100	100	52.2	0.02	0.74	15.52	110.5	185.7	181.4	74.8	185.3	176.13178	81	78	79		1.001	6.112	676
2100	341.780	345.735		0.16	0.17	1.34	1.08	0.26	93	92	78	2.02	0.00	83	0.016	94	94	52.2	0.02	0.70	15.55	110.5	185.6	181.4	74.8	185.3	174.06616	81	78	78		1.001	5.825	644
2101	341.943	345.900		0.16	0.16	1.33	1.08	0.26	93	92	78	2.04	0.00	83	0.014	100	100	52.1	0.06	0.68	15.58	110.4	185.6	181.3	74.9	185.2	172.12735	81	78	78		1.001	5.661	625
2102	342.106	346.064		0.16	0.16	1.34	1.08	0.26	93	92	78	2.01	0.00	83	0.015	97	96	52.0	0.18	0.72	15.42	110.4	185.6	181.5	74.8	185.3	170.25427	81	78	78		1.001	5.986	662
2103	342.269	346.229		0.16	0.16	1.34	1.08	0.26	93	92	78	2.03	0.00	83	0.014	100	100	52.2	-0.23	0.70	15.48	110.4	185.6	181.3	74.8	185.2	168.40942	81	78	78		1.001	5.824	644
2104	342.433	346.393		0.16	0.16	1.34	1.08	0.26	93	92	78	2.03	0.00	83	0.014	101	100	52.1	0.08	0.74	15.55	110.4	185.5	181.3	74.8	185.2	166.63861	81	79	78		1.001	6.147	679
2105	342.596	346.558		0.16	0.17	1.34	1.08	0.26	93	92	78	2.02	0.00	83	0.014	100	100	52.2	-0.08	0.76	15.52	110.3	185.5	181.2	74.8	185.1	165.02152	81	79	78		1.001	6.310	697
2106	342.759	346.723		0.16	0.17	1.34	1.08	0.26	93	92	78	2.02	0.00	83	0.015	97	97	52.0	0.14	0.74	15.44	110.3	185.4	181.1	74.8	185.1	163.38232	80	79	78		1.001	6.142	678
2107	342.923	346.887		0.16	0.16	1.34	1.08	0.26	93	92	78	2.03	0.00	83	0.015	97	96	52.3	-0.24	0.76	15.38	110.3	185.4	181.1	74.8	185.1	161.77968	80	79	78		1.001	6.304	696
2108	343.087	347.053		0.16	0.17	1.34	1.08	0.26	93	92	78	2.03	0.00	83	0.015	97	97	52.0	0.26	0.70	15.49	110.2	185.4	181.3	74.8	185.1	160.34273	80	79	78		1.001	5.829	643
2109	343.250	347.217		0.16	0.16	1.33	1.08	0.26	93	92	78	2.03	0.00	83	0.015	97	96	52.0	-0.01	0.73	15.54	110.2	185.3	181.1	74.8	185.0	158.97363	80	79	78		1.001	6.091	672
2110	343.414	347.381		0.16	0.16	1.33	1.07	0.26	93	92	78	2.01	0.00	83	0.016	94	93	52.0	-0.01	0.72	15.47	110.1	185.2	181.1	74.8	184.9	157.57536	80	79	78		1.001	5.988	660
2111	343.578	347.545		0.16	0.16	1.33	1.08	0.26	93	92	78	2.02	0.00	82	0.013	105	103	52.1	-0.03	0.70	15.51	110.1	185.1	181.0	74.8	184.8	156.24895	80	79	78		1.001	5.824	642
2112	343.741	347.710		0.16	0.16	1.34	1.08	0.26	93	92	78	2.03	0.00	82	0.015	97	97	52.0	0.07	0.72	15.48	110.0	185.1	181.0	74.8	184.8	154.93102	80	79	78		1.001	5.987	659
2113	343.905	347.875		0.16	0.17	1.34	1.08	0.26	93	92	78	2.02	0.00	82	0.015	97	97	51.9	0.04	0.68	15.46	109.9	185.0	180.9	74.8	184.7	153.69733	80	79	78		1.001	5.662	623
2114	344.068	348.039		0.16	0.16	1.34	1.08	0.26	93	92	78	2.03	0.00	82	0.014	100	99	52.1	-0.14	0.70	15.45	109.8	185.0	180.8	74.8	184.7	152.53966	80	79	78		1.001	5.823	640
2115	344.231	348.205		0.16	0.17	1.34	1.08	0.26	93	92	78	2.01	0.00	82	0.014	100	101	52.1	0.01	0.51	15.53	109.7	184.9	181.2	74.8	184.5	151.42937	80	79	78		1.001	4.205	462
2116	344.395	348.370		0.16	0.17	1.34	1.08	0.26	93	92	78	2.03	0.00	82	0.014	101	100	52.1	0.01	0.51	15.47	109.5	184.8	181.7	74.8	184.3	150.37178	80	79	78		1.001	4.200	461
2117	344.558	348.534		0.16	0.16	1.34	1.08	0.26	93	92	78	2.03	0.00	82	0.015	97	96	52.1	-0.07	0.49	15.56	109.5	184.7	181.6	74.7	184.2	149.45111	80	79	78		1.001	4.057	445
2118	344.721	348.698		0.16	0.16	1.34	1.08	0.26	93	92	78	2.02	0.00	82	0.013	104	103	52.1	-0.01	0.54	15.52	109.4	184.7	181.6	74.9	184.3	148.54492	80	79	78		1.001	4.475	490
2119	344.885	348.863		0.16	0.17	1.34	1.08	0.26	93	92	78	2.03	0.00	82	0.013	105	104	52.1	0.06	0.50	15.49	109.3	184.6	181.5	74.9	184.2	147.53835	80	79	78		1.001	4.155	455
2120	345.049	349.027		0.16	0.16	1.34	1.08	0.26	93	92	78	2.03	0.00	82	0.016	94	93	52.1	0.00	0.54	15.45	109.2	184.5	181.5	75.0	184.1	146.562	80	79	78		1.001	4.530	495
2121	345.213	349.192		0.16	0.17	1.33	1.08	0.26	93	91	78	2.02	0.00	82	0.014	101	100	52.2	-0.08	0.51	15.49	109.1	184.5	181.4	75.0	184.1	145.63797	79	79	78		1.001	4.207	459
2122	345.377	349.357		0.16	0.17	1.33	1.08	0.26	93	91	78	2.02	0.00	82	0.014	101	100	52.0	0.12	0.51	15.52	109.1	184.5	181.4	75.0	184.0	144.78976	79	79	78		1.001	4.205	459
2123	345.540	349.522		0.16	0.16	1.33	1.08	0.26	93	92	78	2.03	0.00	82	0.015	97	97	52.1	-0.10	0.58	15.47	109.1	184.4	181.0	75.0	184.0	144.01013	79	79	78		1.001	4.854	530
2124	345.704	349.686		0.16	0.16	1.34	1.08	0.26	93	91	78	2.03	0.00	82	0.014	101	100	52.1	0.04	0.54	15.44	109.0	184.3	180.9	75.0	184.0	143.51079	79	79	78		1.001	4.530	494
2125	345.867	349.851		0.16	0.17	1.34	1.08	0.26	93	91	78	2.02	0.00	82	0.013	104	104	52.1	-0.05	0.56	15.49	109.0	184.3	180.8	74.9	183.9	142.68024	79	79	78		1.001	4.688	511
2126	346.030	350.015		0.16	0.16	1.34	1.08	0.26	92	91	78	2.02	0.00	82	0.015	97	96	52.1	0.09	0.56	15.43	108.9	184.3	180.8	74.9	183.8	141.75143	79	79	78		1.001	4.693	512
2127	346.193	350.180		0.16	0.17	1.34	1.08	0.26	93	91	78	2.01	0.00	82	0.015	97	97	52.2	-0.12	0.64	15.49	108.9	184.2	180.8	74.9	183.8	141.37492	79	79	78		1.001	5.304	578
2128	346.356	350.344		0.16	0.16	1.34	1.08	0.26	92	91	78	2.03	0.00	82	0.013	104	103	52.1	0.06	0.60	15.55	108.8	184.1	180.7	74.9	183.8	140.3734	79	79	78		1.001	5.012	546
2129	346.520	350.509		0.16	0.17	1.34	1.08	0.26	93	91	78	2.03	0.00	82	0.013	105	104	52.1	0.06	0.56	15.53	108.7	184.0	180.7	74.9	183.6	139.67967	79	79	78		1.001	4.689	510
2130	346.683	350.674		0.16	0.16	1.34	1.08	0.26	92	91	78	2.03	0.00	82	0.014	100	100	52.0	0.05	0.54	15.43	108.7	184.0	180.6	74.9	183.6	139.20299	79	79	78		1.001	4.530	493
2131	346.847	350.840		0.16	0.17	1.34	1.11	0.26	92	91	78	2.03	0.00	81	0.014	101	101	52.1	-0.09	0.54	15.52	108.5	183.9	180.5	74.9	183.5	138.34763	79	79	78		1.001	4.529	492
2132	347.011	351.007		0.16	0.17	1.34	1.12	0.26	92	91	77	2.02	0.00	81	0.015	97	98	52.1	-0.04	0.62	15.38	108.5	183.8	180.4	75.0	183.4	137.87181	79	79	77		1.001	5.180	563
2133	347.174	351.174		0.16	0.17	1.33	1.11	0.26	92	91	78	2.03	0.00	81	0.014	100	101	52.0	0.13	0.49	15.52	108.4	183.7	180.3	75.0	183.4	137.4464	79	79	78		1.001	4.045	439
2134	347.338	351.341		0.16	0.17	1.34	1.12	0.26	92	91	78	2.02	0.00	81	0.015	97	98	52.1	-0.12	0.58	15.58	108.3	183.6	180.3	75.0	183.3	136.48874	79	79	78		1.001	4.858	527
2135	347.502	351.508		0.16	0.17	1.33	1.11	0.26	92	91	78	2.03	0.00	81	0.014	101	101	52.1	-0.02	0.60	15.56	108.2	183.6	180.2	75.0	183.2	136.38707	79	79	78		1.001	5.018	544
2136	347.666	351.675		0.16	0.17	1.34	1.11	0.26	92	91	78	2.03	0.00	81	0.013	105	105	52.2	-0.09	0.60	15.50	108.1	183.5	180.1	75.0	183.1	135.68022	79	79	78		1.001	5.007	542
2137	347.829	351.842		0.16	0.17	1.33	1.11	0.26	92	91	78	2.01	0.00	81	0.015	97	98	52.3	-0.01	0.60	15.48	108.0	183.4	180.0	75.0	183.0	135.0695	79	79	78		1.001	4.981	539
2138	347.992	352.009		0.16	0.17	1.35	1.11	0.26	92	91	77	2.02	0.00	81	0.013	104	105	52.2	0.10	0.58	15.56	108.0	183.3	180.0	75.0	183.0	134.43224	79	79	77		1.001	4.854	525
2139	348.155	352.176		0.16	0.17	1.34	1.11	0.26	92	91	77	2.02	0.00	81	0.015	97	98	52.2	-0.01	0.53	15.45	107.8	183.2	179.9	75.0	182.8	133.88574	79	79	77		1.001	4.373	472
2140	348.319	352.343		0.16	0.17	1.34	1.12	0.26	92	91	77	2.03	0.00	81	0.013	105	105	52.1	0.06	0.58	15.50	107.7	183.1	179.8	75.0	182.7	133.09869	79	79	77		1.001	4.857	524
2141	348.482	352.510		0.16	0.17	1.34	1.11	0.26	92	91	77	2.01	0.00	81	0.015	97	98	52.2	-0.09	0.58	15.46	107.6	183.0	179.7	75.1	182.7	133.1666	79	79	77		1.001	4.859	524
2142	348.646	352.677		0.16	0.17	1.34	1.12	0.26	92	91	77	2.02	0.00	81	0.013	105	105	52.1	0.05	0.57	15.54	107.5	182.9	179.6	75.1	182.6	132.84833	79	79	77		1.001	4.698	506
2143	348.809	352.844		0.16	0.17	1.34	1.12	0.26	92	91	78	2.03	0.00	81	0.014	100	101	52.1	0.00	0.55	15.52	107.3	182.8	179.5	75.1	182.4	132.58592	79	79	78		1.001	4.535	487
2144	348.973	353.011		0.16	0.17	1.34	1.12	0.26	92	91	77	2.03	0.00	81	0.014	101	101	52.3	-0.13	0.53	15.50	107.3	182.7	179.5	75.1	182.4	131.88026	79	79	77		1.001	4.377	470
2145	349.137	353.178		0.16	0.17	1.33	1.11	0.26	92	91	77	2.03	0.00	81	0.016	94	95	52.2	0.11	0.62	15.47	107.2	182.7	179.4	75.1	182.3	131.50455	79	79	77		1.001	5.181	556
2146	349.300	353.345		0.16	0.17	1.34	1.12	0.26	92	91	77	2.03	0.00	81	0.014	100	101	52.1	0.03	0.53	15.44	107.0	182.5	179.2	75.1	182.1	130.91916	79	79	77		1.001	4.394	470
2147	349.464	353.512		0.16	0.17	1.33	1.12	0.26	92	91	77	2.02	0.00	81	0.014	101	101	52.2	-0.11	0.57	15.55	107.0	182.4	179.2	75.1	182.1	130.24587	79	79	77		1.001	4.700	503
2148	349.628	353.679		0.16	0.17	1.34	1.12	0.26	92	91	77	2.03	0.00	81	0.014	101	101	52.3	-0.01	0.57	15.41	106.7	182.3	179.1	75.2	181.9	129.82643	79	79	77		1.001	4.700	502
2149	349.791	353.847		0.16	0.17	1.34	1.12	0.26	92	91	77	2.03	0.00	81	0.015	97	98	52.2	0.10	0.51	15.43	106.7	182.2	179.0	75.2	181.9	129.27377	79	79	77		1.001	4.215	450
2150	349.954	354.014		0.16	0.17	1.34	1.11	0.26	92	91	77	2.02	0.00	93	0.015	98	99	52.1	0.04	0.55	15.52	106.6	182.1	178.9	75.2	181.8	159.0517	80	80	77		1.001	4.538	484
2151	350.117	354.180		0.16	0.17	1.34	1.11	0.26	92	91	77	2.01	0.00	83	0.015	97	97	52.0	0.12	0.60	15.48	106.5	182.0	178.8	75.2	181.7	151.95293	79	79	77		1.001	5.023	535
2152	350.281	354.348		0.16	0.17	1.35	1.12	0.26	92	91	77	2.02	0.00	82	0.016	94	95	51.9	0.07	0.49	15.44	106.3	181.9	178.8	75.2	181.5	147.11572	79	79	77		1.001	4.053	431
2153	350.444	354.515		0.16	0.17	1.35	1.12	0.26	92	91	77	2.02	0.00	81	0.015	97	98	52.0	-0.06	0.60	15.49	106.2	181.8	178.6	75.3	181.5	143.88669	79	79	77		1.001	5.018	534
2154	350.608	354.682		0.16	0.17	1.35	1.12	0.26	92	91	77	2.01	0.00	81	0.015	97	98	51.9	0.05	0.57	15.49	106.1	181.8	178.5	75.3	181.4	140.89833	79	79	77		1.001	4.699	499
2155	350.772	354.850		0.16	0.17	1.34	1.12	0.26	92	91	77	2.01	0.00	81	0.014	101	102	51.9	0.02	0.58	15.48	106.0	181.7	178.5	75.3	181.3	138.61696	79	79	77		1.001	4.860	516
2156	350.936	355.017		0.16	0.17	1.34	1.12	0.26	92	91	77	2.02	0.00	81	0.015	97	98	51.8	0.07	0.55	15.46	105.9	181.6	178.4	75.3	181.2	136.93208	79	79	77		1.001	4.536	481
2157	351.100	355.184		0.16	0.17	1.33	1.12	0.26	92	91	77	2.02	0.00	81	0.013	105	105	51.8	0.05	0.55	15.53	105.7	181.5	178.2	75.4	181.1	135.50723	79	79	77		1.001	4.533	480
2158	351.263	355.352		0.16	0.17	1.35	1.12	0.26	92	91	77	2.02	0.00	81	0.015	97	98	51.9	-0.14	0.56	15.48	105.6	181.4	178.1	75.4	181.0	134.22525	79	79	77		1.001	4.697	497
2159	351.427	355.520		0.16	0.17	1.35	1.12	0.26	92	91	77	2.02	0.00	81	0.014	101	102	51.9	-0.01	0.58	15.53	105.5	181.2	178.0	75.4	180.9	132.32066	79	79	77		1.001	4.858	513
2160	351.591	355.687		0.16	0.17	1.35	1.12	0.26	92	91	77	2.02	0.00	81	0.015	97	98	51.9	0.02	0.49	15.47	105.4	181.1	177.9	75.4	180.8	131.14038	79	79	77		1.001	4.051	427

Elapsed Time	Particulate Sampling Data																	Fuel Weight, lb		Flow, gpm		Temperature Data, oF												
	Gas Meter Cubic Feet (1)	Gas Meter Cubic Feet (2)	Gas Meter Cubic Feet (amb)	Sample Rate, cfm (1)	Sample Rate, cfm (2)	Orifice dH (1)	Orifice dH (2)	Orifice dH (amb)	Meter oF (1)	Meter oF (2)	Meter oF (amb)	Meter Vac. In. Hg. (1)	Meter Vac. In. Hg. (2)	Dilution Tunnel Temp.	Dilution Tunnel dP	Pro. Rate (%) (1)	Pro. Rate (%) (2)	Scale Reading	Weight Change	Load Side Liquid Flow Rate	Boiler Side Liquid Flow Rate (optional)	Thermopile ΔT	Boiler to Heat Exch. Temp.	Heat Exch to Boiler Temp.	Inlet Load Temp.	Outlet Load Temp.	Stack	Filter (1)	Filter (2)	Ambient		Specific Heat of Inlet Water (BTU/lb-°F)	Mass Flow Rate of Inlet Water (lb/min)	Heat Output, Btu
2161	351.754	355.854		0.16	0.17	1.35	1.12	0.26	92	91	77	2.02	0.00	81	0.015	97	98	51.9	-0.01	0.60	15.53	105.4	181.1	177.9	75.4	180.7	129.8289	79	79	77		1.001	5.020	530
2162	351.917	356.022		0.16	0.17	1.34	1.12	0.26	92	91	77	2.01	0.00	81	0.014	100	102	51.9	0.03	0.56	15.53	105.3	180.9	177.7	75.4	180.7	129.36385	79	79	77		1.001	4.695	495
2163	352.081	356.189		0.16	0.17	1.35	1.12	0.26	92	91	77	2.01	0.00	81	0.015	97	98	51.9	-0.01	0.60	15.52	105.1	180.9	177.7	75.4	180.5	128.60211	79	79	77		1.001	5.020	528
2164	352.244	356.356		0.16	0.17	1.34	1.12	0.26	92	91	77	2.01	0.00	81	0.013	104	105	51.9	0.01	0.60	15.55	105.1	180.8	177.6	75.4	180.5	127.91901	79	79	77		1.001	5.019	528
2165	352.408	356.524		0.16	0.17	1.35	1.12	0.26	92	91	77	2.00	0.00	80	0.014	101	102	51.9	-0.01	0.64	15.55	104.9	180.5	177.2	75.4	180.2	127.32398	79	79	77		1.001	5.288	555
2166	352.572	356.691		0.16	0.17	1.34	1.12	0.26	92	91	77	2.03	0.00	81	0.015	97	98	51.9	0.02	0.62	15.45	104.8	180.5	177.0	75.4	180.2	126.84576	79	79	77		1.001	5.177	543
2167	352.735	356.858		0.16	0.17	1.34	1.12	0.26	92	91	77	2.01	0.00	81	0.015	97	98	52.0	-0.08	0.66	15.49	104.7	180.4	176.9	75.3	180.1	126.26637	79	79	77		1.001	5.500	577
2168	352.899	357.026		0.16	0.17	1.33	1.12	0.26	92	90	77	2.02	0.00	80	0.015	97	99	52.0	0.02	0.66	15.52	104.6	180.3	176.8	75.3	180.0	125.46513	79	79	77		1.001	5.504	577
2169	353.063	357.192		0.16	0.17	1.34	1.12	0.26	92	90	77	2.00	0.00	80	0.014	101	101	51.9	0.06	0.58	15.47	104.6	180.2	176.7	75.3	179.8	125.20094	79	79	77		1.001	4.859	509
2170	353.227	357.360		0.16	0.17	1.34	1.12	0.26	92	90	77	2.02	0.00	80	0.013	105	106	51.9	-0.04	0.57	15.45	104.6	180.1	176.7	75.2	179.8	124.82895	79	79	77		1.001	4.698	492
2171	353.390	357.527		0.16	0.17	1.34	1.11	0.26	92	90	77	2.01	0.00	80	0.013	104	105	51.9	0.04	0.60	15.44	104.4	179.9	176.5	75.2	179.6	124.42352	79	79	77		1.001	5.023	525
2172	353.554	357.694		0.16	0.17	1.34	1.11	0.26	91	90	77	2.02	0.00	80	0.016	94	95	51.9	-0.04	0.58	15.51	104.4	179.8	176.3	75.1	179.5	124.21778	79	79	77		1.001	4.853	507
2173	353.717	357.862		0.16	0.17	1.35	1.11	0.26	92	90	77	2.00	0.00	80	0.014	100	102	52.1	-0.20	0.72	15.54	104.4	179.7	175.9	75.0	179.4	123.5014	79	79	77		1.001	5.991	626
2174	353.880	358.029		0.16	0.17	1.34	1.11	0.26	92	90	77	2.02	0.00	80	0.014	100	101	51.9	0.24	0.71	15.44	104.4	179.6	175.8	74.9	179.3	123.58072	79	78	77		1.001	5.890	616
2175	354.044	358.196		0.16	0.17	1.34	1.12	0.26	91	90	77	2.01	0.00	80	0.015	97	98	52.0	-0.15	0.69	15.47	104.3	179.4	175.6	74.8	179.1	123.26223	79	78	77		1.001	5.722	597
2176	354.207	358.363		0.16	0.17	1.34	1.11	0.26	91	90	77	2.02	0.00	80	0.015	97	98	51.9	0.11	0.68	15.48	104.2	179.3	175.5	74.8	179.0	122.58932	78	78	77		1.001	5.664	591
2177	354.372	358.530		0.17	0.17	1.34	1.12	0.26	92	90	77	2.01	0.00	80	0.014	101	101	52.1	-0.17	0.72	15.38	104.1	179.2	175.4	74.8	178.9	121.93644	78	78	77		1.001	5.990	624
2178	354.535	358.698		0.16	0.17	1.34	1.11	0.26	91	90	77	2.01	0.00	80	0.015	97	99	51.9	0.22	0.68	15.56	103.9	179.0	175.2	74.8	178.7	122.06063	78	78	77		1.001	5.666	590
2179	354.699	358.865		0.16	0.17	1.34	1.12	0.26	91	90	77	2.03	0.00	80	0.014	101	101	52.1	-0.19	0.66	15.49	103.8	178.9	175.0	74.7	178.5	121.73829	78	78	77		1.001	5.503	572
2180	354.863	359.032		0.16	0.17	1.34	1.12	0.26	91	90	77	2.03	0.00	80	0.015	97	98	52.1	-0.01	0.66	15.58	103.7	178.7	174.9	74.7	178.4	122.52599	78	78	77		1.001	5.509	572
2181	355.026	359.199		0.16	0.17	1.34	1.11	0.26	91	90	77	2.02	0.00	87	0.013	105	106	51.9	0.14	0.68	15.52	103.6	178.6	174.9	74.7	178.3	148.36528	79	79	77		1.001	5.647	586
2182	355.190	359.366		0.16	0.17	1.34	1.12	0.26	91	90	77	2.01	0.00	82	0.015	98	98	52.0	-0.09	0.66	15.50	103.5	178.4	174.6	74.6	178.1	141.5584	78	78	77		1.001	5.506	571
2183	355.353	359.533		0.16	0.17	1.34	1.12	0.26	91	90	77	2.01	0.00	81	0.013	104	105	51.9	0.09	0.66	15.50	103.4	178.3	174.5	74.6	178.1	137.18471	78	78	77		1.001	5.513	571
2184	355.516	359.701		0.16	0.17	1.34	1.12	0.26	91	90	77	2.02	0.00	80	0.013	104	106	51.9	0.05	0.70	15.42	103.3	178.2	174.4	74.6	177.9	133.5452	78	78	77		1.001	5.827	603
2185	355.679	359.868		0.16	0.17	1.34	1.12	0.26	91	90	77	2.01	0.00	80	0.012	108	110	51.9	0.01	0.70	15.50	103.2	178.1	174.3	74.6	177.8	130.9783	78	78	77		1.001	5.827	602
2186	355.843	360.035		0.16	0.17	1.35	1.12	0.26	91	90	77	2.00	0.00	80	0.014	101	101	51.9	-0.01	0.72	15.47	103.1	177.9	174.2	74.6	177.7	129.00781	78	78	77		1.001	5.989	618
2187	356.007	360.202		0.16	0.17	1.34	1.12	0.26	91	90	77	2.02	0.00	80	0.015	97	98	51.9	-0.05	0.70	15.52	102.9	177.8	174.0	74.6	177.4	127.64728	78	78	77		1.001	5.829	600
2188	356.171	360.370		0.16	0.17	1.34	1.12	0.26	91	90	77	2.01	0.00	80	0.014	101	102	52.0	-0.06	0.72	15.52	102.8	177.6	173.8	74.6	177.3	126.30051	78	78	77		1.001	5.991	616
2189	356.334	360.537		0.16	0.17	1.34	1.12	0.26	91	90	77	2.01	0.00	80	0.014	100	101	51.9	0.15	0.70	15.55	102.6	177.5	173.9	74.6	177.2	124.76637	78	78	77		1.001	5.820	598
2190	356.498	360.704		0.16	0.17	1.34	1.12	0.26	91	90	77	2.01	0.00	80	0.013	105	105	51.9	-0.06	0.66	15.52	102.4	177.3	173.6	74.6	177.1	124.15238	78	78	77		1.001	5.515	566
2191	356.662	360.872		0.16	0.17	1.34	1.12	0.26	91	90	77	2.02	0.00	80	0.013	105	106	51.9	-0.01	0.66	15.47	102.3	177.2	173.5	74.6	176.9	123.78584	78	78	77		1.001	5.506	564
2192	356.825	361.039		0.16	0.17	1.34	1.11	0.26	91	90	77	2.02	0.00	80	0.014	100	101	51.8	0.08	0.68	15.49	102.2	177.1	173.4	74.7	176.8	123.00774	78	78	77		1.001	5.664	579
2193	356.989	361.206		0.16	0.17	1.35	1.12	0.26	91	90	77	2.02	0.00	80	0.014	101	101	52.0	-0.15	0.60	15.50	102.0	176.9	173.3	74.7	176.6	122.72445	78	78	77		1.001	5.020	512
2194	357.153	361.374		0.16	0.17	1.34	1.12	0.26	91	90	77	2.01	0.00	80	0.014	101	102	52.0	-0.03	0.68	15.51	101.7	176.7	173.1	74.7	176.4	122.35145	78	78	77		1.001	5.665	577
2195	357.316	361.541		0.16	0.17	1.34	1.12	0.26	91	90	77	2.01	0.00	80	0.015	97	98	51.9	0.10	0.66	15.43	101.6	176.6	173.0	74.7	176.4	121.8327	78	78	77		1.001	5.502	560
2196	357.479	361.708		0.16	0.17	1.35	1.12	0.26	91	90	77	2.02	0.00	80	0.015	97	98	52.0	-0.13	0.62	15.46	101.5	176.5	172.9	74.7	176.2	121.21935	78	78	77		1.001	5.180	526
2197	357.643	361.875		0.16	0.17	1.35	1.12	0.26	91	90	77	2.00	0.00	80	0.014	101	101	51.9	0.13	0.64	15.53	101.4	176.4	172.8	74.7	176.1	120.8145	78	78	77		1.001	5.342	542
2198	357.806	362.043		0.16	0.17	1.35	1.12	0.26	91	90	77	2.01	0.00	80	0.014	100	102	51.9	-0.04	0.74	15.53	101.2	176.2	172.5	74.8	175.9	120.55633	78	78	77		1.001	6.151	623
2199	357.970	362.210		0.16	0.17	1.35	1.12	0.26	91	90	77	2.00	0.00	80	0.015	97	98	52.0	-0.10	0.70	15.51	101.0	176.1	172.4	74.7	175.8	119.98153	78	78	77		1.001	5.826	589
2200	358.134	362.377		0.16	0.17	1.34	1.12	0.26	91	90	77	2.02	0.00	80	0.013	105	105	52.0	0.01	0.67	15.56	100.9	175.9	172.4	74.7	175.6	120.09118	78	78	77		1.001	5.582	564
2201	358.297	362.545		0.16	0.17	1.34	1.12	0.26	91	90	77	2.02	0.00	80	0.014	100	102	52.0	0.04	0.66	15.44	100.8	175.8	172.1	74.7	175.5	119.99034	78	78	77		1.001	5.507	555
2202	358.461	362.712		0.16	0.17	1.34	1.12	0.26	91	90	77	2.01	0.00	80	0.014	101	101	51.9	0.07	0.64	15.42	100.6	175.6	172.0	74.7	175.3	119.29392	78	78	77		1.001	5.342	538
2203	358.625	362.879		0.16	0.17	1.34	1.12	0.26	91	90	77	2.02	0.00	80	0.015	97	98	52.0	-0.04	0.72	15.42	100.5	175.5	171.9	74.7	175.2	118.70261	78	78	77		1.001	5.993	603
2204	358.788	363.046		0.16	0.17	1.34	1.12	0.26	91	90	77	2.00	0.00	80	0.015	97	98	52.0	-0.08	0.68	15.57	100.3	175.3	171.6	74.7	175.0	118.75377	78	78	77		1.001	5.667	569
2205	358.952	363.214		0.16	0.17	1.34	1.12	0.26	91	90	77	2.01	0.00	80	0.015	97	99	52.0	0.09	0.68	15.48	100.3	175.2	171.6	74.6	175.0	118.0888	78	78	77		1.001	5.665	569
2206	359.115	363.381		0.16	0.17	1.35	1.12	0.26	91	90	77	2.01	0.00	80	0.014	100	101	51.9	0.10	0.66	15.55	100.1	175.0	171.4	74.7	174.7	118.36019	78	78	77		1.001	5.505	552
2207	359.278	363.548		0.16	0.17	1.35	1.12	0.26	91	90	77	2.02	0.00	79	0.013	104	105	52.0	-0.15	0.64	15.51	100.0	174.9	171.5	74.7	174.7	117.56139	78	78	77		1.001	5.345	535
2208	359.441	363.715		0.16	0.17	1.35	1.12	0.26	91	90	77	2.00	0.00	79	0.015	97	98	51.9	0.14	0.60	15.51	99.9	174.8	171.3	74.7	174.5	117.76431	78	78	77		1.001	5.020	502
2209	359.605	363.882		0.16	0.17	1.35	1.12	0.26	91	90	77	2.02	0.00	79	0.012	109	109	51.9	-0.07	0.64	15.45	99.7	174.6	171.0	74.6	174.3	117.04141	78	78	77		1.001	5.346	534
2210	359.768	364.049		0.16	0.17	1.35	1.12	0.26	91	90	77	2.02	0.00	79	0.015	97	98	52.0	-0.04	0.60	15.46	99.5	174.5	171.0	74.6	174.2	116.49371	78	78	77		1.001	4.991	497
2211	359.932	364.216		0.16	0.17	1.34	1.12	0.26	91	90	77	2.00	0.00	79	0.012	109	109	51.9	0.03	0.64	15.56	99.4	174.3	170.7	74.6	174.0	123.8809	78	78	77		1.001	5.341	531
2212	360.096	364.383		0.16	0.17	1.34	1.11	0.26	91	90	77	2.01	0.00	84	0.014	101	102	52.1	-0.12	0.66	15.56	99.3	174.2	170.6	74.6	173.9	141.0553	78	79	77		1.001	5.503	547
2213	360.259	364.550		0.16	0.17	1.34	1.12	0.26	91	90	77	2.00	0.00	80	0.015	97	98	52.0	0.07	0.70	15.51	99.1	174.0	170.5	74.6	173.7	134.94496	78	78	77		1.001	5.830	579
2214	360.423	364.717		0.16	0.17	1.34	1.12	0.26	91	90	77	2.01	0.00	79	0.014	101	101	52.0	-0.02	0.70	15.45	99.0	173.9	170.4	74.6	173.6	130.20656	78	78	77		1.001	5.828	578
2215	360.587	364.884		0.16	0.17	1.34	1.12	0.26	91	90	77	2.02	0.00	79	0.015	97	98	51.9	0.11	0.68	15.46	98.9	173.8	170.3	74.6	173.5	127.11445	78	78	77		1.001	5.670	562
2216	360.750	365.051		0.16	0.17	1.34	1.12	0.26	91	90	77	2.02	0.00	79	0.014	100	101	51.9	-0.01	0.66	15.48	98.8	173.6	170.1	74.6	173.4	125.22358	78	78	77		1.001	5.503	544
2217	360.914	365.218		0.16	0.17	1.34	1.12	0.26	91	90	77	2.00	0.00	79	0.014	101	101	51.9	0.02	0.68	15.53	98.6	173.5	169.9	74.5	173.2	123.46142	78	78	77		1.001	5.660	559
2218	361.077	365.386		0.16	0.17	1.35	1.12	0.26	91	90	77	2.02	0.00	79	0.017	91	93	51.9	-0.06	0.64	15.50	98.5	173.3	169.8	74.5	173.0	122.56654	78	78	77		1.001	5.344	527
2219	361.240	365.553		0.16	0.17	1.34	1.12	0.26	91	90	77	2.00	0.00	79	0.013	104	105	51.9	0.02	0.70	15.56	98.3	173.2	169.6	74.5	172.8	122.01494	78	78	77		1.001	5.843	575
2220	361.403	365.720		0.16	0.17	1.35	1.12	0.26	91	90	77	2.01	0.00	78	0.016	94	95	51.9	0.01	0.64	15.49	98.3	173.1	169.4	74.5	172.8	121.15897	78	78	77		1.001	5.342	526
2221	361.567	365.887		0.16	0.17	1.35	1.12	0.26	91	90	77	2.02	0.00	78	0.012	109	109	52.0	-0.13	0.64	15.44	98.1	172.9	169.3	74.5	172.6	120.38127	78	78	77		1.001	5.343	525
2222	361.730	366.054		0.16	0.17	1.34	1.12	0.26	91	90	77	2.01	0.00	79	0.014	100	101	52.0	0.05	0.66	15.46	98.0	172.8	169.2	74.5	172.5	119.91943	78	78	77		1.001	5.503	540

Elapsed Time	Particulate Sampling Data																	Fuel Weight, lb		Flow, gpm		Temperature Data, oF												
	Gas Meter Cubic Feet (1)	Gas Meter Cubic Feet (2)	Gas Meter Cubic Feet (amb)	Sample Rate, cfm (1)	Sample Rate, cfm (2)	Orifice dH (1)	Orifice dH (2)	Orifice dH (amb)	Meter oF (1)	Meter oF (2)	Meter oF (amb)	Meter Vac. In. Hg. (1)	Meter Vac. In. Hg. (2)	Dilution Tunnel Temp.	Dilution Tunnel dP	Pro. Rate (%) (1)	Pro. Rate (%) (2)	Scale Reading	Weight Change	Load Side Liquid Flow Rate	Boiler Side Liquid Flow Rate (optional)	Thermopile ΔT	Boiler to Heat Exch. Temp.	Heat Exch to Boiler Temp.	Inlet Load Temp.	Outlet Load Temp.	Stack	Filter (1)	Filter (2)	Ambient		Specific Heat of Inlet Water (BTU/lb-°F)	Mass Flow Rate of Inlet Water (lb/min)	Heat Output, Btu
2223	361.894	366.221		0.16	0.17	1.34	1.12	0.26	91	90	77	2.02	0.00	78	0.012	109	109	52.0	0.00	0.76	15.46	97.9	172.6	169.0	74.4	172.3	119.3844	78	78	77		1.001	6.314	619
2224	362.058	366.388		0.16	0.17	1.34	1.12	0.26	91	90	77	2.02	0.00	79	0.016	94	95	51.9	0.10	0.68	15.55	97.8	172.4	168.9	74.4	172.2	118.75903	78	78	77		1.001	5.663	555
2225	362.221	366.556		0.16	0.17	1.34	1.12	0.26	91	90	77	2.02	0.00	79	0.016	94	95	51.8	0.08	0.68	15.51	97.8	172.3	168.8	74.3	172.0	118.18733	78	78	77		1.001	5.672	555
2226	362.385	366.723		0.16	0.17	1.34	1.12	0.26	91	90	77	2.02	0.00	79	0.014	101	101	51.9	-0.12	0.70	15.61	97.8	172.2	168.7	74.2	171.9	117.61391	78	78	77		1.001	5.830	571
2227	362.549	366.890		0.16	0.17	1.34	1.12	0.26	91	90	77	2.00	0.00	78	0.016	94	95	51.9	0.01	0.64	15.52	97.7	172.0	168.5	74.1	171.8	117.59825	78	78	77		1.001	5.343	523
2228	362.712	367.057		0.16	0.17	1.34	1.12	0.26	91	90	77	2.02	0.00	78	0.015	97	98	51.9	-0.03	0.70	15.50	97.5	171.8	168.3	74.0	171.6	117.10501	78	78	77		1.001	5.827	569
2229	362.876	367.224		0.16	0.17	1.35	1.12	0.26	91	90	77	2.01	0.00	78	0.014	101	101	51.9	0.04	0.66	15.53	97.5	171.7	168.1	73.9	171.4	117.04501	78	78	77		1.001	5.505	537
2230	363.039	367.392		0.16	0.17	1.35	1.12	0.26	91	90	77	2.01	0.00	78	0.015	97	98	51.9	0.05	0.70	15.54	97.4	171.6	168.1	73.9	171.3	116.89081	78	78	77		1.001	5.831	569
2231	363.202	367.559		0.16	0.17	1.35	1.12	0.26	91	90	77	2.01	0.00	78	0.014	100	101	51.8	0.02	0.72	15.54	97.3	171.4	167.9	73.9	171.2	116.88235	78	78	77		1.001	5.990	583
2232	363.366	367.726		0.16	0.17	1.35	1.12	0.26	91	90	77	2.01	0.00	78	0.017	91	92	51.9	-0.09	0.76	15.46	97.1	171.3	167.7	73.9	171.0	115.60727	78	78	77		1.001	6.316	614
2233	363.529	367.894		0.16	0.17	1.34	1.12	0.26	91	90	77	2.02	0.00	78	0.013	104	106	52.0	-0.10	0.74	15.43	97.0	171.1	167.6	73.9	170.9	115.05129	78	78	77		1.001	6.152	597
2234	363.693	368.061		0.16	0.17	1.35	1.12	0.26	91	90	77	2.02	0.00	78	0.016	94	95	52.0	-0.03	0.72	15.48	96.8	171.0	167.5	73.9	170.7	115.56854	78	78	77		1.001	5.999	582
2235	363.856	368.228		0.16	0.17	1.34	1.12	0.26	91	90	77	2.01	0.00	78	0.014	100	101	51.9	0.14	0.66	15.40	96.7	170.9	167.3	73.9	170.6	115.37009	78	78	77		1.001	5.497	532
2236	364.020	368.396		0.16	0.17	1.35	1.12	0.26	91	90	77	2.01	0.00	78	0.014	101	102	51.9	-0.03	0.67	15.45	96.6	170.7	167.1	73.9	170.5	114.17215	78	78	77		1.001	5.576	539
2237	364.184	368.563		0.16	0.17	1.34	1.12	0.26	91	90	77	2.01	0.00	78	0.016	94	95	51.9	0.04	0.71	15.48	96.4	170.6	167.1	73.9	170.3	114.78833	78	78	77		1.001	5.866	566
2238	364.348	368.730		0.16	0.17	1.34	1.12	0.26	91	90	77	2.02	0.00	78	0.014	101	101	51.9	0.01	0.64	15.54	96.3	170.4	166.9	73.9	170.2	114.53366	78	78	77		1.001	5.344	515
2239	364.511	368.897		0.16	0.17	1.34	1.12	0.26	91	90	77	2.02	0.00	78	0.014	100	101	52.1	-0.27	0.66	15.52	96.0	170.3	166.8	74.0	170.0	114.36755	78	78	77		1.001	5.505	529
2240	364.675	369.065		0.16	0.17	1.34	1.12	0.26	91	90	77	2.01	0.00	78	0.012	109	110	52.0	0.18	0.74	15.48	95.8	170.1	166.6	74.0	169.8	113.89577	78	78	77		1.001	6.154	590
2241	364.838	369.232		0.16	0.17	1.34	1.12	0.26	91	90	77	2.01	0.00	78	0.013	104	105	52.0	0.01	0.72	15.53	95.7	170.0	166.5	74.0	169.7	113.42001	78	78	77		1.001	5.989	574
2242	365.001	369.399		0.16	0.17	1.35	1.12	0.26	91	90	77	2.02	0.00	79	0.015	97	98	52.0	-0.04	0.64	15.50	95.5	169.8	166.4	74.1	169.5	126.1382	78	78	77		1.001	5.345	511
2243	365.164	369.566		0.16	0.17	1.34	1.12	0.26	91	90	77	2.01	0.00	82	0.014	100	102	52.0	0.04	0.74	15.46	95.3	169.7	166.2	74.1	169.4	135.88474	78	78	77		1.001	6.153	587
2244	365.328	369.733		0.16	0.17	1.34	1.12	0.26	91	90	77	2.02	0.00	79	0.015	97	98	51.9	0.09	0.59	15.50	95.1	169.5	166.1	74.2	169.2	129.73978	78	78	77		1.001	4.865	463
2245	365.492	369.900		0.16	0.17	1.35	1.12	0.26	91	90	77	2.01	0.00	78	0.014	101	101	51.9	-0.01	0.72	15.51	94.8	169.4	165.9	74.2	169.0	125.65247	78	78	77		1.001	5.994	569
2246	365.655	370.067		0.16	0.17	1.35	1.11	0.26	91	90	77	2.01	0.00	78	0.015	97	98	51.9	-0.03	0.62	15.50	94.8	169.2	165.8	74.2	169.0	122.54226	78	78	77		1.001	5.183	492
2247	365.819	370.235		0.16	0.17	1.34	1.12	0.26	91	90	77	2.02	0.00	78	0.015	97	98	52.0	-0.05	0.62	15.50	94.6	169.1	165.9	74.3	168.8	121.53962	78	78	77		1.001	5.183	491
2248	365.982	370.402		0.16	0.17	1.35	1.12	0.26	91	90	77	2.02	0.00	78	0.015	97	98	51.9	0.01	0.72	15.46	94.3	168.9	165.5	74.3	168.6	119.88034	78	78	77		1.001	5.994	566
2249	366.146	370.569		0.16	0.17	1.34	1.12	0.26	91	90	77	2.02	0.00	78	0.015	97	98	52.0	-0.01	0.68	15.48	94.2	168.8	165.4	74.3	168.5	118.84552	78	78	77		1.001	5.666	534
2250	366.310	370.736		0.16	0.17	1.34	1.12	0.26	91	90	77	2.01	0.00	78	0.015	97	98	51.9	0.05	0.72	15.45	94.1	168.7	165.3	74.4	168.4	118.21083	78	78	77		1.001	5.996	565
2251	366.474	370.903		0.16	0.17	1.34	1.12	0.26	91	90	77	2.02	0.00	78	0.015	97	98	51.9	0.01	0.64	15.54	93.9	168.5	165.2	74.4	168.3	117.45905	78	78	77		1.001	5.346	503
2252	366.637	371.071		0.16	0.17	1.35	1.12	0.26	91	90	77	2.01	0.00	78	0.016	94	95	51.9	0.02	0.66	15.47	93.8	168.4	165.0	74.4	168.1	115.80903	78	78	77		1.001	5.507	517
2253	366.801	371.238		0.16	0.17	1.34	1.12	0.26	91	90	77	2.02	0.00	78	0.015	97	98	52.0	-0.11	0.70	15.59	93.6	168.3	164.9	74.4	168.0	115.58984	78	78	77		1.001	5.808	544
2254	366.964	371.405		0.16	0.17	1.35	1.12	0.26	91	90	77	2.02	0.00	78	0.014	100	101	52.0	-0.03	0.67	15.42	93.5	168.1	164.7	74.4	167.9	115.06023	78	78	77		1.001	5.542	519
2255	367.127	371.573		0.16	0.17	1.35	1.12	0.26	91	90	77	2.02	0.00	78	0.013	104	106	51.9	0.10	0.66	15.46	93.3	167.9	164.6	74.4	167.7	114.79938	78	78	77		1.001	5.520	516
2256	367.291	371.740		0.16	0.17	1.35	1.12	0.26	91	90	77	2.01	0.00	78	0.014	101	101	51.9	-0.02	0.66	15.47	93.2	167.8	164.5	74.4	167.6	114.58814	78	78	77		1.001	5.508	514
2257	367.454	371.907		0.16	0.17	1.35	1.12	0.26	91	90	77	2.00	0.00	78	0.014	100	101	51.8	0.18	0.66	15.58	93.1	167.7	164.3	74.3	167.4	114.30622	78	78	77		1.001	5.508	513
2258	367.618	372.074		0.16	0.17	1.35	1.12	0.26	91	90	77	2.01	0.00	78	0.013	105	105	51.9	-0.15	0.62	15.46	93.0	167.5	164.2	74.3	167.3	113.93925	78	78	77		1.001	5.185	483
2259	367.782	372.242		0.16	0.17	1.34	1.12	0.26	91	90	77	2.00	0.00	78	0.015	97	98	52.0	-0.05	0.72	15.44	92.8	167.4	164.0	74.3	167.1	114.12527	78	78	77		1.001	5.996	557
2260	367.946	372.409		0.16	0.17	1.34	1.12	0.26	91	90	77	2.01	0.00	78	0.015	97	98	52.0	-0.04	0.68	15.51	92.8	167.2	163.9	74.2	167.0	114.02284	78	78	77		1.001	5.675	527
2261	368.110	372.576		0.16	0.17	1.34	1.12	0.26	91	90	77	2.00	0.00	78	0.016	94	95	52.0	0.00	0.72	15.43	92.8	167.1	163.9	74.1	166.9	114.18707	78	78	77		1.001	5.994	557
2262	368.273	372.744		0.16	0.17	1.34	1.12	0.26	91	90	77	2.00	0.00	78	0.015	97	98	51.9	0.07	0.66	15.45	92.7	167.0	163.6	74.0	166.7	113.35722	78	78	77		1.001	5.518	512
2263	368.437	372.911		0.16	0.17	1.35	1.12	0.26	91	90	77	2.01	0.00	78	0.014	101	101	51.9	0.00	0.62	15.54	92.7	166.8	163.5	73.9	166.6	113.07581	78	78	77		1.001	5.131	476
2264	368.601	373.079		0.16	0.17	1.34	1.12	0.26	91	90	77	2.02	0.00	78	0.014	101	102	51.8	0.10	0.73	15.50	92.6	166.7	163.3	73.8	166.4	112.88547	78	78	77		1.001	6.062	562
2265	368.764	373.246		0.16	0.17	1.35	1.12	0.26	91	90	77	2.00	0.00	78	0.016	94	95	52.0	-0.16	0.66	15.54	92.5	166.6	163.2	73.8	166.3	112.53724	78	78	77		1.001	5.509	510
2266	368.927	373.413		0.16	0.17	1.35	1.12	0.26	91	90	77	2.02	0.00	78	0.015	97	98	51.9	0.12	0.64	15.42	92.5	166.4	163.1	73.7	166.2	112.4644	78	78	77		1.001	5.342	495
2267	369.091	373.581		0.16	0.17	1.35	1.12	0.26	91	90	77	2.01	0.00	78	0.015	97	98	51.9	0.00	0.68	15.45	92.3	166.3	163.1	73.7	166.0	112.27995	78	78	77		1.001	5.669	524
2268	369.254	373.748		0.16	0.17	1.35	1.12	0.26	91	90	77	2.02	0.00	78	0.015	97	98	51.9	-0.04	0.68	15.47	92.2	166.1	162.7	73.6	165.8	111.88973	78	78	77		1.001	5.669	523
2269	369.418	373.915		0.16	0.17	1.35	1.12	0.26	91	90	77	2.01	0.00	78	0.015	97	98	52.0	-0.14	0.74	15.42	92.1	166.0	162.6	73.6	165.8	111.22435	78	78	77		1.001	6.159	568
2270	369.582	374.082		0.16	0.17	1.34	1.12	0.26	91	90	77	2.00	0.00	78	0.013	105	105	51.9	0.09	0.80	15.56	92.0	165.9	162.6	73.6	165.6	111.08732	78	78	77		1.001	6.642	612
2271	369.745	374.250		0.16	0.17	1.35	1.13	0.26	91	90	77	2.02	0.00	78	0.016	94	95	51.9	0.05	0.67	15.43	91.9	165.7	162.3	73.6	165.4	111.2767	78	78	77		1.001	5.556	511
2272	369.909	374.417		0.16	0.17	1.34	1.12	0.26	91	90	77	2.00	0.00	78	0.015	97	98	52.1	-0.19	0.73	15.51	91.7	165.5	162.3	73.6	165.3	111.56647	78	78	77		1.001	6.099	560
2273	370.073	374.585		0.16	0.17	1.35	1.12	0.26	91	90	77	2.02	0.00	80	0.013	105	106	52.1	0.03	0.68	15.50	91.6	165.4	162.1	73.6	165.2	124.98682	78	78	77		1.001	5.661	519
2274	370.237	374.752		0.16	0.17	1.34	1.12	0.26	91	90	77	2.00	0.00	81	0.014	101	102	51.9	0.14	0.68	15.45	91.5	165.3	162.0	73.6	165.0	131.79845	78	78	77		1.001	5.678	520
2275	370.400	374.919		0.16	0.17	1.35	1.12	0.26	91	90	77	2.01	0.00	79	0.013	104	105	52.0	-0.13	0.72	15.53	91.3	165.2	161.9	73.6	164.9	125.30291	78	78	77		1.001	6.002	549
2276	370.564	375.087		0.16	0.17	1.35	1.12	0.26	91	90	77	2.01	0.00	78	0.014	101	102	52.0	0.04	0.66	15.46	91.1	165.0	161.7	73.6	164.7	121.76544	78	78	77		1.001	5.515	503
2277	370.727	375.255		0.16	0.17	1.35	1.12	0.26	91	90	77	2.01	0.00	78	0.017	91	92	51.9	0.07	0.70	15.49	91.0	164.8	161.5	73.6	164.6	119.13776	78	78	77		1.001	5.840	532
2278	370.890	375.422		0.16	0.17	1.35	1.12	0.26	91	90	77	2.02	0.00	78	0.015	97	98	51.7	0.26	0.66	15.53	90.9	164.8	161.5	73.6	164.5	117.88315	78	78	77		1.001	5.515	502
2279	371.054	375.589		0.16	0.17	1.35	1.12	0.26	91	90	77	2.00	0.00	78	0.014	101	101	51.9	-0.25	0.68	15.51	90.7	164.6	161.2	73.6	164.3	116.6651	77	77	77		1.001	5.678	516
2280	371.218	375.757		0.16	0.17	1.35	1.12	0.26	91	90	77	2.01	0.00	78	0.014	101	102	51.9	0.01	0.60	15.56	90.6	164.5	161.2	73.6	164.2	115.31712	77	78	77		1.001	5.027	456
2281	371.382	375.924		0.16	0.17	1.35	1.12	0.26	91	90	77	2.02	0.00	78	0.013	105	105	51.9	-0.02	0.68	15.50	90.4	164.3	161.1	73.7	164.1	114.97426	77	78	77		1.001	5.653	512
2282	371.545	376.091		0.16	0.17	1.35	1.12	0.26	91	90	77	2.01	0.00	78	0.013	104	105	52.0	-0.02	0.76	15.56	90.3	164.2	160.9	73.7	164.0	114.41351	77	78	77		1.001	6.350	574
2283	371.709	376.259		0.16	0.17	1.34	1.12	0.26	91	90	77	2.01	0.00	78	0.014	101	102	52.0	-0.01	0.60	15.47	90.0	164.1	160.8	73.7	163.7	114.24763	77	78	77		1.001	5.022	453
2284	371.873	376.426		0.16	0.17	1.34	1.12	0.26	91	90	77	2.00	0.00	78	0.014	101	101	51.9	0.02	0.66	15.57	89.9	163.9	160.5	73.7	163.7	113.88815	78	78	77		1.001	5.512	496

Elapsed Time	Particulate Sampling Data																	Fuel Weight, lb		Flow, gpm		Temperature Data, oF												
	Gas Meter Cubic Feet (1)	Gas Meter Cubic Feet (2)	Gas Meter Cubic Feet (amb)	Sample Rate, cfm (1)	Sample Rate, cfm (2)	Orifice dH (1)	Orifice dH (2)	Orifice dH (amb)	Meter oF (1)	Meter oF (2)	Meter oF (amb)	Meter Vac. In. Hg. (1)	Meter Vac. In. Hg. (2)	Dilution Tunnel Temp.	Dilution Tunnel dP	Pro. Rate (%) (1)	Pro. Rate (%) (2)	Scale Reading	Weight Change	Load Side Liquid Flow Rate	Boiler Side Liquid Flow Rate (optional)	Thermopile ΔT	Boiler to Heat Exch. Temp.	Heat Exch to Boiler Temp.	Inlet Load Temp.	Outlet Load Temp.	Stack	Filter (1)	Filter (2)	Ambient		Specific Heat of Inlet Water (BTU/lb-°F)	Mass Flow Rate of Inlet Water (lb/min)	Heat Output, Btu
2285	372.037	376.593		0.16	0.17	1.34	1.12	0.26	91	90	77	2.01	0.00	78	0.015	97	98	52.0	-0.01	0.66	15.44	89.7	163.7	160.4	73.8	163.5	113.39657	78	78	77		1.001	5.512	495
2286	372.200	376.760		0.16	0.17	1.35	1.12	0.26	91	90	77	2.00	0.00	78	0.013	104	105	52.0	-0.02	0.66	15.45	89.6	163.6	160.4	73.7	163.4	113.57407	78	78	77		1.001	5.509	494
2287	372.364	376.928		0.16	0.17	1.34	1.12	0.26	90	90	77	2.02	0.00	78	0.014	101	102	51.9	0.10	0.66	15.46	89.5	163.5	160.2	73.7	163.2	112.65675	77	78	77		1.001	5.511	494
2288	372.527	377.095		0.16	0.17	1.35	1.11	0.26	90	90	77	2.01	0.00	78	0.015	97	98	52.0	-0.10	0.74	15.46	89.4	163.3	160.3	73.7	163.1	112.59085	77	77	77		1.001	6.156	551
2289	372.690	377.262		0.16	0.17	1.35	1.12	0.26	91	90	77	2.00	0.00	78	0.015	97	98	51.9	0.04	0.70	15.45	89.3	163.2	159.9	73.7	163.0	111.92759	77	78	77		1.001	5.838	522
2290	372.854	377.430		0.16	0.17	1.35	1.12	0.26	91	90	77	2.01	0.00	77	0.013	104	106	51.9	0.05	0.63	15.51	89.2	163.1	159.9	73.7	162.9	111.41499	77	77	77		1.001	5.241	468
2291	373.017	377.597		0.16	0.17	1.35	1.12	0.26	90	90	77	2.02	0.00	78	0.013	104	105	51.9	-0.04	0.66	15.44	89.0	162.9	159.8	73.7	162.7	110.71754	77	77	77		1.001	5.510	491
2292	373.181	377.764		0.16	0.17	1.34	1.12	0.26	90	89	77	2.02	0.00	78	0.016	94	95	52.1	-0.17	0.70	15.47	88.9	162.8	159.6	73.7	162.6	110.71722	77	77	77		1.001	5.836	519
2293	373.345	377.931		0.16	0.17	1.35	1.12	0.26	90	90	77	2.02	0.00	78	0.014	101	101	52.1	0.01	0.72	15.52	88.8	162.7	159.5	73.7	162.5	110.60985	77	77	77		1.001	5.997	533
2294	373.509	378.098		0.16	0.17	1.34	1.12	0.26	90	89	77	2.02	0.00	78	0.014	101	101	52.1	-0.01	0.64	15.48	88.6	162.5	159.4	73.7	162.3	110.16282	77	77	77		1.001	5.350	475
2295	373.672	378.265		0.16	0.17	1.34	1.12	0.26	90	89	76	2.00	0.00	81	0.014	101	102	52.0	0.07	0.72	15.49	88.5	162.4	159.4	73.7	162.2	128.26704	78	78	76		1.001	6.002	532
2296	373.836	378.432		0.16	0.17	1.35	1.12	0.26	90	89	77	2.02	0.00	85	0.015	98	99	51.9	0.12	0.74	15.48	88.4	162.3	159.1	73.7	162.0	143.85416	78	78	77		1.001	6.160	545
2297	374.000	378.600		0.16	0.17	1.35	1.12	0.26	90	90	77	2.01	0.00	86	0.014	102	103	51.8	0.12	0.82	15.43	88.3	162.1	159.0	73.6	161.9	153.94989	78	78	77		1.001	6.803	601
2298	374.163	378.767		0.16	0.17	1.35	1.12	0.26	90	89	77	2.01	0.00	88	0.013	105	106	51.4	0.42	0.70	15.49	88.1	162.0	158.8	73.7	161.7	162.46254	78	78	77		1.001	5.828	514
2299	374.326	378.934		0.16	0.17	1.35	1.12	0.26	90	89	77	2.01	0.00	89	0.014	101	102	51.1	0.23	0.60	15.47	88.0	161.9	158.8	73.6	161.7	169.19959	78	78	77		1.001	5.023	443
2300	374.489	379.101		0.16	0.17	1.35	1.12	0.26	90	89	77	2.01	0.00	90	0.015	98	99	50.7	0.42	0.64	15.46	88.0	161.9	158.8	73.7	161.7	179.13104	78	79	77		1.001	5.321	469
2301	374.653	379.268		0.16	0.17	1.36	1.13	0.26	90	89	77	2.01	0.00	93	0.015	99	99	50.2	0.49	0.68	15.55	88.0	161.9	158.7	73.6	161.6	190.62677	78	79	77		1.001	5.675	500
2302	374.816	379.435		0.16	0.17	1.36	1.13	0.26	90	89	77	2.01	0.00	95	0.016	95	96	49.9	0.38	0.68	15.53	88.1	162.0	158.8	73.6	161.7	203.13396	79	79	77		1.001	5.674	501
2303	374.979	379.602		0.16	0.17	1.36	1.13	0.26	90	89	77	2.03	0.00	98	0.014	102	103	49.2	0.68	0.70	15.52	88.5	162.4	159.2	73.6	162.1	214.69478	79	79	77		1.001	5.839	517
2304	375.142	379.769		0.16	0.17	1.35	1.13	0.26	90	89	77	2.03	0.00	100	0.014	102	103	48.8	0.40	0.70	15.54	88.9	162.8	159.6	73.6	162.4	224.2641	79	80	77		1.001	5.838	519
2305	375.306	379.936		0.16	0.17	1.35	1.13	0.26	90	89	77	2.03	0.00	103	0.015	100	100	48.1	0.69	0.66	15.41	89.5	163.5	160.2	73.5	163.0	232.24335	80	80	77		1.001	5.509	494
2306	375.469	380.103		0.16	0.17	1.35	1.13	0.26	90	89	77	2.02	0.00	104	0.015	99	100	47.6	0.46	0.66	15.56	90.3	164.3	160.9	73.5	163.8	237.83818	80	80	77		1.001	5.509	498
2307	375.632	380.269		0.16	0.17	1.35	1.13	0.26	90	89	77	2.03	0.00	106	0.015	99	100	47.2	0.44	0.80	15.51	91.2	165.1	161.7	73.4	164.6	242.46269	80	81	77		1.001	6.645	606
2308	375.795	380.436		0.16	0.17	1.34	1.13	0.26	90	89	77	2.03	0.00	107	0.015	99	101	46.5	0.64	0.64	15.44	92.1	166.0	162.5	73.4	165.4	246.53984	80	81	77		1.001	5.344	493
2309	375.958	380.602		0.16	0.17	1.34	1.12	0.26	90	89	77	2.05	0.00	108	0.016	96	97	45.8	0.73	0.67	15.53	92.9	166.7	163.3	73.3	166.2	250.23195	81	81	77		1.001	5.569	518
2310	376.120	380.768		0.16	0.17	1.35	1.12	0.26	90	89	77	2.03	0.00	109	0.015	99	100	45.1	0.70	0.69	15.48	94.1	167.9	164.3	73.2	167.3	254.28416	81	82	77		1.001	5.721	539
2311	376.283	380.934		0.16	0.17	1.34	1.12	0.26	90	89	77	2.05	0.00	110	0.016	97	97	44.3	0.78	0.70	15.50	95.3	169.1	165.5	73.2	168.5	257.51968	82	82	77		1.001	5.830	556
2312	376.445	381.099		0.16	0.16	1.34	1.12	0.26	90	89	77	2.05	0.00	111	0.016	96	97	44.0	0.39	0.64	15.43	96.5	170.1	166.5	73.1	169.6	260.58267	82	83	77		1.001	5.349	517
2313	376.608	381.265		0.16	0.17	1.34	1.11	0.26	90	89	77	2.05	0.00	111	0.015	100	100	43.2	0.76	0.72	15.39	97.5	171.3	167.6	73.1	170.6	263.26682	82	83	77		1.001	6.001	586
2314	376.770	381.430		0.16	0.17	1.34	1.11	0.26	90	89	77	2.06	0.00	112	0.016	96	97	42.6	0.60	0.64	15.42	98.8	172.5	168.7	73.1	171.8	266.13391	83	83	77		1.001	5.349	529
2315	376.932	381.595		0.16	0.17	1.34	1.11	0.26	90	89	77	2.05	0.00	113	0.016	96	97	41.9	0.75	0.68	15.50	99.8	173.5	169.7	73.1	172.9	269.26526	83	84	77		1.001	5.667	566
2316	377.094	381.760		0.16	0.16	1.34	1.11	0.26	90	89	77	2.07	0.00	114	0.015	99	100	41.4	0.45	0.59	15.51	100.9	174.6	170.9	73.1	174.0	271.91943	84	84	77		1.001	4.872	492
2317	377.256	381.925		0.16	0.17	1.34	1.11	0.26	90	89	77	2.07	0.00	115	0.016	96	97	40.4	0.99	0.70	15.55	101.9	175.7	171.9	73.1	175.0	274.55359	84	84	77		1.001	5.809	593
2318	377.418	382.090		0.16	0.16	1.33	1.11	0.26	90	89	77	2.06	0.00	115	0.015	100	100	39.9	0.55	0.70	15.58	103.0	176.9	173.0	73.2	176.2	276.38763	84	85	77		1.001	5.818	600
2319	377.580	382.256		0.16	0.17	1.33	1.10	0.26	90	89	77	2.08	0.00	115	0.016	96	97	39.1	0.74	0.70	15.50	104.2	178.1	174.1	73.2	177.4	278.42975	84	85	77		1.001	5.838	609
2320	377.741	382.420		0.16	0.16	1.34	1.10	0.26	90	89	77	2.08	0.00	116	0.016	96	96	38.2	0.91	0.68	15.50	105.2	179.2	175.2	73.3	178.5	280.20309	85	85	77		1.001	5.675	598
2321	377.903	382.585		0.16	0.16	1.34	1.10	0.26	90	89	77	2.08	0.00	116	0.017	94	94	37.8	0.43	0.74	15.49	106.5	180.6	176.5	73.3	179.8	280.81659	85	85	77		1.001	6.160	657
2322	378.065	382.749		0.16	0.16	1.33	1.10	0.26	90	89	77	2.07	0.00	116	0.015	100	100	36.9	0.87	0.68	15.41	107.8	181.7	177.7	73.4	181.2	281.67767	85	85	77		1.001	5.676	613
2323	378.226	382.913		0.16	0.16	1.33	1.10	0.26	90	89	76	2.07	0.00	117	0.016	96	96	36.1	0.81	0.70	15.51	108.7	182.8	178.6	73.4	182.1	282.96283	85	86	76		1.001	5.842	636
2324	378.388	383.077		0.16	0.16	1.33	1.09	0.26	90	89	77	2.08	0.00	107	0.014	102	102	35.7	0.43	0.70	15.45	109.8	183.8	179.7	73.4	183.2	271.995	84	85	77		1.001	5.836	641
2325	378.550	383.242		0.16	0.17	1.33	1.09	0.26	90	89	77	2.06	0.00	94	0.012	109	110	35.2	0.46	0.72	15.47	110.8	184.9	180.6	73.5	184.3	251.07304	84	84	77		1.001	6.000	666
2326	378.712	383.407		0.16	0.16	1.33	1.08	0.26	90	89	77	2.07	0.00	90	0.014	101	101	34.9	0.34	0.70	15.47	111.4	185.4	181.1	73.5	184.9	238.2081	83	83	77		1.001	5.785	645
2327	378.874	383.571		0.16	0.16	1.33	1.08	0.26	90	89	77	2.06	0.00	87	0.015	97	97	34.6	0.25	0.71	15.42	111.5	185.6	181.4	73.6	185.1	229.28651	83	83	77		1.001	5.869	655
2328	379.037	383.735		0.16	0.16	1.33	1.08	0.26	90	89	77	2.05	0.00	87	0.013	105	104	34.4	0.17	0.66	15.48	111.7	185.8	181.6	73.6	185.3	221.33415	82	82	77		1.001	5.511	616
2329	379.199	383.900		0.16	0.16	1.33	1.08	0.26	90	89	77	2.06	0.00	86	0.014	100	101	34.3	0.17	0.74	15.48	111.9	186.0	181.8	73.6	185.5	215.01607	81	81	77		1.001	6.163	690
2330	379.361	384.064		0.16	0.16	1.33	1.09	0.26	90	89	77	2.06	0.00	85	0.016	94	94	34.0	0.32	0.70	15.45	112.0	186.1	181.9	73.7	185.7	209.99431	81	81	77		1.001	5.835	654
2331	379.524	384.229		0.16	0.16	1.33	1.09	0.26	90	89	77	2.05	0.00	84	0.014	101	101	33.9	0.08	0.70	15.49	112.2	186.3	182.2	73.7	185.9	206.08337	80	81	77		1.001	5.835	656
2332	379.686	384.394		0.16	0.17	1.33	1.09	0.26	90	89	77	2.04	0.00	84	0.015	97	97	33.6	0.24	0.72	15.48	112.3	186.5	182.3	73.8	186.0	202.89749	80	81	77		1.001	5.998	674
2333	379.849	384.560		0.16	0.17	1.33	1.09	0.26	90	89	77	2.05	0.00	82	0.014	101	101	33.7	-0.04	0.66	15.44	112.4	186.5	182.4	73.7	186.1	200.70367	80	81	77		1.001	5.510	620
2334	380.012	384.725		0.16	0.17	1.33	1.09	0.26	90	89	76	2.05	0.00	81	0.014	101	100	33.5	0.22	0.64	15.46	112.5	186.6	182.4	73.8	186.2	199.05476	80	80	76		1.001	5.354	603
2335	380.175	384.890		0.16	0.16	1.33	1.10	0.26	90	89	77	2.05	0.00	81	0.014	101	100	33.2	0.29	0.69	15.45	112.5	186.7	182.6	73.8	186.3	196.99745	80	80	77		1.001	5.766	649
2336	380.337	385.056		0.16	0.17	1.33	1.10	0.26	90	89	77	2.03	0.00	81	0.016	93	95	33.2	0.00	0.66	15.50	112.6	186.7	182.6	73.8	186.3	194.66515	80	80	77		1.001	5.469	616
2337	380.500	385.221		0.16	0.17	1.33	1.09	0.26	90	89	77	2.04	0.00	81	0.015	97	97	33.2	-0.04	0.66	15.49	112.6	186.8	182.6	73.8	186.4	192.11311	80	80	77		1.001	5.514	622
2338	380.663	385.387		0.16	0.17	1.33	1.10	0.26	90	89	76	2.03	0.00	80	0.016	94	94	33.2	0.05	0.64	15.44	112.6	186.8	182.6	73.8	186.4	189.53947	79	80	76		1.001	5.348	603
2339	380.825	385.552		0.16	0.17	1.32	1.10	0.26	90	89	77	2.05	0.00	80	0.013	104	104	33.1	0.04	0.62	15.48	112.6	186.8	182.6	73.8	186.4	186.99377	79	80	77		1.001	5.184	584
2340	380.988	385.718		0.16	0.17	1.33	1.10	0.26	90	89	77	2.03	0.00	80	0.015	97	98	33.0	0.12	0.66	15.40	112.6	186.8	182.7	73.8	186.4	184.57173	79	80	77		1.001	5.511	621
2341	381.151	385.884		0.16	0.17	1.33	1.10	0.26	90	89	77	2.04	0.00	80	0.015	97	98	32.9	0.13	0.70	15.47	112.7	186.9	182.7	73.8	186.4	182.23151	79	80	77		1.001	5.834	658
2342	381.313	386.050		0.16	0.17	1.33	1.10	0.26	90	89	77	2.05	0.00	80	0.016	93	94	32.9	-0.01	0.72	15.42	112.7	186.8	182.8	73.8	186.5	180.06404	79	80	77		1.001	6.001	677
2343	381.476	386.216		0.16	0.17	1.33	1.10	0.26	90	89	77	2.04	0.00	80	0.015	97	98	32.5	0.37	0.66	15.51	112.7	186.8	182.7	73.7	186.5	177.98561	79	79	77		1.001	5.511	622
2344	381.639	386.382		0.16	0.17	1.33	1.10	0.26	90	89	77	2.03	0.00	80	0.015	97	98	32.7	-0.19	0.70	15.52	112.7	186.9	182.8	73.7	186.5	175.97199	79	79	77		1.001	5.809	656
2345	381.802	386.548		0.16	0.17	1.33	1.10	0.26	90	89	77	2.04	0.00	80	0.015	97	98	32.5	0.16	0.67	15.50	112.7	186.8	182.7	73.7	186.4	174.01634	79	79	77		1.001	5.549	626
2346	381.964	386.715		0.16	0.17	1.33	1.10	0.26	90	89	77	2.05	0.00	80	0.015	96	98	32.6	-0.08	0.70	15.50	112.8	186.8	182.7	73.7	186.5	172.26692	79	79	77		1.001	5.833	658

Elapsed Time	Particulate Sampling Data																	Fuel Weight, lb		Flow, gpm		Temperature Data, oF												
	Gas Meter Cubic Feet (1)	Gas Meter Cubic Feet (2)	Gas Meter Cubic Feet (amb)	Sample Rate, cfm (1)	Sample Rate, cfm (2)	Orifice dH (1)	Orifice dH (2)	Orifice dH (amb)	Meter oF (1)	Meter oF (2)	Meter oF (amb)	Meter Vac. In. Hg. (1)	Meter Vac. In. Hg. (2)	Dilution Tunnel Temp.	Dilution Tunnel dP	Pro. Rate (%) (1)	Pro. Rate (%) (2)	Scale Reading	Weight Change	Load Side Liquid Flow Rate	Boiler Side Liquid Flow Rate (optional)	Thermopile ΔT	Boiler to Heat Exch. Temp.	Heat Exch to Boiler Temp.	Inlet Load Temp.	Outlet Load Temp.	Stack	Filter (1)	Filter (2)	Ambient		Specific Heat of Inlet Water (BTU/lb-°F)	Mass Flow Rate of Inlet Water (lb/min)	Heat Output, Btu
2347	382.127	386.880		0.16	0.17	1.34	1.10	0.26	90	89	77	2.04	0.00	80	0.015	97	97	32.5	0.16	0.64	15.44	112.7	186.8	182.6	73.7	186.4	170.48808	79	79	77		1.001	5.347	604
2348	382.289	387.046		0.16	0.17	1.34	1.10	0.26	90	89	77	2.05	0.00	80	0.016	93	94	32.5	-0.04	0.72	15.48	112.7	186.7	182.6	73.7	186.4	168.79755	79	79	77		1.001	5.997	677
2349	382.452	387.212		0.16	0.17	1.33	1.10	0.26	90	89	77	2.04	0.00	80	0.016	94	94	32.6	-0.08	0.70	15.49	112.7	186.7	182.6	73.6	186.3	167.13455	79	79	77		1.001	5.829	658
2350	382.615	387.378		0.16	0.17	1.34	1.10	0.26	90	89	77	2.04	0.00	80	0.016	94	94	32.4	0.19	0.66	15.47	112.7	186.7	182.5	73.6	186.3	165.74332	79	79	77		1.001	5.507	621
2351	382.778	387.543		0.16	0.17	1.34	1.10	0.26	90	89	77	2.04	0.00	80	0.015	97	97	32.5	-0.10	0.72	15.42	112.6	186.6	182.5	73.6	186.2	164.22443	79	79	77		1.001	5.991	675
2352	382.940	387.710		0.16	0.17	1.34	1.10	0.26	90	89	77	2.03	0.00	80	0.016	93	95	32.6	-0.12	0.68	15.49	112.6	186.6	182.4	73.6	186.2	162.75617	79	79	77		1.001	5.674	640
2353	383.103	387.875		0.16	0.17	1.33	1.10	0.26	90	89	77	2.04	0.00	80	0.014	100	100	32.4	0.19	0.68	15.33	112.5	186.5	182.3	73.6	186.1	161.2665	79	79	77		1.001	5.648	636
2354	383.266	388.041		0.16	0.17	1.34	1.11	0.26	90	89	77	2.03	0.00	79	0.015	97	97	32.4	-0.02	0.70	15.42	112.5	186.5	182.4	73.6	186.1	159.92404	79	79	77		1.001	5.860	660
2355	383.429	388.207		0.16	0.17	1.33	1.10	0.26	90	89	77	2.04	0.00	79	0.016	94	94	32.5	-0.07	0.74	15.45	112.4	186.4	182.3	73.6	186.0	158.46533	79	79	77		1.001	6.155	693
2356	383.592	388.373		0.16	0.17	1.33	1.10	0.26	90	89	77	2.03	0.00	79	0.014	100	101	32.3	0.18	0.68	15.42	112.4	186.3	182.1	73.6	186.0	157.18286	78	79	77		1.001	5.668	638
2357	383.755	388.540		0.16	0.17	1.33	1.10	0.26	90	89	77	2.04	0.00	79	0.015	97	98	32.5	-0.16	0.70	15.50	112.3	186.3	182.1	73.6	185.9	155.88896	78	79	77		1.001	5.826	655
2358	383.918	388.706		0.16	0.17	1.33	1.10	0.26	90	89	77	2.03	0.00	79	0.015	97	97	32.1	0.37	0.68	15.53	112.2	186.2	182.0	73.6	185.8	154.70744	78	79	77		1.001	5.668	637
2359	384.081	388.871		0.16	0.16	1.33	1.10	0.26	90	89	77	2.03	0.00	79	0.014	100	100	32.3	-0.12	0.74	15.47	112.2	186.1	182.0	73.6	185.8	153.40024	78	79	77		1.001	6.152	691
2360	384.244	389.037		0.16	0.17	1.32	1.10	0.26	90	89	77	2.04	0.00	79	0.014	100	101	32.5	-0.23	0.70	15.47	112.0	186.0	181.9	73.6	185.6	152.16446	78	79	77		1.001	5.828	654
2361	384.407	389.203		0.16	0.17	1.33	1.10	0.26	90	89	77	2.04	0.00	79	0.015	97	97	32.4	0.10	0.60	15.57	112.0	186.0	182.1	73.6	185.6	150.93919	78	79	77		1.001	4.979	558
2362	384.569	389.369		0.16	0.17	1.33	1.10	0.26	90	89	77	2.03	0.00	79	0.014	100	101	32.2	0.19	0.68	15.54	111.9	185.9	181.8	73.6	185.6	149.71002	78	79	77		1.001	5.693	638
2363	384.733	389.535		0.16	0.17	1.33	1.10	0.26	90	89	77	2.04	0.00	79	0.014	101	101	32.3	-0.11	0.72	15.38	111.8	185.8	181.7	73.6	185.4	148.68848	78	79	77		1.001	5.951	666
2364	384.895	389.701		0.16	0.17	1.33	1.10	0.26	90	89	77	2.04	0.00	79	0.014	100	101	32.3	-0.03	0.68	15.42	111.7	185.7	181.6	73.6	185.4	147.53853	78	79	77		1.001	5.664	634
2365	385.058	389.866		0.16	0.16	1.34	1.11	0.26	90	89	77	2.03	0.00	79	0.015	97	97	32.3	0.04	0.72	15.49	111.6	185.6	181.5	73.7	185.3	146.52879	78	78	77		1.001	5.989	669
2366	385.220	390.033		0.16	0.17	1.33	1.10	0.26	90	89	77	2.03	0.00	79	0.016	93	95	32.3	-0.05	0.68	15.50	111.5	185.5	181.5	73.7	185.2	145.5746	78	78	77		1.001	5.665	632
2367	385.383	390.198		0.16	0.16	1.34	1.10	0.26	90	89	77	2.03	0.00	79	0.014	100	100	32.5	-0.12	0.70	15.46	111.4	185.4	181.3	73.7	185.1	144.8045	78	78	77		1.001	5.822	649
2368	385.546	390.364		0.16	0.17	1.33	1.10	0.26	90	89	77	2.05	0.00	79	0.015	97	97	32.4	0.08	0.66	15.45	111.3	185.3	181.3	73.7	185.0	143.86055	78	78	77		1.001	5.500	613
2369	385.708	390.530		0.16	0.17	1.33	1.11	0.26	90	90	78	2.04	0.00	79	0.015	96	97	32.3	0.04	0.70	15.45	111.2	185.2	181.2	73.7	184.9	143.02834	78	78	78		1.001	5.830	649
2370	385.871	390.697		0.16	0.17	1.34	1.10	0.26	90	90	78	2.04	0.00	79	0.016	94	95	32.2	0.17	0.66	15.43	111.1	185.1	181.1	73.7	184.8	142.15955	78	78	78		1.001	5.475	609
2371	386.034	390.862		0.16	0.17	1.33	1.10	0.26	91	90	78	2.05	0.00	79	0.016	94	94	32.2	-0.07	0.62	15.56	110.9	185.0	180.9	73.7	184.6	141.25424	78	78	78		1.001	5.179	575
2372	386.197	391.028		0.16	0.17	1.33	1.10	0.26	91	90	78	2.03	0.00	79	0.016	94	94	32.3	-0.06	0.62	15.40	110.8	184.9	180.8	73.8	184.5	140.80307	78	78	78		1.001	5.177	574
2373	386.360	391.194		0.16	0.17	1.34	1.10	0.26	91	90	78	2.04	0.00	79	0.016	94	94	32.3	-0.02	0.68	15.49	110.7	184.8	180.9	73.8	184.5	139.9594	78	78	78		1.001	5.661	627
2374	386.522	391.359		0.16	0.16	1.33	1.10	0.26	91	90	78	2.05	0.00	79	0.015	96	97	32.4	-0.03	0.66	15.53	110.5	184.7	180.9	73.8	184.3	139.04598	78	78	78		1.001	5.501	609
2375	386.685	391.525		0.16	0.17	1.33	1.10	0.26	91	90	78	2.04	0.00	79	0.015	97	97	32.5	-0.15	0.62	15.52	110.4	184.6	180.6	73.8	184.2	138.73305	78	78	78		1.001	5.177	572
2376	386.848	391.691		0.16	0.17	1.33	1.10	0.26	91	90	78	2.03	0.00	79	0.015	97	97	32.3	0.21	0.68	15.49	110.4	184.5	180.5	73.8	184.2	138.3945	78	78	78		1.001	5.660	625
2377	387.011	391.857		0.16	0.17	1.32	1.10	0.26	91	90	78	2.05	0.00	79	0.016	94	94	32.3	0.01	0.68	15.44	110.2	184.4	180.4	73.8	184.0	137.09175	78	78	78		1.001	5.662	625
2378	387.174	392.023		0.16	0.17	1.33	1.10	0.26	91	90	78	2.03	0.00	79	0.016	94	94	32.3	0.02	0.70	15.52	110.1	184.2	180.3	73.8	183.9	136.5687	78	78	78		1.001	5.827	642
2379	387.337	392.189		0.16	0.17	1.33	1.10	0.26	91	90	78	2.05	0.00	79	0.015	97	97	32.5	-0.21	0.74	15.51	110.0	184.1	180.1	73.8	183.8	136.06268	78	78	78		1.001	6.145	677
2380	387.499	392.355		0.16	0.17	1.33	1.11	0.26	91	90	78	2.05	0.00	79	0.016	93	94	32.4	0.08	0.68	15.46	109.9	184.0	180.0	73.8	183.7	135.66998	78	78	78		1.001	5.668	623
2381	387.662	392.521		0.16	0.17	1.33	1.10	0.26	91	90	78	2.05	0.00	79	0.013	104	105	32.5	-0.08	0.72	15.46	109.8	183.9	179.9	73.8	183.6	135.11237	78	78	78		1.001	5.998	659
2382	387.825	392.687		0.16	0.17	1.33	1.10	0.26	91	90	78	2.04	0.00	79	0.014	100	101	32.4	0.06	0.68	15.50	109.6	183.8	179.8	73.8	183.4	134.50801	78	78	78		1.001	5.665	622
2383	387.988	392.853		0.16	0.17	1.33	1.10	0.26	91	90	78	2.04	0.00	79	0.016	94	94	32.3	0.15	0.66	15.54	109.5	183.6	179.7	73.8	183.3	133.87021	78	78	78		1.001	5.502	603
2384	388.150	393.019		0.16	0.17	1.32	1.10	0.26	91	90	78	2.03	0.00	79	0.016	93	94	32.5	-0.20	0.64	15.44	109.3	183.5	179.8	73.9	183.2	133.8535	78	78	78		1.001	5.342	585
2385	388.312	393.184		0.16	0.17	1.33	1.10	0.26	91	90	78	2.03	0.00	79	0.014	100	100	32.1	0.33	0.58	15.57	109.2	183.4	179.7	73.9	183.1	133.1545	78	78	78		1.001	4.856	531
2386	388.475	393.350		0.16	0.17	1.33	1.10	0.26	91	90	78	2.04	0.00	79	0.015	97	97	32.4	-0.30	0.62	15.43	109.1	183.2	179.6	73.9	183.0	132.93289	78	78	78		1.001	5.183	566
2387	388.638	393.516		0.16	0.17	1.34	1.10	0.26	91	90	78	2.05	0.00	79	0.014	100	101	32.3	0.12	0.64	15.48	109.0	183.1	179.5	73.9	182.9	132.01782	78	78	78		1.001	5.345	584
2388	388.801	393.682		0.16	0.17	1.34	1.10	0.26	91	90	78	2.04	0.00	78	0.014	100	101	32.3	0.03	0.62	15.35	109.0	183.0	179.3	73.8	182.8	131.66078	78	78	78		1.001	5.186	566
2389	388.963	393.847		0.16	0.16	1.33	1.10	0.26	91	90	78	2.04	0.00	79	0.015	96	97	32.5	-0.24	0.62	15.47	108.8	182.9	179.2	73.8	182.6	131.25592	78	78	78		1.001	5.182	564
2390	389.126	394.013		0.16	0.17	1.33	1.11	0.26	91	90	77	2.04	0.00	78	0.014	100	101	32.4	0.13	0.62	15.55	108.7	182.8	179.1	73.8	182.5	130.61632	78	78	77		1.001	5.179	564
2391	389.289	394.180		0.16	0.17	1.33	1.10	0.26	91	90	78	2.03	0.00	79	0.014	100	101	32.3	0.06	0.66	15.53	108.6	182.7	179.0	73.8	182.4	130.6747	78	78	78		1.001	5.504	598
2392	389.452	394.345		0.16	0.17	1.33	1.10	0.26	91	90	78	2.04	0.00	78	0.013	104	104	32.5	-0.15	0.62	15.51	108.5	182.5	178.9	73.8	182.3	130.39375	78	78	78		1.001	5.179	563
2393	389.615	394.512		0.16	0.17	1.33	1.10	0.26	91	90	78	2.05	0.00	80	0.016	94	95	32.3	0.13	0.62	15.53	108.4	182.4	178.8	73.8	182.2	146.56706	78	78	78		1.001	5.176	562
2394	389.777	394.678		0.16	0.17	1.33	1.10	0.26	91	90	78	2.05	0.00	85	0.015	97	98	32.0	0.30	0.62	15.47	108.3	182.3	178.7	73.8	182.1	157.39294	79	79	78		1.001	5.183	562
2395	389.940	394.844		0.16	0.17	1.33	1.11	0.26	91	90	77	2.03	0.00	80	0.013	104	105	32.2	-0.20	0.72	15.49	108.2	182.1	178.6	73.7	181.9	150.52148	78	78	77		1.001	5.993	649
2396	390.104	395.010		0.16	0.17	1.33	1.11	0.26	91	90	77	2.01	0.00	79	0.017	91	91	32.2	0.03	0.64	15.51	108.0	182.0	178.4	73.8	181.8	145.92432	78	78	77		1.001	5.340	577
2397	390.267	395.177		0.16	0.17	1.33	1.11	0.26	91	90	78	2.01	0.00	79	0.015	97	98	32.1	0.15	0.68	15.42	108.0	182.0	178.3	73.8	181.7	142.48642	78	78	78		1.001	5.675	613
2398	390.430	395.343		0.16	0.17	1.33	1.11	0.26	91	90	78	2.03	0.00	79	0.015	97	97	32.0	0.11	0.68	15.45	107.9	181.9	178.2	73.8	181.7	139.70726	78	78	78		1.001	5.664	612
2399	390.593	395.510		0.16	0.17	1.34	1.11	0.26	91	90	78	2.02	0.00	79	0.014	100	101	32.0	-0.02	0.63	15.43	107.7	181.8	178.1	73.8	181.5	137.48373	78	78	78		1.001	5.251	566
2400	390.756	395.676		0.16	0.17	1.33	1.11	0.26	91	90	78	2.03	0.00	79	0.016	94	94	32.1	-0.12	0.60	15.41	107.6	181.7	178.0	73.8	181.4	135.78331	78	78	78		1.001	5.013	540
2401	390.919	395.843		0.16	0.17	1.33	1.11	0.26	91	90	78	2.03	0.00	79	0.015	97	98	32.2	-0.05	0.60	15.45	107.4	181.5	177.8	73.8	181.3	134.06455	78	78	78		1.001	5.015	539
2402	391.082	396.010		0.16	0.17	1.34	1.11	0.26	91	90	78	2.02	0.00	79	0.016	94	95	32.1	0.10	0.64	15.50	107.3	181.4	177.7	73.9	181.1	132.70456	78	78	78		1.001	5.343	574
2403	391.244	396.176		0.16	0.17	1.34	1.11	0.26	91	90	78	2.03	0.00	79	0.015	96	97	32.0	0.03	0.62	15.46	107.1	181.3	177.6	73.9	181.0	131.76921	78	78	78		1.001	5.176	555
2404	391.407	396.343		0.16	0.17	1.34	1.11	0.26	91	90	78	2.03	0.00	79	0.015	97	98	32.0	0.08	0.64	15.43	107.0	181.2	177.6	73.9	180.9	130.6624	78	78	78		1.001	5.341	572
2405	391.571	396.509		0.16	0.17	1.34	1.11	0.26	91	90	78	2.01	0.00	79	0.014	101	101	32.0	-0.05	0.62	15.46	106.8	181.0	177.3	73.9	180.7	129.5661	78	78	78		1.001	5.178	554
2406	391.734	396.676		0.16	0.17	1.34	1.11	0.26	91	90	78	2.02	0.00	79	0.015	97	98	32.2	-0.15	0.62	15.52	106.7	180.8	177.2	73.9	180.6	128.77538	78	78	78		1.001	5.196	555
2407	391.897	396.843		0.16	0.17	1.34	1.11	0.26	91	90	78	2.03	0.00	79	0.015	97	98	32.0	0.19	0.61	15.51	106.5	180.7	177.1	73.9	180.5	128.74143	78	78	78		1.001	5.054	539
2408	392.060	397.010		0.16	0.17	1.33	1.11	0.26	91	90	78	2.02	0.00	79	0.013	104	105	32.0	-0.04	0.64	15.38	106.4	180.7	177.1	74.0	180.4	127.97929	78	78	78		1.001	5.314	566

Elapsed Time	Particulate Sampling Data																	Fuel Weight, lb		Flow, gpm		Temperature Data, oF												
	Gas Meter Cubic Feet (1)	Gas Meter Cubic Feet (2)	Gas Meter Cubic Feet (amb)	Sample Rate, cfm (1)	Sample Rate, cfm (2)	Orifice dH (1)	Orifice dH (2)	Orifice dH (amb)	Meter oF (1)	Meter oF (2)	Meter oF (amb)	Meter Vac. In. Hg. (1)	Meter Vac. In. Hg. (2)	Dilution Tunnel Temp.	Dilution Tunnel dP	Pro. Rate (%) (1)	Pro. Rate (%) (2)	Scale Reading	Weight Change	Load Side Liquid Flow Rate	Boiler Side Liquid Flow Rate (optional)	Thermopile ΔT	Boiler to Heat Exch. Temp.	Heat Exch to Boiler Temp.	Inlet Load Temp.	Outlet Load Temp.	Stack	Filter (1)	Filter (2)	Ambient		Specific Heat of Inlet Water (BTU/lb-°F)	Mass Flow Rate of Inlet Water (lb/min)	Heat Output, Btu
2409	392.223	397.177		0.16	0.17	1.33	1.11	0.26	91	90	78	2.02	0.00	78	0.013	104	105	32.0	0.02	0.62	15.45	106.3	180.5	176.9	74.0	180.3	127.18977	78	78	78		1.001	5.179	551
2410	392.386	397.343		0.16	0.17	1.34	1.11	0.26	91	90	78	2.01	0.00	79	0.015	97	97	32.0	0.01	0.62	15.54	106.1	180.4	176.7	74.0	180.1	126.21957	78	78	78		1.001	5.183	550
2411	392.550	397.510		0.16	0.17	1.33	1.11	0.26	91	90	78	2.01	0.00	78	0.015	97	98	32.1	-0.11	0.62	15.42	106.0	180.2	176.6	74.0	180.0	125.58768	78	78	78		1.001	5.183	550
2412	392.713	397.677		0.16	0.17	1.33	1.11	0.26	91	90	78	2.02	0.00	78	0.016	94	95	32.2	-0.07	0.72	15.52	105.8	180.2	176.5	74.0	179.8	124.73206	78	78	78		1.001	5.992	635
2413	392.876	397.844		0.16	0.17	1.34	1.11	0.26	91	90	78	2.03	0.00	78	0.014	100	101	32.3	-0.11	0.60	15.43	105.7	180.0	176.3	74.0	179.7	124.42485	78	78	78		1.001	5.017	531
2414	393.039	398.011		0.16	0.17	1.34	1.11	0.26	91	90	78	2.03	0.00	78	0.016	94	95	32.2	0.10	0.62	15.48	105.6	179.9	176.2	74.0	179.6	123.79128	78	78	78		1.001	5.177	547
2415	393.203	398.178		0.16	0.17	1.34	1.11	0.26	91	90	78	2.02	0.00	78	0.014	101	101	32.2	-0.07	0.61	15.42	105.4	179.7	176.1	74.0	179.4	123.68991	78	78	78		1.001	5.050	533
2416	393.366	398.345		0.16	0.17	1.33	1.11	0.26	91	90	78	2.02	0.00	79	0.015	97	98	32.0	0.20	0.64	15.38	105.3	179.6	176.0	74.0	179.3	123.82349	78	78	78		1.001	5.339	563
2417	393.528	398.511		0.16	0.17	1.34	1.11	0.26	91	90	78	2.03	0.00	79	0.014	100	101	32.2	-0.16	0.66	15.43	105.1	179.4	175.8	74.1	179.2	123.16653	78	78	78		1.001	5.466	575
2418	393.691	398.678		0.16	0.17	1.34	1.11	0.26	91	90	78	2.02	0.00	78	0.015	97	98	32.1	0.13	0.62	15.45	104.9	179.3	175.7	74.1	179.0	122.50156	78	78	78		1.001	5.178	544
2419	393.854	398.845		0.16	0.17	1.34	1.11	0.26	91	90	78	2.03	0.00	78	0.014	100	101	32.1	-0.07	0.64	15.54	104.8	179.2	175.6	74.1	178.9	121.77293	78	78	78		1.001	5.341	560
2420	394.017	399.011		0.16	0.17	1.34	1.11	0.26	91	90	78	2.02	0.00	79	0.016	94	94	32.2	-0.06	0.68	15.50	104.7	179.1	175.5	74.1	178.8	121.53635	78	78	78		1.001	5.664	594
2421	394.180	399.178		0.16	0.17	1.34	1.11	0.26	91	90	78	2.01	0.00	79	0.013	104	105	32.2	-0.02	0.56	15.50	104.6	179.0	175.4	74.1	178.6	121.43652	78	78	78		1.001	4.694	491
2422	394.344	399.344		0.16	0.17	1.34	1.11	0.26	91	90	78	2.02	0.00	79	0.016	94	94	32.1	0.07	0.64	15.44	104.4	178.8	175.3	74.1	178.5	121.55962	78	78	78		1.001	5.337	558
2423	394.507	399.511		0.16	0.17	1.33	1.11	0.26	91	90	78	2.02	0.00	79	0.016	94	95	32.1	0.00	0.66	15.43	104.3	178.7	175.1	74.1	178.4	120.9265	78	78	78		1.001	5.504	575
2424	394.670	399.678		0.16	0.17	1.33	1.11	0.26	91	90	78	2.03	0.00	81	0.014	100	102	32.1	0.06	0.62	15.55	104.1	178.5	174.9	74.1	178.2	141.46925	78	78	78		1.001	5.179	540
2425	394.833	399.844		0.16	0.17	1.33	1.11	0.26	91	90	78	2.03	0.00	83	0.013	104	105	32.0	0.08	0.68	15.47	104.0	178.4	174.8	74.1	178.1	146.14043	78	79	78		1.001	5.633	587
2426	394.996	400.010		0.16	0.17	1.33	1.11	0.26	91	90	78	2.03	0.00	80	0.015	97	97	32.0	-0.01	0.64	15.48	103.9	178.3	174.7	74.1	178.0	139.95496	78	78	78		1.001	5.334	555
2427	395.160	400.177		0.16	0.17	1.33	1.11	0.26	91	90	78	2.02	0.00	79	0.014	101	101	32.0	-0.04	0.64	15.46	103.8	178.2	174.6	74.1	177.9	135.64627	78	78	78		1.001	5.337	555
2428	395.323	400.344		0.16	0.17	1.33	1.11	0.26	91	90	78	2.02	0.00	79	0.015	97	98	31.9	0.16	0.66	15.57	103.7	178.1	174.5	74.1	177.8	132.12456	78	78	78		1.001	5.500	571
2429	395.486	400.511		0.16	0.17	1.34	1.12	0.26	91	90	78	2.03	0.00	79	0.016	94	95	32.0	-0.09	0.62	15.45	103.6	178.0	174.4	74.1	177.7	129.84381	78	78	78		1.001	5.179	537
2430	395.649	400.677		0.16	0.17	1.33	1.11	0.26	91	90	78	2.02	0.00	79	0.015	97	97	31.9	0.06	0.72	15.45	103.5	177.8	174.3	74.1	177.5	128.22359	78	78	78		1.001	5.987	620
2431	395.812	400.844		0.16	0.17	1.34	1.11	0.26	91	90	78	2.03	0.00	79	0.014	100	101	32.0	-0.13	0.64	15.57	103.3	177.7	174.2	74.1	177.4	127.13577	78	78	78		1.001	5.335	552
2432	395.975	401.011		0.16	0.17	1.34	1.12	0.26	91	90	78	2.02	0.00	79	0.016	94	95	32.1	-0.04	0.64	15.60	103.2	177.5	174.0	74.1	177.3	126.26766	78	78	78		1.001	5.337	551
2433	396.138	401.178		0.16	0.17	1.34	1.11	0.26	91	90	78	2.03	0.00	79	0.014	100	101	32.1	-0.03	0.62	15.53	103.1	177.4	173.9	74.1	177.1	125.20048	78	78	78		1.001	5.177	534
2434	396.301	401.345		0.16	0.17	1.34	1.11	0.26	91	90	78	2.03	0.00	79	0.014	100	101	32.1	0.02	0.61	15.56	103.0	177.3	173.8	74.1	177.1	124.37476	78	78	78		1.001	5.043	520
2435	396.464	401.512		0.16	0.17	1.34	1.11	0.26	91	90	78	2.01	0.00	79	0.015	97	98	32.0	0.10	0.66	15.55	102.8	177.2	173.6	74.1	176.9	123.57565	78	78	78		1.001	5.504	566
2436	396.627	401.679		0.16	0.17	1.34	1.11	0.26	91	90	78	2.03	0.00	79	0.015	97	98	32.0	-0.01	0.64	15.49	102.7	177.0	173.5	74.1	176.8	123.31112	78	78	78		1.001	5.338	549
2437	396.790	401.845		0.16	0.17	1.33	1.11	0.26	91	90	78	2.03	0.00	79	0.015	97	97	32.0	0.02	0.64	15.56	102.5	176.9	173.4	74.1	176.6	123.02303	78	78	78		1.001	5.334	548
2438	396.954	402.012		0.16	0.17	1.33	1.11	0.26	91	90	78	2.03	0.00	79	0.014	101	101	32.0	-0.07	0.64	15.36	102.4	176.8	173.3	74.1	176.5	122.87198	78	78	78		1.001	5.336	547
2439	397.117	402.178		0.16	0.17	1.33	1.11	0.26	91	90	78	2.02	0.00	79	0.015	97	97	32.0	0.08	0.64	15.50	102.3	176.6	173.2	74.1	176.3	121.76288	78	78	78		1.001	5.334	546
2440	397.280	402.345		0.16	0.17	1.33	1.11	0.26	91	90	78	2.02	0.00	79	0.013	104	105	32.2	-0.21	0.68	15.48	102.1	176.5	173.0	74.1	176.2	121.60018	78	78	78		1.001	5.659	579
2441	397.443	402.512		0.16	0.17	1.33	1.11	0.26	91	90	78	2.02	0.00	79	0.016	94	95	32.0	0.16	0.72	15.46	102.0	176.4	172.9	74.1	176.1	121.16794	78	78	78		1.001	5.980	611
2442	397.607	402.678		0.16	0.17	1.33	1.11	0.26	91	90	78	2.02	0.00	79	0.014	101	101	32.0	-0.01	0.64	15.46	101.8	176.2	172.8	74.1	175.9	120.06696	78	78	78		1.001	5.280	538
2443	397.770	402.845		0.16	0.17	1.33	1.11	0.26	91	90	78	2.02	0.00	79	0.015	97	98	32.1	-0.03	0.57	15.50	101.7	176.1	172.8	74.1	175.8	119.92758	78	78	78		1.001	4.779	487
2444	397.933	403.011		0.16	0.17	1.33	1.11	0.26	91	90	78	2.03	0.00	79	0.016	94	94	32.0	0.04	0.66	15.49	101.6	175.9	172.5	74.1	175.7	119.71513	78	78	78		1.001	5.501	560
2445	398.096	403.178		0.16	0.17	1.33	1.11	0.26	91	90	78	2.01	0.00	79	0.014	100	101	31.9	0.13	0.62	15.51	101.5	175.8	172.6	74.1	175.6	118.81136	78	78	78		1.001	5.180	526
2446	398.259	403.345		0.16	0.17	1.33	1.11	0.26	91	90	78	2.03	0.00	78	0.014	100	101	32.0	-0.09	0.64	15.50	101.3	175.7	172.3	74.1	175.4	118.62624	78	78	78		1.001	5.346	542
2447	398.422	403.511		0.16	0.17	1.34	1.11	0.26	91	90	78	2.01	0.00	78	0.013	104	104	31.9	0.04	0.60	15.55	101.2	175.5	172.2	74.1	175.3	117.7693	78	78	78		1.001	5.020	509
2448	398.585	403.678		0.16	0.17	1.34	1.12	0.26	91	90	78	2.03	0.00	78	0.016	94	95	32.0	-0.03	0.66	15.51	101.0	175.4	172.0	74.1	175.1	118.40286	78	78	78		1.001	5.505	557
2449	398.748	403.845		0.16	0.17	1.34	1.11	0.26	91	90	78	2.03	0.00	78	0.014	100	101	32.0	-0.04	0.55	15.52	100.9	175.3	172.2	74.0	175.0	118.61793	78	78	78		1.001	4.545	459
2450	398.911	404.012		0.16	0.17	1.34	1.11	0.26	91	90	78	2.03	0.00	78	0.015	97	98	32.1	-0.09	0.59	15.55	100.8	175.1	171.8	74.1	174.9	117.71452	78	78	78		1.001	4.867	491
2451	399.075	404.179		0.16	0.17	1.34	1.12	0.26	91	90	78	2.02	0.00	78	0.014	101	101	32.1	-0.03	0.63	15.48	100.7	175.0	171.7	74.1	174.7	117.66904	78	78	78		1.001	5.217	526
2452	399.238	404.346		0.16	0.17	1.34	1.11	0.26	91	90	78	2.01	0.00	79	0.016	94	95	31.9	0.25	0.63	15.56	100.5	174.9	171.5	74.1	174.6	117.14227	78	78	78		1.001	5.256	529
2453	399.401	404.513		0.16	0.17	1.34	1.11	0.26	91	90	78	2.02	0.00	79	0.016	94	95	32.0	-0.10	0.62	15.56	100.4	174.7	171.4	74.1	174.4	117.23685	78	78	78		1.001	5.178	520
2454	399.565	404.680		0.16	0.17	1.33	1.11	0.26	91	90	78	2.01	0.00	79	0.015	97	98	32.1	-0.08	0.62	15.41	100.2	174.6	171.3	74.1	174.3	117.23044	78	78	78		1.001	5.179	520
2455	399.728	404.847		0.16	0.17	1.33	1.11	0.26	91	90	78	2.02	0.00	82	0.015	97	98	32.1	-0.02	0.66	15.49	100.1	174.5	171.2	74.1	174.2	135.52525	78	79	78		1.001	5.502	551
2456	399.891	405.013		0.16	0.17	1.33	1.11	0.26	91	90	78	2.01	0.00	82	0.015	97	98	32.1	-0.04	0.66	15.53	100.0	174.3	171.0	74.1	174.1	139.58	78	78	78		1.001	5.501	551
2457	400.054	405.180		0.16	0.17	1.33	1.11	0.26	91	90	78	2.02	0.00	80	0.015	97	98	32.0	0.09	0.68	15.52	99.8	174.2	170.9	74.1	173.9	133.39395	78	78	78		1.001	5.663	566
2458	400.218	405.347		0.16	0.17	1.34	1.12	0.26	91	90	78	2.03	0.00	79	0.015	97	98	31.9	0.16	0.64	15.49	99.7	174.0	170.7	74.1	173.8	129.51692	78	78	78		1.001	5.335	532
2459	400.381	405.513		0.16	0.17	1.34	1.11	0.26	91	90	78	2.02	0.00	79	0.016	94	94	32.1	-0.20	0.64	15.51	99.5	173.9	170.6	74.1	173.6	126.57378	78	78	78		1.001	5.336	532
2460	400.544	405.680		0.16	0.17	1.34	1.11	0.26	91	90	78	2.01	0.00	79	0.015	97	98	31.9	0.17	0.65	15.57	99.4	173.8	170.5	74.1	173.5	124.55731	78	79	78		1.001	5.434	541
2461	400.707	405.847		0.16	0.17	1.33	1.11	0.26	91	90	78	2.03	0.00	79	0.014	100	101	32.0	-0.10	0.64	15.49	99.3	173.6	170.3	74.1	173.4	122.97279	78	79	78		1.001	5.338	531
2462	400.870	406.014		0.16	0.17	1.34	1.11	0.26	91	90	78	2.01	0.00	79	0.015	97	98	31.9	0.09	0.58	15.55	99.2	173.5	170.2	74.1	173.2	122.08149	78	79	78		1.001	4.850	482
2463	401.033	406.180		0.16	0.17	1.34	1.11	0.26	91	90	78	2.01	0.00	79	0.014	100	101	31.9	0.05	0.66	15.45	99.0	173.4	170.2	74.0	173.1	121.05289	78	78	78		1.001	5.504	546
2464	401.196	406.347		0.16	0.17	1.34	1.11	0.26	91	90	78	2.02	0.00	79	0.017	91	92	31.9	-0.02	0.66	15.52	99.0	173.3	170.0	74.0	173.0	120.59715	78	78	78		1.001	5.504	546
2465	401.359	406.513		0.16	0.17	1.34	1.11	0.26	91	90	78	2.01	0.00	79	0.015	97	97	32.0	-0.07	0.58	15.47	99.0	173.1	169.8	73.9	172.9	120.23653	78	78	78		1.001	4.849	481
2466	401.523	406.680		0.16	0.17	1.33	1.11	0.26	91	90	78	2.02	0.00	79	0.015	97	98	32.0	-0.06	0.62	15.42	98.9	173.0	169.7	73.8	172.7	119.08391	78	79	78		1.001	5.174	513
2467	401.686	406.847		0.16	0.17	1.33	1.11	0.26	91	90	78	2.02	0.00	79	0.014	100	101	32.0	0.02	0.66	15.39	98.9	172.8	169.6	73.7	172.6	118.77006	79	79	78		1.001	5.497	544
2468	401.849	407.013		0.16	0.17	1.33	1.11	0.26	91	90	78	2.03	0.00	79	0.014	100	101	31.9	0.05	0.59	15.51	98.9	172.7	169.5	73.6	172.5	118.24527	79	79	78		1.001	4.895	484
2469	402.013	407.180		0.16	0.17	1.33	1.11	0.26	91	90	78	2.02	0.00	79	0.014	101	101	32.0	-0.08	0.66	15.56	98.8	172.6	169.3	73.6	172.4	117.5209	79	79	78		1.001	5.496	544
2470	402.176	407.347		0.16	0.17	1.32	1.11	0.26	91	90	79	2.02	0.00	79	0.014	100	101	32.1	-0.07	0.64	15.45	98.6	172.4	169.1	73.6	172.2	117.51508	79	79	79		1.001	5.334	527

Elapsed Time	Particulate Sampling Data																	Fuel Weight, lb		Flow, gpm		Temperature Data, oF												
	Gas Meter Cubic Feet (1)	Gas Meter Cubic Feet (2)	Gas Meter Cubic Feet (amb)	Sample Rate, cfm (1)	Sample Rate, cfm (2)	Orifice dH (1)	Orifice dH (2)	Orifice dH (amb)	Meter oF (1)	Meter oF (2)	Meter oF (amb)	Meter Vac. In. Hg. (1)	Meter Vac. In. Hg. (2)	Dilution Tunnel Temp.	Dilution Tunnel dP	Pro. Rate (%) (1)	Pro. Rate (%) (2)	Scale Reading	Weight Change	Load Side Liquid Flow Rate	Boiler Side Liquid Flow Rate (optional)	Thermopile ΔT	Boiler to Heat Exch. Temp.	Heat Exch to Boiler Temp.	Inlet Load Temp.	Outlet Load Temp.	Stack	Filter (1)	Filter (2)	Ambient		Specific Heat of Inlet Water (BTU/lb-°F)	Mass Flow Rate of Inlet Water (lb/min)	Heat Output, Btu
2471	402.339	407.513		0.16	0.17	1.33	1.11	0.26	91	90	79	2.02	0.00	79	0.014	100	101	32.0	0.11	0.58	15.51	98.5	172.3	169.1	73.5	172.0	117.45303	79	79	79		1.001	4.847	478
2472	402.502	407.680		0.16	0.17	1.34	1.11	0.26	91	90	79	2.01	0.00	79	0.016	94	95	32.0	-0.03	0.62	15.49	98.4	172.2	169.0	73.5	171.9	117.54982	79	79	79		1.001	5.172	509
2473	402.666	407.846		0.16	0.17	1.33	1.11	0.26	91	90	79	2.03	0.00	79	0.015	97	97	32.0	-0.03	0.64	15.43	98.2	172.0	168.7	73.6	171.8	116.7448	79	79	79		1.001	5.336	525
2474	402.829	408.013		0.16	0.17	1.33	1.11	0.26	91	90	79	2.01	0.00	79	0.016	94	95	31.9	0.15	0.62	15.43	98.1	171.9	168.6	73.6	171.7	116.20187	79	79	79		1.001	5.173	508
2475	402.991	408.180		0.16	0.17	1.34	1.11	0.26	91	90	79	2.03	0.00	79	0.015	96	98	32.0	-0.11	0.66	15.54	97.9	171.8	168.5	73.7	171.6	115.58989	79	79	79		1.001	5.499	539
2476	403.154	408.347		0.16	0.17	1.34	1.11	0.26	91	90	79	2.02	0.00	79	0.013	104	105	32.0	-0.03	0.68	15.44	97.7	171.6	168.3	73.7	171.4	114.71021	79	79	79		1.001	5.655	553
2477	403.317	408.514		0.16	0.17	1.34	1.11	0.26	91	90	79	2.01	0.00	79	0.014	100	101	32.0	0.03	0.66	15.48	97.5	171.5	168.2	73.8	171.3	115.12666	79	79	79		1.001	5.496	537
2478	403.480	408.681		0.16	0.17	1.34	1.11	0.26	91	90	79	2.02	0.00	79	0.015	97	98	31.9	0.09	0.64	15.52	97.3	171.3	168.1	73.8	171.1	115.53304	79	79	79		1.001	5.338	520
2479	403.643	408.847		0.16	0.17	1.34	1.11	0.26	91	90	79	2.01	0.00	79	0.017	91	91	31.9	0.01	0.66	15.56	97.2	171.2	167.9	73.8	171.0	115.04282	79	79	79		1.001	5.490	534
2480	403.807	409.014		0.16	0.17	1.34	1.11	0.26	91	90	79	2.01	0.00	79	0.015	97	98	32.0	-0.16	0.64	15.47	97.0	171.1	167.8	73.9	170.9	114.65337	79	79	79		1.001	5.337	518
2481	403.970	409.180		0.16	0.17	1.33	1.11	0.26	91	90	79	2.03	0.00	79	0.014	100	101	31.9	0.14	0.64	15.45	96.8	170.9	167.8	73.9	170.7	114.1266	79	79	79		1.001	5.337	517
2482	404.133	409.347		0.16	0.17	1.33	1.11	0.26	91	90	79	2.02	0.00	79	0.014	100	101	32.1	-0.19	0.62	15.44	96.6	170.8	167.6	74.0	170.6	113.84255	79	79	79		1.001	5.174	501
2483	404.296	409.513		0.16	0.17	1.33	1.11	0.26	91	90	79	2.01	0.00	79	0.014	100	101	32.0	0.15	0.64	15.45	96.4	170.7	167.4	74.0	170.5	114.1515	79	79	79		1.001	5.335	515
2484	404.460	409.679		0.16	0.17	1.33	1.11	0.26	91	90	79	2.03	0.00	79	0.016	94	94	31.9	0.05	0.70	15.39	96.3	170.6	167.3	74.0	170.3	113.6845	79	79	79		1.001	5.821	561
2485	404.623	409.846		0.16	0.17	1.33	1.11	0.26	91	90	79	2.02	0.00	79	0.013	104	105	31.8	0.05	0.64	15.54	96.1	170.4	167.1	74.0	170.1	114.2639	79	79	79		1.001	5.336	513
2486	404.786	410.013		0.16	0.17	1.33	1.11	0.26	91	91	79	2.03	0.00	83	0.015	97	98	32.0	-0.18	0.68	15.48	96.0	170.3	167.1	74.1	170.1	132.27544	79	79	79		1.001	5.650	543
2487	404.949	410.179		0.16	0.17	1.33	1.11	0.26	91	90	79	2.03	0.00	82	0.017	91	92	32.0	-0.01	0.62	15.47	95.8	170.1	166.9	74.1	169.9	134.6057	79	79	79		1.001	5.138	493
2488	405.112	410.346		0.16	0.17	1.33	1.11	0.26	91	90	79	2.01	0.00	80	0.014	100	101	32.0	0.05	0.70	15.53	95.6	170.0	166.7	74.1	169.7	128.54694	79	79	79		1.001	5.821	557
2489	405.275	410.512		0.16	0.17	1.33	1.11	0.26	91	91	79	2.03	0.00	80	0.016	94	94	31.8	0.18	0.62	15.51	95.6	169.8	166.6	74.0	169.6	124.91254	79	79	79		1.001	5.173	495
2490	405.437	410.679		0.16	0.17	1.34	1.11	0.26	91	91	79	2.03	0.00	80	0.014	100	101	31.9	-0.11	0.64	15.44	95.5	169.7	166.4	73.9	169.4	122.83855	79	79	79		1.001	5.333	510
2491	405.600	410.845		0.16	0.17	1.34	1.11	0.26	91	91	79	2.02	0.00	80	0.018	88	89	31.9	0.00	0.64	15.44	95.5	169.6	166.4	73.9	169.4	121.30014	79	79	79		1.001	5.336	510
2492	405.764	411.012		0.16	0.17	1.33	1.11	0.26	91	91	79	2.03	0.00	80	0.015	97	98	32.1	-0.14	0.60	15.43	95.4	169.5	166.3	73.8	169.2	119.96654	79	79	79		1.001	5.007	478
2493	405.927	411.178		0.16	0.17	1.33	1.11	0.26	91	91	79	2.02	0.00	80	0.015	97	97	31.9	0.13	0.60	15.54	95.2	169.3	166.1	73.8	169.0	119.12103	79	79	79		1.001	5.010	478
2494	406.090	411.345		0.16	0.17	1.34	1.11	0.26	91	91	79	2.01	0.00	80	0.015	97	98	31.9	0.02	0.62	15.55	95.2	169.2	166.1	73.8	168.9	118.83334	79	79	79		1.001	5.175	493
2495	406.253	411.512		0.16	0.17	1.33	1.11	0.26	91	91	79	2.03	0.00	80	0.015	97	98	31.8	0.07	0.64	15.53	95.1	169.1	165.8	73.7	168.8	118.13959	79	79	79		1.001	5.335	508
2496	406.416	411.679		0.16	0.17	1.33	1.11	0.26	92	91	79	2.03	0.00	80	0.015	97	98	32.0	-0.11	0.65	15.47	94.9	168.9	165.7	73.7	168.7	117.29095	79	79	79		1.001	5.424	516
2497	406.579	411.846		0.16	0.17	1.33	1.11	0.26	92	91	79	2.03	0.00	80	0.016	94	95	31.9	0.02	0.61	15.54	94.9	168.8	165.6	73.7	168.6	116.36827	79	79	79		1.001	5.043	479
2498	406.743	412.012		0.16	0.17	1.33	1.11	0.26	92	91	79	2.02	0.00	80	0.015	97	97	31.8	0.13	0.62	15.52	94.8	168.7	165.5	73.7	168.4	116.24101	79	79	79		1.001	5.172	491
2499	406.906	412.179		0.16	0.17	1.33	1.11	0.26	92	91	79	2.02	0.00	80	0.016	94	95	32.0	-0.15	0.64	15.56	94.6	168.6	165.4	73.7	168.3	115.76312	79	79	79		1.001	5.336	506
2500	407.069	412.345		0.16	0.17	1.33	1.10	0.26	92	91	79	2.01	0.00	80	0.016	94	94	32.0	-0.02	0.70	15.52	94.5	168.4	165.2	73.7	168.2	115.37017	79	79	79		1.001	5.822	551
2501	407.232	412.512		0.16	0.17	1.33	1.11	0.26	92	91	79	2.03	0.00	80	0.015	97	98	31.9	0.10	0.68	15.54	94.4	168.3	165.1	73.7	168.1	115.22343	79	79	79		1.001	5.657	534
2502	407.396	412.678		0.16	0.17	1.34	1.11	0.26	92	91	79	2.03	0.00	80	0.016	94	94	31.9	-0.04	0.62	15.50	94.2	168.2	165.0	73.7	167.9	114.46733	79	79	79		1.001	5.171	488
2503	407.559	412.845		0.16	0.17	1.33	1.11	0.26	92	91	79	2.01	0.00	80	0.015	97	98	31.9	0.04	0.62	15.51	94.1	168.0	164.8	73.7	167.8	114.44315	79	80	79		1.001	5.169	487
2504	407.722	413.011		0.16	0.17	1.34	1.11	0.26	92	91	79	2.03	0.00	80	0.014	100	101	31.9	-0.03	0.66	15.39	93.9	167.9	164.7	73.8	167.7	113.96904	79	80	79		1.001	5.492	516
2505	407.884	413.178		0.16	0.17	1.33	1.11	0.26	92	91	79	2.03	0.00	80	0.016	93	95	32.0	-0.06	0.66	15.44	93.8	167.8	164.6	73.8	167.6	114.04302	80	80	79		1.001	5.496	516
2506	408.047	413.345		0.16	0.17	1.33	1.11	0.26	92	91	79	2.01	0.00	80	0.015	97	98	32.0	-0.02	0.64	15.46	93.6	167.6	164.5	73.8	167.4	113.52454	80	80	79		1.001	5.330	499
2507	408.211	413.511		0.16	0.17	1.34	1.11	0.26	92	91	79	2.02	0.00	80	0.016	94	94	31.9	0.03	0.62	15.54	93.4	167.5	164.4	73.8	167.3	113.38123	80	80	79		1.001	5.168	483
2508	408.374	413.678		0.16	0.17	1.33	1.11	0.26	92	91	79	2.02	0.00	80	0.014	100	101	32.0	-0.03	0.68	15.47	93.2	167.4	164.2	73.8	167.1	113.60703	80	80	79		1.001	5.655	528
2509	408.537	413.845		0.16	0.17	1.34	1.11	0.26	92	91	79	2.02	0.00	80	0.016	94	95	31.8	0.17	0.62	15.56	93.1	167.2	164.1	73.9	167.0	113.41244	80	80	79		1.001	5.168	482
2510	408.700	414.012		0.16	0.17	1.33	1.11	0.26	92	91	79	2.02	0.00	80	0.015	97	98	31.8	-0.04	0.62	15.43	93.0	167.1	164.0	73.9	166.9	113.31599	80	80	79		1.001	5.169	481
2511	408.863	414.178		0.16	0.17	1.33	1.11	0.26	92	91	80	2.02	0.00	80	0.014	100	101	31.9	-0.04	0.58	15.50	92.9	166.9	163.8	73.9	166.7	113.09718	80	80	80		1.001	4.847	451
2512	409.027	414.344		0.16	0.17	1.33	1.11	0.26	92	91	79	2.01	0.00	80	0.014	101	101	32.0	-0.11	0.60	15.51	92.8	166.8	163.7	73.9	166.6	113.22969	80	80	79		1.001	5.007	465
2513	409.190	414.511		0.16	0.17	1.33	1.11	0.26	92	91	80	2.01	0.00	80	0.014	100	101	31.9	0.06	0.62	15.48	92.6	166.7	163.7	73.9	166.4	112.51283	80	80	80		1.001	5.169	479
2514	409.353	414.678		0.16	0.17	1.32	1.11	0.26	92	91	80	2.03	0.00	80	0.014	100	101	32.0	-0.07	0.62	15.48	92.5	166.6	163.5	73.9	166.4	112.56699	80	80	80		1.001	5.168	478
2515	409.517	414.845		0.16	0.17	1.33	1.11	0.26	92	91	80	2.02	0.00	80	0.016	94	95	31.8	0.23	0.64	15.54	92.3	166.4	163.3	73.9	166.2	112.30153	80	80	80		1.001	5.311	491
2516	409.680	415.012		0.16	0.17	1.33	1.11	0.26	92	91	80	2.01	0.00	80	0.015	97	98	32.0	-0.23	0.66	15.50	92.2	166.3	163.2	73.9	166.1	112.02363	80	80	80		1.001	5.494	507
2517	409.843	415.178		0.16	0.17	1.33	1.11	0.26	92	91	80	2.03	0.00	84	0.013	104	105	31.9	0.13	0.64	15.49	92.0	166.2	163.1	73.9	165.9	131.15483	80	80	80		1.001	5.334	492
2518	410.006	415.345		0.16	0.17	1.33	1.11	0.26	92	91	80	2.02	0.00	82	0.016	94	95	31.8	0.06	0.70	15.49	91.9	166.0	162.9	73.9	165.8	131.10376	80	80	80		1.001	5.819	535
2519	410.168	415.511		0.16	0.17	1.34	1.11	0.26	92	91	80	2.03	0.00	81	0.015	96	97	31.8	-0.02	0.64	15.44	91.7	165.9	162.8	73.9	165.6	125.17006	80	80	80		1.001	5.332	490
2520	410.331	415.678		0.16	0.17	1.34	1.11	0.26	92	91	80	2.02	0.00	81	0.015	97	98	31.9	-0.06	0.58	15.44	91.5	165.8	162.7	74.0	165.5	121.94775	80	80	80		1.001	4.847	444
2521	410.494	415.844		0.16	0.17	1.33	1.10	0.26	92	91	80	2.02	0.00	81	0.014	100	101	31.9	0.02	0.62	15.50	91.5	165.7	162.6	74.0	165.4	119.78532	80	80	80		1.001	5.168	473
2522	410.658	416.011		0.16	0.17	1.34	1.11	0.26	92	91	80	2.03	0.00	81	0.016	94	95	31.9	-0.07	0.64	15.55	91.3	165.5	162.7	74.0	165.3	117.76943	80	80	80		1.001	5.308	485
2523	410.820	416.177		0.16	0.17	1.33	1.11	0.26	92	91	80	2.01	0.00	80	0.017	90	91	31.7	0.24	0.65	15.55	91.1	165.4	162.5	74.0	165.1	117.45543	80	80	80		1.001	5.418	494
2524	410.984	416.344		0.16	0.17	1.33	1.11	0.26	92	91	80	2.02	0.00	80	0.016	94	95	31.8	-0.08	0.62	15.51	91.0	165.3	162.2	74.0	165.0	116.53318	80	80	80		1.001	5.183	472
2525	411.147	416.511		0.16	0.17	1.33	1.11	0.26	92	91	80	2.01	0.00	80	0.013	104	105	31.8	-0.04	0.60	15.50	90.8	165.1	162.1	74.1	164.9	115.57139	80	80	80		1.001	5.004	455
2526	411.311	416.677		0.16	0.17	1.33	1.11	0.26	92	91	80	2.01	0.00	80	0.014	101	101	31.8	0.06	0.66	15.47	90.7	165.0	161.9	74.0	164.8	114.64206	80	80	80		1.001	5.492	499
2527	411.473	416.844		0.16	0.17	1.33	1.11	0.26	92	91	80	2.02	0.00	80	0.016	93	95	31.9	-0.14	0.62	15.58	90.6	164.9	161.8	74.1	164.7	114.39957	80	80	80		1.001	5.170	469
2528	411.637	417.011		0.16	0.17	1.33	1.11	0.26	92	91	80	2.03	0.00	80	0.016	94	95	31.8	0.10	0.58	15.52	90.5	164.8	161.8	74.1	164.5	114.34576	80	80	80		1.001	4.846	439
2529	411.800	417.177		0.16	0.17	1.33	1.11	0.26	92	91	80	2.03	0.00	81	0.014	100	101	31.8	-0.05	0.64	15.62	90.3	164.6	161.6	74.1	164.4	114.09194	80	80	80		1.001	5.333	482
2530	411.963	417.344		0.16	0.17	1.33	1.11	0.26	92	91	80	2.03	0.00	81	0.013	104	105	31.8	0.05	0.60	15.51	90.1	164.5	161.6	74.1	164.2	114.33529	80	80	80		1.001	5.019	453
2531	412.127	417.510		0.16	0.17	1.33	1.11	0.26	92	91	80	2.02	0.00	81	0.016	94	94	31.7	0.10	0.60	15.47	90.0	164.4	161.4	74.2	164.1	113.62801	80	80	80		1.001	5.008	451
2532	412.290	417.677		0.16	0.17	1.33	1.11	0.26	92	92	80	2.03	0.00	81	0.015	97	98	31.9	-0.20	0.60	15.52	89.8	164.2	161.2	74.2	164.0	113.6473	80	80	80		1.001	5.025	452

Elapsed Time	Particulate Sampling Data																	Fuel Weight, lb		Flow, gpm		Temperature Data, oF												
	Gas Meter Cubic Feet (1)	Gas Meter Cubic Feet (2)	Gas Meter Cubic Feet (amb)	Sample Rate, cfm (1)	Sample Rate, cfm (2)	Orifice dH (1)	Orifice dH (2)	Orifice dH (amb)	Meter oF (1)	Meter oF (2)	Meter oF (amb)	Meter Vac. In. Hg. (1)	Meter Vac. In. Hg. (2)	Dilution Tunnel Temp.	Dilution Tunnel dP	Pro. Rate (%) (1)	Pro. Rate (%) (2)	Scale Reading	Weight Change	Load Side Liquid Flow Rate	Boiler Side Liquid Flow Rate (optional)	Thermopile ΔT	Boiler to Heat Exch. Temp.	Heat Exch to Boiler Temp.	Inlet Load Temp.	Outlet Load Temp.	Stack	Filter (1)	Filter (2)	Ambient		Specific Heat of Inlet Water (BTU/lb-°F)	Mass Flow Rate of Inlet Water (lb/min)	Heat Output, Btu
2533	412.453	417.844		0.16	0.17	1.33	1.11	0.26	92	92	80	2.02	0.00	81	0.016	94	95	31.8	0.14	0.58	15.53	89.7	164.2	161.2	74.2	163.9	113.59581	80	80	80		1.001	4.844	435
2534	412.616	418.011		0.16	0.17	1.33	1.11	0.26	92	92	80	2.01	0.00	80	0.015	97	98	31.7	0.10	0.66	15.52	89.5	164.0	161.1	74.2	163.8	113.17992	80	80	80		1.001	5.494	493
2535	412.779	418.178		0.16	0.17	1.33	1.11	0.26	92	92	80	2.03	0.00	81	0.015	97	98	31.8	-0.18	0.62	15.43	89.3	163.8	160.6	74.3	163.5	112.98306	80	80	80		1.001	5.168	462
2536	412.942	418.345		0.16	0.17	1.33	1.11	0.26	92	92	80	2.03	0.00	81	0.015	97	98	31.8	0.07	0.64	15.45	89.2	163.7	160.7	74.3	163.5	112.55795	80	80	80		1.001	5.330	476
2537	413.105	418.511		0.16	0.17	1.33	1.11	0.26	92	92	80	2.01	0.00	81	0.014	100	101	31.7	0.02	0.66	15.47	89.1	163.6	160.3	74.3	163.4	111.88982	80	80	80		1.001	5.491	490
2538	413.268	418.678		0.16	0.17	1.33	1.11	0.26	93	92	80	2.03	0.00	81	0.015	97	98	32.0	-0.21	0.68	15.45	89.0	163.5	160.2	74.3	163.3	112.05171	80	80	80		1.001	5.655	504
2539	413.432	418.845		0.16	0.17	1.33	1.10	0.26	92	92	80	2.03	0.00	81	0.015	97	98	31.9	0.10	0.70	15.53	88.8	163.4	160.1	74.3	163.1	112.12537	80	80	80		1.001	5.825	518
2540	413.595	419.011		0.16	0.17	1.33	1.11	0.26	93	92	80	2.02	0.00	81	0.016	94	94	31.8	0.04	0.62	15.46	88.7	163.2	160.0	74.3	163.0	111.88559	80	80	80		1.001	5.167	459
2541	413.758	419.178		0.16	0.17	1.33	1.10	0.26	93	92	80	2.02	0.00	81	0.012	108	109	32.0	-0.14	0.67	15.52	88.7	163.1	159.8	74.2	162.9	111.4209	80	80	80		1.001	5.543	492
2542	413.922	419.344		0.16	0.17	1.33	1.11	0.26	93	92	80	2.02	0.00	81	0.016	94	94	31.8	0.13	0.68	15.52	88.6	162.9	159.7	74.1	162.7	111.08407	80	80	80		1.001	5.651	501
2543	414.085	419.511		0.16	0.17	1.32	1.11	0.26	93	92	80	2.03	0.00	81	0.015	97	98	31.8	0.05	0.60	15.53	88.5	162.8	159.7	74.1	162.6	110.70708	80	80	80		1.001	5.005	443
2544	414.248	419.677		0.16	0.17	1.33	1.11	0.26	93	92	80	2.03	0.00	81	0.015	97	97	31.7	0.03	0.72	15.42	88.4	162.7	159.5	74.0	162.4	110.77872	80	80	80		1.001	5.980	529
2545	414.412	419.844		0.16	0.17	1.33	1.11	0.26	93	92	80	2.03	0.00	81	0.014	101	101	31.8	-0.10	0.64	15.58	88.4	162.5	159.3	73.9	162.3	110.99292	80	80	80		1.001	5.329	472
2546	414.575	420.011		0.16	0.17	1.33	1.11	0.26	93	92	80	2.02	0.00	85	0.015	97	98	31.6	0.21	0.66	15.47	88.3	162.4	159.2	73.9	162.2	132.15268	81	81	80		1.001	5.490	486
2547	414.738	420.177		0.16	0.17	1.34	1.11	0.26	93	92	80	2.02	0.00	88	0.014	101	101	31.8	-0.15	0.68	15.49	88.3	162.3	159.1	73.8	162.1	145.44905	81	81	80		1.001	5.653	499
2548	414.900	420.344		0.16	0.17	1.33	1.11	0.26	93	92	80	2.03	0.00	90	0.015	97	99	31.5	0.27	0.60	15.48	88.1	162.1	158.9	73.8	161.9	152.41882	81	81	80		1.001	5.004	441
2549	415.063	420.510		0.16	0.17	1.33	1.11	0.26	93	92	80	2.02	0.00	91	0.015	98	98	31.3	0.17	0.67	15.61	88.1	162.0	158.8	73.7	161.8	160.08652	81	81	80		1.001	5.560	490
2550	415.227	420.677		0.16	0.17	1.34	1.11	0.26	93	92	80	2.02	0.00	92	0.013	105	106	31.2	0.14	0.70	15.54	88.0	162.0	158.8	73.7	161.7	165.63962	81	81	80		1.001	5.814	513
2551	415.390	420.843		0.16	0.17	1.34	1.11	0.26	93	92	80	2.03	0.00	93	0.015	98	98	31.0	0.21	0.74	15.46	87.9	161.9	158.7	73.7	161.6	170.32912	81	82	80		1.001	6.138	540
2552	415.553	421.010		0.16	0.17	1.34	1.11	0.26	93	92	80	2.02	0.00	94	0.014	101	102	30.6	0.41	0.74	15.51	87.9	161.8	158.7	73.6	161.6	176.88693	81	82	80		1.001	6.139	540
2553	415.716	421.177		0.16	0.17	1.33	1.11	0.26	93	92	80	2.02	0.00	95	0.016	95	96	30.1	0.49	0.68	15.50	87.8	161.8	158.8	73.7	161.6	186.70981	82	82	80		1.001	5.653	497
2554	415.879	421.343		0.16	0.17	1.34	1.11	0.26	93	92	80	2.04	0.00	98	0.013	105	106	29.3	0.77	0.70	15.50	87.9	161.8	158.7	73.7	161.5	199.76819	82	82	80		1.001	5.814	511
2555	416.041	421.509		0.16	0.17	1.33	1.11	0.26	93	92	80	2.04	0.00	102	0.015	98	99	28.7	0.58	0.68	15.50	88.1	162.2	159.1	73.7	161.8	214.48921	82	83	80		1.001	5.652	499
2556	416.204	421.675		0.16	0.17	1.34	1.11	0.26	93	92	80	2.03	0.00	105	0.016	96	96	28.3	0.47	0.64	15.47	88.7	162.9	159.7	73.7	162.4	225.46425	83	83	80		1.001	5.328	473
2557	416.367	421.841		0.16	0.17	1.33	1.11	0.26	93	92	80	2.04	0.00	106	0.015	99	99	27.7	0.63	0.64	15.54	89.4	163.7	160.5	73.8	163.2	232.14676	83	83	80		1.001	5.327	477
2558	416.529	422.006		0.16	0.16	1.33	1.11	0.26	93	92	80	2.04	0.00	108	0.016	95	96	27.1	0.51	0.74	15.42	90.2	164.4	161.2	73.8	164.0	238.28227	83	84	80		1.001	6.138	554
2559	416.692	422.172		0.16	0.17	1.33	1.11	0.26	93	92	80	2.05	0.00	109	0.015	99	100	26.6	0.49	0.66	15.54	91.1	165.5	162.2	73.9	165.0	242.97733	84	84	80		1.001	5.489	501
2560	416.854	422.337		0.16	0.16	1.33	1.11	0.26	93	92	80	2.04	0.00	110	0.015	99	99	25.9	0.77	0.65	15.53	92.1	166.4	163.1	73.9	165.9	247.46718	84	84	80		1.001	5.386	497
2561	417.016	422.502		0.16	0.17	1.32	1.10	0.26	93	92	81	2.06	0.00	112	0.015	99	99	25.2	0.71	0.70	15.48	92.9	167.4	164.0	73.9	166.7	252.37402	84	85	81		1.001	5.813	541
2562	417.178	422.667		0.16	0.16	1.33	1.10	0.26	93	92	80	2.05	0.00	113	0.015	99	99	24.7	0.46	0.64	15.45	94.1	168.6	165.1	73.9	168.1	256.36762	84	85	80		1.001	5.325	502
2563	417.340	422.832		0.16	0.17	1.32	1.10	0.26	93	92	80	2.05	0.00	114	0.016	96	96	23.9	0.78	0.64	15.55	94.9	169.5	166.0	74.0	168.9	260.35162	85	85	80		1.001	5.324	506
2564	417.502	422.997		0.16	0.17	1.32	1.10	0.26	93	92	81	2.05	0.00	115	0.014	102	103	23.2	0.78	0.74	15.49	96.1	170.6	167.1	74.0	170.1	263.98422	85	86	81		1.001	6.134	590
2565	417.664	423.162		0.16	0.16	1.32	1.09	0.26	93	92	80	2.07	0.00	116	0.015	99	100	22.6	0.60	0.70	15.45	97.1	171.7	168.2	74.0	171.2	267.41586	85	86	80		1.001	5.811	565
2566	417.826	423.326		0.16	0.16	1.32	1.09	0.26	93	92	80	2.08	0.00	117	0.015	99	99	21.9	0.70	0.58	15.50	98.2	172.9	169.2	74.1	172.2	270.06625	86	86	80		1.001	4.841	476
2567	417.988	423.490		0.16	0.16	1.32	1.09	0.26	93	92	80	2.07	0.00	117	0.016	96	96	21.3	0.54	0.66	15.49	99.3	174.0	170.4	74.1	173.4	272.03854	86	87	80		1.001	5.486	546
2568	418.149	423.654		0.16	0.16	1.32	1.09	0.26	93	92	81	2.08	0.00	118	0.016	96	96	20.6	0.77	0.64	15.51	100.5	175.4	171.7	74.1	174.6	273.97449	86	87	81		1.001	5.325	536
2569	418.311	423.818		0.16	0.16	1.32	1.09	0.26	93	92	81	2.07	0.00	118	0.015	99	99	19.8	0.77	0.71	15.45	101.8	176.6	172.9	74.1	175.9	275.82724	87	87	81		1.001	5.892	601
2570	418.473	423.983		0.16	0.17	1.32	1.09	0.26	93	92	81	2.08	0.00	119	0.015	99	100	19.0	0.82	0.72	15.54	103.0	177.8	174.0	74.1	177.2	277.9725	87	87	81		1.001	5.976	616
2571	418.634	424.147		0.16	0.16	1.32	1.09	0.26	93	92	81	2.08	0.00	119	0.015	99	99	18.4	0.52	0.66	15.47	104.3	179.1	175.3	74.2	178.4	280.05853	87	88	81		1.001	5.488	573
2572	418.796	424.310		0.16	0.16	1.32	1.08	0.26	93	92	81	2.08	0.00	119	0.016	96	96	17.7	0.77	0.70	15.52	105.4	180.1	176.3	74.2	179.5	280.42648	87	88	81		1.001	5.813	613
2573	418.957	424.474		0.16	0.16	1.32	1.08	0.26	93	93	81	2.07	0.00	119	0.015	99	99	17.2	0.51	0.64	15.34	106.6	181.6	177.7	74.2	180.8	281.16321	87	88	81		1.001	5.323	568
2574	419.119	424.637		0.16	0.16	1.32	1.08	0.26	93	93	81	2.07	0.00	120	0.016	96	95	16.6	0.52	0.66	15.53	107.9	182.7	178.8	74.2	182.1	283.15134	87	88	81		1.001	5.487	593
2575	419.280	424.800		0.16	0.16	1.32	1.08	0.26	93	93	81	2.07	0.00	117	0.015	99	98	16.0	0.61	0.70	15.57	109.0	183.9	179.8	74.2	183.2	282.02054	87	88	81		1.001	5.811	634
2576	419.443	424.965		0.16	0.16	1.32	1.08	0.26	93	93	81	2.07	0.00	100	0.014	102	101	15.5	0.56	0.68	15.50	110.3	185.1	181.0	74.2	184.5	257.08069	86	87	81		1.001	5.649	624
2577	419.605	425.129		0.16	0.16	1.32	1.08	0.26	93	93	80	2.06	0.00	95	0.015	97	97	15.1	0.35	0.66	15.37	110.9	185.5	181.5	74.1	185.1	241.99434	86	86	80		1.001	5.454	606
2578	419.767	425.293		0.16	0.16	1.31	1.07	0.26	93	93	81	2.05	0.00	91	0.014	100	100	15.0	0.09	0.66	15.50	111.3	185.8	181.7	74.1	185.4	233.26358	86	86	81		1.001	5.462	609
2579	419.929	425.458		0.16	0.17	1.31	1.08	0.26	93	93	81	2.07	0.00	90	0.015	97	97	15.0	0.05	0.70	15.50	111.5	186.1	182.0	74.1	185.6	225.5827	86	86	81		1.001	5.809	648
2580	420.091	425.622		0.16	0.16	1.31	1.09	0.26	94	93	81	2.06	0.00	89	0.016	93	93	14.8	0.23	0.62	15.49	111.7	186.1	182.0	74.0	185.7	218.88115	85	86	81		1.001	5.162	577
2581	420.253	425.787		0.16	0.16	1.31	1.08	0.26	94	93	81	2.06	0.00	88	0.015	96	97	14.6	0.17	0.66	15.46	111.8	186.3	182.2	74.1	185.9	213.82597	85	86	81		1.001	5.486	614
2582	420.416	425.952		0.16	0.17	1.32	1.08	0.26	94	93	81	2.06	0.00	88	0.015	97	97	14.7	-0.12	0.68	15.52	112.0	186.4	182.4	74.0	186.0	209.50621	85	86	81		1.001	5.647	633
2583	420.578	426.117		0.16	0.17	1.32	1.08	0.26	94	93	81	2.05	0.00	87	0.017	91	91	14.5	0.21	0.66	15.48	112.1	186.5	182.5	74.1	186.2	205.96036	85	85	81		1.001	5.488	616
2584	420.740	426.282		0.16	0.16	1.32	1.08	0.26	94	93	81	2.04	0.00	87	0.014	100	100	14.4	0.05	0.72	15.49	112.2	186.6	182.5	74.0	186.2	202.87853	85	85	81		1.001	5.971	671
2585	420.902	426.447		0.16	0.17	1.32	1.08	0.26	94	93	81	2.05	0.00	85	0.016	93	94	14.3	0.09	0.66	15.40	112.3	186.6	182.5	74.0	186.3	201.71147	85	85	81		1.001	5.487	617
2586	421.064	426.612		0.16	0.17	1.31	1.08	0.26	94	93	81	2.06	0.00	85	0.016	93	94	14.2	0.15	0.70	15.38	112.3	186.7	182.5	74.1	186.4	199.70009	85	85	81		1.001	5.810	653
2587	421.227	426.776		0.16	0.16	1.32	1.08	0.26	94	93	81	2.04	0.00	85	0.015	97	96	14.4	-0.16	0.68	15.49	112.2	186.7	182.5	74.1	186.3	197.50424	84	85	81		1.001	5.645	634
2588	421.389	426.941		0.16	0.16	1.32	1.08	0.26	94	93	81	2.06	0.00	85	0.014	100	100	14.4	-0.08	0.72	15.50	112.3	186.7	182.6	74.1	186.4	195.12793	84	85	81		1.001	5.954	669
2589	421.552	427.106		0.16	0.17	1.32	1.08	0.26	94	93	81	2.05	0.00	84	0.014	100	100	14.4	0.07	0.68	15.45	112.3	186.7	182.6	74.1	186.4	192.61995	84	85	81		1.001	5.650	635
2590	421.714	427.271		0.16	0.17	1.31	1.08	0.26	94	93	81	2.04	0.00	84	0.015	96	97	14.2	0.12	0.70	15.45	112.3	186.7	182.6	74.1	186.3	190.18459	84	84	81		1.001	5.810	653
2591	421.876	427.436		0.16	0.16	1.32	1.08	0.26	94	93	81	2.04	0.00	84	0.016	93	94	14.2	0.03	0.72	15.46	112.3	186.7	182.6	74.1	186.3	187.81792	84	84	81		1.001	5.972	671
2592	422.039	427.601		0.16	0.17	1.31	1.08	0.26	94	93	81	2.06	0.00	84	0.015	97	97	14.3	-0.09	0.66	15.60	112.1	186.6	182.6	74.2	186.3	185.44376	84	84	81		1.001	5.485	616
2593	422.201	427.766		0.16	0.17	1.32	1.08	0.26	94	93	81	2.05	0.00	84	0.014	99	100	14.2	0.07	0.68	15.58	112.1	186.6	182.6	74.2	186.3	183.09236	84	84	81		1.001	5.643	633
2594	422.364	427.931		0.16	0.16	1.31	1.08	0.26	94	93	81	2.06	0.00	84	0.013	104	104	14.3	-0.08	0.72	15.48	112.0	186.6	182.6	74.2	186.2	180.93596	83	84	81		1.001	5.969	669

Elapsed Time	Particulate Sampling Data																	Fuel Weight, lb		Flow, gpm		Temperature Data, oF													
	Gas Meter Cubic Feet (1)	Gas Meter Cubic Feet (2)	Gas Meter Cubic Feet (amb)	Sample Rate, cfm (1)	Sample Rate, cfm (2)	Orifice dH (1)	Orifice dH (2)	Orifice dH (amb)	Meter oF (1)	Meter oF (2)	Meter oF (amb)	Meter Vac. In. Hg. (1)	Meter Vac. In. Hg. (2)	Dilution Tunnel Temp.	Dilution Tunnel dP	Pro. Rate (%) (1)	Pro. Rate (%) (2)	Scale Reading	Weight Change	Load Side Liquid Flow Rate	Boiler Side Liquid Flow Rate (optional)	Thermopile ΔT	Boiler to Heat Exch. Temp.	Heat Exch to Boiler Temp.	Inlet Load Temp.	Outlet Load Temp.	Stack	Filter (1)	Filter (2)	Ambient		Specific Heat of Inlet Water (BTU/lb-°F)	Mass Flow Rate of Inlet Water (lb/min)	Heat Output, Btu
2595	422.526	428.095		0.16	0.16	1.31	1.08	0.26	94	93	81	2.05	0.00	84	0.014	99	99	14.2	0.10	0.62	15.47	112.0	186.6	182.5	74.2	186.2	178.85806	83	84	81		1.001	5.160	579
2596	422.689	428.260		0.16	0.16	1.31	1.08	0.26	94	93	81	2.05	0.00	84	0.015	97	97	14.1	0.08	0.71	15.46	111.9	186.5	182.5	74.3	186.2	176.84218	83	84	81		1.001	5.943	666
2597	422.851	428.425		0.16	0.17	1.31	1.08	0.26	94	93	81	2.06	0.00	84	0.015	96	97	14.1	0.03	0.68	15.46	111.8	186.5	182.4	74.3	186.1	174.96693	83	84	81		1.001	5.648	632
2598	423.014	428.589		0.16	0.16	1.31	1.08	0.26	94	93	81	2.05	0.00	84	0.014	100	99	14.1	-0.03	0.66	15.49	111.8	186.5	182.4	74.3	186.1	173.14204	83	84	81		1.001	5.486	614
2599	423.176	428.755		0.16	0.17	1.31	1.08	0.26	94	93	81	2.06	0.00	84	0.017	90	91	14.1	0.02	0.68	15.52	111.8	186.4	182.4	74.3	186.1	171.32929	83	83	81		1.001	5.649	632
2600	423.339	428.920		0.16	0.17	1.31	1.08	0.26	94	93	81	2.06	0.00	84	0.014	100	100	14.2	-0.10	0.66	15.53	111.6	186.3	182.3	74.4	186.0	169.64359	83	83	81		1.001	5.486	613
2601	423.501	429.085		0.16	0.16	1.31	1.08	0.26	94	93	81	2.06	0.00	84	0.015	96	97	14.3	-0.05	0.70	15.58	111.5	186.3	182.3	74.5	185.9	167.93268	83	83	81		1.001	5.812	649
2602	423.664	429.250		0.16	0.17	1.31	1.08	0.26	94	93	81	2.06	0.00	83	0.016	94	93	14.2	0.06	0.66	15.50	111.4	186.2	182.2	74.5	185.9	166.3187	83	83	81		1.001	5.485	612
2603	423.826	429.415		0.16	0.17	1.31	1.08	0.26	94	93	81	2.06	0.00	83	0.017	90	91	14.2	0.03	0.66	15.46	111.3	186.2	182.2	74.5	185.8	164.69153	83	83	81		1.001	5.486	611
2604	423.989	429.580		0.16	0.16	1.31	1.08	0.26	94	93	81	2.05	0.00	83	0.016	94	93	14.2	-0.03	0.70	15.40	111.3	186.1	182.1	74.5	185.8	163.14111	83	83	81		1.001	5.805	647
2605	424.151	429.745		0.16	0.17	1.32	1.08	0.26	94	93	81	2.04	0.00	83	0.014	99	100	14.1	0.06	0.66	15.54	111.1	186.0	182.1	74.6	185.7	161.63864	83	83	81		1.001	5.489	611
2606	424.314	429.909		0.16	0.16	1.31	1.08	0.26	94	93	81	2.06	0.00	83	0.016	94	93	14.1	0.01	0.72	15.51	111.0	185.9	181.9	74.6	185.6	160.18561	83	83	81		1.001	5.970	664
2607	424.476	430.075		0.16	0.17	1.31	1.08	0.26	94	93	81	2.06	0.00	83	0.015	96	97	14.3	-0.14	0.68	15.47	111.0	185.9	181.9	74.6	185.5	158.67412	83	83	81		1.001	5.646	627
2608	424.639	430.240		0.16	0.17	1.32	1.08	0.26	94	93	81	2.05	0.00	83	0.013	104	104	14.3	0.02	0.74	15.66	110.8	185.8	181.8	74.6	185.4	157.38007	83	83	81		1.001	6.131	680
2609	424.801	430.405		0.16	0.16	1.31	1.08	0.26	94	93	81	2.04	0.00	83	0.013	103	104	14.2	0.05	0.72	15.47	110.7	185.7	181.8	74.7	185.4	156.02831	83	83	81		1.001	5.969	662
2610	424.963	430.570		0.16	0.17	1.32	1.08	0.26	94	93	81	2.04	0.00	83	0.016	93	93	14.2	-0.04	0.70	15.50	110.7	185.7	181.7	74.6	185.3	154.75157	83	83	81		1.001	5.808	644
2611	425.125	430.734		0.16	0.16	1.32	1.08	0.26	94	93	81	2.05	0.00	83	0.015	96	96	14.2	0.10	0.66	15.48	110.6	185.6	181.5	74.7	185.2	153.71504	82	83	81		1.001	5.482	607
2612	425.288	430.899		0.16	0.17	1.32	1.08	0.26	94	93	81	2.06	0.00	83	0.016	94	93	14.3	-0.18	0.74	15.53	110.5	185.5	181.5	74.7	185.2	152.70689	82	83	81		1.001	6.130	678
2613	425.450	431.064		0.16	0.17	1.31	1.08	0.26	94	93	81	2.05	0.00	83	0.016	93	93	14.2	0.14	0.70	15.48	110.4	185.4	181.4	74.7	185.1	151.54086	82	83	81		1.001	5.791	640
2614	425.613	431.229		0.16	0.16	1.32	1.08	0.26	94	93	81	2.04	0.00	83	0.015	97	97	14.3	-0.08	0.70	15.42	110.3	185.3	181.5	74.7	185.0	150.59274	82	83	81		1.001	5.812	642
2615	425.775	431.394		0.16	0.17	1.32	1.09	0.26	94	93	81	2.06	0.00	83	0.014	99	100	14.2	0.03	0.66	15.39	110.2	185.2	181.2	74.7	184.9	149.54442	82	83	81		1.001	5.504	607
2616	425.938	431.560		0.16	0.17	1.32	1.08	0.26	94	93	81	2.04	0.00	83	0.016	94	94	14.2	0.02	0.64	15.47	110.0	185.1	181.1	74.7	184.8	148.59372	82	83	81		1.001	5.323	586
2617	426.100	431.725		0.16	0.17	1.32	1.09	0.26	94	93	81	2.04	0.00	83	0.014	99	100	14.2	0.07	0.72	15.50	110.0	185.0	181.1	74.7	184.7	147.9256	82	83	81		1.001	5.973	658
2618	426.263	431.890		0.16	0.16	1.31	1.08	0.26	94	93	81	2.04	0.00	83	0.013	104	104	14.2	-0.06	0.66	15.47	109.9	184.9	181.1	74.7	184.6	147.02603	82	83	81		1.001	5.487	604
2619	426.426	432.055		0.16	0.17	1.31	1.08	0.26	94	93	81	2.04	0.00	83	0.014	100	100	14.5	-0.26	0.70	15.53	109.8	184.9	181.0	74.7	184.5	146.20522	82	83	81		1.001	5.809	639
2620	426.588	432.220		0.16	0.17	1.31	1.09	0.26	94	93	81	2.06	0.00	83	0.013	103	104	14.3	0.13	0.56	15.44	109.8	184.7	181.1	74.7	184.4	145.36575	82	83	81		1.001	4.676	514
2621	426.751	432.385		0.16	0.16	1.31	1.08	0.26	94	93	81	2.05	0.00	83	0.016	94	93	14.3	0.08	0.68	15.43	109.6	184.6	180.8	74.7	184.3	144.40579	82	82	81		1.001	5.643	619
2622	426.914	432.550		0.16	0.17	1.31	1.08	0.26	94	93	81	2.04	0.00	83	0.014	100	100	14.2	0.04	0.66	15.51	109.5	184.5	180.6	74.7	184.2	143.96326	82	82	81		1.001	5.488	602
2623	427.076	432.715		0.16	0.16	1.31	1.09	0.26	94	93	81	2.06	0.00	83	0.014	99	100	14.3	-0.06	0.70	15.49	109.4	184.4	180.5	74.6	184.1	143.23703	82	82	81		1.001	5.811	637
2624	427.239	432.880		0.16	0.17	1.31	1.08	0.26	94	93	81	2.06	0.00	83	0.015	97	97	14.2	0.05	0.70	15.47	109.3	184.3	180.5	74.7	184.0	142.13222	82	82	81		1.001	5.806	636
2625	427.401	433.046		0.16	0.17	1.31	1.08	0.26	94	93	81	2.06	0.00	83	0.015	96	97	14.3	-0.09	0.70	15.59	109.3	184.2	180.4	74.6	183.9	141.6512	82	82	81		1.001	5.809	636
2626	427.564	433.210		0.16	0.16	1.31	1.09	0.26	94	93	81	2.04	0.00	83	0.015	97	96	14.4	-0.05	0.68	15.46	109.2	184.1	180.3	74.5	183.8	140.70203	82	82	81		1.001	5.646	617
2627	427.727	433.375		0.16	0.17	1.32	1.08	0.26	94	93	81	2.06	0.00	83	0.015	97	97	14.2	0.11	0.62	15.47	109.1	183.9	180.1	74.5	183.6	139.75092	82	82	81		1.001	5.159	564
2628	427.889	433.540		0.16	0.17	1.31	1.08	0.26	94	93	81	2.05	0.00	83	0.013	103	104	14.3	-0.04	0.66	15.49	109.1	183.8	179.9	74.5	183.5	139.57494	82	82	81		1.001	5.485	599
2629	428.052	433.705		0.16	0.16	1.32	1.09	0.26	94	93	81	2.06	0.00	83	0.016	94	93	14.4	-0.08	0.68	15.39	108.9	183.7	179.9	74.5	183.4	138.75224	82	82	81		1.001	5.646	616
2630	428.214	433.870		0.16	0.17	1.31	1.09	0.26	94	93	81	2.05	0.00	83	0.016	93	93	14.3	0.05	0.62	15.51	108.9	183.6	179.7	74.4	183.3	138.18895	82	82	81		1.001	5.159	562
2631	428.377	434.035		0.16	0.17	1.31	1.09	0.26	94	93	81	2.06	0.00	83	0.013	104	104	14.3	0.03	0.68	15.39	108.9	183.5	179.6	74.4	183.2	138.00302	82	82	81		1.001	5.666	617
2632	428.539	434.200		0.16	0.16	1.32	1.09	0.26	94	93	81	2.06	0.00	83	0.013	103	104	14.5	-0.22	0.70	15.46	108.7	183.4	179.5	74.3	183.0	137.3181	82	82	81		1.001	5.810	632
2633	428.702	434.366		0.16	0.17	1.32	1.08	0.26	94	93	81	2.04	0.00	83	0.015	97	97	14.5	0.02	0.72	15.43	108.6	183.2	179.4	74.3	182.9	136.41103	82	82	81		1.001	5.973	649
2634	428.864	434.531		0.16	0.17	1.32	1.09	0.26	94	93	81	2.04	0.00	83	0.014	99	100	14.4	0.06	0.62	15.45	108.5	183.1	179.3	74.3	182.8	136.24619	82	82	81		1.001	5.160	560
2635	429.026	434.696		0.16	0.17	1.32	1.08	0.26	94	93	81	2.06	0.00	83	0.015	96	97	14.5	-0.07	0.70	15.52	108.3	183.0	179.2	74.3	182.6	135.70279	82	82	81		1.001	5.808	630
2636	429.189	434.861		0.16	0.16	1.31	1.08	0.26	94	93	81	2.06	0.00	83	0.014	100	100	14.5	0.02	0.68	15.52	108.3	182.9	179.1	74.3	182.6	134.99629	82	82	81		1.001	5.648	612
2637	429.351	435.026		0.16	0.17	1.32	1.08	0.26	94	93	81	2.05	0.00	83	0.014	99	100	14.4	0.11	0.68	15.46	108.2	182.7	178.9	74.3	182.4	134.5053	82	82	81		1.001	5.646	612
2638	429.514	435.191		0.16	0.16	1.32	1.08	0.26	94	94	81	2.04	0.00	83	0.016	94	93	14.4	0.02	0.64	15.48	108.0	182.6	178.8	74.3	182.3	133.49576	82	82	81		1.001	5.322	575
2639	429.676	435.355		0.16	0.16	1.32	1.08	0.26	95	94	81	2.04	0.00	83	0.014	99	99	14.4	-0.02	0.68	15.53	107.9	182.5	178.7	74.3	182.2	132.75375	82	82	81		1.001	5.645	610
2640	429.839	435.520		0.16	0.16	1.32	1.08	0.26	94	94	81	2.05	0.00	83	0.015	97	96	14.4	-0.02	0.74	15.46	107.7	182.4	178.5	74.3	182.0	132.71689	82	82	81		1.001	6.131	661
2641	430.002	435.686		0.16	0.17	1.32	1.08	0.26	95	94	81	2.05	0.00	83	0.014	100	100	14.3	0.07	0.72	15.55	107.6	182.3	178.4	74.4	182.0	132.48817	82	82	81		1.001	5.945	640
2642	430.164	435.851		0.16	0.17	1.32	1.09	0.26	95	94	81	2.05	0.00	83	0.016	93	93	14.5	-0.15	0.66	15.46	107.4	182.1	178.3	74.4	181.8	132.00829	82	82	81		1.001	5.485	590
2643	430.327	436.016		0.16	0.17	1.31	1.08	0.26	95	94	81	2.04	0.00	83	0.014	100	100	14.3	0.14	0.70	15.47	107.2	181.9	178.1	74.4	181.6	131.68649	82	82	81		1.001	5.808	623
2644	430.489	436.181		0.16	0.16	1.31	1.08	0.26	94	94	81	2.05	0.00	82	0.014	99	100	14.5	-0.13	0.68	15.48	107.0	181.9	178.0	74.5	181.5	131.44347	82	82	81		1.001	5.644	605
2645	430.652	436.345		0.16	0.16	1.30	1.07	0.26	95	94	81	2.06	0.00	92	0.014	101	100	14.5	-0.05	0.64	15.46	107.0	181.7	177.9	74.4	181.4	158.21657	83	83	81		1.001	5.320	570
2646	430.814	436.510		0.16	0.16	1.31	1.09	0.26	95	94	81	2.03	0.00	84	0.016	93	93	14.5	0.02	0.66	15.45	106.7	181.5	177.7	74.5	181.2	151.26512	82	82	81		1.001	5.483	586
2647	430.977	436.675		0.16	0.17	1.31	1.09	0.26	95	94	81	2.04	0.00	83	0.013	104	104	14.3	0.18	0.72	15.45	106.6	181.4	177.6	74.5	181.1	145.65166	82	82	81		1.001	5.970	637
2648	431.140	436.841		0.16	0.17	1.31	1.09	0.26	95	94	81	2.04	0.00	83	0.015	96	97	14.4	-0.10	0.64	15.45	106.4	181.3	177.6	74.5	181.0	141.80077	82	82	81		1.001	5.324	567
2649	431.303	437.006		0.16	0.16	1.31	1.09	0.26	95	94	81	2.05	0.00	83	0.014	100	100	14.3	0.15	0.72	15.40	106.3	181.2	177.5	74.6	180.9	138.65231	82	82	81		1.001	5.971	636
2650	431.466	437.172		0.16	0.17	1.32	1.09	0.26	95	94	81	2.04	0.00	83	0.014	100	100	14.2	0.02	0.70	15.48	106.2	181.1	177.4	74.7	180.8	136.88167	82	82	81		1.001	5.782	615
2651	431.629	437.338		0.16	0.17	1.32	1.09	0.26	95	94	81	2.05	0.00	83	0.015	96	97	14.2	-0.01	0.67	15.52	106.1	181.0	177.3	74.6	180.7	135.21642	82	82	81		1.001	5.535	588
2652	431.792	437.503		0.16	0.16	1.32	1.09	0.26	95	94	81	2.04	0.00	83	0.015	96	96	14.3	-0.05	0.70	15.53	105.9	180.8	177.1	74.7	180.6	134.29602	82	82	81		1.001	5.808	616
2653	431.954	437.669		0.16	0.17	1.32	1.09	0.26	95	94	81	2.04	0.00	83	0.013	103	104	14.3	0.01	0.66	15.50	105.7	180.7	177.0	74.7	180.4	132.95848	82	82	81		1.001	5.486	580
2654	432.117	437.834		0.16	0.17	1.31	1.08	0.26	95	94	81	2.05	0.00	83	0.014	100	100	14.3	-0.06	0.70	15.56	105.5	180.6	176.8	74.7	180.3	132.07387	82	82	81		1.001	5.810	614
2655	432.279	437.999		0.16	0.17	1.32	1.09	0.26	95	94	81	2.04	0.00	83	0.016	93	93	14.3	0.06	0.68	15.51	105.4	180.5	176.8	74.8	180.2	131.53168	82	82	81		1.001	5.645	596
2656	432.442	438.165		0.16	0.17	1.32	1.09	0.26	95	94	81	2.03	0.00	83	0.016	93	94	14.3	-0.03	0.66	15.61	105.3	180.3	176.7	74.8	180.1	130.74904	82	82	81		1.001	5.485	578

Elapsed Time	Particulate Sampling Data																	Fuel Weight, lb		Flow, gpm		Temperature Data, oF													
	Gas Meter Cubic Feet (1)	Gas Meter Cubic Feet (2)	Gas Meter Cubic Feet (amb)	Sample Rate, cfm (1)	Sample Rate, cfm (2)	Orifice dH (1)	Orifice dH (2)	Orifice dH (amb)	Meter oF (1)	Meter oF (2)	Meter oF (amb)	Meter Vac. In. Hg. (1)	Meter Vac. In. Hg. (2)	Dilution Tunnel Temp.	Dilution Tunnel dP	Pro. Rate (%) (1)	Pro. Rate (%) (2)	Scale Reading	Weight Change	Load Side Liquid Flow Rate	Boiler Side Liquid Flow Rate (optional)	Thermopile ΔT	Boiler to Heat Exch. Temp.	Heat Exch to Boiler Temp.	Inlet Load Temp.	Outlet Load Temp.	Stack	Filter (1)	Filter (2)	Ambient		Specific Heat of Inlet Water (BTU/lb-°F)	Mass Flow Rate of Inlet Water (lb/min)	Heat Output, Btu
2657	432.605	438.330		0.16	0.16	1.32	1.09	0.26	95	94	81	2.05	0.00	83	0.014	100	100	14.4	-0.04	0.70	15.46	105.1	180.2	176.6	74.8	179.9	130.27499	82	82	81		1.001	5.808	611
2658	432.768	438.496		0.16	0.17	1.32	1.09	0.26	95	94	81	2.04	0.00	83	0.015	96	97	14.4	-0.03	0.66	15.51	104.9	180.1	176.3	74.8	179.8	129.49664	82	82	81		1.001	5.488	576
2659	432.931	438.662		0.16	0.17	1.32	1.09	0.26	95	94	81	2.03	0.00	83	0.015	96	97	14.5	-0.11	0.70	15.48	104.8	179.9	176.3	74.8	179.7	128.56661	82	82	81		1.001	5.805	609
2660	433.094	438.828		0.16	0.17	1.32	1.09	0.26	95	94	81	2.05	0.00	83	0.015	96	97	14.4	0.15	0.65	15.49	104.6	179.8	176.1	74.9	179.5	128.09891	82	82	81		1.001	5.405	566
2661	433.257	438.994		0.16	0.17	1.32	1.09	0.26	95	94	82	2.03	0.00	83	0.013	104	104	14.4	0.00	0.64	15.47	104.5	179.6	175.9	74.9	179.3	127.69371	82	82	82		1.001	5.337	558
2662	433.420	439.160		0.16	0.17	1.32	1.09	0.26	95	94	81	2.04	0.00	83	0.015	96	97	14.4	0.01	0.72	15.52	104.3	179.5	175.8	74.9	179.2	127.51727	82	82	81		1.001	5.972	624
2663	433.583	439.325		0.16	0.16	1.32	1.09	0.26	95	94	81	2.05	0.00	83	0.014	100	100	14.4	-0.01	0.66	15.53	104.2	179.3	175.6	74.9	179.1	126.85358	82	82	81		1.001	5.483	572
2664	433.746	439.491		0.16	0.17	1.31	1.09	0.26	95	94	81	2.04	0.00	83	0.015	96	97	14.3	0.06	0.68	15.49	104.0	179.2	175.5	74.9	178.9	126.70483	82	82	81		1.001	5.645	588
2665	433.909	439.656		0.16	0.17	1.31	1.09	0.26	95	94	82	2.04	0.00	83	0.015	96	96	14.4	-0.09	0.64	15.49	103.9	179.1	175.4	74.9	178.8	126.36047	82	82	82		1.001	5.321	554
2666	434.072	439.821		0.16	0.17	1.31	1.09	0.26	95	94	82	2.05	0.00	83	0.016	93	93	14.4	0.03	0.58	15.52	103.8	179.0	175.2	74.9	178.7	125.99101	82	82	82		1.001	4.835	502
2667	434.235	439.987		0.16	0.17	1.31	1.09	0.26	95	94	81	2.05	0.00	83	0.014	100	100	14.4	-0.05	0.66	15.49	103.6	178.8	175.1	74.9	178.5	125.52472	82	82	81		1.001	5.483	569
2668	434.398	440.153		0.16	0.17	1.32	1.10	0.26	95	94	81	2.05	0.00	83	0.013	104	104	14.3	0.10	0.70	15.52	103.4	178.6	174.9	74.9	178.3	124.95371	82	82	81		1.001	5.814	602
2669	434.561	440.318		0.16	0.16	1.32	1.10	0.26	95	94	81	2.05	0.00	83	0.016	93	93	14.3	0.01	0.57	15.47	103.3	178.6	174.9	74.9	178.2	124.73549	82	82	81		1.001	4.726	489
2670	434.724	440.484		0.16	0.17	1.32	1.09	0.26	95	94	82	2.04	0.00	83	0.014	100	100	14.5	-0.23	0.66	15.50	103.1	178.4	174.8	74.9	178.1	124.44468	82	82	82		1.001	5.525	571
2671	434.886	440.650		0.16	0.17	1.32	1.09	0.26	95	94	82	2.03	0.00	83	0.016	93	94	14.3	0.23	0.72	15.47	103.1	178.2	174.6	74.9	178.0	123.97974	82	82	82		1.001	5.969	616
2672	435.049	440.816		0.16	0.17	1.32	1.09	0.26	95	94	82	2.05	0.00	83	0.014	100	100	14.5	-0.17	0.66	15.55	102.9	178.1	174.4	74.9	177.8	123.71003	82	82	82		1.001	5.483	565
2673	435.211	440.982		0.16	0.17	1.32	1.09	0.26	95	94	81	2.03	0.00	83	0.013	103	104	14.4	0.09	0.64	15.43	102.7	177.9	174.5	74.9	177.7	123.11701	82	82	81		1.001	5.322	547
2674	435.374	441.147		0.16	0.16	1.32	1.09	0.26	95	94	81	2.03	0.00	83	0.014	100	100	14.5	-0.16	0.60	15.55	102.6	177.8	174.1	74.9	177.5	123.16576	82	82	81		1.001	4.999	514
2675	435.537	441.313		0.16	0.17	1.32	1.09	0.26	95	94	82	2.04	0.00	82	0.016	93	94	14.4	0.17	0.64	15.39	102.5	177.7	174.0	74.9	177.4	122.88673	82	82	82		1.001	5.322	546
2676	435.700	441.477		0.16	0.16	1.32	1.09	0.26	95	94	81	2.04	0.00	88	0.014	100	100	14.5	-0.10	0.70	15.52	102.3	177.5	173.9	74.9	177.3	148.33106	82	83	81		1.001	5.807	595
2677	435.862	441.643		0.16	0.17	1.32	1.09	0.26	95	94	81	2.04	0.00	84	0.015	96	97	14.3	0.14	0.68	15.49	102.2	177.4	173.8	74.9	177.1	141.07639	82	82	81		1.001	5.646	578
2678	436.025	441.809		0.16	0.17	1.31	1.09	0.26	95	94	81	2.05	0.00	83	0.014	100	100	14.3	0.02	0.68	15.51	102.1	177.3	173.7	74.9	177.0	136.50226	82	82	81		1.001	5.647	577
2679	436.188	441.974		0.16	0.16	1.32	1.09	0.26	95	94	81	2.03	0.00	83	0.015	96	96	14.4	-0.03	0.72	15.51	102.0	177.2	173.8	74.9	176.9	133.24094	82	82	81		1.001	5.968	609
2680	436.351	442.140		0.16	0.17	1.31	1.09	0.26	95	94	81	2.05	0.00	83	0.015	96	97	14.4	-0.01	0.68	15.56	101.8	177.0	173.4	74.9	176.7	131.10712	82	82	81		1.001	5.644	575
2681	436.514	442.306		0.16	0.17	1.32	1.09	0.26	95	94	82	2.03	0.00	83	0.015	96	97	14.4	-0.07	0.66	15.47	101.6	176.9	173.3	74.9	176.6	129.20807	82	82	82		1.001	5.482	558
2682	436.677	442.472		0.16	0.17	1.31	1.09	0.26	95	94	82	2.04	0.00	83	0.015	96	97	14.3	0.09	0.64	15.54	101.5	176.7	173.0	74.9	176.5	127.9544	82	82	82		1.001	5.322	541
2683	436.840	442.638		0.16	0.17	1.31	1.09	0.26	95	94	82	2.04	0.00	83	0.014	100	100	14.3	0.06	0.62	15.48	101.4	176.6	172.9	74.9	176.3	127.04688	82	82	82		1.001	5.158	524
2684	437.003	442.803		0.16	0.17	1.32	1.09	0.26	95	94	82	2.04	0.00	83	0.014	100	100	14.4	-0.10	0.68	15.46	101.3	176.5	172.8	74.9	176.2	126.23228	82	82	82		1.001	5.647	573
2685	437.166	442.969		0.16	0.17	1.31	1.09	0.26	95	94	82	2.04	0.00	83	0.015	96	97	14.4	-0.02	0.68	15.51	101.2	176.3	172.7	74.9	176.1	125.99376	82	82	82		1.001	5.646	572
2686	437.329	443.134		0.16	0.17	1.32	1.08	0.26	95	94	82	2.05	0.00	83	0.014	100	100	14.3	0.11	0.66	15.51	101.0	176.3	172.6	74.9	175.9	125.86633	82	82	82		1.001	5.459	552
2687	437.492	443.300		0.16	0.17	1.32	1.09	0.26	95	94	82	2.05	0.00	83	0.016	93	94	14.3	-0.01	0.66	15.58	100.8	176.0	172.5	74.9	175.8	124.57402	82	82	82		1.001	5.448	550
2688	437.655	443.465		0.16	0.16	1.31	1.09	0.26	95	94	82	2.03	0.00	83	0.014	100	100	14.4	-0.07	0.68	15.53	100.7	175.9	172.4	74.9	175.7	124.08509	82	82	82		1.001	5.645	569
2689	437.817	443.631		0.16	0.17	1.32	1.09	0.26	95	94	82	2.03	0.00	83	0.013	103	104	14.5	-0.12	0.68	15.55	100.7	175.8	172.2	74.9	175.5	123.32258	82	82	82		1.001	5.651	569
2690	437.980	443.796		0.16	0.17	1.32	1.09	0.26	95	94	82	2.03	0.00	83	0.014	100	100	14.4	0.09	0.60	15.55	100.5	175.6	172.1	74.9	175.3	122.93868	82	82	82		1.001	4.995	502
2691	438.143	443.962		0.16	0.17	1.32	1.09	0.26	95	94	82	2.03	0.00	83	0.014	100	100	14.4	0.01	0.76	15.49	100.3	175.5	172.0	74.9	175.2	122.25928	82	82	82		1.001	6.293	632
2692	438.306	444.128		0.16	0.17	1.32	1.09	0.26	95	94	82	2.04	0.00	83	0.014	100	100	14.5	-0.13	0.70	15.51	100.2	175.3	171.8	74.9	175.1	121.91742	82	82	82		1.001	5.801	582
2693	438.468	444.294		0.16	0.17	1.32	1.09	0.26	95	94	82	2.03	0.00	83	0.014	99	100	14.4	0.10	0.74	15.46	100.1	175.2	171.7	74.9	175.0	121.63717	82	82	82		1.001	6.128	614
2694	438.631	444.460		0.16	0.17	1.32	1.09	0.26	95	94	82	2.04	0.00	83	0.015	96	97	14.3	0.11	0.66	15.53	100.0	175.1	171.6	74.9	174.8	121.47195	82	82	82		1.001	5.481	549
2695	438.794	444.625		0.16	0.17	1.32	1.09	0.26	95	94	82	2.04	0.00	83	0.013	104	104	14.3	-0.04	0.68	15.54	99.9	175.0	171.4	74.8	174.7	121.78503	82	82	82		1.001	5.628	563
2696	438.957	444.791		0.16	0.17	1.32	1.09	0.26	95	94	82	2.04	0.00	83	0.014	100	100	14.4	-0.11	0.76	15.55	99.8	174.8	171.3	74.7	174.6	121.24989	82	82	82		1.001	6.354	635
2697	439.120	444.956		0.16	0.17	1.32	1.09	0.26	95	94	82	2.03	0.00	83	0.014	100	100	14.4	0.09	0.70	15.59	99.8	174.7	171.2	74.7	174.4	121.27535	82	82	82		1.001	5.848	584
2698	439.283	445.121		0.16	0.16	1.31	1.09	0.26	95	94	82	2.05	0.00	83	0.013	104	104	14.4	-0.03	0.56	15.54	99.6	174.5	171.0	74.6	174.2	120.32612	82	83	82		1.001	4.670	466
2699	439.446	445.287		0.16	0.17	1.32	1.09	0.26	95	94	82	2.05	0.00	83	0.015	96	97	14.4	-0.06	0.72	15.56	99.6	174.4	170.9	74.6	174.1	120.18393	82	82	82		1.001	5.965	595
2700	439.609	445.452		0.16	0.17	1.31	1.09	0.26	95	94	82	2.03	0.00	83	0.014	100	100	14.5	-0.03	0.64	15.52	99.5	174.3	170.9	74.5	174.0	120.18436	82	83	82		1.001	5.320	530
2701	439.772	445.618		0.16	0.17	1.31	1.09	0.26	95	94	82	2.05	0.00	83	0.015	96	97	14.4	0.09	0.74	15.55	99.3	174.1	170.6	74.5	173.8	120.01916	82	82	82		1.001	6.128	609
2702	439.935	445.783		0.16	0.17	1.31	1.09	0.26	95	94	82	2.03	0.00	83	0.015	96	96	14.6	-0.18	0.68	15.50	99.2	173.9	170.5	74.5	173.7	119.46036	82	83	82		1.001	5.641	560
2703	440.097	445.949		0.16	0.17	1.32	1.09	0.26	95	94	82	2.03	0.00	83	0.015	96	97	14.4	0.15	0.72	15.53	99.1	173.8	170.3	74.4	173.5	118.99013	83	83	82		1.001	5.955	591
2704	440.261	446.115		0.16	0.17	1.31	1.09	0.26	95	94	82	2.03	0.00	83	0.015	97	97	14.4	0.03	0.68	15.52	99.0	173.7	170.2	74.4	173.4	119.05576	82	83	82		1.001	5.641	559
2705	440.423	446.281		0.16	0.17	1.32	1.09	0.26	95	94	82	2.04	0.00	83	0.016	93	94	14.5	-0.13	0.65	15.47	98.8	173.5	170.0	74.4	173.2	118.65822	83	83	82		1.001	5.440	538
2706	440.586	446.446		0.16	0.17	1.31	1.08	0.26	95	94	82	2.05	0.00	83	0.015	96	96	14.4	0.11	0.66	15.50	98.7	173.4	169.9	74.4	173.1	120.03436	83	83	82		1.001	5.481	541
2707	440.748	446.612		0.16	0.17	1.32	1.09	0.26	95	94	82	2.03	0.00	87	0.014	100	101	14.5	-0.14	0.70	15.54	98.5	173.2	169.7	74.5	172.9	142.04302	83	83	82		1.001	5.804	572
2708	440.911	446.777		0.16	0.16	1.32	1.09	0.26	95	94	82	2.05	0.00	84	0.013	104	104	14.5	0.02	0.76	15.58	98.4	173.1	169.6	74.4	172.8	134.97624	83	83	82		1.001	6.293	620
2709	441.073	446.942		0.16	0.17	1.32	1.09	0.26	95	94	82	2.03	0.00	84	0.013	103	104	14.4	0.07	0.66	15.51	98.2	172.9	169.4	74.5	172.7	130.19406	83	83	82		1.001	5.482	539
2710	441.236	447.108		0.16	0.17	1.32	1.09	0.26	95	94	82	2.05	0.00	83	0.014	100	100	14.4	0.08	0.62	15.45	98.0	172.8	169.3	74.5	172.5	127.37458	83	83	82		1.001	5.155	506
2711	441.399	447.274		0.16	0.17	1.32	1.09	0.26	95	94	82	2.03	0.00	83	0.016	93	94	14.5	-0.16	0.66	15.58	97.9	172.6	169.2	74.6	172.4	125.29327	83	83	82		1.001	5.478	537
2712	441.562	447.439		0.16	0.17	1.32	1.09	0.26	95	94	82	2.03	0.00	83	0.014	100	100	14.3	0.23	0.60	15.56	97.6	172.5	169.0	74.6	172.2	124.19283	83	83	82		1.001	4.993	488
2713	441.725	447.605		0.16	0.17	1.32	1.09	0.26	95	94	82	2.04	0.00	83	0.015	96	97	14.5	-0.17	0.66	15.53	97.4	172.4	168.9	74.7	172.1	122.75633	83	83	82		1.001	5.478	534
2714	441.888	447.771		0.16	0.17	1.31	1.09	0.26	95	94	82	2.03	0.00	83	0.014	100	100	14.5	-0.01	0.70	15.48	97.3	172.2	168.8	74.7	172.0	122.67311	83	83	82		1.001	5.803	565
2715	442.051	447.937		0.16	0.17	1.32	1.09	0.26	95	94	82	2.05	0.00	83	0.016	93	94	14.4	0.08	0.69	15.61	97.1	172.1	168.7	74.8	171.9	122.02074	83	83	82		1.001	5.703	554
2716	442.214	448.102		0.16	0.16	1.32	1.09	0.26	95	94	82	2.03	0.00	83	0.015	96	96	14.4	0.00	0.72	15.54	96.9	171.9	168.5	74.8	171.7	121.55766	83	83	82		1.001	5.963	579
2717	442.377	448.268		0.16	0.17	1.31	1.08	0.26	95	94	82	2.04	0.00	83	0.014	100	100	14.3	0.06	0.64	15.45	96.7	171.8	168.3	74.8	171.6	121.60529	83	83	82		1.001	5.313	514
2718	442.540	448.433		0.16	0.17	1.31	1.09	0.26	95	94	82	2.05	0.00	83	0.015	96	96	14.3	0.00	0.62	15.53	96.5	171.7	168.3	74.9	171.5	120.61603	83	83	82		1.001	5.153	498

Elapsed Time	Particulate Sampling Data																	Fuel Weight, lb		Flow, gpm		Temperature Data, oF												
	Gas Meter Cubic Feet (1)	Gas Meter Cubic Feet (2)	Gas Meter Cubic Feet (amb)	Sample Rate, cfm (1)	Sample Rate, cfm (2)	Orifice dH (1)	Orifice dH (2)	Orifice dH (amb)	Meter oF (1)	Meter oF (2)	Meter oF (amb)	Meter Vac. In. Hg. (1)	Meter Vac. In. Hg. (2)	Dilution Tunnel Temp.	Dilution Tunnel dP	Pro. Rate (%) (1)	Pro. Rate (%) (2)	Scale Reading	Weight Change	Load Side Liquid Flow Rate	Boiler Side Liquid Flow Rate (optional)	Thermopile ΔT	Boiler to Heat Exch. Temp.	Heat Exch to Boiler Temp.	Inlet Load Temp.	Outlet Load Temp.	Stack	Filter (1)	Filter (2)	Ambient		Specific Heat of Inlet Water (BTU/lb-°F)	Mass Flow Rate of Inlet Water (lb/min)	Heat Output, Btu
2719	442.703	448.599		0.16	0.17	1.31	1.09	0.26	95	94	82	2.05	0.00	83	0.013	104	104	14.4	-0.03	0.68	15.49	96.4	171.6	168.1	74.9	171.4	119.96455	83	83	82		1.001	5.639	544
2720	442.866	448.764		0.16	0.17	1.31	1.09	0.26	95	94	82	2.04	0.00	83	0.015	96	96	14.4	0.01	0.66	15.56	96.2	171.5	168.0	75.0	171.2	119.6922	83	83	82		1.001	5.479	528
2721	443.029	448.930		0.16	0.17	1.32	1.09	0.26	95	95	82	2.04	0.00	83	0.014	100	100	14.4	-0.03	0.60	15.64	96.0	171.2	167.8	75.0	171.0	118.9404	83	83	82		1.001	4.995	480
2722	443.192	449.096		0.16	0.17	1.32	1.09	0.26	95	95	82	2.03	0.00	83	0.015	96	97	14.4	0.00	0.70	15.57	95.9	171.2	167.8	75.0	170.9	118.60088	83	83	82		1.001	5.810	558
2723	443.355	449.261		0.16	0.17	1.32	1.09	0.26	95	95	82	2.03	0.00	83	0.014	100	100	14.3	0.04	0.65	15.39	95.7	171.0	167.6	75.1	170.8	118.14143	83	83	82		1.001	5.377	515
2724	443.517	449.427		0.16	0.17	1.31	1.09	0.26	95	95	82	2.04	0.00	83	0.014	99	100	14.4	-0.07	0.70	15.52	95.6	170.9	167.5	75.1	170.6	118.49773	83	83	82		1.001	5.803	555
2725	443.680	449.593		0.16	0.17	1.32	1.09	0.26	95	95	82	2.05	0.00	83	0.015	96	97	14.4	-0.01	0.64	15.55	95.4	170.7	167.3	75.1	170.4	117.9167	83	83	82		1.001	5.315	508
2726	443.843	449.759		0.16	0.17	1.32	1.09	0.26	95	95	82	2.04	0.00	83	0.016	93	94	14.3	0.13	0.66	15.48	95.3	170.6	167.2	75.1	170.4	117.89372	83	83	82		1.001	5.476	522
2727	444.005	449.925		0.16	0.17	1.32	1.09	0.26	95	95	83	2.04	0.00	83	0.015	96	97	14.3	0.01	0.68	15.51	95.1	170.5	167.1	75.1	170.2	117.80117	83	83	83		1.001	5.637	537
2728	444.168	450.090		0.16	0.16	1.32	1.09	0.26	95	95	83	2.04	0.00	83	0.014	100	100	14.4	-0.16	0.70	15.47	95.0	170.4	167.0	75.1	170.1	117.49793	83	83	83		1.001	5.801	552
2729	444.331	450.256		0.16	0.17	1.32	1.09	0.26	95	95	82	2.03	0.00	83	0.015	96	97	14.2	0.19	0.70	15.53	94.8	170.1	166.8	75.1	169.9	117.35748	83	83	82		1.001	5.800	550
2730	444.494	450.421		0.16	0.17	1.32	1.09	0.26	96	95	82	2.03	0.00	83	0.013	103	103	14.3	-0.09	0.72	15.43	94.7	170.1	166.7	75.1	169.8	117.6304	83	83	82		1.001	5.962	565
2731	444.657	450.587		0.16	0.17	1.32	1.09	0.26	95	95	82	2.03	0.00	83	0.015	96	97	14.5	-0.18	0.68	15.52	94.6	169.9	166.5	75.1	169.7	117.1294	83	83	82		1.001	5.626	533
2732	444.820	450.752		0.16	0.17	1.32	1.09	0.26	96	95	82	2.04	0.00	83	0.013	103	103	14.4	0.07	0.70	15.56	94.5	169.8	166.4	75.1	169.6	116.36082	83	83	82		1.001	5.794	548
2733	444.983	450.918		0.16	0.17	1.32	1.09	0.26	96	95	82	2.03	0.00	83	0.015	96	97	14.4	0.03	0.64	15.42	94.3	169.7	166.3	75.1	169.4	115.98265	83	83	82		1.001	5.287	499
2734	445.146	451.084		0.16	0.17	1.31	1.09	0.26	96	95	82	2.05	0.00	83	0.014	100	100	14.4	-0.01	0.66	15.58	94.2	169.5	166.2	75.1	169.3	116.03755	83	83	82		1.001	5.478	517
2735	445.309	451.250		0.16	0.17	1.31	1.09	0.26	96	95	82	2.05	0.00	83	0.014	100	100	14.3	0.11	0.72	15.48	94.0	169.4	166.0	75.1	169.2	116.52353	83	83	82		1.001	5.962	561
2736	445.472	451.416		0.16	0.17	1.31	1.09	0.26	96	95	82	2.05	0.00	83	0.016	93	94	14.5	-0.16	0.62	15.51	93.9	169.3	165.9	75.1	169.0	116.32641	83	83	82		1.001	5.153	485
2737	445.635	451.582		0.16	0.17	1.31	1.09	0.26	96	95	82	2.04	0.00	84	0.014	100	100	14.5	-0.05	0.70	15.48	93.8	169.1	165.7	75.1	168.8	121.9887	83	83	82		1.001	5.801	544
2738	445.798	451.747		0.16	0.17	1.31	1.09	0.26	96	95	82	2.03	0.00	86	0.015	97	96	14.4	0.13	0.68	15.56	93.6	168.9	165.5	75.1	168.6	136.98886	83	83	82		1.001	5.640	528
2739	445.961	451.913		0.16	0.17	1.32	1.08	0.26	96	95	82	2.04	0.00	84	0.012	108	108	14.4	0.02	0.56	15.55	93.4	168.8	165.4	75.1	168.5	130.41934	83	83	82		1.001	4.670	437
2740	446.124	452.078		0.16	0.16	1.31	1.09	0.26	96	95	83	2.05	0.00	84	0.013	104	103	14.4	0.01	0.68	15.42	93.3	168.6	165.3	75.1	168.4	126.42227	83	83	83		1.001	5.645	527
2741	446.287	452.244		0.16	0.17	1.32	1.09	0.26	96	95	83	2.03	0.00	83	0.014	100	100	14.3	0.03	0.66	15.50	93.1	168.5	165.1	75.1	168.2	124.40554	83	83	83		1.001	5.456	509
2742	446.449	452.409		0.16	0.16	1.31	1.09	0.26	96	95	83	2.03	0.00	83	0.014	99	100	14.3	0.07	0.66	15.57	93.0	168.3	165.0	75.1	168.1	122.53458	83	83	83		1.001	5.474	510
2743	446.612	452.575		0.16	0.17	1.32	1.09	0.26	96	95	82	2.05	0.00	83	0.014	100	100	14.3	-0.05	0.70	15.48	92.8	168.3	164.9	75.1	168.0	121.65065	83	83	82		1.001	5.799	539
2744	446.775	452.741		0.16	0.17	1.32	1.09	0.26	96	95	82	2.05	0.00	83	0.015	96	97	14.3	0.03	0.64	15.49	92.8	168.1	164.8	75.1	167.9	120.72956	83	83	82		1.001	5.316	494
2745	446.938	452.906		0.16	0.17	1.32	1.09	0.26	96	95	82	2.04	0.00	83	0.013	103	103	14.2	0.05	0.66	15.48	92.6	168.0	164.7	75.1	167.7	120.27992	83	83	82		1.001	5.479	508
2746	447.101	453.072		0.16	0.17	1.32	1.09	0.26	96	95	82	2.03	0.00	83	0.015	96	97	14.3	-0.06	0.66	15.59	92.5	167.9	164.7	75.2	167.6	119.94881	83	83	82		1.001	5.478	507
2747	447.264	453.238		0.16	0.17	1.32	1.09	0.26	96	95	83	2.03	0.00	83	0.013	103	104	14.3	-0.01	0.70	15.42	92.3	167.8	164.4	75.2	167.5	118.89784	83	83	83		1.001	5.802	536
2748	447.426	453.404		0.16	0.17	1.31	1.09	0.26	96	95	83	2.04	0.00	83	0.014	99	100	14.3	0.02	0.70	15.51	92.2	167.6	164.3	75.2	167.4	118.69839	83	83	83		1.001	5.800	536
2749	447.590	453.570		0.16	0.17	1.32	1.09	0.26	96	95	83	2.05	0.00	83	0.014	100	100	14.3	-0.01	0.78	15.54	92.0	167.5	164.2	75.2	167.2	118.31023	83	83	83		1.001	6.453	594
2750	447.753	453.736		0.16	0.17	1.31	1.08	0.26	96	95	83	2.04	0.00	83	0.014	100	100	14.3	0.03	0.68	15.48	91.9	167.3	164.1	75.2	167.1	117.4302	83	83	83		1.001	5.641	519
2751	447.915	453.901		0.16	0.17	1.32	1.09	0.26	96	95	83	2.03	0.00	83	0.013	103	103	14.3	-0.01	0.67	15.48	91.8	167.2	163.9	75.2	167.0	117.13034	83	83	83		1.001	5.599	514
2752	448.079	454.066		0.16	0.16	1.31	1.09	0.26	96	95	82	2.04	0.00	83	0.014	100	100	14.3	-0.05	0.62	15.57	91.6	167.1	163.8	75.2	166.8	116.65465	83	83	82		1.001	5.153	473
2753	448.242	454.232		0.16	0.17	1.31	1.09	0.26	96	95	83	2.03	0.00	83	0.012	108	108	14.3	0.05	0.72	15.50	91.5	166.9	163.6	75.2	166.7	117.05035	83	83	83		1.001	5.962	546
2754	448.405	454.398		0.16	0.17	1.32	1.09	0.26	96	95	83	2.03	0.00	83	0.015	96	97	14.3	-0.01	0.66	15.53	91.4	166.8	163.5	75.2	166.6	116.49754	83	83	83		1.001	5.477	501
2755	448.568	454.564		0.16	0.17	1.31	1.09	0.26	96	95	83	2.04	0.00	83	0.015	96	97	14.2	0.13	0.68	15.53	91.1	166.6	163.3	75.3	166.4	116.64545	83	83	83		1.001	5.639	514
2756	448.731	454.730		0.16	0.17	1.32	1.09	0.26	96	95	83	2.04	0.00	83	0.016	93	94	14.4	-0.19	0.62	15.50	91.0	166.5	163.2	75.3	166.3	117.27934	83	83	83		1.001	5.153	470
2757	448.894	454.895		0.16	0.16	1.32	1.09	0.26	96	95	83	2.03	0.00	83	0.015	96	96	14.3	0.05	0.64	15.52	90.9	166.4	163.1	75.3	166.1	116.85166	83	83	83		1.001	5.316	484
2758	449.057	455.061		0.16	0.17	1.32	1.09	0.26	96	95	83	2.05	0.00	83	0.014	100	100	14.4	-0.08	0.68	15.56	90.7	166.3	163.0	75.3	166.0	116.53111	83	83	83		1.001	5.639	512
2759	449.219	455.228		0.16	0.17	1.32	1.09	0.26	96	95	83	2.03	0.00	83	0.016	93	94	14.3	0.07	0.66	15.47	90.6	166.1	162.9	75.3	165.9	115.99266	83	83	83		1.001	5.469	496
2760	449.382	455.393		0.16	0.16	1.32	1.09	0.26	96	95	83	2.05	0.00	83	0.015	96	96	14.3	0.05	0.62	15.53	90.5	166.0	162.8	75.3	165.8	116.37631	83	83	83		1.001	5.156	467
2761	449.545	455.559		0.16	0.17	1.32	1.09	0.26	96	95	83	2.03	0.00	83	0.014	100	100	14.3	0.03	0.62	15.58	90.3	165.9	162.7	75.3	165.6	115.93453	83	83	83		1.001	5.155	466
2762	449.708	455.725		0.16	0.17	1.32	1.09	0.26	96	95	83	2.04	0.00	83	0.015	96	97	14.4	-0.19	0.68	15.52	90.3	165.7	162.5	75.2	165.5	115.92888	83	83	83		1.001	5.635	509
2763	449.871	455.890		0.16	0.16	1.32	1.09	0.26	96	95	83	2.03	0.00	83	0.013	103	103	14.4	0.05	0.62	15.47	90.2	165.6	162.4	75.2	165.4	115.43501	83	83	83		1.001	5.153	465
2764	450.033	456.056		0.16	0.17	1.32	1.09	0.26	96	95	83	2.03	0.00	83	0.014	99	100	14.3	0.11	0.64	15.52	90.0	165.4	162.2	75.2	165.2	114.88018	83	83	83		1.001	5.314	479
2765	450.197	456.222		0.16	0.17	1.31	1.09	0.26	96	95	83	2.05	0.00	83	0.015	97	97	14.4	-0.10	0.64	15.56	90.0	165.4	162.2	75.2	165.1	114.66438	83	83	83		1.001	5.314	479
2766	450.360	456.387		0.16	0.17	1.32	1.09	0.26	96	95	83	2.05	0.00	83	0.015	96	96	14.3	0.06	0.72	15.50	89.8	165.2	162.0	75.2	165.0	114.25121	83	83	83		1.001	5.962	536
2767	450.523	456.553		0.16	0.17	1.31	1.09	0.26	96	95	83	2.04	0.00	83	0.014	100	100	14.3	-0.01	0.58	15.57	89.7	165.1	161.9	75.2	164.8	114.12903	83	83	83		1.001	4.831	434
2768	450.686	456.719		0.16	0.17	1.31	1.09	0.26	96	95	83	2.05	0.00	85	0.014	100	100	14.3	-0.01	0.68	15.49	89.5	164.9	161.7	75.2	164.6	123.12447	83	83	83		1.001	5.636	505
2769	450.849	456.885		0.16	0.17	1.31	1.09	0.26	96	95	83	2.03	0.00	86	0.015	97	97	14.3	0.01	0.70	15.49	89.4	164.8	161.6	75.2	164.5	133.1704	83	83	83		1.001	5.805	519
2770	451.012	457.051		0.16	0.17	1.31	1.09	0.26	96	95	83	2.04	0.00	84	0.015	96	97	14.2	0.08	0.73	15.46	89.3	164.6	161.5	75.2	164.4	127.16879	83	83	83		1.001	6.106	546
2771	451.175	457.217		0.16	0.17	1.31	1.09	0.26	96	95	83	2.05	0.00	84	0.014	100	100	14.3	-0.09	0.70	15.51	89.1	164.5	161.4	75.2	164.3	123.92853	83	83	83		1.001	5.801	517
2772	451.338	457.383		0.16	0.17	1.32	1.09	0.26	96	95	83	2.04	0.00	83	0.015	96	97	14.2	0.12	0.68	15.48	89.0	164.3	161.2	75.2	164.1	122.01181	83	83	83		1.001	5.640	502
2773	451.501	457.549		0.16	0.17	1.31	1.09	0.26	96	95	83	2.03	0.00	83	0.014	100	100	14.3	-0.04	0.80	15.48	88.9	164.2	161.1	75.1	164.0	120.8906	83	83	83		1.001	6.610	588
2774	451.664	457.714		0.16	0.17	1.32	1.09	0.26	96	95	83	2.04	0.00	83	0.014	100	100	14.2	0.05	0.60	15.53	88.7	164.1	161.0	75.1	163.8	119.41921	83	83	83		1.001	4.991	443
2775	451.827	457.880		0.16	0.17	1.31	1.09	0.26	96	95	83	2.03	0.00	83	0.013	103	104	14.3	-0.07	0.66	15.54	88.6	163.9	160.8	75.2	163.7	118.57932	83	83	83		1.001	5.476	486
2776	451.989	458.046		0.16	0.17	1.32	1.09	0.26	96	95	83	2.05	0.00	83	0.015	96	97	14.3	0.00	0.60	15.52	88.4	163.8	160.7	75.2	163.6	117.66133	83	83	83		1.001	4.992	442
2777	452.152	458.211		0.16	0.17	1.32	1.09	0.26	96	95	83	2.04	0.00	83	0.016	93	93	14.2	0.10	0.66	15.47	88.3	163.7	160.5	75.2	163.5	117.60065	83	83	83		1.001	5.475	484
2778	452.315	458.377		0.16	0.17	1.32	1.10	0.26	96	95	83	2.03	0.00	83	0.013	103	104	14.3	-0.16	0.59	15.41	88.2	163.6	160.5	75.2	163.4	117.35889	83	83	83		1.001	4.914	434
2779	452.478	458.543		0.16	0.17	1.32	1.09	0.26	96	95	83	2.05	0.00	83	0.015	96	97	14.2	0.12	0.71	15.51	88.1	163.5	160.4	75.2	163.3	117.11205	83	83	83		1.001	5.911	521
2780	452.641	458.709		0.16	0.17	1.31	1.09	0.26	96	95	83	2.05	0.00	83	0.016	93	94	14.3	-0.05	0.68	15.53	87.8	163.3	160.2	75.2	163.1	116.49184	83	83	83		1.001	5.637	496

Elapsed Time	Particulate Sampling Data																	Fuel Weight, lb		Flow, gpm		Temperature Data, oF												
	Gas Meter Cubic Feet (1)	Gas Meter Cubic Feet (2)	Gas Meter Cubic Feet (amb)	Sample Rate, cfm (1)	Sample Rate, cfm (2)	Orifice dH (1)	Orifice dH (2)	Orifice dH (amb)	Meter oF (1)	Meter oF (2)	Meter oF (amb)	Meter Vac. In. Hg. (1)	Meter Vac. In. Hg. (2)	Dilution Tunnel Temp.	Dilution Tunnel dP	Pro. Rate (%) (1)	Pro. Rate (%) (2)	Scale Reading	Weight Change	Load Side Liquid Flow Rate	Boiler Side Liquid Flow Rate (optional)	Thermopile ΔT	Boiler to Heat Exch. Temp.	Heat Exch to Boiler Temp.	Inlet Load Temp.	Outlet Load Temp.	Stack	Filter (1)	Filter (2)	Ambient		Specific Heat of Inlet Water (BTU/lb-°F)	Mass Flow Rate of Inlet Water (lb/min)	Heat Output, Btu
2781	452.804	458.875		0.16	0.17	1.32	1.09	0.26	96	95	83	2.05	0.00	83	0.013	103	104	14.3	-0.02	0.68	15.54	87.7	163.2	160.1	75.2	163.0	116.08675	83	83	83		1.001	5.637	495
2782	452.967	459.041		0.16	0.17	1.32	1.09	0.26	96	95	83	2.05	0.00	83	0.014	100	100	14.3	-0.06	0.74	15.50	87.6	163.1	160.0	75.2	162.8	115.65667	83	83	83		1.001	6.122	537
2783	453.130	459.207		0.16	0.17	1.32	1.09	0.26	96	95	83	2.04	0.00	83	0.015	96	97	14.3	0.07	0.68	15.48	87.4	162.9	159.8	75.3	162.7	114.92218	83	83	83		1.001	5.639	493
2784	453.293	459.373		0.16	0.17	1.32	1.09	0.26	96	95	83	2.05	0.00	83	0.014	100	100	14.3	-0.07	0.66	15.52	87.3	162.8	159.7	75.3	162.6	114.66735	83	83	83		1.001	5.475	478
2785	453.457	459.539		0.16	0.17	1.31	1.09	0.26	96	95	83	2.03	0.00	83	0.015	97	97	14.3	0.05	0.62	15.46	87.1	162.7	159.6	75.3	162.4	114.8011	83	83	83		1.001	5.153	449
2786	453.620	459.704		0.16	0.17	1.31	1.09	0.26	96	95	83	2.03	0.00	83	0.014	100	100	14.2	0.06	0.68	15.54	87.0	162.6	159.5	75.4	162.4	114.26411	83	83	83		1.001	5.630	491
2787	453.783	459.870		0.16	0.17	1.32	1.09	0.26	96	95	83	2.03	0.00	83	0.015	96	97	14.3	-0.10	0.76	15.53	86.9	162.5	159.4	75.4	162.2	113.79527	83	83	83		1.001	6.317	549
2788	453.946	460.036		0.16	0.17	1.32	1.09	0.26	96	95	83	2.03	0.00	88	0.013	104	104	14.2	0.13	0.76	15.51	86.6	162.3	159.2	75.4	162.1	135.35121	83	83	83		1.001	6.333	549
2789	454.109	460.201		0.16	0.17	1.32	1.10	0.26	96	96	83	2.03	0.00	91	0.014	100	100	14.0	0.22	0.71	15.54	86.5	162.2	159.1	75.5	162.0	148.2536	83	84	83		1.001	5.868	508
2790	454.272	460.367		0.16	0.17	1.32	1.09	0.26	96	96	83	2.04	0.00	92	0.014	100	101	13.9	0.06	0.68	15.48	86.3	162.0	158.9	75.5	161.8	156.67526	84	84	83		1.001	5.638	487
2791	454.434	460.533		0.16	0.17	1.32	1.10	0.26	96	95	83	2.05	0.00	94	0.013	104	105	13.5	0.41	0.62	15.50	86.2	161.9	158.8	75.5	161.7	163.81006	84	84	83		1.001	5.152	445
2792	454.597	460.699		0.16	0.17	1.32	1.10	0.26	96	95	83	2.05	0.00	95	0.014	101	101	13.1	0.44	0.68	15.47	86.2	161.9	158.8	75.5	161.7	170.42296	84	84	83		1.001	5.636	486
2793	454.759	460.865		0.16	0.17	1.33	1.10	0.26	96	95	83	2.05	0.00	96	0.016	94	95	12.5	0.54	0.70	15.49	86.2	162.1	159.0	75.5	161.8	179.94215	84	84	83		1.001	5.799	501
2794	454.922	461.031		0.16	0.17	1.33	1.09	0.26	96	95	83	2.05	0.00	98	0.015	98	98	12.0	0.55	0.72	15.49	86.4	162.4	159.2	75.6	162.0	190.26708	84	84	83		1.001	5.960	516
2795	455.085	461.196		0.16	0.17	1.33	1.10	0.26	96	96	83	2.05	0.00	100	0.015	98	98	11.6	0.36	0.91	15.41	86.9	162.9	158.4	75.6	162.5	201.20079	85	85	83		1.001	7.582	660
2796	455.247	461.361		0.16	0.16	1.32	1.09	0.26	96	96	83	2.05	0.00	103	0.015	97	98	11.0	0.66	0.85	15.54	87.4	163.5	158.8	75.6	163.1	212.53017	85	85	83		1.001	7.095	621
2797	455.410	461.525		0.16	0.16	1.32	1.09	0.26	96	96	83	2.06	0.00	105	0.015	98	97	10.4	0.56	1.02	15.47	88.3	164.3	159.6	75.6	163.9	220.57491	85	85	83		1.001	8.473	749
2798	455.572	461.690		0.16	0.17	1.32	1.09	0.26	96	96	83	2.06	0.00	107	0.015	98	98	10.1	0.28	0.88	15.50	89.1	165.0	160.4	75.5	164.7	227.64452	85	85	83		1.001	7.342	655
2799	455.734	461.854		0.16	0.16	1.32	1.09	0.26	96	96	83	2.07	0.00	108	0.015	98	98	9.6	0.53	0.95	15.51	90.0	165.9	161.2	75.5	165.5	233.30147	85	86	83		1.001	7.908	713
2800	455.896	462.018		0.16	0.16	1.32	1.08	0.26	96	96	83	2.06	0.00	109	0.013	105	105	9.0	0.55	0.95	15.54	91.0	166.8	162.1	75.4	166.4	237.38831	86	86	83		1.001	7.908	720
2801	456.058	462.183		0.16	0.17	1.32	1.08	0.26	96	96	83	2.07	0.00	110	0.015	98	98	8.6	0.48	0.81	15.47	91.7	167.6	163.4	75.5	167.2	240.6698	86	86	83		1.001	6.773	622
2802	456.220	462.346		0.16	0.16	1.32	1.07	0.26	96	96	83	2.07	0.00	111	0.014	102	101	8.0	0.53	0.83	15.53	92.8	168.6	164.3	75.4	168.2	243.65575	86	86	83		1.001	6.934	645
2803	456.382	462.509		0.16	0.16	1.31	1.07	0.26	96	96	83	2.09	0.00	112	0.016	95	94	7.7	0.35	0.83	15.54	93.8	169.5	165.2	75.3	169.1	246.41985	86	86	83		1.001	6.933	651
2804	456.544	462.672		0.16	0.16	1.31	1.06	0.26	96	96	83	2.08	0.00	113	0.016	95	94	7.0	0.64	0.81	15.52	94.8	170.5	166.2	75.3	170.0	249.16852	87	87	83		1.001	6.774	643
2805	456.705	462.835		0.16	0.16	1.30	1.06	0.26	96	96	83	2.08	0.00	113	0.015	98	97	6.6	0.46	0.80	15.47	95.8	171.4	167.1	75.3	171.0	251.74889	87	87	83		1.001	6.610	634
2806	456.867	462.998		0.16	0.16	1.30	1.05	0.26	96	96	83	2.10	0.00	114	0.014	102	101	6.1	0.45	0.81	15.52	96.7	172.4	168.0	75.2	172.0	254.52387	87	87	83		1.001	6.760	655
2807	457.028	463.160		0.16	0.16	1.31	1.05	0.26	96	96	83	2.09	0.00	115	0.014	101	100	5.5	0.63	0.81	15.59	97.7	173.3	169.0	75.2	172.9	257.16122	87	87	83		1.001	6.755	661
2808	457.189	463.321		0.16	0.16	1.31	1.05	0.26	96	96	83	2.09	0.00	115	0.015	98	96	4.9	0.56	0.87	15.50	98.7	174.3	169.9	75.2	173.9	259.29788	87	88	83		1.001	7.232	715
2809	457.350	463.483		0.16	0.16	1.30	1.04	0.26	96	96	83	2.10	0.00	116	0.016	95	94	4.5	0.44	0.81	15.58	99.7	175.3	170.8	75.2	174.9	261.50662	87	88	83		1.001	6.770	676
2810	457.511	463.645		0.16	0.16	1.30	1.04	0.26	96	96	83	2.12	0.00	117	0.015	98	97	3.9	0.65	0.83	15.55	100.7	176.3	171.7	75.1	175.8	263.72376	88	88	83		1.001	6.934	699
2811	457.672	463.805		0.16	0.16	1.30	1.03	0.26	96	96	83	2.11	0.00	117	0.016	95	93	3.5	0.39	0.80	15.55	101.7	177.4	172.7	75.1	176.9	265.04553	88	88	83		1.001	6.610	673
2812	457.833	463.965		0.16	0.16	1.30	1.04	0.26	96	96	82	2.11	0.00	117	0.015	98	96	2.8	0.65	0.80	15.48	102.7	178.3	173.7	75.1	177.9	266.54138	88	88	82		1.001	6.611	680
2813	457.994	464.126		0.16	0.16	1.29	1.03	0.26	96	96	83	2.13	0.00	118	0.015	98	97	2.2	0.60	0.78	15.45	103.8	179.4	174.7	75.1	178.9	268.20914	88	88	83		1.001	6.449	670
2814	458.154	464.286		0.16	0.16	1.29	1.03	0.26	96	96	83	2.13	0.00	118	0.016	94	93	1.7	0.48	0.80	15.49	104.9	180.5	175.7	75.1	180.0	270.06796	88	88	83		1.001	6.610	694
2815	458.314	464.446		0.16	0.16	1.29	1.03	0.26	96	96	83	2.13	0.00	119	0.015	98	96	1.1	0.65	0.79	15.48	105.9	181.5	176.7	75.1	181.0	271.63724	88	89	83		1.001	6.590	699
2816	458.475	464.606		0.16	0.16	1.29	1.02	0.26	96	96	82	2.13	0.00	119	0.015	98	96	0.6	0.50	0.79	15.52	107.0	182.5	177.7	75.1	182.1	273.78143	89	89	82		1.001	6.550	702
2817	458.635	464.766	598.504	0.16	0.16	1.29	1.03	0.26	96	96	83	2.13	0.00	113	0.014	100	99	0.0	0.57	0.80	15.58	107.9	183.4	178.6	75.1	183.0	271.35846	88	89	83		1.001	6.610	714
	458.635	464.766	598.504			1.32	1.08	0.26	96	95	82			89	0.014					0.68	15.48	99.0	175.1	171.4	75.8	174.8		82.96	83.02		#DIV/0!			559
																																	TOTAL:	1574407

OMNI-Test Laboratories, Inc.

Manufacturer:	Central Boiler	**Technicians:**	B. Davis
Model:	Edge 760		
Date:	08/27/19		
Run:	4		
Control #:	0117WB039E		
Test Duration:	2817		
Output Category:	I		

Test Results in Accordance with CSA B415.1-09

	HHV Basis	LHV Basis
Overall Efficiency	80.5%	86.8%
Combustion Efficiency	97.7%	97.7%
Heat Transfer Efficiency	82%	88.8%

Output Rate (kJ/h)	57,357	54,410	**(Btu/h)**
Burn Rate (kg/h)	3.58	7.89	**(lb/h)**
Input (kJ/h)	71,212	67,552	**(Btu/h)**

Test Load Weight (dry kg)	102.65	226.24	**dry lb**
MC wet (%)	17.21854305		
MC dry (%)	20.80		
Particulate (g)	82.21		
CO (g)	12,834		
Test Duration (h)	28.67		

Emissions	**Particulate**	**CO**
g/MJ Output	N/A	7.81
g/kg Dry Fuel	N/A	125.02
g/h	N/A	447.69
lb/MM Btu Output	N/A	18.14

Air/Fuel Ratio (A/F)	17.07

VERSION: **2.3** **3/23/2010**

VERSION:	2.3	3/23/2010			
Manufacturer:	Central Boiler		Appliance Type:	Non-Cat	
Model:	Edge 760				
Date:	8/27/2019		Temp. Units	F	(F or C)
Run:	4		Weight Units	lb	(kg or lb)
Control #:	0117WB039E				
Test Duration:	2817				
Output Category:	I		Fuel Data		
				Oak	
Wood Moisture (% wet):	17.22		HHV	19,887	kJ/kg
Load Weight (lb wet):	273.30		%C	50	
Burn Rate (dry kg/h):	2.19		%H	6.6	
Total Particulate Emissions:	82.21	g	%O	43.2	
			%Ash	0.2	

	Averages	0.52	4.08	#DIV/0!	150.73	81.70
					Temp. (ºF)	
Elapsed Time (min)	Fuel Weight Remaining (lb)	Flue Gas Composition (%) CO	CO_2	O_2	Flue Gas	Room Temp
0	273.30	0.14	12.66		219.5	85.0
1	272.60	0.54	2.79		206.6	85.0
2	271.20	0.17	3.75		200.0	85.0
3	270.34	1.97	9.34		215.1	85.0
4	269.32	3.62	17.55		233.7	85.0
5	268.36	0.79	19.22		246.7	85.0
6	267.57	0.15	19.11		254.7	85.0
7	266.46	0.12	18.73		258.0	85.0
8	265.58	0.10	18.08		261.1	85.0
9	264.79	0.10	18.10		263.7	85.0
10	264.39	0.10	18.13		263.7	85.0
11	263.39	0.09	17.64		263.7	85.0
12	262.14	0.07	16.27		266.4	85.0
13	261.56	0.08	17.60		268.7	85.0
14	260.65	0.08	17.44		268.0	85.0
15	260.42	0.07	17.22		270.4	85.0
16	259.37	0.06	17.36		269.9	85.0
17	259.04	0.06	16.74		250.4	85.0
18	258.67	0.05	15.25		235.2	85.0
19	258.61	0.03	10.88		227.5	85.0
20	258.51	0.12	10.33		221.3	85.0
21	258.50	0.12	10.39		214.3	85.0

22	258.33	0.05	6.41		209.2	86.0
23	258.32	0.03	5.02		204.8	85.0
24	258.35	0.03	4.10		201.5	85.0
25	258.28	0.03	3.50		198.3	85.0
26	258.23	0.04	3.24		197.6	85.0
27	258.24	0.04	2.37		196.1	85.0
28	258.29	0.16	2.19		194.1	85.0
29	258.25	0.36	2.71		191.9	85.0
30	258.15	0.54	3.22		189.5	86.0
31	258.13	0.67	3.58		187.3	86.0
32	258.19	0.75	3.78		185.0	85.0
33	258.08	0.81	3.87		182.9	86.0
34	258.15	0.83	3.86		180.7	86.0
35	258.22	0.80	3.68		178.7	86.0
36	258.13	0.76	3.45		176.8	86.0
37	258.20	0.71	3.19		175.0	86.0
38	258.19	0.66	2.94		173.2	86.0
39	258.23	0.58	2.60		171.4	86.0
40	258.23	0.55	2.44		169.8	86.0
41	258.26	0.50	2.24		168.1	86.0
42	258.24	0.46	2.07		166.6	86.0
43	258.14	0.42	1.89		165.1	86.0
44	258.15	0.38	1.72		163.6	86.0
45	258.26	0.35	1.58		162.3	86.0
46	258.11	0.32	1.46		160.9	86.0
47	258.13	0.30	1.38		159.7	86.0
48	258.26	0.28	1.28		158.6	86.0
49	258.21	0.26	1.20		157.4	86.0
50	258.29	0.24	1.11		156.4	85.0
51	258.41	0.22	1.02		155.2	85.0
52	258.28	0.21	0.97		154.2	86.0
53	258.32	0.20	0.91		153.4	86.0
54	258.23	0.19	0.86		152.5	86.0
55	258.18	0.18	0.82		151.4	86.0
56	258.20	0.17	0.77		150.5	86.0
57	258.37	0.17	0.75		149.8	86.0
58	258.39	0.16	0.71		149.1	86.0
59	258.36	0.16	0.70		148.2	86.0
60	258.30	0.15	0.68		147.3	85.0
61	258.32	0.15	0.67		146.8	86.0
62	258.22	0.15	0.66		146.1	86.0
63	258.32	0.14	0.66		145.5	86.0

64	258.27	0.14	0.67		144.8	86.0
65	258.42	0.14	0.67		144.0	86.0
66	258.22	0.14	0.67		143.0	86.0
67	258.32	0.14	0.67		142.9	86.0
68	258.36	0.14	0.67		142.0	86.0
69	258.42	0.13	0.65		141.6	86.0
70	258.16	0.13	0.64		140.7	86.0
71	258.43	0.13	0.64		140.2	85.0
72	258.38	0.13	0.63		139.8	86.0
73	258.29	0.13	0.62		139.1	86.0
74	258.39	0.13	0.63		138.6	86.0
75	258.49	0.13	0.62		137.9	86.0
76	258.39	0.13	0.63		136.8	86.0
77	258.34	0.13	0.62		136.5	86.0
78	258.30	0.13	0.63		135.9	86.0
79	258.34	0.13	0.62		135.5	86.0
80	258.30	0.13	0.63		135.1	86.0
81	258.31	0.13	0.63		134.5	86.0
82	258.36	0.13	0.64		134.4	86.0
83	258.37	0.13	0.64		133.4	86.0
84	258.32	0.13	0.64		133.2	86.0
85	258.46	0.13	0.64		132.4	85.0
86	258.21	0.13	0.63		156.0	86.0
87	258.26	2.37	14.28		152.8	86.0
88	258.11	1.95	11.55		146.7	86.0
89	258.08	1.44	8.51		142.7	86.0
90	258.19	1.16	6.95		140.1	86.0
91	258.11	0.99	6.03		138.1	86.0
92	258.03	0.91	5.60		136.8	86.0
93	258.14	0.86	5.33		135.6	86.0
94	258.20	0.82	5.09		134.6	85.0
95	258.10	0.76	4.78		134.2	86.0
96	258.20	0.71	4.48		133.7	86.0
97	258.05	0.65	4.13		133.4	86.0
98	258.06	0.61	3.83		132.8	86.0
99	258.03	0.56	3.53		132.4	86.0
100	258.19	0.52	3.30		132.3	86.0
101	258.29	0.49	3.10		131.6	86.0
102	258.09	0.45	2.86		131.3	86.0
103	258.31	0.42	2.68		130.9	86.0
104	258.18	0.39	2.48		130.6	85.0
105	258.18	0.36	2.35		130.2	85.0

106	258.29	0.34	2.18		129.6	86.0
107	258.04	0.31	2.03		129.3	86.0
108	258.22	0.29	1.91		128.7	85.0
109	258.10	0.27	1.78		128.7	86.0
110	258.18	0.25	1.68		128.3	86.0
111	258.17	0.24	1.57		128.4	85.0
112	258.07	0.22	1.48		127.9	86.0
113	258.15	0.21	1.39		127.5	86.0
114	258.06	0.20	1.32		127.3	86.0
115	258.14	0.18	1.24		126.7	86.0
116	258.20	0.18	1.17		126.6	86.0
117	257.95	0.17	1.11		152.5	85.0
118	258.04	1.74	11.13		146.6	85.0
119	257.80	1.58	9.30		140.8	86.0
120	257.98	1.17	6.98		136.9	86.0
121	257.92	0.92	5.56		134.5	86.0
122	257.87	0.74	4.55		133.0	86.0
123	257.79	0.59	3.69		131.4	86.0
124	257.86	0.49	3.07		130.2	86.0
125	257.85	0.42	2.67		129.2	86.0
126	257.89	0.37	2.36		128.5	86.0
127	257.82	0.33	2.14		127.6	86.0
128	257.76	0.30	1.94		127.7	86.0
129	257.81	0.28	1.83		127.1	85.0
130	257.86	0.26	1.72		126.6	86.0
131	257.85	0.25	1.67		126.2	85.0
132	257.84	0.24	1.62		125.9	85.0
133	257.80	0.24	1.61		126.1	85.0
134	257.87	0.24	1.61		125.5	85.0
135	257.85	0.24	1.62		124.7	86.0
136	257.79	0.25	1.67		124.7	85.0
137	257.82	0.26	1.78		124.4	85.0
138	257.84	0.28	1.90		124.8	86.0
139	257.73	0.30	2.05		124.5	85.0
140	257.79	0.31	2.15		123.9	85.0
141	257.83	0.32	2.23		123.9	85.0
142	257.73	0.33	2.29		123.9	85.0
143	257.82	0.33	2.33		123.4	85.0
144	257.78	0.33	2.33		123.4	85.0
145	257.73	0.33	2.34		123.6	85.0
146	257.80	0.32	2.29		123.4	85.0
147	257.86	0.31	2.21		123.3	85.0

148	257.56	0.30	2.14		149.0	85.0
149	257.47	1.76	11.36		142.5	85.0
150	257.43	1.39	8.88		137.3	85.0
151	257.71	1.02	6.59		133.5	85.0
152	257.43	0.79	5.12		131.0	85.0
153	257.36	0.63	4.19		129.3	85.0
154	257.47	0.52	3.47		128.0	85.0
155	257.43	0.44	2.95		127.1	85.0
156	257.53	0.38	2.59		126.2	85.0
157	257.40	0.34	2.35		125.2	85.0
158	257.48	0.31	2.13		124.5	85.0
159	257.37	0.28	1.98		124.4	85.0
160	257.55	0.27	1.87		123.8	85.0
161	257.39	0.25	1.80		123.4	85.0
162	257.32	0.25	1.74		123.1	85.0
163	257.39	0.24	1.73		122.5	85.0
164	257.40	0.24	1.70		122.1	85.0
165	257.49	0.23	1.65		121.7	85.0
166	257.46	0.23	1.62		121.8	85.0
167	257.31	0.22	1.58		120.8	85.0
168	257.43	0.22	1.57		120.9	85.0
169	257.52	0.21	1.55		120.9	85.0
170	257.53	0.22	1.61		121.0	85.0
171	257.34	0.23	1.69		120.6	85.0
172	257.47	0.25	1.81		120.4	85.0
173	257.34	0.26	1.94		120.7	85.0
174	257.43	0.27	2.02		120.5	85.0
175	257.46	0.29	2.16		119.4	85.0
176	257.41	0.29	2.17		119.2	85.0
177	257.43	0.30	2.29		119.5	85.0
178	257.43	0.31	2.30		119.3	85.0
179	257.15	0.34	2.51		145.6	85.0
180	257.17	1.30	8.87		139.1	85.0
181	257.19	0.97	6.65		134.0	85.0
182	256.99	0.70	4.81		130.4	85.0
183	257.15	0.56	3.85		127.9	85.0
184	257.19	0.47	3.18		126.1	85.0
185	257.05	0.43	2.96		125.2	85.0
186	256.97	0.42	2.89		124.5	85.0
187	257.04	0.41	2.89		123.6	85.0
188	256.97	0.41	2.88		123.3	85.0
189	257.20	0.40	2.81		122.6	85.0

190	257.01	0.38	2.73		122.0	85.0
191	257.10	0.36	2.62		121.2	85.0
192	256.96	0.34	2.48		121.1	85.0
193	257.09	0.33	2.39		120.8	85.0
194	257.09	0.31	2.27		120.8	85.0
195	257.14	0.30	2.17		119.9	85.0
196	256.97	0.27	2.03		119.6	85.0
197	256.98	0.26	1.92		119.7	85.0
198	257.03	0.25	1.84		119.3	85.0
199	257.18	0.23	1.74		119.0	85.0
200	257.06	0.22	1.67		118.8	85.0
201	257.14	0.21	1.61		118.7	85.0
202	257.00	0.20	1.54		118.6	85.0
203	256.96	0.19	1.48		118.2	85.0
204	256.99	0.18	1.41		118.0	85.0
205	257.04	0.18	1.35		117.8	85.0
206	257.02	0.17	1.29		118.3	85.0
207	256.87	0.16	1.26		117.8	85.0
208	256.96	0.16	1.20		117.6	85.0
209	257.05	0.15	1.15		117.9	85.0
210	256.90	0.27	2.10		141.6	85.0
211	256.76	1.10	8.15		136.2	85.0
212	256.73	0.79	5.86		131.8	85.0
213	256.66	0.57	4.22		128.1	85.0
214	256.75	0.43	3.18		125.8	85.0
215	256.68	0.37	2.66		123.8	85.0
216	256.71	0.34	2.46		122.6	85.0
217	256.70	0.34	2.49		121.5	85.0
218	256.78	0.36	2.59		121.2	85.0
219	256.66	0.36	2.62		120.5	85.0
220	256.66	0.35	2.59		120.5	84.0
221	256.74	0.34	2.55		119.8	85.0
222	256.70	0.32	2.42		119.6	85.0
223	256.77	0.30	2.30		119.2	84.0
224	256.74	0.28	2.18		118.5	84.0
225	256.60	0.26	2.05		133.1	84.0
226	256.13	0.79	7.31		149.3	84.0
227	255.25	2.68	9.66		166.4	84.0
228	254.47	1.82	16.49		182.2	84.0
229	253.53	3.72	18.35		199.7	85.0
230	252.69	0.43	19.47		216.6	84.0
231	251.79	0.11	18.78		228.6	84.0

232	250.86	0.11	18.40		237.7	84.0
233	250.15	0.12	18.59		244.5	84.0
234	249.50	0.13	18.62		250.0	85.0
235	248.08	0.13	18.62		254.4	84.0
236	247.21	0.14	18.73		258.3	84.0
237	246.28	0.15	18.69		261.8	84.0
238	245.33	0.16	18.71		264.7	84.0
239	244.61	0.17	18.68		266.7	84.0
240	244.13	0.17	18.13		267.6	84.0
241	242.73	0.16	18.21		269.6	84.0
242	241.90	0.16	18.41		269.1	84.0
243	240.74	0.18	18.47		269.3	84.0
244	240.20	0.15	18.11		271.9	84.0
245	239.56	0.14	17.84		272.6	84.0
246	238.53	0.10	16.68		274.1	84.0
247	237.84	0.13	17.79		274.2	84.0
248	236.91	0.13	17.79		274.6	84.0
249	235.84	0.13	17.70		275.0	84.0
250	235.39	0.13	17.76		264.7	84.0
251	234.99	0.17	16.78		245.6	84.0
252	234.66	1.24	17.71		234.8	84.0
253	234.49	1.94	15.53		227.7	84.0
254	234.33	3.93	15.49		219.8	84.0
255	234.23	1.37	11.39		213.2	84.0
256	234.13	0.14	9.02		208.2	84.0
257	234.03	0.06	7.62		204.5	84.0
258	233.80	0.05	6.45		201.4	84.0
259	233.88	0.07	6.02		199.4	84.0
260	233.75	0.06	4.77		198.1	84.0
261	233.75	0.23	4.51		196.3	84.0
262	233.81	0.61	6.28		194.1	84.0
263	233.68	0.92	7.34		192.0	84.0
264	233.62	1.10	7.85		189.6	84.0
265	233.53	1.14	7.89		187.3	84.0
266	233.65	1.18	7.81		185.1	84.0
267	233.56	1.20	7.27		182.9	84.0
268	233.47	1.17	6.66		180.8	84.0
269	233.58	1.12	6.10		178.7	84.0
270	233.50	1.05	5.54		176.6	84.0
271	233.53	0.98	5.07		174.7	84.0
272	233.52	0.92	4.68		172.9	84.0
273	233.62	0.85	4.29		171.1	84.0

274	233.39	0.78	3.95		169.5	84.0
275	233.57	0.72	3.66		167.8	84.0
276	233.57	0.66	3.36		166.3	84.0
277	233.55	0.62	3.16		164.8	84.0
278	233.60	0.58	2.96		163.3	84.0
279	233.48	0.54	2.78		161.9	84.0
280	233.53	0.51	2.66		160.5	84.0
281	233.63	0.48	2.56		159.1	84.0
282	233.56	0.46	2.46		157.8	84.0
283	233.51	0.43	2.35		156.5	84.0
284	233.59	0.42	2.32		155.4	84.0
285	233.48	0.41	2.29		154.3	84.0
286	233.47	0.40	2.25		153.2	84.0
287	233.57	0.40	2.27		152.3	84.0
288	233.63	0.40	2.29		151.4	84.0
289	233.54	0.38	2.25		150.4	84.0
290	233.52	0.38	2.28		149.4	84.0
291	233.55	0.37	2.27		148.8	84.0
292	233.53	0.37	2.30		147.7	84.0
293	233.72	0.36	2.28		146.9	84.0
294	233.56	0.36	2.25		145.9	84.0
295	233.52	0.36	2.27		145.4	84.0
296	233.63	0.35	2.27		144.5	84.0
297	233.73	0.35	2.27		143.8	84.0
298	233.60	0.34	2.27		143.4	84.0
299	233.56	0.34	2.26		142.8	84.0
300	233.67	0.34	2.28		142.2	84.0
301	233.65	0.33	2.27		141.8	84.0
302	233.66	0.33	2.29		140.9	84.0
303	233.68	0.33	2.30		140.4	84.0
304	233.64	0.33	2.33		140.0	84.0
305	233.59	0.33	2.34		139.4	84.0
306	233.53	0.33	2.34		139.1	84.0
307	233.58	0.33	2.37		138.1	84.0
308	233.61	0.32	2.34		137.8	84.0
309	233.64	0.32	2.35		137.4	84.0
310	233.58	0.32	2.36		136.4	83.0
311	233.66	0.32	2.36		136.2	84.0
312	233.55	0.32	2.38		136.0	84.0
313	233.54	0.31	2.39		135.8	83.0
314	233.61	0.32	2.43		135.1	83.0
315	233.59	0.31	2.39		134.7	83.0

316	233.55	0.30	2.39		134.6	83.0
317	233.41	0.30	2.40		134.4	84.0
318	233.62	0.30	2.38		133.5	83.0
319	233.40	0.30	2.40		157.0	83.0
320	233.11	1.15	9.29		160.2	83.0
321	232.96	0.94	6.68		153.8	83.0
322	233.10	0.70	5.08		149.0	83.0
323	232.99	0.61	4.65		145.6	83.0
324	233.02	0.53	4.28		142.9	83.0
325	233.04	0.46	3.81		140.7	83.0
326	232.85	0.40	3.36		138.8	83.0
327	232.93	0.35	2.95		137.7	83.0
328	233.03	0.30	2.64		136.5	83.0
329	233.08	0.27	2.38		135.6	83.0
330	232.95	0.24	2.19		134.5	83.0
331	233.00	0.21	1.98		133.8	83.0
332	233.01	0.20	1.87		133.0	83.0
333	232.98	0.18	1.77		131.9	83.0
334	233.00	0.16	1.63		131.5	83.0
335	233.06	0.16	1.59		131.1	83.0
336	232.91	0.15	1.52		130.9	83.0
337	233.11	0.14	1.48		130.1	83.0
338	232.98	0.13	1.42		130.3	83.0
339	232.92	0.12	1.39		129.8	83.0
340	232.98	0.12	1.35		128.9	83.0
341	233.02	0.11	1.33		129.0	83.0
342	232.97	0.11	1.30		128.6	83.0
343	233.10	0.10	1.28		128.4	83.0
344	233.05	0.10	1.28		127.5	83.0
345	232.95	0.10	1.28		127.6	83.0
346	233.07	0.10	1.28		127.3	83.0
347	232.82	0.10	1.26		126.6	83.0
348	232.96	0.10	1.26		125.9	83.0
349	232.91	0.09	1.22		125.9	83.0
350	232.86	0.09	1.25		151.6	83.0
351	232.78	0.40	5.52		150.6	83.0
352	232.59	0.55	4.81		145.2	83.0
353	232.61	0.39	3.32		141.2	83.0
354	232.74	0.34	2.94		138.2	83.0
355	232.67	0.31	2.77		136.2	83.0
356	232.56	0.27	2.56		134.4	83.0
357	232.65	0.24	2.40		133.0	83.0

358	232.62	0.23	2.28		131.8	83.0
359	232.60	0.21	2.16		131.2	83.0
360	232.57	0.19	2.09		129.9	83.0
361	232.56	0.18	2.00		129.4	83.0
362	232.46	0.17	1.97		128.7	83.0
363	232.50	0.16	1.89		128.1	82.0
364	232.48	0.15	1.85		127.5	83.0
365	232.61	0.15	1.82		127.2	83.0
366	232.62	0.14	1.78		126.2	83.0
367	232.47	0.13	1.72		125.8	83.0
368	232.51	0.13	1.72		125.7	82.0
369	232.44	0.12	1.69		125.5	82.0
370	232.43	0.12	1.67		125.3	82.0
371	232.58	0.12	1.65		124.5	83.0
372	232.53	0.11	1.62		124.4	83.0
373	232.61	0.11	1.62		123.8	82.0
374	232.57	0.11	1.60		123.7	83.0
375	232.47	0.11	1.59		123.1	82.0
376	232.67	0.10	1.57		122.8	83.0
377	232.57	0.10	1.57		122.7	82.0
378	232.53	0.10	1.56		122.6	82.0
379	232.61	0.10	1.57		122.5	82.0
380	232.57	0.10	1.57		121.9	82.0
381	232.45	0.10	1.52		145.6	82.0
382	232.35	0.30	4.85		144.1	82.0
383	232.15	0.26	3.34		138.9	82.0
384	232.22	0.18	2.31		135.4	82.0
385	232.19	0.17	2.07		132.6	82.0
386	232.28	0.16	1.99		130.6	82.0
387	232.21	0.15	1.94		129.1	82.0
388	232.12	0.15	1.89		127.8	82.0
389	232.34	0.14	1.83		126.5	82.0
390	232.26	0.13	1.80		125.5	82.0
391	232.30	0.13	1.77		124.9	82.0
392	232.16	0.13	1.74		124.2	82.0
393	232.22	0.12	1.72		123.8	82.0
394	232.14	0.12	1.70		123.4	82.0
395	232.18	0.12	1.70		122.8	82.0
396	232.08	0.12	1.72		122.6	82.0
397	232.25	0.12	1.70		122.0	82.0
398	232.23	0.12	1.71		121.7	82.0
399	232.20	0.12	1.70		121.4	82.0

400	232.10	0.12	1.72		121.1	82.0
401	232.24	0.11	1.72		121.1	82.0
402	232.16	0.11	1.73		120.3	82.0
403	232.08	0.11	1.72		120.3	82.0
404	232.21	0.11	1.72		120.4	82.0
405	232.19	0.11	1.73		119.7	82.0
406	232.20	0.11	1.69		120.0	82.0
407	232.34	0.11	1.70		119.8	82.0
408	232.26	0.11	1.68		119.6	82.0
409	232.24	0.11	1.66		119.5	82.0
410	232.28	0.10	1.65		119.4	82.0
411	232.21	0.10	1.65		119.1	82.0
412	232.12	0.10	1.63		140.5	82.0
413	232.00	0.25	4.11		139.0	82.0
414	232.06	0.16	2.45		134.4	82.0
415	231.96	0.12	1.73		130.8	82.0
416	232.10	0.10	1.56		128.5	82.0
417	232.01	0.10	1.55		126.6	82.0
418	232.10	0.10	1.56		125.3	82.0
419	231.93	0.10	1.51		123.6	82.0
420	232.03	0.10	1.46		122.3	82.0
421	231.87	0.10	1.46		121.9	82.0
422	231.88	0.10	1.46		121.2	82.0
423	231.94	0.10	1.50		120.7	82.0
424	231.97	0.10	1.51		120.1	82.0
425	231.99	0.11	1.52		120.0	82.0
426	231.97	0.11	1.55		119.4	82.0
427	232.08	0.11	1.58		119.1	82.0
428	231.91	0.11	1.57		118.2	82.0
429	231.97	0.11	1.57		117.7	82.0
430	231.98	0.11	1.59		117.8	82.0
431	232.01	0.11	1.61		117.6	82.0
432	231.90	0.11	1.61		117.5	82.0
433	232.02	0.11	1.61		117.4	82.0
434	231.93	0.11	1.62		117.2	81.0
435	231.89	0.11	1.63		117.1	82.0
436	231.98	0.11	1.61		116.3	82.0
437	231.89	0.11	1.61		116.2	82.0
438	231.96	0.11	1.61		116.1	82.0
439	232.07	0.11	1.61		115.7	82.0
440	231.91	0.11	1.61		115.4	82.0
441	232.11	0.11	1.58		115.5	82.0

442	231.90	0.11	1.60		115.4	81.0
443	231.90	0.11	1.60		136.7	82.0
444	231.83	0.23	3.54		134.8	81.0
445	231.75	0.13	2.18		130.7	81.0
446	231.78	0.09	1.55		127.5	81.0
447	231.64	0.08	1.33		125.3	82.0
448	231.75	0.08	1.33		123.3	81.0
449	231.74	0.08	1.31		121.9	82.0
450	231.70	0.08	1.30		120.3	81.0
451	231.61	0.08	1.28		119.6	81.0
452	231.64	0.08	1.28		118.8	81.0
453	231.75	0.08	1.27		118.2	81.0
454	231.69	0.09	1.30		117.8	81.0
455	231.63	0.09	1.32		117.5	81.0
456	231.58	0.09	1.35		116.9	81.0
457	231.68	0.09	1.35		116.6	81.0
458	231.59	0.10	1.37		116.3	81.0
459	231.78	0.10	1.38		116.3	81.0
460	231.67	0.10	1.42		115.7	81.0
461	231.73	0.11	1.44		115.7	81.0
462	231.70	0.11	1.45		115.4	81.0
463	231.68	0.11	1.47		115.3	81.0
464	231.62	0.11	1.49		115.2	81.0
465	231.61	0.11	1.48		134.7	81.0
466	231.52	0.31	4.29		146.2	81.0
467	231.11	0.41	2.60		154.0	81.0
468	230.72	1.04	3.51		160.7	81.0
469	230.39	2.43	5.51		168.4	81.0
470	229.94	3.24	8.21		177.7	81.0
471	229.32	3.13	10.73		185.8	81.0
472	228.73	3.32	13.78		194.5	81.0
473	228.13	2.03	15.76		205.0	81.0
474	227.65	1.18	14.94		214.9	81.0
475	226.97	0.85	15.16		223.1	81.0
476	226.17	0.62	15.38		230.4	81.0
477	225.51	0.39	15.98		237.2	81.0
478	224.90	0.17	16.26		243.0	81.0
479	224.15	0.10	16.94		247.9	81.0
480	223.47	0.11	17.03		251.1	81.0
481	222.63	0.11	17.01		254.6	81.0
482	221.86	0.12	17.41		257.7	81.0
483	221.14	0.13	17.38		260.2	81.0

484	220.42	0.13	17.32		262.7	81.0
485	219.55	0.14	17.34		265.0	81.0
486	218.85	0.14	17.42		266.5	81.0
487	217.92	0.14	17.45		267.8	81.0
488	217.15	0.14	17.29		269.9	81.0
489	216.41	0.12	17.25		272.3	81.0
490	215.48	0.13	17.57		274.6	81.0
491	214.68	0.15	17.82		276.7	81.0
492	214.02	0.14	17.67		277.6	81.0
493	213.13	0.13	17.29		278.0	81.0
494	212.33	0.12	16.42		253.7	81.0
495	212.23	0.31	16.29		238.0	81.0
496	212.13	0.30	14.30		229.6	81.0
497	211.74	1.50	15.63		222.6	81.0
498	211.62	1.03	15.78		215.1	81.0
499	211.40	0.13	9.18		210.0	81.0
500	211.50	0.07	7.51		205.8	81.0
501	211.39	0.07	6.09		202.6	81.0
502	211.38	0.08	5.30		199.5	81.0
503	211.39	0.09	4.53		198.4	81.0
504	211.22	0.09	2.98		196.6	81.0
505	211.24	0.32	3.58		194.5	81.0
506	211.13	0.54	4.36		192.2	81.0
507	211.32	0.67	4.77		189.8	81.0
508	211.39	0.70	4.75		187.5	81.0
509	211.23	0.73	4.76		185.1	81.0
510	211.22	0.71	4.60		182.8	81.0
511	211.19	0.67	4.35		180.6	81.0
512	211.20	0.62	4.02		178.4	81.0
513	211.27	0.57	3.70		176.3	81.0
514	211.31	0.51	3.35		174.3	81.0
515	211.15	0.46	3.02		172.4	81.0
516	211.24	0.41	2.74		170.5	81.0
517	211.20	0.36	2.47		168.7	81.0
518	211.27	0.32	2.21		166.9	81.0
519	211.22	0.28	2.00		165.2	81.0
520	211.25	0.25	1.81		163.6	81.0
521	211.30	0.22	1.64		162.0	81.0
522	211.24	0.20	1.52		160.4	80.0
523	211.27	0.19	1.40		159.0	81.0
524	211.32	0.17	1.31		157.7	81.0
525	211.23	0.16	1.21		156.4	80.0

526	211.48	0.15	1.14		155.2	81.0
527	211.30	0.14	1.06		154.0	80.0
528	211.35	0.13	0.99		152.9	80.0
529	211.35	0.13	0.94		151.9	80.0
530	211.23	0.12	0.89		150.8	80.0
531	211.38	0.11	0.84		149.8	80.0
532	211.25	0.11	0.80		148.8	80.0
533	211.44	0.10	0.76		148.0	80.0
534	211.36	0.10	0.73		147.1	80.0
535	211.39	0.10	0.71		146.3	80.0
536	211.33	0.10	0.69		145.3	80.0
537	211.34	0.09	0.67		144.3	80.0
538	211.46	0.09	0.65		143.7	80.0
539	211.44	0.09	0.64		142.5	80.0
540	211.42	0.09	0.62		141.7	80.0
541	211.42	0.09	0.62		141.0	80.0
542	211.47	0.09	0.62		140.7	80.0
543	211.41	0.09	0.62		140.0	80.0
544	211.40	0.09	0.62		139.1	80.0
545	211.46	0.09	0.62		138.7	80.0
546	211.29	0.09	0.62		137.9	80.0
547	211.46	0.09	0.63		137.6	80.0
548	211.51	0.10	0.65		136.9	80.0
549	211.41	0.10	0.65		136.2	80.0
550	211.49	0.10	0.65		135.3	80.0
551	211.42	0.10	0.67		135.0	80.0
552	211.56	0.10	0.69		134.5	80.0
553	211.54	0.11	0.72		133.9	80.0
554	211.51	0.11	0.74		133.2	80.0
555	211.57	0.12	0.77		132.7	80.0
556	211.59	0.12	0.79		132.3	80.0
557	211.59	0.13	0.82		131.9	80.0
558	211.60	0.13	0.84		131.8	80.0
559	211.52	0.13	0.87		131.0	80.0
560	211.59	0.14	0.89		130.3	80.0
561	211.56	0.14	0.92		129.7	80.0
562	211.61	0.15	0.94		129.6	80.0
563	211.14	0.15	0.98		158.6	80.0
564	211.20	1.14	7.49		153.4	80.0
565	211.13	0.74	4.88		148.1	80.0
566	211.00	0.63	4.38		144.3	80.0
567	211.10	0.58	4.16		141.1	80.0

568	211.16	0.51	3.78		138.7	80.0
569	211.12	0.44	3.34		136.7	80.0
570	211.08	0.38	2.93		134.8	80.0
571	211.09	0.33	2.59		133.3	80.0
572	211.08	0.29	2.29		132.2	80.0
573	211.17	0.25	2.05		131.0	80.0
574	211.23	0.23	1.86		130.2	80.0
575	211.06	0.20	1.66		129.7	80.0
576	211.04	0.18	1.53		128.6	80.0
577	211.16	0.17	1.41		128.0	80.0
578	211.07	0.15	1.31		127.7	80.0
579	211.14	0.14	1.22		127.2	80.0
580	211.15	0.13	1.14		126.4	80.0
581	211.05	0.12	1.08		126.2	80.0
582	211.14	0.11	1.02		125.6	80.0
583	211.14	0.10	0.97		125.7	80.0
584	211.11	0.10	0.93		125.3	80.0
585	211.11	0.09	0.91		124.4	80.0
586	211.16	0.09	0.88		124.1	80.0
587	211.11	0.08	0.86		123.8	80.0
588	211.09	0.08	0.84		123.0	80.0
589	211.17	0.08	0.82		123.0	80.0
590	211.19	0.07	0.80		122.1	80.0
591	211.20	0.07	0.80		122.2	80.0
592	211.16	0.07	0.78		121.6	80.0
593	211.20	0.07	0.79		121.9	80.0
594	210.99	0.07	0.83		149.4	80.0
595	211.00	0.46	3.71		143.3	80.0
596	210.89	0.31	2.53		138.6	80.0
597	210.93	0.25	2.17		135.1	79.0
598	210.82	0.24	2.19		132.5	80.0
599	210.88	0.22	2.15		130.7	80.0
600	210.76	0.20	2.05		129.2	80.0
601	210.78	0.19	1.96		128.3	79.0
602	210.78	0.17	1.86		127.5	80.0
603	210.85	0.16	1.75		126.7	79.0
604	210.88	0.15	1.68		125.4	79.0
605	210.77	0.13	1.57		124.9	79.0
606	210.80	0.13	1.52		123.9	79.0
607	210.89	0.12	1.45		123.2	79.0
608	210.81	0.11	1.38		122.8	79.0
609	210.70	0.10	1.31		122.0	79.0

610	210.93	0.09	1.25		121.7	79.0
611	210.86	0.09	1.21		121.3	79.0
612	210.82	0.08	1.17		121.0	79.0
613	210.89	0.08	1.13		121.0	79.0
614	210.78	0.08	1.10		120.1	79.0
615	210.74	0.07	1.07		120.3	79.0
616	210.94	0.07	1.04		120.1	79.0
617	210.80	0.07	1.03		119.4	79.0
618	210.82	0.07	1.01		118.6	78.0
619	210.88	0.06	0.98		118.6	78.0
620	210.88	0.06	0.95		117.8	78.0
621	210.93	0.06	0.94		117.9	78.0
622	210.85	0.06	0.93		118.0	78.0
623	210.98	0.06	0.93		117.5	78.0
624	210.78	0.06	0.92		116.5	78.0
625	210.70	0.10	1.38		142.4	78.0
626	210.65	0.17	2.49		137.0	78.0
627	210.78	0.11	1.66		132.9	78.0
628	210.64	0.09	1.33		130.1	77.0
629	210.69	0.08	1.30		127.6	77.0
630	210.70	0.08	1.27		125.7	77.0
631	210.70	0.08	1.23		124.6	77.0
632	210.62	0.07	1.18		123.2	78.0
633	210.56	0.07	1.13		122.1	78.0
634	210.64	0.07	1.09		121.5	78.0
635	210.66	0.07	1.07		121.0	77.0
636	210.65	0.06	1.04		120.1	77.0
637	210.66	0.06	1.00		119.6	77.0
638	210.55	0.06	1.00		119.0	77.0
639	210.73	0.06	1.00		118.3	77.0
640	210.73	0.06	1.00		117.6	77.0
641	210.68	0.06	0.99		117.3	77.0
642	210.66	0.06	0.99		116.6	77.0
643	210.63	0.06	0.99		116.4	77.0
644	210.83	0.06	0.99		116.1	77.0
645	210.71	0.06	1.00		116.6	77.0
646	210.67	0.06	0.99		116.6	77.0
647	210.68	0.06	0.98		115.8	77.0
648	210.64	0.06	0.98		115.0	76.0
649	210.70	0.06	0.97		114.9	76.0
650	210.79	0.06	0.96		115.2	76.0
651	210.74	0.06	0.96		114.9	76.0

652	210.75	0.06	0.96		114.7	76.0
653	210.75	0.06	0.96		114.2	76.0
654	210.73	0.06	0.95		113.9	76.0
655	210.77	0.06	0.95		117.0	76.0
656	210.71	0.20	2.68		137.5	76.0
657	210.61	0.16	2.27		131.8	76.0
658	210.43	0.11	1.58		127.8	76.0
659	210.53	0.08	1.22		124.6	76.0
660	210.55	0.08	1.15		122.3	76.0
661	210.57	0.00	0.16		120.9	76.0
662	210.54	0.00	0.07		120.0	76.0
663	210.56	0.07	1.05		118.8	76.0
664	210.61	0.06	1.03		117.8	76.0
665	210.62	0.06	1.00		116.5	76.0
666	210.62	0.06	1.00		116.5	76.0
667	210.49	0.06	0.98		115.6	76.0
668	210.52	0.06	0.96		114.9	76.0
669	210.63	0.06	0.96		114.8	76.0
670	210.45	0.06	0.98		115.4	76.0
671	210.56	0.06	0.97		114.8	76.0
672	210.48	0.06	0.98		114.2	76.0
673	210.60	0.06	0.98		114.0	76.0
674	210.61	0.06	0.99		113.9	76.0
675	210.68	0.06	0.98		113.2	76.0
676	210.52	0.06	0.98		113.2	76.0
677	210.65	0.06	0.98		112.6	76.0
678	210.66	0.06	0.98		112.0	76.0
679	210.66	0.06	0.96		113.4	75.0
680	210.46	0.15	1.97		139.8	76.0
681	210.35	0.36	2.39		150.7	76.0
682	210.11	0.85	2.51		158.3	76.0
683	209.57	2.21	4.09		167.6	76.0
684	209.02	4.47	7.32		177.6	75.0
685	208.69	4.77	10.76		188.0	76.0
686	207.92	4.15	14.21		199.5	75.0
687	207.42	2.42	14.35		210.5	76.0
688	206.99	1.76	14.02		218.1	76.0
689	206.36	1.20	14.21		224.6	75.0
690	205.84	0.31	14.98		230.4	76.0
691	205.04	0.27	14.81		234.9	76.0
692	204.61	0.15	15.09		238.4	76.0
693	203.95	0.14	15.03		241.3	75.0

694	203.28	0.15	15.13		244.1	75.0
695	202.51	0.14	15.29		247.2	75.0
696	201.84	0.14	15.42		250.3	75.0
697	201.31	0.14	15.61		253.5	76.0
698	200.36	0.13	15.77		256.4	76.0
699	199.73	0.13	15.98		259.3	76.0
700	198.90	0.13	16.10		262.1	76.0
701	198.13	0.13	16.30		264.6	76.0
702	197.20	0.13	16.34		267.0	76.0
703	196.64	0.13	16.47		268.7	76.0
704	195.81	0.13	16.20		270.3	76.0
705	195.24	0.14	16.39		272.5	76.0
706	194.23	0.13	16.53		274.6	76.0
707	193.37	0.13	16.52		276.4	76.0
708	192.52	0.12	16.69		278.1	76.0
709	191.82	0.12	16.61		279.5	76.0
710	191.02	0.11	16.43		266.1	76.0
711	190.62	0.05	12.90		245.7	76.0
712	190.26	0.11	13.05		233.3	76.0
713	190.03	0.58	14.00		224.6	75.0
714	189.79	0.46	13.27		217.7	76.0
715	189.82	0.20	9.48		212.5	76.0
716	189.63	0.12	9.43		208.2	76.0
717	189.58	0.17	7.61		204.7	76.0
718	189.51	0.23	6.33		201.4	76.0
719	189.34	0.25	5.57		199.6	76.0
720	189.37	0.21	4.00		197.8	76.0
721	189.41	0.39	3.76		195.8	76.0
722	189.32	0.77	4.90		193.6	76.0
723	189.26	0.98	5.48		191.2	76.0
724	189.25	1.07	5.65		188.8	76.0
725	189.21	1.09	5.60		186.3	76.0
726	189.41	1.07	5.41		183.9	76.0
727	189.33	1.01	5.15		181.6	76.0
728	189.21	0.92	4.74		179.4	76.0
729	189.20	0.84	4.34		177.1	76.0
730	189.29	0.74	3.91		175.0	76.0
731	189.36	0.66	3.52		173.0	76.0
732	189.22	0.57	3.17		171.1	76.0
733	189.17	0.50	2.85		169.2	76.0
734	189.36	0.45	2.58		167.4	76.0
735	189.28	0.39	2.32		165.6	76.0

736	189.25	0.35	2.11		163.9	76.0
737	189.29	0.31	1.92		162.3	76.0
738	189.43	0.27	1.77		160.7	76.0
739	189.25	0.24	1.62		159.1	76.0
740	189.40	0.22	1.51		157.6	76.0
741	189.37	0.20	1.40		156.1	76.0
742	189.39	0.19	1.31		154.8	76.0
743	189.38	0.17	1.22		153.6	76.0
744	189.38	0.16	1.14		152.5	76.0
745	189.41	0.15	1.09		151.4	76.0
746	189.43	0.14	1.02		150.5	76.0
747	189.28	0.13	0.97		149.5	76.0
748	189.44	0.13	0.92		148.4	76.0
749	189.44	0.12	0.88		147.4	76.0
750	189.38	0.11	0.84		146.5	76.0
751	189.55	0.11	0.80		145.6	76.0
752	189.39	0.10	0.76		144.5	76.0
753	189.44	0.10	0.73		143.7	76.0
754	189.40	0.10	0.70		142.9	76.0
755	189.41	0.10	0.68		142.1	76.0
756	189.48	0.09	0.66		141.4	76.0
757	189.51	0.09	0.63		140.4	76.0
758	189.51	0.09	0.61		139.4	76.0
759	189.31	0.09	0.61		139.0	76.0
760	189.42	0.09	0.59		138.2	76.0
761	189.62	0.09	0.57		137.6	76.0
762	189.43	0.09	0.57		137.2	76.0
763	189.44	0.09	0.55		136.5	76.0
764	189.51	0.09	0.55		135.8	76.0
765	189.48	0.09	0.55		135.2	76.0
766	189.38	0.09	0.54		135.0	76.0
767	189.60	0.09	0.54		134.0	76.0
768	189.58	0.09	0.54		133.4	76.0
769	189.58	0.09	0.54		133.3	76.0
770	189.51	0.09	0.53		132.8	76.0
771	189.61	0.09	0.52		132.0	76.0
772	189.56	0.09	0.53		131.7	76.0
773	189.58	0.09	0.53		131.2	76.0
774	189.48	0.09	0.53		130.2	76.0
775	189.48	0.10	0.54		130.2	76.0
776	189.29	0.10	0.54		128.8	76.0
777	189.70	0.10	0.54		128.7	76.0

778	189.45	0.10	0.53		128.6	76.0
779	189.35	0.10	0.54		154.4	76.0
780	189.10	1.94	8.97		156.4	76.0
781	189.08	0.60	3.75		150.1	76.0
782	188.96	0.48	3.15		145.4	76.0
783	189.12	0.50	3.30		141.8	76.0
784	189.15	0.48	3.20		139.0	76.0
785	189.03	0.44	2.93		136.8	76.0
786	189.04	0.39	2.62		135.2	76.0
787	189.26	0.33	2.29		133.4	76.0
788	189.04	0.29	2.01		132.1	76.0
789	189.09	0.25	1.73		130.6	76.0
790	189.03	0.22	1.53		129.3	76.0
791	189.09	0.19	1.34		128.3	76.0
792	189.25	0.17	1.20		127.6	76.0
793	189.16	0.15	1.08		126.9	76.0
794	189.00	0.14	0.98		126.5	77.0
795	188.98	0.12	0.87		125.9	77.0
796	189.05	0.11	0.80		125.2	76.0
797	189.14	0.10	0.73		125.1	76.0
798	189.35	0.09	0.67		124.6	77.0
799	189.18	0.08	0.61		123.6	76.0
800	189.00	0.08	0.57		123.1	77.0
801	189.17	0.07	0.53		122.8	76.0
802	189.21	0.06	0.50		122.5	76.0
803	189.12	0.06	0.48		121.9	76.0
804	189.10	0.06	0.46		121.0	77.0
805	189.02	0.05	0.44		120.9	77.0
806	189.20	0.05	0.43		120.3	77.0
807	189.01	0.05	0.41		120.6	77.0
808	189.28	0.05	0.40		120.7	77.0
809	189.18	0.05	0.39		120.5	77.0
810	188.97	0.04	0.38		146.1	77.0
811	188.94	0.36	2.92		145.3	77.0
812	189.05	0.26	1.73		139.9	77.0
813	188.88	0.19	1.26		135.9	77.0
814	188.80	0.19	1.31		132.6	77.0
815	188.86	0.19	1.37		130.4	77.0
816	188.71	0.17	1.35		128.7	77.0
817	188.77	0.16	1.29		127.2	77.0
818	188.77	0.15	1.20		126.3	77.0
819	188.87	0.13	1.12		125.1	77.0

820	188.75	0.12	1.04		124.0	77.0
821	188.75	0.11	0.95		123.5	77.0
822	188.86	0.10	0.88		123.5	77.0
823	189.01	0.09	0.81		123.1	77.0
824	188.77	0.08	0.75		121.9	77.0
825	188.71	0.07	0.68		121.0	77.0
826	188.88	0.06	0.62		120.7	77.0
827	188.83	0.06	0.59		120.4	77.0
828	188.84	0.06	0.56		119.9	77.0
829	188.90	0.05	0.53		119.1	77.0
830	188.90	0.05	0.51		119.0	77.0
831	188.90	0.05	0.49		118.9	77.0
832	188.99	0.04	0.47		118.3	77.0
833	188.89	0.04	0.45		117.8	77.0
834	188.85	0.04	0.44		117.4	77.0
835	188.78	0.04	0.43		117.1	77.0
836	188.94	0.04	0.41		116.6	77.0
837	188.92	0.03	0.40		116.2	77.0
838	188.76	0.03	0.39		116.5	77.0
839	188.99	0.03	0.39		115.7	77.0
840	188.89	0.03	0.38		115.3	77.0
841	188.76	0.03	0.37		141.5	77.0
842	188.74	0.18	2.23		139.4	77.0
843	188.78	0.08	1.09		134.4	77.0
844	188.63	0.05	0.72		130.7	77.0
845	188.59	0.05	0.70		128.1	78.0
846	188.67	0.05	0.71		126.2	78.0
847	188.74	0.05	0.69		124.5	78.0
848	188.77	0.05	0.67		123.5	77.0
849	188.85	0.04	0.63		121.8	78.0
850	188.77	0.04	0.58		121.3	78.0
851	188.81	0.04	0.54		120.1	78.0
852	188.78	0.04	0.52		118.8	78.0
853	188.52	0.03	0.49		118.4	78.0
854	188.76	0.03	0.47		118.6	78.0
855	188.63	0.03	0.46		118.0	78.0
856	188.71	0.03	0.44		117.3	78.0
857	188.65	0.03	0.43		116.7	78.0
858	188.67	0.03	0.41		116.5	78.0
859	188.68	0.03	0.41		116.7	78.0
860	188.53	0.02	0.39		116.1	78.0
861	188.66	0.02	0.39		115.6	78.0

862	188.59	0.02	0.37		116.2	78.0
863	188.68	0.02	0.36		116.0	78.0
864	188.60	0.02	0.35		115.2	78.0
865	188.60	0.02	0.35		115.0	78.0
866	188.69	0.02	0.34		114.3	78.0
867	188.73	0.02	0.34		113.9	78.0
868	188.78	0.02	0.33		113.8	78.0
869	188.55	0.02	0.32		114.4	78.0
870	188.60	0.02	0.32		113.7	78.0
871	188.62	0.02	0.32		113.0	78.0
872	188.59	0.02	0.31		136.1	78.0
873	188.53	0.16	1.92		135.1	78.0
874	188.50	0.14	1.36		130.2	78.0
875	188.53	0.10	0.96		126.8	78.0
876	188.42	0.10	0.87		123.9	78.0
877	188.50	0.10	0.85		121.9	78.0
878	188.52	0.09	0.80		120.4	78.0
879	188.53	0.08	0.76		119.2	78.0
880	188.52	0.07	0.72		118.3	78.0
881	188.53	0.07	0.69		117.8	78.0
882	188.46	0.06	0.67		117.0	78.0
883	188.35	0.06	0.63		116.2	78.0
884	188.37	0.06	0.61		115.9	78.0
885	188.44	0.05	0.57		115.0	78.0
886	188.55	0.05	0.56		114.7	78.0
887	188.41	0.05	0.55		114.6	78.0
888	188.43	0.05	0.53		113.9	78.0
889	188.43	0.04	0.50		113.9	78.0
890	188.41	0.04	0.49		113.3	78.0
891	188.45	0.04	0.48		113.0	78.0
892	188.38	0.04	0.46		113.2	78.0
893	188.32	0.04	0.45		112.7	78.0
894	188.39	0.03	0.43		111.9	78.0
895	188.46	0.03	0.42		111.8	78.0
896	188.54	0.03	0.41		111.6	78.0
897	188.56	0.03	0.39		111.4	78.0
898	188.49	0.03	0.39		111.5	78.0
899	188.42	0.03	0.37		111.0	78.0
900	188.48	0.03	0.37		111.3	78.0
901	188.31	0.03	0.36		110.7	78.0
902	188.42	0.03	0.36		110.3	78.0
903	188.40	0.02	0.35		132.5	78.0

904	188.25	0.18	2.40		130.7	78.0
905	188.26	0.14	1.75		126.0	78.0
906	188.16	0.10	1.27		131.5	78.0
907	188.05	0.44	2.88		148.1	78.0
908	187.93	1.81	3.20		159.3	78.0
909	187.54	1.99	4.20		167.3	78.0
910	187.10	2.61	5.50		175.1	78.0
911	186.52	4.93	9.14		183.1	78.0
912	186.07	5.00	10.73		189.4	78.0
913	185.59	5.20	11.64		195.7	78.0
914	184.98	3.80	12.31		203.0	78.0
915	184.37	3.02	12.65		209.8	79.0
916	183.92	2.04	13.28		215.4	79.0
917	183.22	1.46	13.49		221.2	79.0
918	182.66	0.93	14.03		226.3	79.0
919	181.95	1.06	13.69		229.4	79.0
920	181.38	1.23	13.34		232.7	79.0
921	180.76	0.42	14.70		237.2	79.0
922	180.07	0.39	14.63		241.2	79.0
923	179.35	0.33	14.57		243.8	79.0
924	178.82	0.16	15.34		247.5	79.0
925	178.04	0.14	15.66		250.6	79.0
926	177.23	0.15	15.45		253.1	79.0
927	176.57	0.14	15.38		255.6	79.0
928	175.92	0.13	15.29		258.1	79.0
929	175.14	0.13	15.33		260.1	79.0
930	174.33	0.13	15.42		262.1	79.0
931	173.36	0.13	15.45		264.0	79.0
932	172.87	0.13	15.43		265.7	79.0
933	172.14	0.12	15.43		268.0	79.0
934	171.46	0.12	15.40		269.5	79.0
935	170.74	0.11	15.39		271.5	79.0
936	169.89	0.11	15.36		273.1	79.0
937	169.13	0.11	15.18		274.4	79.0
938	168.76	0.09	13.88		251.2	79.0
939	168.49	0.15	13.38		235.9	79.0
940	168.21	0.24	13.07		227.6	79.0
941	168.02	1.25	15.27		220.8	79.0
942	167.90	0.93	15.66		213.8	79.0
943	167.77	0.21	9.98		208.9	79.0
944	167.62	0.20	8.53		204.8	79.0
945	167.59	0.33	6.83		201.6	79.0

946	167.63	0.36	6.12		198.7	79.0
947	167.53	0.37	5.35		197.4	79.0
948	167.45	0.30	3.57		195.5	79.0
949	167.68	0.64	4.28		193.4	79.0
950	167.60	0.96	5.17		191.1	79.0
951	167.37	1.15	5.65		188.8	79.0
952	167.51	1.27	5.97		186.5	79.0
953	167.30	1.28	5.90		184.2	79.0
954	167.51	1.28	5.89		182.1	79.0
955	167.51	1.25	5.76		179.9	80.0
956	167.52	1.17	5.47		177.8	80.0
957	167.36	1.10	5.21		175.8	79.0
958	167.43	1.03	4.94		173.8	80.0
959	167.44	0.96	4.66		171.9	80.0
960	167.37	0.89	4.45		170.2	80.0
961	167.34	0.82	4.18		168.3	80.0
962	167.34	0.77	3.99		166.6	80.0
963	167.27	0.71	3.77		164.9	80.0
964	167.31	0.67	3.60		163.3	80.0
965	167.50	0.63	3.46		161.7	80.0
966	167.36	0.60	3.37		160.3	80.0
967	167.23	0.56	3.17		158.6	80.0
968	167.39	0.53	3.07		157.3	80.0
969	167.51	0.52	3.00		155.9	80.0
970	167.44	0.50	2.93		154.7	80.0
971	167.53	0.49	2.91		153.5	80.0
972	167.39	0.47	2.83		152.4	80.0
973	167.44	0.47	2.85		151.4	80.0
974	167.37	0.45	2.76		150.4	80.0
975	167.28	0.44	2.72		149.3	80.0
976	167.39	0.43	2.67		148.5	80.0
977	167.40	0.42	2.62		147.7	80.0
978	167.52	0.41	2.57		146.5	80.0
979	167.27	0.40	2.51		145.9	80.0
980	167.43	0.39	2.47		144.9	80.0
981	167.58	0.39	2.43		144.3	80.0
982	167.45	0.39	2.43		143.6	80.0
983	167.53	0.38	2.39		142.7	80.0
984	167.54	0.38	2.38		141.9	80.0
985	167.48	0.37	2.33		140.8	80.0
986	167.52	0.36	2.30		140.3	80.0
987	167.53	0.36	2.25		139.8	80.0

988	167.32	0.36	2.25		139.0	80.0
989	167.41	0.36	2.23		138.5	81.0
990	167.45	0.36	2.25		137.8	81.0
991	167.27	0.36	2.23		137.1	81.0
992	167.33	0.36	2.25		136.8	81.0
993	167.44	0.35	2.21		136.6	81.0
994	167.45	0.36	2.23		136.3	81.0
995	167.45	0.35	2.18		135.5	81.0
996	167.41	0.35	2.17		134.7	81.0
997	167.46	0.35	2.16		134.3	81.0
998	167.44	0.36	2.17		133.7	81.0
999	167.49	0.35	2.12		133.2	81.0
1000	167.57	0.35	2.12		132.8	81.0
1001	167.39	0.35	2.10		132.5	81.0
1002	167.58	0.34	2.06		131.6	81.0
1003	167.32	0.34	2.04		131.8	81.0
1004	167.55	0.33	2.01		130.8	81.0
1005	167.43	0.33	1.97		129.8	81.0
1006	167.46	0.33	1.95		129.7	81.0
1007	167.29	0.33	1.95		156.7	81.0
1008	166.95	0.79	4.21		152.5	81.0
1009	167.08	0.47	2.65		147.5	81.0
1010	166.98	0.44	2.45		143.7	81.0
1011	166.93	0.44	2.47		140.9	81.0
1012	166.97	0.42	2.38		138.6	81.0
1013	167.18	0.38	2.19		136.9	81.0
1014	167.06	0.34	2.02		134.9	81.0
1015	166.90	0.30	1.84		133.7	81.0
1016	167.08	0.27	1.68		132.3	81.0
1017	166.90	0.24	1.57		131.3	81.0
1018	167.12	0.22	1.45		130.9	81.0
1019	166.91	0.21	1.37		130.1	81.0
1020	167.10	0.19	1.29		129.2	81.0
1021	166.88	0.18	1.22		129.3	81.0
1022	166.97	0.17	1.17		128.0	81.0
1023	167.05	0.15	1.12		127.3	81.0
1024	167.06	0.14	1.06		126.6	81.0
1025	167.08	0.14	1.03		126.3	81.0
1026	166.94	0.13	1.00		125.9	82.0
1027	166.92	0.12	0.96		125.6	81.0
1028	166.96	0.12	0.93		124.9	81.0
1029	167.13	0.11	0.91		123.9	82.0

1030	166.94	0.11	0.89		123.6	82.0
1031	167.12	0.11	0.90		123.2	82.0
1032	166.99	0.11	0.89		123.7	82.0
1033	167.02	0.11	0.91		123.2	82.0
1034	166.93	0.10	0.89		123.2	82.0
1035	167.03	0.10	0.90		123.2	82.0
1036	167.09	0.10	0.89		122.8	82.0
1037	167.11	0.10	0.88		122.2	82.0
1038	166.89	0.11	0.95		147.4	82.0
1039	166.90	0.18	1.56		142.5	82.0
1040	166.70	0.12	1.02		138.1	82.0
1041	166.90	0.11	0.90		134.9	82.0
1042	166.87	0.12	0.95		132.2	82.0
1043	166.84	0.12	0.97		130.5	82.0
1044	166.66	0.11	0.96		129.2	82.0
1045	166.70	0.11	0.94		128.3	82.0
1046	166.73	0.10	0.92		127.1	82.0
1047	166.76	0.10	0.88		126.2	82.0
1048	166.71	0.09	0.85		126.0	82.0
1049	166.81	0.09	0.82		125.2	82.0
1050	166.83	0.08	0.78		124.6	82.0
1051	166.78	0.08	0.76		123.7	82.0
1052	166.70	0.07	0.73		123.2	82.0
1053	166.67	0.07	0.71		122.5	82.0
1054	166.75	0.07	0.69		122.3	82.0
1055	166.49	0.07	0.67		121.8	82.0
1056	166.79	0.06	0.66		121.6	82.0
1057	166.73	0.06	0.66		121.8	82.0
1058	166.90	0.06	0.64		121.6	82.0
1059	166.71	0.06	0.63		121.4	82.0
1060	166.80	0.06	0.64		121.2	82.0
1061	166.96	0.06	0.63		120.1	82.0
1062	166.67	0.06	0.62		119.6	82.0
1063	166.67	0.06	0.61		119.7	82.0
1064	166.74	0.06	0.60		119.1	82.0
1065	166.93	0.06	0.59		119.4	82.0
1066	166.84	0.06	0.59		119.5	82.0
1067	166.72	0.05	0.58		118.6	82.0
1068	166.70	0.05	0.57		118.3	82.0
1069	166.70	0.11	1.08		142.7	82.0
1070	166.77	0.10	1.23		137.5	82.0
1071	166.68	0.07	0.82		133.1	82.0

1072	166.53	0.06	0.69		130.0	82.0
1073	166.58	0.06	0.71		128.2	82.0
1074	166.63	0.06	0.72		126.8	82.0
1075	166.49	0.06	0.70		125.0	82.0
1076	166.56	0.06	0.67		123.9	82.0
1077	166.63	0.06	0.65		123.3	82.0
1078	166.57	0.05	0.64		122.0	82.0
1079	166.51	0.05	0.63		121.4	82.0
1080	166.55	0.05	0.61		121.2	82.0
1081	166.62	0.05	0.61		120.8	82.0
1082	166.51	0.05	0.60		120.3	82.0
1083	166.66	0.05	0.58		120.0	82.0
1084	166.47	0.05	0.58		119.4	82.0
1085	166.62	0.05	0.57		118.3	82.0
1086	166.44	0.05	0.56		118.1	83.0
1087	166.53	0.05	0.56		117.5	83.0
1088	166.45	0.05	0.55		117.8	82.0
1089	166.49	0.05	0.54		117.9	83.0
1090	166.55	0.05	0.54		117.8	82.0
1091	166.47	0.05	0.54		117.5	83.0
1092	166.50	0.05	0.54		117.1	82.0
1093	166.44	0.05	0.53		116.5	83.0
1094	166.57	0.05	0.52		116.6	83.0
1095	166.53	0.05	0.52		116.5	82.0
1096	166.60	0.05	0.52		116.6	83.0
1097	166.68	0.05	0.52		116.6	83.0
1098	166.59	0.05	0.52		115.8	83.0
1099	166.52	0.05	0.52		116.0	83.0
1100	166.63	0.21	1.97		138.2	83.0
1101	166.51	0.13	1.51		132.9	83.0
1102	166.26	0.09	1.09		129.0	83.0
1103	166.44	0.07	0.86		125.9	83.0
1104	166.41	0.06	0.79		124.0	83.0
1105	166.30	0.06	0.78		122.4	83.0
1106	166.51	0.06	0.78		121.3	83.0
1107	166.45	0.06	0.75		121.1	83.0
1108	166.44	0.06	0.72		120.1	83.0
1109	166.45	0.06	0.71		119.7	83.0
1110	166.50	0.06	0.70		119.3	83.0
1111	166.23	0.06	0.67		118.6	83.0
1112	166.34	0.06	0.67		118.0	83.0
1113	166.43	0.06	0.67		117.7	83.0

1114	166.20	0.06	0.67		117.1	83.0
1115	166.53	0.06	0.66		116.7	83.0
1116	166.21	0.06	0.65		116.3	83.0
1117	166.39	0.06	0.64		116.6	83.0
1118	166.44	0.06	0.65		116.6	83.0
1119	166.42	0.06	0.64		116.6	83.0
1120	166.45	0.06	0.65		115.8	83.0
1121	166.48	0.06	0.64		115.6	83.0
1122	166.47	0.06	0.63		115.3	83.0
1123	166.51	0.06	0.64		115.3	83.0
1124	166.36	0.06	0.63		114.7	83.0
1125	166.40	0.06	0.63		114.2	83.0
1126	166.35	0.06	0.64		114.5	83.0
1127	166.31	0.06	0.63		114.3	83.0
1128	166.53	0.06	0.64		114.7	83.0
1129	166.35	0.06	0.64		114.1	83.0
1130	166.45	0.06	0.64		119.5	83.0
1131	166.37	0.37	3.40		134.7	83.0
1132	166.20	0.18	1.92		133.7	83.0
1133	166.18	0.19	1.86		145.7	83.0
1134	166.07	0.40	1.44		152.6	83.0
1135	165.85	0.72	1.91		158.2	83.0
1136	165.47	1.17	2.95		163.6	83.0
1137	165.37	1.69	4.71		169.3	83.0
1138	164.82	2.10	6.18		175.0	83.0
1139	164.29	2.75	7.95		181.8	83.0
1140	163.67	3.02	10.66		187.9	83.0
1141	163.20	2.78	11.57		192.4	83.0
1142	162.54	2.82	12.61		196.9	83.0
1143	161.73	2.75	12.90		200.9	83.0
1144	161.17	2.60	12.65		204.7	83.0
1145	160.56	2.47	12.73		208.5	83.0
1146	159.98	2.38	12.80		212.1	83.0
1147	159.41	2.34	12.41		215.3	83.0
1148	158.73	2.21	12.43		218.3	83.0
1149	158.02	2.28	12.47		221.1	83.0
1150	157.36	2.01	12.85		223.3	83.0
1151	156.91	2.18	12.39		225.8	83.0
1152	156.26	2.09	12.18		227.2	83.0
1153	155.61	2.08	11.86		228.0	84.0
1154	155.00	2.01	11.66		228.6	83.0
1155	154.24	1.92	11.81		230.2	83.0

1156	153.63	2.02	11.87		232.3	83.0
1157	152.92	1.96	11.84		234.3	83.0
1158	152.36	1.95	11.59		235.9	83.0
1159	151.67	1.89	11.49		237.1	83.0
1160	150.97	1.84	11.57		238.5	83.0
1161	150.17	1.77	11.99		240.8	83.0
1162	149.57	1.68	11.91		243.0	83.0
1163	148.99	1.66	11.79		245.9	83.0
1164	148.24	1.64	11.77		248.0	83.0
1165	147.41	1.45	12.10		252.5	84.0
1166	146.83	0.56	13.35		255.6	84.0
1167	145.97	0.70	13.28		258.7	84.0
1168	145.37	0.43	13.68		262.7	84.0
1169	144.68	0.14	14.49		253.6	84.0
1170	144.39	0.41	14.42		235.7	84.0
1171	143.99	2.38	16.29		225.5	84.0
1172	143.68	3.50	15.89		219.1	84.0
1173	143.36	4.45	16.51		212.4	84.0
1174	143.41	1.31	12.86		207.0	84.0
1175	143.28	0.36	11.92		203.0	84.0
1176	143.02	0.28	10.66		199.7	84.0
1177	143.02	0.30	8.69		196.7	84.0
1178	142.95	0.35	7.41		194.6	84.0
1179	142.87	0.31	5.57		192.9	84.0
1180	142.91	0.51	4.61		191.1	84.0
1181	142.72	0.99	5.57		189.0	84.0
1182	142.88	1.34	6.30		187.0	84.0
1183	142.74	1.51	6.50		184.8	84.0
1184	142.85	1.64	6.68		182.7	84.0
1185	142.84	1.63	6.48		180.7	84.0
1186	142.76	1.63	6.38		178.7	84.0
1187	142.81	1.55	6.04		176.7	84.0
1188	142.82	1.49	5.83		174.8	84.0
1189	142.89	1.43	5.59		172.9	84.0
1190	142.73	1.35	5.28		171.1	84.0
1191	142.74	1.31	5.12		169.4	84.0
1192	142.77	1.26	4.94		167.8	84.0
1193	142.74	1.22	4.81		166.2	84.0
1194	142.72	1.20	4.73		164.8	84.0
1195	142.85	1.16	4.60		163.3	84.0
1196	142.70	1.13	4.47		161.9	84.0
1197	142.84	1.09	4.34		160.5	84.0

1198	142.73	1.05	4.20		159.1	84.0
1199	142.67	1.03	4.13		157.8	84.0
1200	142.84	0.98	3.98		156.6	84.0
1201	142.81	0.91	3.73		155.3	84.0
1202	142.69	0.86	3.56		154.5	84.0
1203	142.74	0.81	3.41		153.4	84.0
1204	142.69	0.76	3.24		152.3	84.0
1205	142.79	0.72	3.10		151.4	85.0
1206	142.75	0.68	2.95		150.6	84.0
1207	142.79	0.64	2.80		149.6	84.0
1208	142.79	0.61	2.71		148.9	84.0
1209	142.82	0.58	2.62		147.9	84.0
1210	142.75	0.55	2.51		147.3	84.0
1211	142.88	0.53	2.47		146.4	84.0
1212	142.85	0.51	2.37		145.8	84.0
1213	142.94	0.50	2.34		145.2	84.0
1214	142.78	0.49	2.29		144.0	84.0
1215	142.67	0.48	2.27		143.5	84.0
1216	142.89	0.47	2.24		142.9	84.0
1217	142.78	0.47	2.23		142.0	84.0
1218	142.84	0.46	2.20		141.8	84.0
1219	142.80	0.47	2.21		141.0	84.0
1220	142.72	0.46	2.19		140.3	84.0
1221	142.78	0.46	2.17		139.9	84.0
1222	142.83	0.47	2.18		139.4	84.0
1223	142.81	0.46	2.16		139.1	84.0
1224	142.88	0.46	2.15		138.5	84.0
1225	142.91	0.45	2.10		137.9	85.0
1226	142.87	0.45	2.11		136.9	84.0
1227	142.85	0.44	2.06		136.6	85.0
1228	142.84	0.44	2.04		136.2	84.0
1229	142.88	0.44	2.04		134.9	85.0
1230	142.83	0.44	2.02		134.8	84.0
1231	142.88	0.45	2.03		134.0	84.0
1232	142.92	0.44	2.01		133.6	84.0
1233	142.93	0.44	2.01		133.2	85.0
1234	142.81	0.44	2.01		132.3	84.0
1235	142.88	0.45	2.01		132.4	85.0
1236	142.89	0.45	2.01		132.3	85.0
1237	142.85	0.45	2.05		131.9	85.0
1238	142.74	0.45	2.03		151.5	85.0
1239	142.53	2.57	8.87		156.0	85.0

1240	142.40	0.76	3.31		150.6	85.0
1241	142.31	0.61	2.68		146.5	85.0
1242	142.39	0.64	2.75		143.7	85.0
1243	142.30	0.63	2.72		141.2	85.0
1244	142.18	0.57	2.53		139.5	85.0
1245	142.36	0.51	2.31		137.6	85.0
1246	142.29	0.45	2.07		136.2	85.0
1247	142.32	0.40	1.87		135.1	84.0
1248	142.38	0.36	1.68		133.9	85.0
1249	142.32	0.31	1.52		133.1	85.0
1250	142.37	0.28	1.40		131.9	85.0
1251	142.43	0.25	1.28		131.4	85.0
1252	142.31	0.23	1.20		130.9	85.0
1253	142.29	0.21	1.11		130.2	85.0
1254	142.31	0.20	1.04		129.4	85.0
1255	142.46	0.18	0.97		128.2	85.0
1256	142.31	0.17	0.93		127.7	85.0
1257	142.45	0.16	0.89		127.4	85.0
1258	142.33	0.15	0.87		127.2	85.0
1259	142.38	0.15	0.86		127.0	85.0
1260	142.55	0.14	0.85		126.7	85.0
1261	142.35	0.14	0.84		126.5	85.0
1262	142.41	0.14	0.82		126.0	85.0
1263	142.39	0.13	0.80		125.8	85.0
1264	142.44	0.13	0.81		125.6	85.0
1265	142.38	0.13	0.80		125.6	85.0
1266	142.44	0.12	0.80		125.1	85.0
1267	142.50	0.12	0.80		124.9	85.0
1268	142.34	0.12	0.78		125.1	85.0
1269	142.39	0.12	0.79		147.4	85.0
1270	142.09	0.44	2.60		146.9	85.0
1271	142.28	0.24	1.40		142.0	85.0
1272	142.15	0.19	1.11		138.4	85.0
1273	141.93	0.20	1.15		135.9	85.0
1274	141.95	0.19	1.15		133.9	85.0
1275	142.20	0.19	1.12		132.6	85.0
1276	142.02	0.00	0.08		131.6	85.0
1277	142.05	0.16	1.08		130.2	85.0
1278	142.06	0.01	0.16		129.6	85.0
1279	142.06	0.00	0.09		128.9	85.0
1280	142.13	0.13	0.86		127.5	85.0
1281	142.13	0.12	0.78		126.5	85.0

1282	142.18	0.11	0.74		126.1	85.0
1283	142.11	0.10	0.70		125.1	85.0
1284	142.05	0.10	0.67		124.9	85.0
1285	142.19	0.09	0.64		124.0	85.0
1286	142.01	0.09	0.62		123.6	85.0
1287	141.97	0.08	0.58		123.9	85.0
1288	142.09	0.08	0.58		123.5	85.0
1289	142.15	0.07	0.54		122.8	85.0
1290	142.12	0.07	0.54		123.2	85.0
1291	142.14	0.07	0.52		122.6	85.0
1292	142.15	0.07	0.51		122.4	85.0
1293	142.07	0.07	0.50		122.0	85.0
1294	142.17	0.06	0.48		121.9	85.0
1295	142.12	0.06	0.48		121.7	85.0
1296	142.09	0.06	0.47		121.6	85.0
1297	142.21	0.06	0.47		121.1	85.0
1298	142.09	0.06	0.45		121.1	85.0
1299	142.09	0.06	0.45		120.6	85.0
1300	141.93	0.06	0.44		143.3	85.0
1301	141.93	0.19	1.69		141.4	85.0
1302	142.01	0.12	1.02		136.8	85.0
1303	141.92	0.09	0.73		133.8	86.0
1304	141.87	0.09	0.73		131.5	86.0
1305	141.92	0.09	0.74		129.5	85.0
1306	141.88	0.09	0.72		127.8	86.0
1307	141.72	0.08	0.69		126.6	85.0
1308	141.87	0.08	0.65		125.6	86.0
1309	141.99	0.07	0.61		124.6	85.0
1310	141.96	0.07	0.59		123.4	85.0
1311	141.88	0.07	0.56		123.2	86.0
1312	141.87	0.06	0.54		122.9	86.0
1313	141.81	0.06	0.52		122.5	86.0
1314	141.86	0.06	0.50		122.2	86.0
1315	141.96	0.06	0.49		121.8	86.0
1316	141.78	0.05	0.47		121.0	86.0
1317	141.89	0.05	0.45		121.1	86.0
1318	141.82	0.05	0.45		121.3	85.0
1319	141.78	0.05	0.43		120.6	86.0
1320	141.82	0.05	0.43		120.4	86.0
1321	141.78	0.05	0.42		119.9	86.0
1322	141.81	0.05	0.41		119.3	85.0
1323	141.90	0.04	0.40		119.1	86.0

1324	141.89	0.04	0.4		118.822	86
1325	141.86	0.04	0.38		118.485	86
1326	141.75	0.04	0.39		118.485	86
1327	141.96	0.04	0.38		118.67	86
1328	141.86	0.04	0.38		117.87	86
1329	141.93	0.04	0.37		117.653	86
1330	141.88	0.04	0.38		117.751	86
1331	141.88	0.04	0.38		138.578	86
1332	141.62	0.16	1.34		136.685	86
1333	141.83	0.13	0.93		132.678	86
1334	141.75	0.1	0.71		129.557	86
1335	141.69	0.09	0.66		126.86	86
1336	141.63	0.09	0.64		125.256	86
1337	141.63	0.09	0.63		124.291	86
1338	141.83	0.08	0.61		123.135	86
1339	141.68	0.08	0.58		122.318	86
1340	141.73	0.07	0.55		121.823	86
1341	141.61	0.07	0.53		121.067	86
1342	141.78	0.06	0.51		120.639	86
1343	141.74	0.06	0.48		119.847	86
1344	141.72	0.06	0.47		119.523	86
1345	141.77	0.06	0.45		119.101	86
1346	141.57	0.05	0.44		118.894	86
1347	141.73	0.05	0.43		118.257	86
1348	141.81	0.05	0.42		118.139	86
1349	141.67	0.05	0.42		118.134	86
1350	141.65	0.05	0.41		117.527	86
1351	141.69	0.05	0.4		117.081	86
1352	141.53	0.05	0.4		133.575	86
1353	141.52	0.23	1.6		143.937	86
1354	141.43	0.39	1.03		151.236	86
1355	141.42	0.32	0.98		155.348	86
1356	141.45	0.34	1.1		158.002	86
1357	141.13	0.3	1.25		160.103	86
1358	141.09	0.39	1.66		162.454	86
1359	140.96	0.55	2.26		165.378	86
1360	140.84	0.83	3.19		168.435	86
1361	140.64	0.99	3.87		171.536	86
1362	140.24	1.28	4.81		175.618	86
1363	139.91	2.1	7.88		181.285	86
1364	139.25	2.19	9.84		187.884	86
1365	138.78	2.23	12.35		192.536	86

1366	138.36	2.03	14.1		198.993	86
1367	137.50	1.1	14.92		210.147	86
1368	136.79	0.39	15.07		219.543	86
1369	136.42	0.44	14.02		225.865	86
1370	135.67	0.24	14.29		231.164	86
1371	135.00	0.26	14.3		235.846	86
1372	134.42	0.15	14.56		241.168	86
1373	133.56	0.12	17		248.83	86
1374	132.53	0.1	16.85		253.847	86
1375	132.01	0.11	16.4		256.889	86
1376	131.11	0.11	16.26		258.975	86
1377	130.36	0.12	16.1		260.929	86
1378	129.53	0.12	16.1		262.592	86
1379	128.73	0.13	16.13		263.833	86
1380	127.79	0.14	17.64		267.791	86
1381	126.98	0.15	17.74		270.663	86
1382	125.95	0.16	17.79		273.334	86
1383	125.10	0.17	18		276.232	86
1384	124.27	0.17	17.93		276.708	86
1385	123.40	0.16	17.66		277.443	86
1386	122.52	0.16	17.79		278.342	86
1387	122.03	0.15	17.47		279.557	86
1388	121.10	0.14	17.58		267.043	86
1389	120.66	3.64	16.35		247.044	86
1390	120.31	5.2	16.57		236.959	86
1391	119.88	5.2	15.72		230.608	86
1392	119.78	5.2	16.7		221.606	86
1393	119.54	1.59	16.44		214.032	86
1394	119.30	0.83	15.44		208.876	86
1395	119.07	0.43	13.87		205.264	86
1396	119.01	0.36	12.98		202.136	86
1397	119.04	0.28	12.14		200.331	86
1398	118.81	0.33	8.94		199.014	86
1399	118.82	1.71	9.94		197.249	87
1400	118.64	2.9	11.22		195.089	87
1401	118.60	3.62	11.89		192.976	86
1402	118.45	3.88	11.82		190.679	86
1403	118.50	3.92	11.48		188.511	86
1404	118.43	3.81	10.95		186.273	86
1405	118.47	3.77	10.67		184.244	86
1406	118.43	3.47	9.84		182.238	86
1407	118.46	3.36	9.49		180.333	86

1408	118.29	3.13	8.86		178.389	86
1409	118.40	2.96	8.41		176.643	86
1410	118.37	2.85	8.08		174.949	86
1411	118.18	2.7	7.71		173.164	86
1412	118.23	2.57	7.38		171.507	86
1413	118.21	2.45	7.09		169.875	86
1414	118.01	2.31	6.71		168.37	86
1415	118.14	2.16	6.32		167.02	86
1416	118.11	2.08	6.13		165.541	86
1417	118.25	1.9	5.67		164.066	86
1418	118.20	1.78	5.36		162.725	86
1419	118.18	1.67	5.07		161.341	86
1420	118.10	1.54	4.75		160.122	87
1421	118.05	1.45	4.52		158.86	86
1422	118.07	1.34	4.24		157.638	87
1423	118.20	1.28	4.06		156.578	86
1424	118.10	1.22	3.9		155.484	86
1425	118.20	1.16	3.72		154.56	86
1426	118.26	1.11	3.58		153.6	86
1427	118.13	1.06	3.46		152.864	87
1428	118.30	1.02	3.32		151.986	86
1429	118.06	0.98	3.21		151.182	86
1430	118.00	0.95	3.11		150.26	86
1431	118.17	0.92	3.03		149.541	86
1432	118.31	0.9	2.98		148.641	86
1433	118.28	0.87	2.89		148.132	86
1434	118.05	0.85	2.84		147.315	87
1435	118.14	0.84	2.79		146.782	86
1436	118.14	0.82	2.75		145.972	86
1437	118.34	0.81	2.68		145.471	87
1438	118.05	0.79	2.64		144.562	86
1439	118.07	0.77	2.57		143.899	87
1440	118.30	0.76	2.53		143.625	87
1441	118.22	0.74	2.46		143.232	87
1442	118.05	0.75	2.49		142.553	86
1443	118.26	0.73	2.42		142.28	86
1444	118.23	0.73	2.4		141.55	86
1445	118.22	0.72	2.36		141.019	86
1446	118.21	0.69	2.27		140.49	87
1447	118.16	0.69	2.26		139.884	87
1448	118.19	0.68	2.21		138.917	86
1449	118.12	0.67	2.18		139.026	87

1450	118.38	0.66	2.15		138.408	86
1451	118.18	0.65	2.1		137.756	86
1452	118.23	0.64	2.06		137.452	87
1453	118.31	0.64	2.05		136.627	87
1454	118.20	0.64	2.05		136.343	87
1455	118.11	0.63	2.03		136.018	87
1456	118.22	0.64	2.04		135.289	86
1457	118.09	0.64	2.03		157.273	87
1458	117.88	2.39	6.93		158.357	86
1459	117.80	0.91	3.27		152.629	87
1460	117.81	0.89	3.05		149.015	87
1461	117.70	0.99	3.38		146.233	87
1462	117.67	0.98	3.36		144.364	87
1463	117.66	0.93	3.21		142.935	87
1464	117.54	0.85	2.96		141.432	87
1465	117.66	0.75	2.64		139.791	87
1466	117.71	0.67	2.38		138.682	86
1467	117.59	0.59	2.13		137.439	87
1468	117.62	0.53	1.92		136.262	86
1469	117.71	0.48	1.75		135.66	86
1470	117.69	0.43	1.59		135.18	87
1471	117.85	0.39	1.46		134.352	86
1472	117.68	0.36	1.37		133.847	87
1473	117.95	0.33	1.26		133.104	87
1474	117.71	0.3	1.16		132.326	87
1475	117.71	0.27	1.07		131.704	87
1476	117.66	0.25	1.01		131.385	87
1477	117.61	0.24	0.96		130.594	87
1478	117.72	0.23	0.93		130.534	87
1479	117.85	0.22	0.89		129.89	87
1480	117.81	0.21	0.86		129.484	87
1481	117.75	0.21	0.85		129.075	87
1482	117.81	0.2	0.82		129.129	86
1483	117.69	0.19	0.8		129.042	87
1484	117.84	0.19	0.78		128.82	87
1485	117.76	0.18	0.77		129.059	87
1486	117.75	0.18	0.74		128.596	87
1487	117.67	0.17	0.73		128.828	87
1488	117.60	0.17	0.72		150.085	87
1489	117.44	0.49	2.2		149.688	87
1490	117.55	0.24	1.19		144.297	86
1491	117.60	0.2	0.96		140.587	87

1492	117.56	0.21	1.03		138.16	87
1493	117.53	0.23	1.07		136.387	87
1494	117.49	0.22	1.06		134.868	87
1495	117.49	0.21	1.03		133.773	86
1496	117.40	0.2	0.97		133.257	87
1497	117.59	0.19	0.92		132.208	87
1498	117.53	0.18	0.86		131.252	86
1499	117.46	0.16	0.79		130.113	86
1500	117.44	0.15	0.74		129.362	86
1501	117.50	0.14	0.7		128.862	87
1502	117.44	0.13	0.66		127.879	87
1503	117.56	0.13	0.64		128.04	86
1504	117.52	0.12	0.61		127.443	86
1505	117.51	0.11	0.58		127.206	87
1506	117.28	0.11	0.56		127.012	87
1507	117.39	0.1	0.53		126.747	86
1508	117.40	0.1	0.51		126.611	87
1509	117.44	0.09	0.5		126.218	86
1510	117.49	0.09	0.48		125.973	87
1511	117.57	0.09	0.46		125.241	86
1512	117.52	0.08	0.45		125.024	86
1513	117.38	0.08	0.44		124.993	86
1514	117.53	0.08	0.43		124.559	86
1515	117.69	0.07	0.41		124.726	86
1516	117.56	0.07	0.4		124.827	86
1517	117.47	0.07	0.39		123.912	86
1518	117.65	0.07	0.39		124.06	87
1519	117.45	0.06	0.38		144.313	86
1520	117.35	0.2	1.33		143.936	86
1521	117.44	0.12	0.84		138.863	86
1522	117.44	0.09	0.65		134.953	86
1523	117.46	0.1	0.64		132.533	86
1524	117.42	0.1	0.63		130.723	86
1525	117.41	0.09	0.6		129.276	86
1526	117.42	0.09	0.57		128.444	86
1527	117.39	0.08	0.55		127.586	86
1528	117.36	0.08	0.53		126.943	86
1529	117.38	0.07	0.51		126.046	86
1530	117.41	0.07	0.49		126.143	86
1531	117.36	0.07	0.48		125.479	86
1532	117.34	0.07	0.46		125.053	86
1533	117.43	0.07	0.45		124.845	86

1534	117.43	0.06	0.43		124.326	86
1535	117.27	0.06	0.42		124.159	86
1536	117.28	0.06	0.4		124.261	86
1537	117.31	0.06	0.39		123.611	86
1538	117.37	0.05	0.38		123.197	86
1539	117.46	0.05	0.37		122.952	86
1540	117.29	0.05	0.36		122.672	86
1541	117.33	0.05	0.34		122.382	86
1542	117.32	0.05	0.34		121.348	86
1543	117.38	0.05	0.33		120.809	86
1544	117.36	0.05	0.32		120.93	86
1545	117.35	0.04	0.32		120.497	86
1546	117.42	0.04	0.31		120.707	86
1547	117.46	0.04	0.31		120.881	86
1548	117.34	0.04	0.3		120.101	86
1549	117.50	0.04	0.29		120.25	86
1550	117.42	0.04	0.29		139.867	86
1551	117.42	0.13	0.91		138.781	86
1552	117.22	0.09	0.66		133.966	86
1553	117.27	0.07	0.51		130.483	86
1554	117.22	0.06	0.47		128.435	86
1555	117.40	0.06	0.45		126.906	86
1556	117.37	0.06	0.45		125.821	86
1557	117.35	0.06	0.43		124.7	86
1558	117.25	0.06	0.42		124.137	86
1559	117.28	0.05	0.41		123.141	86
1560	117.14	0.05	0.4		122.456	86
1561	117.33	0.05	0.38		122.466	86
1562	117.41	0.05	0.37		121.963	86
1563	117.19	0.05	0.36		121.174	86
1564	117.29	0.05	0.36		121.271	86
1565	117.21	0.05	0.35		120.606	86
1566	117.25	0.05	0.34		119.947	86
1567	117.31	0.04	0.33		120.127	86
1568	117.41	0.04	0.33		119.329	86
1569	117.34	0.04	0.32		119.351	86
1570	117.28	0.04	0.32		119.571	86
1571	117.22	0.04	0.31		119.634	86
1572	117.46	0.04	0.31		119.355	86
1573	117.27	0.04	0.31		119.032	86
1574	117.28	0.04	0.3		118.601	86
1575	117.17	0.04	0.3		118.718	86

1576	117.35	0.04	0.3		118.299	86
1577	117.28	0.04	0.29		118.053	86
1578	117.35	0.04	0.29		117.631	86
1579	117.21	0.04	0.29		117.353	86
1580	117.27	0.04	0.28		116.976	86
1581	117.36	0.04	0.28		136.223	86
1582	117.23	0.15	0.95		133.82	86
1583	117.30	0.11	0.73		129.289	86
1584	117.15	0.08	0.55		126.861	86
1585	117.24	0.07	0.5		124.988	86
1586	117.33	0.07	0.48		123.578	86
1587	117.26	0.07	0.47		122.339	86
1588	117.22	0.06	0.45		121.564	86
1589	117.23	0.06	0.43		120.819	86
1590	117.12	0.06	0.42		120.437	86
1591	117.22	0.06	0.4		119.535	86
1592	117.23	0.06	0.39		119.014	86
1593	117.06	0.05	0.38		118.926	86
1594	117.22	0.05	0.37		117.87	86
1595	117.39	0.05	0.36		117.35	86
1596	117.17	0.05	0.35		117.297	86
1597	117.24	0.05	0.35		133.208	86
1598	117.07	0.15	0.9		144.811	86
1599	117.16	0.05	0.36		150.136	86
1600	117.11	0.04	0.29		152.617	86
1601	117.08	0.05	0.31		154.037	86
1602	117.12	0.06	0.36		155.029	86
1603	117.11	0.07	0.43		155.586	86
1604	116.97	0.11	0.54		156.036	86
1605	116.86	0.18	0.78		156.454	86
1606	116.89	0.24	1.05		156.818	86
1607	116.73	0.23	1.26		157.32	86
1608	116.63	0.34	1.73		158.164	86
1609	116.39	0.65	2.56		160.014	86
1610	116.08	0.98	3.89		162.531	86
1611	115.77	1.16	5.1		165.305	86
1612	115.41	1.23	6.17		168.358	86
1613	114.84	1.58	7.47		172.523	86
1614	114.30	2.08	9.06		178.909	86
1615	113.76	2.06	12.66		188.621	86
1616	113.09	2.11	15.13		197.82	86
1617	112.57	1.04	15.94		208.631	86

1618	111.90	0.38	15.66		218.818	86
1619	111.11	0.25	15.64		227.603	86
1620	110.46	0.16	15.93		234.695	86
1621	109.71	0.14	16.03		241	86
1622	108.93	0.14	16.36		246.517	86
1623	108.19	0.14	16.87		251.63	86
1624	107.41	0.15	17.24		256.265	86
1625	106.60	0.15	17.22		259.555	86
1626	105.95	0.15	16.99		261.945	86
1627	104.97	0.14	16.85		264.359	86
1628	104.24	0.15	16.97		266.77	86
1629	103.39	0.16	17.13		269.008	86
1630	102.52	0.15	17.37		271.881	86
1631	101.67	0.15	17.47		274.046	86
1632	101.08	0.15	17.26		275.772	86
1633	100.18	0.15	17.3		277.42	86
1634	99.39	0.14	17.22		277.974	86
1635	98.64	0.14	16.9		279.453	86
1636	97.66	0.14	17.11		281.118	86
1637	96.97	0.14	16.94		281.151	86
1638	96.49	0.12	16.33		262.188	86
1639	96.05	0.26	17.11		244.52	86
1640	95.72	0.73	17.81		233.695	86
1641	95.46	4.72	17.03		225.582	86
1642	95.10	4.39	17.89		218.534	85
1643	94.96	1.13	16.16		213.218	86
1644	94.74	0.62	15.31		208.785	86
1645	94.79	0.26	13.64		205.396	86
1646	94.59	0.25	12.85		202.305	86
1647	94.54	0.18	11.88		200.745	86
1648	94.30	0.55	8.78		199.426	86
1649	94.26	2.27	10.87		197.624	86
1650	94.11	3.25	11.56		195.42	86
1651	94.13	3.71	11.81		193.078	86
1652	93.97	3.93	11.84		190.631	86
1653	94.02	3.8	11.27		188.334	86
1654	93.98	3.66	10.73		186.141	86
1655	93.88	3.43	10.05		183.91	86
1656	93.76	3.23	9.46		181.872	86
1657	93.76	3.05	8.98		179.726	86
1658	93.76	2.82	8.33		177.791	86
1659	93.75	2.65	7.89		175.857	85

1660	93.80	2.45	7.38		173.896	86
1661	93.78	2.31	7		172.178	86
1662	93.68	2.17	6.64		170.556	86
1663	93.84	2.02	6.24		168.971	85
1664	93.75	1.92	5.97		167.418	86
1665	93.73	1.82	5.69		165.87	86
1666	93.74	1.74	5.45		164.365	85
1667	93.77	1.64	5.18		162.902	85
1668	93.72	1.57	4.98		161.527	85
1669	93.61	1.5	4.79		160.195	85
1670	93.82	1.44	4.61		158.876	85
1671	93.57	1.39	4.45		157.643	85
1672	93.62	1.36	4.33		156.457	85
1673	93.63	1.33	4.25		155.416	86
1674	93.56	1.32	4.2		154.527	85
1675	93.65	1.3	4.12		153.474	85
1676	93.58	1.27	4.02		152.57	85
1677	93.66	1.28	4.04		151.677	85
1678	93.62	1.27	3.99		150.865	85
1679	93.74	1.26	3.94		149.811	85
1680	93.59	1.25	3.89		148.997	85
1681	93.50	1.23	3.82		148.204	85
1682	93.57	1.24	3.82		147.502	85
1683	93.59	1.23	3.8		146.895	85
1684	93.61	1.2	3.67		146.016	85
1685	93.58	1.17	3.58		145.299	85
1686	93.50	1.16	3.51		144.76	85
1687	93.57	1.13	3.41		144.216	85
1688	93.46	1.13	3.37		143.655	85
1689	93.55	1.09	3.25		142.794	85
1690	93.50	1.06	3.13		142.13	85
1691	93.62	1.04	3.07		141.534	85
1692	93.54	1.01	2.96		140.847	85
1693	93.63	0.97	2.84		140.198	85
1694	93.57	0.95	2.77		139.608	85
1695	93.56	0.92	2.67		139.163	85
1696	93.60	0.89	2.59		138.949	85
1697	93.61	0.87	2.51		137.989	85
1698	93.61	0.85	2.45		136.869	85
1699	93.57	0.84	2.4		136.655	85
1700	93.56	0.81	2.33		136.271	85
1701	93.57	0.8	2.29		136.633	85

1702	93.60	0.78	2.25		135.902	85
1703	93.53	0.78	2.22		135.377	85
1704	93.73	0.76	2.18		134.253	85
1705	93.45	0.75	2.13		133.554	85
1706	93.97	0.72	2.04		133.34	85
1707	93.57	0.71	2.01		158.363	85
1708	93.15	2.14	7.22		156.663	85
1709	93.14	1.21	4.63		151.484	85
1710	93.09	1.13	4.29		147.956	85
1711	92.98	1.16	4.36		145.164	85
1712	93.06	1.11	4.19		143.281	85
1713	93.07	1.02	3.89		141.559	85
1714	93.00	0.91	3.47		139.862	85
1715	93.04	0.8	3.07		138.25	85
1716	93.02	0.71	2.75		136.882	85
1717	93.01	0.63	2.45		135.746	85
1718	93.00	0.56	2.2		134.57	85
1719	93.08	0.5	1.98		133.718	85
1720	93.16	0.45	1.79		132.61	85
1721	93.13	0.41	1.63		131.882	85
1722	93.20	0.37	1.49		131.027	85
1723	93.03	0.34	1.37		130.548	85
1724	93.13	0.31	1.27		129.901	85
1725	93.02	0.29	1.18		129.428	85
1726	93.06	0.27	1.1		128.82	85
1727	93.06	0.25	1.04		128.255	85
1728	93.03	0.24	0.99		127.744	85
1729	93.18	0.23	0.93		127.13	85
1730	93.09	0.22	0.91		126.795	85
1731	93.04	0.21	0.86		126.234	85
1732	93.14	0.2	0.85		126.339	85
1733	93.00	0.19	0.81		125.97	85
1734	93.12	0.19	0.8		126.1	85
1735	93.06	0.18	0.78		125.45	85
1736	93.03	0.18	0.77		125.174	85
1737	93.26	0.18	0.76		124.733	85
1738	93.02	0.17	0.75		148.745	85
1739	93.08	0.58	3.03		146.611	84
1740	93.02	0.41	2.16		141.302	85
1741	92.87	0.35	1.79		138.033	85
1742	92.86	0.36	1.83		135.471	85
1743	93.00	0.35	1.81		133.871	84

1744	92.91	0.34	1.77		132.378	84
1745	92.92	0.31	1.66		131.096	84
1746	92.91	0.29	1.57		130.372	84
1747	92.92	0.26	1.46		129.137	84
1748	92.79	0.24	1.37		128.462	84
1749	92.88	0.23	1.28		127.365	84
1750	92.89	0.21	1.19		126.545	84
1751	92.86	0.2	1.13		125.885	84
1752	92.85	0.18	1.07		125.553	84
1753	92.84	0.17	1.02		124.919	84
1754	92.90	0.17	0.98		125.045	84
1755	92.86	0.16	0.95		124.251	84
1756	92.86	0.15	0.91		123.469	84
1757	92.93	0.14	0.88		122.881	84
1758	92.88	0.14	0.86		122.74	84
1759	92.92	0.13	0.82		122.04	84
1760	92.91	0.13	0.8		122.503	84
1761	92.81	0.12	0.78		122.76	84
1762	92.80	0.12	0.76		121.615	84
1763	92.81	0.12	0.74		121.122	84
1764	93.03	0.11	0.71		121.231	84
1765	92.88	0.11	0.7		120.672	84
1766	92.85	0.1	0.69		120.176	84
1767	92.87	0.1	0.67		120.289	84
1768	93.03	0.1	0.65		119.588	84
1769	93.08	0.1	0.67		142.303	84
1770	92.82	0.21	1.83		139.552	84
1771	92.75	0.15	1.32		135.112	84
1772	92.82	0.11	1.03		131.821	84
1773	92.85	0.12	1.01		129.304	84
1774	92.75	0.12	0.99		127.551	84
1775	92.86	0.11	0.96		126.055	84
1776	92.76	0.11	0.92		125.275	84
1777	92.79	0.1	0.89		124.145	84
1778	92.72	0.1	0.87		123.662	84
1779	92.79	0.1	0.86		122.896	84
1780	92.71	0.1	0.84		122.314	84
1781	92.72	0.09	0.82		122.16	84
1782	92.84	0.09	0.79		121.787	84
1783	92.66	0.09	0.78		121.397	84
1784	92.99	0.08	0.76		120.36	84
1785	92.76	0.08	0.75		120.188	84

1786	92.81	0.08	0.74		119.92	84
1787	92.73	0.08	0.73		119.689	84
1788	92.76	0.08	0.71		119.133	84
1789	92.84	0.08	0.71		118.721	84
1790	92.90	0.08	0.71		118.436	84
1791	92.78	0.08	0.71		118.979	84
1792	92.81	0.07	0.69		118.597	84
1793	92.83	0.07	0.69		117.925	84
1794	92.73	0.07	0.69		117.62	84
1795	92.77	0.07	0.67		117.629	84
1796	92.79	0.07	0.68		117.497	84
1797	92.75	0.07	0.67		117.333	84
1798	92.85	0.07	0.67		117.182	84
1799	92.76	0.07	0.66		116.454	83
1800	92.85	0.13	1.08		138.832	84
1801	92.62	0.17	1.79		134.532	84
1802	92.75	0.13	1.37		130.148	84
1803	92.80	0.09	1.02		127.086	84
1804	92.86	0.08	0.92		124.498	84
1805	92.86	0.08	0.9		123.228	84
1806	92.82	0.08	0.89		122.003	84
1807	92.85	0.08	0.87		121.661	84
1808	92.71	0.08	0.85		120.968	84
1809	92.79	0.08	0.84		120.013	84
1810	92.75	0.08	0.84		119.102	84
1811	92.74	0.08	0.83		118.895	84
1812	92.68	0.08	0.82		118.924	84
1813	92.64	0.08	0.82		118.099	83
1814	92.71	0.08	0.82		117.972	84
1815	92.78	0.08	0.82		117.629	84
1816	92.75	0.08	0.82		117.498	83
1817	92.76	0.08	0.83		116.629	83
1818	92.70	0.08	0.83		116.462	83
1819	92.86	0.08	0.83		116.108	83
1820	92.75	0.08	0.82		115.684	83
1821	92.75	0.08	0.82		115.409	83
1822	92.74	0.08	0.8		115.371	83
1823	92.82	0.08	0.82		115.145	83
1824	92.67	0.08	0.8		115.267	83
1825	92.66	0.08	0.8		114.872	83
1826	92.69	0.08	0.8		114.925	83
1827	92.65	0.08	0.78		113.917	83

1828	92.80	0.08	0.77		114.142	83
1829	92.73	0.08	0.78		114.236	83
1830	92.70	0.08	0.78		114.29	83
1831	92.69	0.28	2.46		136.034	83
1832	92.64	0.19	2.07		130.263	83
1833	92.49	0.19	2.12		143.939	83
1834	92.45	0.65	2.1		152.587	83
1835	92.19	1.51	2.89		159.455	83
1836	92.05	2.09	4.85		166.421	83
1837	91.50	2.91	7.71		174.289	83
1838	90.99	3.45	11.15		182.67	83
1839	90.68	3.2	13.48		190.486	83
1840	90.03	1.66	15.37		201.511	83
1841	89.44	0.91	15.39		213.78	83
1842	88.76	0.19	15.82		224.422	83
1843	88.13	0.12	15.61		231.647	83
1844	87.40	0.12	16.55		239.712	83
1845	87.05	0.12	16.4		245.454	83
1846	86.18	0.12	16.71		250.397	83
1847	85.40	0.13	16.89		254.003	83
1848	84.79	0.12	16.33		256.653	83
1849	84.31	0.11	16.2		258.981	83
1850	83.49	0.12	16.25		260.75	83
1851	82.79	0.11	16.12		262.576	83
1852	82.29	0.11	15.94		263.882	83
1853	81.34	0.11	16.24		265.994	83
1854	80.82	0.11	16.19		267.584	83
1855	80.15	0.11	16.24		268.215	83
1856	79.43	0.11	16.3		268.699	83
1857	78.69	0.1	16.17		265.856	83
1858	78.25	0.1	16.16		265.465	83
1859	77.39	0.1	16.57		267.089	83
1860	76.81	0.09	16.48		268.224	83
1861	76.31	0.09	16.56		271.746	83
1862	75.68	0.09	15.25		252.502	83
1863	75.47	2.67	16.63		236.78	83
1864	75.11	4.08	15.71		229.22	83
1865	74.85	5.2	15.07		222.919	83
1866	74.61	5.2	18.94		213.88	83
1867	74.42	1.54	15.93		207.958	83
1868	74.21	1.14	15.14		203.559	83
1869	74.00	0.84	14.2		200.403	83

1870	73.78	0.93	13.79		197.53	83
1871	73.72	0.74	12.9		195.967	83
1872	73.61	1.55	10.91		194.442	83
1873	73.64	3.55	12.88		192.416	83
1874	73.37	4.58	13.53		190.177	83
1875	73.37	4.92	13.45		187.764	83
1876	73.32	4.9	12.94		185.325	83
1877	73.25	4.71	12.27		183.117	83
1878	73.19	4.56	11.83		180.917	83
1879	73.15	4.32	11.28		178.747	83
1880	73.11	4.09	10.74		176.831	83
1881	72.95	3.93	10.39		175.011	83
1882	72.97	3.73	9.93		173.226	83
1883	72.95	3.54	9.57		171.589	83
1884	72.95	3.41	9.32		169.772	83
1885	72.97	3.18	8.77		168.192	83
1886	72.79	3.07	8.52		166.641	83
1887	72.90	2.99	8.34		165.229	83
1888	72.86	2.89	8.09		163.756	83
1889	72.73	2.8	7.86		162.401	83
1890	72.92	2.69	7.61		160.868	83
1891	72.73	2.56	7.31		159.551	83
1892	72.80	2.46	7.06		158.263	83
1893	72.77	2.44	6.99		157.032	83
1894	72.82	2.36	6.8		155.815	83
1895	72.76	2.25	6.52		154.586	83
1896	72.76	2.17	6.32		153.403	83
1897	72.74	2.11	6.14		152.498	83
1898	72.86	2.05	5.98		151.482	83
1899	72.86	1.97	5.78		150.411	83
1900	72.72	1.9	5.6		149.51	83
1901	72.58	1.84	5.42		148.69	83
1902	72.79	1.77	5.23		147.621	83
1903	72.72	1.73	5.14		146.849	83
1904	72.71	1.7	5.04		145.951	83
1905	72.72	1.65	4.92		145.225	83
1906	72.74	1.62	4.85		144.301	83
1907	72.60	1.57	4.72		143.617	83
1908	72.79	1.54	4.65		142.813	83
1909	72.67	1.52	4.59		142.192	83
1910	72.71	1.48	4.5		141.565	82
1911	72.75	1.44	4.37		141.037	83

1912	72.75	1.43	4.34		140.464	83
1913	72.70	1.41	4.28		139.888	83
1914	72.82	1.38	4.21		139.281	83
1915	72.74	1.35	4.13		138.687	83
1916	72.77	1.32	4.04		138.201	83
1917	72.67	1.32	4.02		137.494	83
1918	72.68	1.3	4		137.203	83
1919	72.85	1.3	3.98		136.451	83
1920	72.83	1.29	3.97		136.144	83
1921	72.65	1.25	3.86		135.647	83
1922	72.66	1.25	3.87		135.18	83
1923	72.77	1.24	3.84		134.813	83
1924	72.61	1.21	3.76		134.126	82
1925	72.75	1.19	3.7		133.697	82
1926	72.76	1.19	3.69		133.446	82
1927	72.78	1.17	3.63		132.889	82
1928	72.74	1.16	3.6		132.586	82
1929	72.65	1.15	3.57		131.957	82
1930	72.72	1.12	3.5		131.963	82
1931	72.44	1.13	3.57		155.818	82
1932	72.36	1.83	7.07		153.166	82
1933	72.45	1.19	4.92		148.105	82
1934	72.42	1.11	4.54		144.481	82
1935	72.27	1.11	4.51		142.016	82
1936	72.39	1.05	4.3		140.084	82
1937	72.25	0.97	4		138.315	82
1938	72.26	0.88	3.65		137.09	82
1939	72.18	0.79	3.32		135.772	82
1940	72.29	0.72	3.03		134.75	82
1941	72.36	0.65	2.77		133.47	82
1942	72.29	0.6	2.57		132.745	82
1943	72.29	0.55	2.38		131.908	82
1944	72.29	0.51	2.25		131.201	82
1945	72.37	0.48	2.14		130.657	82
1946	72.47	0.45	2.03		129.726	82
1947	72.38	0.43	1.97		129.02	82
1948	72.22	0.41	1.88		128.496	82
1949	72.43	0.39	1.83		128.323	82
1950	72.32	0.37	1.76		127.614	82
1951	72.40	0.36	1.71		127.217	82
1952	72.44	0.34	1.65		126.648	82
1953	72.41	0.33	1.59		125.977	82

1954	72.43	0.32	1.57		125.803	82
1955	72.39	0.31	1.55		125.638	82
1956	72.36	0.31	1.53		125.241	82
1957	72.46	0.3	1.52		124.854	82
1958	72.38	0.29	1.47		124.247	82
1959	72.35	0.28	1.46		124.214	82
1960	72.27	0.28	1.46		123.409	82
1961	72.46	0.27	1.43		123.179	82
1962	72.31	0.37	1.86		146.76	82
1963	72.35	0.69	3.67		142.671	82
1964	72.25	0.46	2.57		137.921	82
1965	72.25	0.38	2.13		134.453	82
1966	72.30	0.37	2.08		131.852	82
1967	72.30	0.37	2.08		130.42	82
1968	72.29	0.35	2.04		129.267	82
1969	72.31	0.33	1.98		127.71	82
1970	72.22	0.31	1.94		126.693	82
1971	72.15	0.29	1.86		125.948	82
1972	72.22	0.27	1.78		125.296	82
1973	72.30	0.26	1.77		124.366	82
1974	72.26	0.25	1.72		123.629	82
1975	72.17	0.23	1.66		123.696	82
1976	72.24	0.23	1.63		123.222	81
1977	72.23	0.22	1.61		122.821	81
1978	72.28	0.21	1.59		122.767	81
1979	72.21	0.21	1.57		122.266	81
1980	72.07	0.2	1.54		122.13	81
1981	72.27	0.2	1.53		121.684	81
1982	72.31	0.19	1.5		121.366	81
1983	72.22	0.19	1.48		120.699	81
1984	72.28	0.19	1.46		120.921	81
1985	72.37	0.18	1.43		120.095	81
1986	72.30	0.17	1.4		119.991	81
1987	72.31	0.17	1.39		119.947	81
1988	72.24	0.17	1.37		119.515	81
1989	72.27	0.17	1.33		119.128	81
1990	72.14	0.16	1.32		119.186	81
1991	72.25	0.16	1.29		118.968	81
1992	72.33	0.16	1.3		118.159	81
1993	72.08	0.34	2.6		141.914	81
1994	72.30	0.22	2.15		135.974	81
1995	72.30	0.16	1.55		131.522	81

1996	72.40	0.12	1.24		128.744	81
1997	72.25	0.11	1.14		126.232	81
1998	72.22	0.11	1.1		124.092	81
1999	72.17	0.11	1.08		123.501	81
2000	72.12	0.11	1.06		122.13	81
2001	72.22	0.11	1.05		121.366	81
2002	72.18	0.11	1.04		120.719	81
2003	72.20	0.11	1.04		120.489	81
2004	72.18	0.11	1.04		119.844	81
2005	72.17	0.11	1.04		119.674	81
2006	72.34	0.11	1.04		119.278	81
2007	72.32	0.1	1.04		119.665	81
2008	72.17	0.1	1.05		118.86	81
2009	72.26	0.1	1.06		118.378	81
2010	72.08	0.1	1.06		118.12	81
2011	72.27	0.1	1.06		118.001	81
2012	72.17	0.1	1.06		117.375	81
2013	72.21	0.1	1.06		116.666	81
2014	72.23	0.1	1.06		116.649	81
2015	72.32	0.1	1.04		116.694	81
2016	72.26	0.1	1.04		116.804	81
2017	72.19	0.1	1.02		116.006	81
2018	72.25	0.1	1.03		115.713	81
2019	72.29	0.1	1.02		115.923	81
2020	72.12	0.1	1.02		115.288	81
2021	72.28	0.1	1		114.903	81
2022	72.33	0.1	1		114.957	81
2023	72.25	0.1	0.99		114.672	81
2024	72.36	0.38	3.43		137.739	81
2025	72.27	0.17	1.94		131.349	81
2026	72.26	0.13	1.48		126.313	81
2027	72.07	0.09	1.13		123.305	81
2028	72.25	0.08	0.97		121.944	81
2029	72.21	0.08	0.91		121.058	81
2030	72.17	0.08	0.89		119.938	81
2031	72.29	0.07	0.88		118.968	81
2032	72.12	0.07	0.87		118.217	81
2033	72.16	0.07	0.85		117.739	81
2034	72.30	0.07	0.85		117.292	81
2035	72.10	0.07	0.83		116.892	81
2036	72.14	0.07	0.84		116.313	81
2037	72.23	0.07	0.85		116.416	81

2038	72.16	0.07	0.85		116.606	81
2039	72.24	0.07	0.83		116.166	81
2040	72.22	0.07	0.85		115.6	81
2041	72.37	0.07	0.86		114.915	81
2042	72.27	0.08	0.86		114.354	81
2043	72.35	0.08	0.87		113.767	81
2044	72.19	0.08	0.88		113.61	81
2045	72.16	0.08	0.87		113.527	81
2046	72.16	0.08	0.88		113.596	81
2047	72.23	0.08	0.89		113.727	81
2048	72.20	0.08	0.89		113.494	81
2049	72.31	0.08	0.91		112.867	81
2050	72.10	0.08	0.91		112.366	81
2051	72.16	0.08	0.91		129.788	81
2052	72.17	0.27	2.8		144.23	81
2053	72.06	0.24	1.8		152.338	81
2054	71.78	1.05	2.93		159.627	81
2055	71.58	1.48	4.33		166.571	81
2056	71.22	2.16	6.58		174.799	81
2057	70.77	3.53	11.01		184.466	81
2058	70.21	3.97	14.03		194.399	81
2059	69.51	2.46	15.18		207.439	81
2060	68.90	0.87	15.53		219.117	81
2061	68.24	0.28	15.59		227.858	81
2062	67.81	0.15	15.68		234.73	81
2063	67.04	0.14	16.2		241.391	80
2064	66.38	0.12	16.53		246.516	80
2065	65.64	0.13	16.95		250.018	80
2066	65.00	0.13	17.05		251.812	80
2067	64.29	0.15	17.45		255.928	80
2068	63.48	0.15	16.87		260.031	80
2069	62.85	0.26	17.31		263.447	79
2070	62.30	0.2	17.65		266.293	79
2071	61.26	0.22	17.89		269.237	79
2072	60.63	0.18	17.67		271.277	80
2073	59.84	0.19	17.74		273.704	80
2074	59.08	0.17	17.21		273.962	79
2075	58.28	0.16	17.32		274.847	79
2076	57.44	0.14	17.01		275.824	79
2077	56.96	0.13	16.99		276.738	79
2078	56.10	0.13	17.03		278.292	79
2079	55.17	0.12	16.8		279.397	79

2080	54.83	0.11	16.64		274.294	79
2081	54.48	0.1	15.01		251.445	79
2082	54.05	2.2	17.19		237.418	79
2083	53.81	3.67	15.56		228.877	79
2084	53.59	5.2	15.24		221.52	79
2085	53.37	2.12	15.74		213.828	79
2086	53.18	0.71	15.13		208.464	79
2087	53.16	0.42	13.85		204.369	79
2088	52.83	0.3	12.52		200.791	79
2089	52.91	0.3	12.22		198.205	79
2090	52.68	0.19	9.82		196.796	78
2091	52.73	1.39	9.81		194.999	79
2092	52.34	2.85	11.29		192.727	79
2093	52.49	3.57	11.8		190.218	79
2094	52.41	3.85	11.79		187.624	79
2095	52.48	3.81	11.36		185.216	79
2096	52.25	3.67	10.83		182.745	79
2097	52.19	3.42	10.13		180.376	78
2098	52.23	3.3	9.75		178.231	79
2099	52.21	3.09	9.25		176.132	79
2100	52.19	2.85	8.61		174.066	78
2101	52.13	2.61	8		172.127	78
2102	51.95	2.45	7.58		170.254	78
2103	52.18	2.28	7.13		168.409	78
2104	52.10	2.12	6.72		166.639	78
2105	52.18	1.93	6.19		165.022	78
2106	52.04	1.82	5.83		163.382	78
2107	52.28	1.68	5.42		161.78	78
2108	52.02	1.6	5.17		160.343	78
2109	52.03	1.5	4.86		158.974	78
2110	52.03	1.41	4.57		157.575	78
2111	52.06	1.34	4.31		156.249	78
2112	51.99	1.25	4.02		154.931	78
2113	51.94	1.17	3.76		153.697	78
2114	52.08	1.12	3.56		152.54	78
2115	52.07	1.07	3.38		151.429	78
2116	52.05	0.99	3.14		150.372	78
2117	52.13	0.95	2.98		149.451	78
2118	52.14	0.9	2.83		148.545	78
2119	52.08	0.85	2.67		147.538	78
2120	52.08	0.82	2.56		146.562	78
2121	52.16	0.78	2.43		145.638	78

2122	52.04	0.76	2.36		144.79	78
2123	52.13	0.73	2.26		144.01	78
2124	52.09	0.71	2.19		143.511	78
2125	52.14	0.68	2.08		142.68	78
2126	52.05	0.66	2.03		141.751	78
2127	52.18	0.65	1.98		141.375	78
2128	52.11	0.63	1.9		140.373	78
2129	52.05	0.61	1.85		139.68	78
2130	52.00	0.59	1.8		139.203	78
2131	52.09	0.58	1.75		138.348	78
2132	52.14	0.57	1.71		137.872	77
2133	52.01	0.56	1.69		137.446	78
2134	52.13	0.55	1.66		136.489	78
2135	52.15	0.54	1.61		136.387	78
2136	52.24	0.54	1.6		135.68	78
2137	52.25	0.53	1.57		135.07	78
2138	52.15	0.52	1.55		134.432	77
2139	52.16	0.52	1.54		133.886	77
2140	52.10	0.51	1.52		133.099	77
2141	52.19	0.51	1.51		133.167	77
2142	52.14	0.52	1.51		132.848	77
2143	52.14	0.52	1.51		132.586	78
2144	52.27	0.51	1.5		131.88	77
2145	52.16	0.52	1.5		131.505	77
2146	52.13	0.52	1.5		130.919	77
2147	52.24	0.52	1.5		130.246	77
2148	52.26	0.51	1.49		129.826	77
2149	52.16	0.51	1.49		129.274	77
2150	52.11	0	0.08		159.052	77
2151	52.00	0	0.06		151.953	77
2152	51.92	0.76	2.62		147.116	77
2153	51.98	1.33	4.85		143.887	77
2154	51.93	1.29	4.8		140.898	77
2155	51.91	1.16	4.36		138.617	77
2156	51.84	1.04	3.92		136.932	77
2157	51.80	0.92	3.5		135.507	77
2158	51.94	0.82	3.09		134.225	77
2159	51.95	0.72	2.75		132.321	77
2160	51.93	0.64	2.47		131.14	77
2161	51.94	0.57	2.19		129.829	77
2162	51.91	0.51	1.99		129.364	77
2163	51.92	0.46	1.81		128.602	77

2164	51.90	0.42	1.68		127.919	77
2165	51.91	0.38	1.54		127.324	77
2166	51.89	0.35	1.43		126.846	77
2167	51.97	0.33	1.33		126.266	77
2168	51.96	0.3	1.23		125.465	77
2169	51.90	0.28	1.16		125.201	77
2170	51.94	0.26	1.08		124.829	77
2171	51.90	0.24	1.03		124.424	77
2172	51.94	0.23	0.99		124.218	77
2173	52.14	0.22	0.95		123.501	77
2174	51.90	0.22	0.93		123.581	77
2175	52.05	0.21	0.9		123.262	77
2176	51.93	0.2	0.87		122.589	77
2177	52.10	0.19	0.85		121.936	77
2178	51.89	0.19	0.84		122.061	77
2179	52.07	0.19	0.83		121.738	77
2180	52.08	0.18	0.82		122.526	77
2181	51.95	1.11	5.24		148.365	77
2182	52.03	0.77	3.64		141.558	77
2183	51.94	0.51	2.43		137.185	77
2184	51.89	0.46	2.14		133.545	77
2185	51.88	0.44	2.1		130.978	77
2186	51.90	0.41	2.01		129.008	77
2187	51.95	0.38	1.92		127.647	77
2188	52.01	0.35	1.82		126.301	77
2189	51.86	0.32	1.73		124.766	77
2190	51.92	0.29	1.61		124.152	77
2191	51.93	0.27	1.53		123.786	77
2192	51.85	0.25	1.46		123.008	77
2193	51.99	0.24	1.39		122.724	77
2194	52.02	0.23	1.35		122.351	77
2195	51.92	0.21	1.29		121.833	77
2196	52.04	0.2	1.22		121.219	77
2197	51.91	0.19	1.18		120.814	77
2198	51.95	0.18	1.15		120.556	77
2199	52.04	0.17	1.09		119.982	77
2200	52.04	0.17	1.08		120.091	77
2201	51.99	0.16	1.07		119.99	77
2202	51.92	0.15	1.03		119.294	77
2203	51.96	0.15	1		118.703	77
2204	52.04	0.15	0.99		118.754	77
2205	51.96	0.14	0.96		118.089	77

2206	51.85	0.14	0.94		118.36	77
2207	52.00	0.13	0.93		117.561	77
2208	51.86	0.13	0.91		117.764	77
2209	51.93	0.12	0.9		117.041	77
2210	51.97	0.12	0.89		116.494	77
2211	51.93	0.12	0.86		123.881	77
2212	52.05	0.47	3.79		141.055	77
2213	51.98	0.24	2.18		134.945	77
2214	52.00	0.17	1.52		130.207	77
2215	51.88	0.14	1.25		127.114	77
2216	51.89	0.13	1.15		125.224	77
2217	51.87	0.12	1.11		123.461	77
2218	51.94	0.12	1.09		122.567	77
2219	51.92	0.12	1.08		122.015	77
2220	51.91	0.12	1.06		121.159	77
2221	52.04	0.11	1.04		120.381	77
2222	52.00	0.11	1.03		119.919	77
2223	51.99	0.11	1.03		119.384	77
2224	51.89	0.1	1		118.759	77
2225	51.81	0.1	0.99		118.187	77
2226	51.92	0.1	0.98		117.614	77
2227	51.92	0.1	1		117.598	77
2228	51.94	0.1	0.97		117.105	77
2229	51.90	0.1	0.98		117.045	77
2230	51.85	0.1	0.97		116.891	77
2231	51.83	0.1	0.96		116.882	77
2232	51.92	0.1	0.96		115.607	77
2233	52.02	0.09	0.94		115.051	77
2234	52.05	0.09	0.94		115.569	77
2235	51.90	0.09	0.93		115.37	77
2236	51.94	0.09	0.92		114.172	77
2237	51.90	0.09	0.91		114.788	77
2238	51.88	0.09	0.89		114.534	77
2239	52.15	0.09	0.9		114.368	77
2240	51.97	0.08	0.89		113.896	77
2241	51.96	0.08	0.89		113.42	77
2242	52.00	0.08	0.88		126.138	77
2243	51.96	0.31	3.31		135.885	77
2244	51.88	0.18	2.01		129.74	77
2245	51.88	0.12	1.44		125.652	77
2246	51.91	0.1	1.13		122.542	77
2247	51.95	0.08	0.97		121.54	77

2248	51.95	0.08	0.92		119.88	77
2249	51.96	0.07	0.89		118.846	77
2250	51.91	0.07	0.89		118.211	77
2251	51.90	0.07	0.87		117.459	77
2252	51.88	0.07	0.86		115.809	77
2253	51.99	0.07	0.86		115.59	77
2254	52.02	0.07	0.85		115.06	77
2255	51.92	0.07	0.85		114.799	77
2256	51.94	0.07	0.85		114.588	77
2257	51.76	0.07	0.87		114.306	77
2258	51.91	0.07	0.86		113.939	77
2259	51.96	0.07	0.86		114.125	77
2260	51.99	0.07	0.86		114.023	77
2261	51.99	0.07	0.87		114.187	77
2262	51.92	0.07	0.88		113.357	77
2263	51.92	0.07	0.87		113.076	77
2264	51.82	0.07	0.87		112.885	77
2265	51.98	0.07	0.85		112.537	77
2266	51.86	0.07	0.85		112.464	77
2267	51.86	0.07	0.87		112.28	77
2268	51.90	0.07	0.86		111.89	77
2269	52.04	0.07	0.86		111.224	77
2270	51.95	0.07	0.85		111.087	77
2271	51.90	0.07	0.85		111.277	77
2272	52.09	0.07	0.84		111.566	77
2273	52.06	0.07	0.85		124.987	77
2274	51.92	0.27	3.04		131.798	77
2275	52.05	0.17	2.06		125.303	77
2276	52.01	0.13	1.53		121.765	77
2277	51.94	0.1	1.21		119.138	77
2278	51.68	0.08	1		117.883	77
2279	51.92	0.07	0.87		116.665	77
2280	51.92	0.06	0.8		115.317	77
2281	51.93	0.06	0.77		114.974	77
2282	51.95	0.06	0.75		114.414	77
2283	51.96	0.06	0.74		114.248	77
2284	51.94	0.06	0.74		113.888	77
2285	51.95	0.06	0.74		113.397	77
2286	51.97	0.06	0.73		113.574	77
2287	51.87	0.06	0.74		112.657	77
2288	51.97	0.06	0.74		112.591	77
2289	51.93	0.06	0.74		111.928	77

2290	51.87	0.06	0.72		111.415	77
2291	51.91	0.06	0.72		110.718	77
2292	52.09	0.06	0.72		110.717	77
2293	52.08	0.06	0.7		110.61	77
2294	52.09	0.06	0.7		110.163	77
2295	52.03	0.06	0.71		128.267	76
2296	51.91	0.27	2.9		143.854	77
2297	51.79	0.88	2.63		153.95	77
2298	51.37	1.58	4.01		162.463	77
2299	51.14	1.87	5.08		169.2	77
2300	50.72	2.63	8.43		179.131	77
2301	50.23	3.49	13.56		190.627	77
2302	49.85	2.48	14.96		203.134	77
2303	49.18	1.25	14.84		214.695	77
2304	48.78	0.55	15.07		224.264	77
2305	48.09	0.35	15.2		232.243	77
2306	47.63	0.25	15.13		237.838	77
2307	47.19	0.23	15.55		242.463	77
2308	46.55	0.26	15.73		246.54	77
2309	45.82	0.26	15.8		250.232	77
2310	45.12	0.23	15.75		254.284	77
2311	44.35	0.12	16.57		257.52	77
2312	43.96	0.12	16.55		260.583	77
2313	43.20	0.12	16.64		263.267	77
2314	42.60	0.13	16.78		266.134	77
2315	41.86	0.14	16.96		269.265	77
2316	41.41	0.17	17.03		271.919	77
2317	40.42	0.16	17.19		274.554	77
2318	39.87	0.16	17.12		276.388	77
2319	39.13	0.16	17.23		278.43	77
2320	38.22	0.15	17.24		280.203	77
2321	37.78	0.15	16.89		280.817	77
2322	36.91	0.14	16.76		281.678	77
2323	36.09	0.14	16.83		282.963	76
2324	35.66	0.13	16.78		271.995	77
2325	35.20	0.15	16.07		251.073	77
2326	34.86	0.67	17.86		238.208	77
2327	34.61	4.7	15.83		229.287	77
2328	34.44	5.04	16		221.334	77
2329	34.27	0.84	15.47		215.016	77
2330	33.95	0.54	15.3		209.994	77
2331	33.88	0.33	14.1		206.083	77

2332	33.64	0.35	13.41		202.897	77
2333	33.68	0.27	12.64		200.704	77
2334	33.46	0.46	9.36		199.055	76
2335	33.17	2.45	11.5		196.997	77
2336	33.17	3.88	12.87		194.665	77
2337	33.21	4.5	13.18		192.113	77
2338	33.16	4.74	13.1		189.539	76
2339	33.12	4.74	12.75		186.994	77
2340	33.00	4.58	12.16		184.572	77
2341	32.87	4.48	11.85		182.232	77
2342	32.87	4.36	11.49		180.064	77
2343	32.50	4.14	10.93		177.986	77
2344	32.70	3.91	10.33		175.972	77
2345	32.54	3.77	9.96		174.016	77
2346	32.62	3.61	9.59		172.267	77
2347	32.46	3.45	9.2		170.488	77
2348	32.50	3.29	8.77		168.798	77
2349	32.59	3.14	8.36		167.135	77
2350	32.39	3.01	8.03		165.743	77
2351	32.49	2.89	7.72		164.224	77
2352	32.62	2.73	7.35		162.756	77
2353	32.43	2.63	7.11		161.266	77
2354	32.45	2.48	6.75		159.924	77
2355	32.51	2.37	6.46		158.465	77
2356	32.34	2.25	6.13		157.183	77
2357	32.50	2.15	5.87		155.889	77
2358	32.13	2.04	5.59		154.707	77
2359	32.25	1.92	5.29		153.4	77
2360	32.49	1.83	5.03		152.164	77
2361	32.38	1.72	4.76		150.939	77
2362	32.20	1.63	4.5		149.71	77
2363	32.31	1.55	4.29		148.688	77
2364	32.34	1.49	4.16		147.539	77
2365	32.30	1.42	3.95		146.529	77
2366	32.35	1.36	3.77		145.575	77
2367	32.47	1.31	3.63		144.805	77
2368	32.39	1.23	3.42		143.861	77
2369	32.35	1.17	3.22		143.028	78
2370	32.18	1.13	3.09		142.16	78
2371	32.25	1.08	2.95		141.254	78
2372	32.31	1.03	2.82		140.803	78
2373	32.34	0.99	2.7		139.959	78

2374	32.37	0.94	2.56		139.046	78
2375	32.51	0.9	2.46		138.733	78
2376	32.30	0.88	2.41		138.395	78
2377	32.29	0.85	2.3		137.092	78
2378	32.27	0.82	2.23		136.569	78
2379	32.48	0.8	2.18		136.063	78
2380	32.40	0.77	2.08		135.67	78
2381	32.47	0.75	2.02		135.112	78
2382	32.42	0.72	1.95		134.508	78
2383	32.27	0.71	1.92		133.87	78
2384	32.47	0.7	1.88		133.854	78
2385	32.14	0.68	1.82		133.154	78
2386	32.44	0.65	1.76		132.933	78
2387	32.32	0.65	1.74		132.018	78
2388	32.29	0.62	1.69		131.661	78
2389	32.53	0.61	1.66		131.256	78
2390	32.39	0.61	1.64		130.616	77
2391	32.33	0.59	1.61		130.675	78
2392	32.48	0.59	1.6		130.394	78
2393	32.35	0.58	1.59		146.567	78
2394	32.04	3.62	10.63		157.393	78
2395	32.25	1.81	6.14		150.521	77
2396	32.22	1.33	4.72		145.924	77
2397	32.07	1.31	4.71		142.486	78
2398	31.96	1.29	4.67		139.707	78
2399	31.98	1.19	4.37		137.484	78
2400	32.10	1.06	3.88		135.783	78
2401	32.16	0.94	3.46		134.065	78
2402	32.06	0.84	3.07		132.705	78
2403	32.03	0.75	2.77		131.769	78
2404	31.95	0.66	2.47		130.662	78
2405	32.01	0.59	2.22		129.566	78
2406	32.16	0.53	2.01		128.775	78
2407	31.97	0.48	1.84		128.741	78
2408	32.01	0.44	1.7		127.979	78
2409	31.98	0.4	1.56		127.19	78
2410	31.97	0.37	1.44		126.22	78
2411	32.08	0.34	1.34		125.588	78
2412	32.15	0.31	1.23		124.732	78
2413	32.26	0.29	1.16		124.425	78
2414	32.16	0.28	1.1		123.791	78
2415	32.23	0.26	1.05		123.69	78

2416	32.03	0.25	1		123.823	78
2417	32.19	0.23	0.96		123.167	78
2418	32.05	0.23	0.92		122.502	78
2419	32.12	0.22	0.89		121.773	78
2420	32.18	0.21	0.86		121.536	78
2421	32.20	0.21	0.85		121.437	78
2422	32.13	0.2	0.82		121.56	78
2423	32.13	0.19	0.8		120.926	78
2424	32.06	0.19	0.78		141.469	78
2425	31.98	1.04	4.88		146.14	78
2426	31.99	0.92	3.83		139.955	78
2427	32.02	0.63	2.62		135.646	78
2428	31.87	0.55	2.3		132.125	78
2429	31.96	0.52	2.24		129.844	78
2430	31.89	0.49	2.17		128.224	78
2431	32.02	0.46	2.05		127.136	78
2432	32.07	0.42	1.97		126.268	78
2433	32.10	0.39	1.86		125.2	78
2434	32.08	0.36	1.76		124.375	78
2435	31.98	0.33	1.68		123.576	78
2436	31.99	0.31	1.6		123.311	78
2437	31.98	0.29	1.53		123.023	78
2438	32.04	0.27	1.46		122.872	78
2439	31.96	0.25	1.4		121.763	78
2440	32.17	0.23	1.32		121.6	78
2441	32.02	0.22	1.28		121.168	78
2442	32.03	0.21	1.23		120.067	78
2443	32.06	0.2	1.19		119.928	78
2444	32.02	0.19	1.15		119.715	78
2445	31.89	0.18	1.11		118.811	78
2446	31.98	0.17	1.07		118.626	78
2447	31.94	0.17	1.04		117.769	78
2448	31.97	0.16	1.02		118.403	78
2449	32.01	0.16	0.98		118.618	78
2450	32.10	0.15	0.96		117.715	78
2451	32.13	0.15	0.94		117.669	78
2452	31.88	0.14	0.92		117.142	78
2453	31.98	0.14	0.92		117.237	78
2454	32.06	0.13	0.87		117.23	78
2455	32.08	0.13	0.87		135.525	78
2456	32.12	0.39	3.16		139.58	78
2457	32.03	0.28	2.3		133.394	78

2458	31.87	0.2	1.68		129.517	78
2459	32.08	0.16	1.35		126.574	78
2460	31.91	0.15	1.23		124.557	78
2461	32.00	0.14	1.18		122.973	78
2462	31.91	0.14	1.14		122.081	78
2463	31.86	0.13	1.11		121.053	78
2464	31.88	0.13	1.09		120.597	78
2465	31.95	0.12	1.07		120.237	78
2466	32.01	0.12	1.02		119.084	78
2467	31.99	0.11	1.01		118.77	78
2468	31.94	0.11	1		118.245	78
2469	32.01	0.11	0.98		117.521	78
2470	32.09	0.1	0.95		117.515	79
2471	31.97	0.1	0.94		117.453	79
2472	32.00	0.1	0.93		117.55	79
2473	32.03	0.1	0.92		116.745	79
2474	31.88	0.1	0.91		116.202	79
2475	31.99	0.1	0.91		115.59	79
2476	32.02	0.09	0.87		114.71	79
2477	31.98	0.09	0.87		115.127	79
2478	31.89	0.09	0.85		115.533	79
2479	31.88	0.09	0.83		115.043	79
2480	32.05	0.09	0.83		114.653	79
2481	31.91	0.08	0.81		114.127	79
2482	32.10	0.08	0.83		113.843	79
2483	31.95	0.08	0.82		114.151	79
2484	31.90	0.08	0.82		113.685	79
2485	31.85	0.08	0.81		114.264	79
2486	32.03	0.08	0.8		132.275	79
2487	32.04	0.27	2.94		134.606	79
2488	31.99	0.19	2.17		128.547	79
2489	31.82	0.15	1.66		124.913	79
2490	31.93	0.12	1.33		122.839	79
2491	31.93	0.1	1.11		121.3	79
2492	32.07	0.08	0.98		119.967	79
2493	31.94	0.08	0.91		119.121	79
2494	31.92	0.08	0.88		118.833	79
2495	31.85	0.07	0.86		118.14	79
2496	31.96	0.07	0.86		117.291	79
2497	31.94	0.07	0.85		116.368	79
2498	31.81	0.07	0.87		116.241	79
2499	31.95	0.07	0.85		115.763	79

2500	31.97	0.07	0.84		115.37	79
2501	31.87	0.07	0.83		115.223	79
2502	31.92	0.07	0.83		114.467	79
2503	31.88	0.07	0.82		114.443	79
2504	31.90	0.07	0.81		113.969	79
2505	31.96	0.07	0.81		114.043	79
2506	31.98	0.07	0.8		113.525	79
2507	31.94	0.07	0.8		113.381	79
2508	31.97	0.07	0.78		113.607	79
2509	31.80	0.07	0.78		113.412	79
2510	31.84	0.07	0.77		113.316	79
2511	31.88	0.07	0.77		113.097	80
2512	31.99	0.07	0.74		113.23	79
2513	31.92	0.07	0.74		112.513	80
2514	31.99	0.07	0.74		112.567	80
2515	31.76	0.07	0.74		112.302	80
2516	31.99	0.06	0.73		112.024	80
2517	31.86	0.08	0.87		131.155	80
2518	31.80	0.25	2.9		131.104	80
2519	31.82	0.2	2.29		125.17	80
2520	31.88	0.15	1.71		121.948	80
2521	31.86	0.12	1.38		119.785	80
2522	31.93	0.09	1.11		117.769	80
2523	31.69	0.08	0.96		117.455	80
2524	31.77	0.07	0.83		116.533	80
2525	31.81	0.06	0.74		115.571	80
2526	31.75	0.05	0.67		114.642	80
2527	31.89	0.05	0.63		114.4	80
2528	31.79	0.05	0.59		114.346	80
2529	31.84	0.04	0.55		114.092	80
2530	31.79	0.04	0.52		114.335	80
2531	31.69	0.04	0.5		113.628	80
2532	31.89	0.04	0.48		113.647	80
2533	31.75	0.03	0.47		113.596	80
2534	31.66	0.03	0.45		113.18	80
2535	31.84	0.03	0.43		112.983	80
2536	31.77	0.03	0.42		112.558	80
2537	31.75	0.03	0.4		111.89	80
2538	31.95	0.03	0.39		112.052	80
2539	31.86	0.03	0.37		112.125	80
2540	31.82	0.03	0.36		111.886	80
2541	31.96	0.02	0.35		111.421	80

2542	31.83	0.02	0.34		111.084	80
2543	31.78	0.02	0.34		110.707	80
2544	31.75	0.02	0.33		110.779	80
2545	31.85	0.02	0.32		110.993	80
2546	31.63	0.22	2.09		132.153	80
2547	31.78	0.2	2.39		145.449	80
2548	31.51	0.34	1.79		152.419	80
2549	31.34	1.19	3.1		160.087	80
2550	31.20	1.4	4.36		165.64	80
2551	30.99	1.46	4.95		170.329	80
2552	30.59	2.08	7.17		176.887	80
2553	30.09	3.72	12.87		186.71	80
2554	29.32	2.16	16.38		199.768	80
2555	28.75	0.28	16.58		214.489	80
2556	28.28	0.15	15.33		225.464	80
2557	27.65	0.14	15.56		232.147	80
2558	27.14	0.13	15.35		238.282	80
2559	26.65	0.11	15.81		242.977	80
2560	25.88	0.1	16.47		247.467	80
2561	25.17	0.1	16.53		252.374	81
2562	24.72	0.12	16.67		256.368	80
2563	23.94	0.12	17.1		260.352	80
2564	23.16	0.12	17.15		263.984	81
2565	22.56	0.12	17.27		267.416	80
2566	21.86	0.13	17.22		270.066	80
2567	21.32	0.14	17.11		272.039	80
2568	20.55	0.13	17.07		273.974	81
2569	19.78	0.13	16.99		275.827	81
2570	18.96	0.11	17.18		277.973	81
2571	18.43	0.11	17.37		280.059	81
2572	17.66	0.11	17.09		280.426	81
2573	17.15	0.1	16.8		281.163	81
2574	16.64	0.1	16.89		283.151	81
2575	16.03	0.09	16.58		282.021	81
2576	15.48	0.08	11.33		257.081	81
2577	15.12	0.09	13.68		241.994	80
2578	15.04	0.67	13.34		233.264	81
2579	14.98	1.38	14.35		225.583	81
2580	14.75	0.49	10.74		218.881	81
2581	14.58	0.09	9.7		213.826	81
2582	14.70	0.04	8.49		209.506	81
2583	14.49	0.04	7.21		205.96	81

2584	14.44	0.04	6.82		202.879	81
2585	14.35	0.04	5.45		201.711	81
2586	14.20	0.38	4.51		199.7	81
2587	14.36	1.04	5.55		197.504	81
2588	14.43	1.55	6.4		195.128	81
2589	14.36	1.85	6.71		192.62	81
2590	14.25	1.97	6.72		190.185	81
2591	14.21	1.98	6.49		187.818	81
2592	14.30	1.96	6.29		185.444	81
2593	14.23	1.82	5.77		183.092	81
2594	14.31	1.77	5.55		180.936	81
2595	14.21	1.68	5.26		178.858	81
2596	14.13	1.56	4.91		176.842	81
2597	14.10	1.43	4.53		174.967	81
2598	14.13	1.32	4.23		173.142	81
2599	14.10	1.2	3.87		171.329	81
2600	14.21	1.07	3.46		169.644	81
2601	14.26	0.98	3.21		167.933	81
2602	14.19	0.89	2.9		166.319	81
2603	14.17	0.8	2.65		164.692	81
2604	14.20	0.73	2.45		163.141	81
2605	14.14	0.67	2.25		161.639	81
2606	14.13	0.61	2.08		160.186	81
2607	14.27	0.56	1.93		158.674	81
2608	14.25	0.51	1.79		157.38	81
2609	14.20	0.47	1.68		156.028	81
2610	14.25	0.43	1.55		154.752	81
2611	14.15	0.41	1.46		153.715	81
2612	14.33	0.39	1.39		152.707	81
2613	14.20	0.35	1.28		151.541	81
2614	14.27	0.33	1.22		150.593	81
2615	14.25	0.32	1.16		149.544	81
2616	14.23	0.3	1.1		148.594	81
2617	14.16	0.28	1.04		147.926	81
2618	14.22	0.27	1		147.026	81
2619	14.47	0.25	0.94		146.205	81
2620	14.34	0.24	0.91		145.366	81
2621	14.25	0.23	0.87		144.406	81
2622	14.21	0.22	0.85		143.963	81
2623	14.27	0.21	0.82		143.237	81
2624	14.22	0.21	0.79		142.132	81
2625	14.31	0.2	0.78		141.651	81

2626	14.36	0.19	0.75		140.702	81
2627	14.25	0.19	0.74		139.751	81
2628	14.29	0.19	0.72		139.575	81
2629	14.36	0.19	0.72		138.752	81
2630	14.32	0.18	0.7		138.189	81
2631	14.28	0.18	0.69		138.003	81
2632	14.51	0.18	0.67		137.318	81
2633	14.49	0.18	0.67		136.411	81
2634	14.43	0.17	0.66		136.246	81
2635	14.50	0.17	0.65		135.703	81
2636	14.48	0.17	0.65		134.996	81
2637	14.37	0.17	0.66		134.505	81
2638	14.35	0.17	0.64		133.496	81
2639	14.37	0.17	0.63		132.754	81
2640	14.39	0.17	0.63		132.717	81
2641	14.32	0.17	0.62		132.488	81
2642	14.48	0.17	0.63		132.008	81
2643	14.34	0.17	0.63		131.686	81
2644	14.47	0.17	0.65		131.443	81
2645	14.51	2.65	9.09		158.217	81
2646	14.50	1.33	6.19		151.265	81
2647	14.31	0.84	4.05		145.652	81
2648	14.41	0.77	3.65		141.801	81
2649	14.26	0.75	3.58		138.652	81
2650	14.24	0.72	3.44		136.882	81
2651	14.25	0.65	3.13		135.216	81
2652	14.30	0.59	2.86		134.296	81
2653	14.29	0.53	2.6		132.958	81
2654	14.35	0.47	2.32		132.074	81
2655	14.29	0.42	2.09		131.532	81
2656	14.32	0.38	1.9		130.749	81
2657	14.36	0.34	1.74		130.275	81
2658	14.40	0.31	1.59		129.497	81
2659	14.51	0.28	1.46		128.567	81
2660	14.36	0.26	1.37		128.099	81
2661	14.36	0.24	1.28		127.694	82
2662	14.35	0.22	1.18		127.517	81
2663	14.36	0.21	1.11		126.854	81
2664	14.31	0.2	1.05		126.705	81
2665	14.40	0.19	0.99		126.36	82
2666	14.37	0.17	0.94		125.991	82
2667	14.42	0.17	0.89		125.525	81

2668	14.32	0.16	0.86		124.954	81
2669	14.31	0.15	0.82		124.735	81
2670	14.54	0.14	0.78		124.445	82
2671	14.31	0.13	0.75		123.98	82
2672	14.48	0.13	0.73		123.71	82
2673	14.38	0.13	0.71		123.117	81
2674	14.55	0.12	0.69		123.166	81
2675	14.38	0.12	0.67		122.887	82
2676	14.48	0.95	5.61		148.331	81
2677	14.34	0.46	3.27		141.076	81
2678	14.32	0.31	2.3		136.502	81
2679	14.35	0.25	1.83		133.241	81
2680	14.36	0.22	1.62		131.107	81
2681	14.44	0.21	1.53		129.208	82
2682	14.34	0.2	1.46		127.954	82
2683	14.28	0.19	1.4		127.047	82
2684	14.38	0.18	1.35		126.232	82
2685	14.40	0.17	1.29		125.994	82
2686	14.28	0.16	1.24		125.866	82
2687	14.30	0.15	1.18		124.574	82
2688	14.36	0.15	1.15		124.085	82
2689	14.48	0.14	1.11		123.323	82
2690	14.39	0.13	1.07		122.939	82
2691	14.38	0.13	1.06		122.259	82
2692	14.51	0.12	1.02		121.917	82
2693	14.41	0.12	0.99		121.637	82
2694	14.30	0.11	0.97		121.472	82
2695	14.34	0.11	0.94		121.785	82
2696	14.45	0.11	0.93		121.25	82
2697	14.35	0.1	0.91		121.275	82
2698	14.38	0.1	0.89		120.326	82
2699	14.44	0.1	0.87		120.184	82
2700	14.47	0.09	0.86		120.184	82
2701	14.38	0.09	0.84		120.019	82
2702	14.56	0.09	0.83		119.46	82
2703	14.41	0.09	0.82		118.99	82
2704	14.38	0.09	0.81		119.056	82
2705	14.51	0.08	0.79		118.658	82
2706	14.40	0.08	0.79		120.034	82
2707	14.54	0.53	5.24		142.043	82
2708	14.51	0.28	3.08		134.976	82
2709	14.45	0.2	2.31		130.194	82

2710	14.37	0.16	1.78		127.375	82
2711	14.53	0.13	1.46		125.293	82
2712	14.29	0.11	1.25		124.193	82
2713	14.46	0.1	1.11		122.756	82
2714	14.47	0.09	1.04		122.673	82
2715	14.39	0.09	1		122.021	82
2716	14.39	0.08	0.96		121.558	82
2717	14.33	0.08	0.93		121.605	82
2718	14.33	0.08	0.91		120.616	82
2719	14.36	0.07	0.87		119.965	82
2720	14.35	0.07	0.86		119.692	82
2721	14.39	0.07	0.82		118.94	82
2722	14.39	0.07	0.79		118.601	82
2723	14.34	0.06	0.76		118.141	82
2724	14.41	0.06	0.73		118.498	82
2725	14.42	0.06	0.71		117.917	82
2726	14.30	0.06	0.67		117.894	82
2727	14.28	0.05	0.64		117.801	83
2728	14.44	0.05	0.6		117.498	83
2729	14.25	0.05	0.58		117.357	82
2730	14.34	0.04	0.56		117.63	82
2731	14.52	0.04	0.52		117.129	82
2732	14.44	0.04	0.5		116.361	82
2733	14.41	0.04	0.47		115.983	82
2734	14.42	0.03	0.44		116.038	82
2735	14.31	0.03	0.41		116.524	82
2736	14.47	0.03	0.39		116.326	82
2737	14.52	0.03	0.38		121.989	82
2738	14.39	0.45	5.24		136.989	82
2739	14.37	0.25	3.17		130.419	82
2740	14.37	0.19	2.48		126.422	83
2741	14.34	0.15	1.95		124.406	83
2742	14.27	0.12	1.57		122.535	83
2743	14.33	0.1	1.3		121.651	82
2744	14.30	0.09	1.13		120.73	82
2745	14.25	0.07	1		120.28	82
2746	14.30	0.07	0.89		119.949	82
2747	14.32	0.06	0.81		118.898	83
2748	14.29	0.05	0.73		118.698	83
2749	14.31	0.05	0.66		118.31	83
2750	14.28	0.04	0.6		117.43	83
2751	14.29	0.04	0.54		117.13	83

2752	14.34	0.03	0.5		116.655	82
2753	14.30	0.03	0.47		117.05	83
2754	14.30	0.03	0.42		116.498	83
2755	14.18	0.02	0.39		116.645	83
2756	14.37	0.02	0.37		117.279	83
2757	14.32	0.02	0.35		116.852	83
2758	14.41	0.02	0.32		116.531	83
2759	14.34	0.02	0.3		115.993	83
2760	14.28	0.02	0.29		116.376	83
2761	14.25	0.01	0.27		115.935	83
2762	14.44	0.01	0.27		115.929	83
2763	14.40	0.01	0.25		115.435	83
2764	14.29	0.01	0.25		114.88	83
2765	14.38	0.01	0.24		114.664	83
2766	14.32	0.01	0.23		114.251	83
2767	14.33	0.01	0.23		114.129	83
2768	14.34	0.01	0.23		123.124	83
2769	14.33	0.41	4.8		133.17	83
2770	14.25	0.26	3.23		127.169	83
2771	14.34	0.2	2.54		123.929	83
2772	14.22	0.17	2.05		122.012	83
2773	14.25	0.14	1.72		120.891	83
2774	14.20	0.12	1.46		119.419	83
2775	14.27	0.1	1.27		118.579	83
2776	14.27	0.09	1.13		117.661	83
2777	14.18	0.08	1		117.601	83
2778	14.34	0.07	0.89		117.359	83
2779	14.21	0.06	0.82		117.112	83
2780	14.26	0.06	0.74		116.492	83
2781	14.28	0.05	0.66		116.087	83
2782	14.34	0.04	0.59		115.657	83
2783	14.27	0.04	0.53		114.922	83
2784	14.34	0.03	0.49		114.667	83
2785	14.30	0.03	0.45		114.801	83
2786	14.24	0.03	0.41		114.264	83
2787	14.34	0.02	0.37		113.795	83
2788	14.21	0.53	5.32		135.351	83
2789	13.99	0.41	3.19		148.254	83
2790	13.93	0.98	3.39		156.675	83
2791	13.52	1.87	5.09		163.81	83
2792	13.09	2.57	7.32		170.423	83
2793	12.55	3.17	11.23		179.942	83

2794	11.99	3.08	15.26		190.267	83
2795	11.63	2.7	16.19		201.201	83
2796	10.96	1.04	15.62		212.53	83
2797	10.41	0.83	14.86		220.575	83
2798	10.12	0.33	15.36		227.645	83
2799	9.59	0.23	15.22		233.301	83
2800	9.04	0.22	15.04		237.388	83
2801	8.56	0.24	14.9		240.67	83
2802	8.03	0.23	14.79		243.656	83
2803	7.68	0.22	14.71		246.42	83
2804	7.03	0.19	14.96		249.169	83
2805	6.57	0.19	14.79		251.749	83
2806	6.13	0.18	14.99		254.524	83
2807	5.50	0.17	15.16		257.161	83
2808	4.94	0.15	15.26		259.298	83
2809	4.50	0.13	15.3		261.507	83
2810	3.85	0.13	15.32		263.724	83
2811	3.46	0.12	15.17		265.046	83
2812	2.81	0.1	15.18		266.541	82
2813	2.21	0.09	15.18		268.209	83
2814	1.73	0.1	15.16		270.068	83
2815	1.08	0.09	15.13		271.637	83
2816	0.57	0.1	15.16		273.781	82
2817	0.00	0.11	15.39		271.358	83

OMNI-Test Laboratories, Inc.

ASTM E2618 Wood Heater Run Sheets

Client: Central Boiler Project Number: 0117WB Run Number: 4
Model: Edge 760 Tracking Number: 2383 Date: 8/27/19
Test Crew: B Adams
OMNI Equipment ID numbers:

Wood Heater Supplemental Data

Start Time: 1937 8/27/19
Stop Time: 1836 8/29/19

Booth #: E3

~~Stack Gas Leak Check:~~
Initial: good Final:

Sample Train Leak Check:
A: 00 @ 12 "Hg
B: 0.0 @ 10 "Hg

Calibrations: Span Gas CO_2: 17.06 CO: 4.29

	Pre Test		Post Test	
	Zero	Span	Zero	Span
Time	1743	1743	8/30/19 1838	1838
CO_2	0.00	17.07	-0.04	17.22
CO	0.00	4.29	-0.00	4.30

Air Velocity (ft/min): Initial: <50 Final: <50
Scale Audit (lbs): Initial: 10.0 Final: 10.0
Pitot Tube Leak Test: Initial: good Final: good
Stack Diameter (in): 8"
Induced Draft: 0.0
% Smoke Capture: 100%
Flue Pipe Cleaned Prior to First Test in Series:
Date: 8/7/19 Initials: BR

	Initial	Middle	Ending
P_b (in/Hg)	29.75	29.78	29.93
RH (%)	26	29	44
Ambient (°F)	85		83

Tunnel Traverse

Microtector Reading	dP (in H_2O)	T(°F)
1 2	0.014 0.018	90
3 4	0.015 0.015	90 90
5	0.014	90
6	0.016	90
6	0.014	90
1 2	0.011 0.015	90 90
3	0.014	90
4	0.015	90
5 - 0.016 Center:		90
	0.014	90

Background Filter Volume: 598.504

Tunnel Static Pressure (in H_2O):	
Beginning of Test	End of Test
-.158	-.158

Technician Signature: B A Date: 10/21/19

OMNI-Test Laboratories, Inc.

ASTM E2618 Wood Heater Run Sheets

Client: Central Boiler Project Number: 0117WB Run Number: 4
Model: Edge 760 Tracking Number: 2383 Date: 8/27/19
Test Crew: D Davis
OMNI Equipment ID numbers:

Wood Heater Run Notes

Air Control Settings

Primary:

Auto

Secondary: fixed

Tertiary/Pilot: N/A

Fan: Auto

Preburn Notes

Time	Notes
0	Burned ≈ 220 lbs of preburn fuel then set to CAT I Heat draw ≈ 34,000 BTU Demand water temp 165-185

Test Notes

Sketch test fuel configuration:

See photo

Start up procedures & Timeline:

Bypass: Not used
Fuel loaded by: 2:15
Door closed at: 2:15
Primary air: Automatic

Notes: CAT 1 test setting

Time	Notes
60	changed front filter in train A
1992	changed front filter in train A and B

Technician Signature: B D

Date: 10/20/19

Section 5

Testing Results

Table 1A - Data Summary Part A

						θ	W_{fuel}	MC_{ave}	Q_{inLHV}	Q_{inHHV}	Q_{out}
Category	Run No	Load % Capacity	Target Load	Actual Load	Actual Load	Test Duration	Wood Weight as-fired	Wood Moisture	Heat Input (LHV)	Heat Input (HHV)	Heat Output
			Btu/hr	Btu/hr	% of max	hrs	lb	% DB	Btu	Btu	Btu
I	4	< 15% of max	<38,337	34411	14.6%	46.95	273.3	20.83	1,806,821	1,945,250	1,615,589
II	3	16-24% of max	40,893 - 61,340	54122	22.9%	28.12	268.9	21.85	1,762,872	1,897,934	1,521,723
III	2	25-50% of max	63,895 - 127,791	108,585	46.0%	15.13	272.2	22.94	1,768,667	1,904,173	1,643,246
IV	1	Max capacity	N/A	235,938	100.0%	6.98	269.5	20.90	1,780,630	1,917,053	1,647,633

Table 1B - Data Summary Part B

			T2 Min	E_T	E	E	$E_{g/hr}$	$E_{g/kg}$	η_{del}	η_{SLM}
Category	Run No	Load % Capacity	Min Return Water Temp.	Total PM Emissions	PM Output Based	PM Output Based	PM Rate	PM Factor	Delivered Efficiency (HHV)	Stack Loss Efficiency (HHV)
			°F	g	lb/MMBtu Out	g/MJ	g/hr	g/kg	%	%
I	4	< 15% of max	157.5	82.2	0.11	0.05	1.8	0.8	83.1	80.5
II	3	16-24% of max	153.4	61.8	0.09	0.04	2.2	0.6	80.2	70.9
III	2	25-50% of max	147.8	71.1	0.10	0.04	4.7	0.7	86.3	82.8
IV	1	Max capacity	131.9	59.7	0.08	0.03	8.6	0.6	86.0	83.3

Table 1C - Hang Tag Information

MANUFACTURER:	Central Boiler		
MODEL NUMBER:	Classic Edge 760		
MAXIMUM OUTPUT RATING	Q_{MAX}	235,938	Btu/hr
ANNUAL EFFICIENCY RATING:	ηavg	83.4%	**(Using higher heating value)**
		89.8%	(Using lower heating value)
PARTICLE EMISSIONS:	E_{avg}	3.0	GRAMS/HR (average)
		0.10	LBS/MILLION Btu OUTPUT
CARBON MONOXIDE:	CO	5.553	GRAMS/MINUTE (average)

Table 2 - Year Round Use Weighting

Category	Weighting Factor (F_i)	$\eta_{del,i}$ x F_i	$E_{g/MJ,i}$ x F_i	$E_{g/kg,i}$ x F_i	$E_{lb/MMBtu\ Out,i}$ x F_i	$E_{g/hr,i}$ x F_i	$CO_{g/hr,i}$ x F_i
I	0.437	36.3	0.02	0.35	0.05	0.77	195.6
II	0.238	19.1	0.01	0.15	0.02	0.52	103.3
III	0.275	23.7	0.01	0.19	0.03	1.29	62.6
IV	0.05	4.3	0.00	0.03	0.00	0.43	11.2
Totals	1	83.4	0.04	0.7	0.10	3.0	372.7

TEST RESULTS AND DISCUSSION

Results

A total of four test runs were performed on the Classic Edge 760 boiler. Four test runs were conducted in the following categories based on the manufacturer's rated heat capacity: one in the 15% or less of maximum capacity (category I); one in the 16-24% of capacity (category II); one in the 25-50% of capacity (category III); and one at the manufacturer's rated heat capacity (category IV).

The Classic Edge 760 furnace meets the 2020 particulate matter emission limit of a weighted average 0.15 lbs/mmBtu heat output when tested with Oak cord wood.

Emissions (lb/mmbtu output)	
Heating Season	0.10
Year-Round Use	0.10

The average Btu/hr for 8-hour burn time was measured to be **220,051 Btu/hr**. The average efficiency for 8-hour burn time was measured to be **86.0%**.

Precision

The precision and accuracy of the emissions and heating efficiency results presented in this report cannot be specified because of the unmeasured variability of results that would occur between identical appliances and fueling protocols. It is estimated, using precision data from similar sampling and measurement methods, that the precision of the results presented in this report are +/- 10 to 12 percentage points of the emissions values and +/- 3 to 4 percentage points of thermal efficiency.

One-Hour Filter Discussion

§ 60.5476(c)(6) of 40 CFR 60 states, "For all tests conducted using ASTM 2515–11 [sic]… the manufacturer and approved test laboratory must also measure the first hour of particulate matter emissions for each test run using a separate filter in one of the two parallel trains. The manufacturer and approved test laboratory must report the test results for the first hour separately and also include them in the total particulate matter emissions per run.

Section 6

Example Calculations

Equations and Sample Calculations – Wood-fired Hydronic Heater

Manufacturer:	Central Boiler
Model:	Edge 760
Run:	4
Category:	I

Equations used to calculate the parameters listed below are described in this appendix. Sample calculations are provided for each equation. The raw data and printout results from a sample run are also provided for comparison to the sample calculations.

BR	Dry burn rate, kg/hr
m_n	Total particulate matter collected, mg
$V_{m(std)}$	Volume of gas sampled corrected to standard conditions, dscf
v_s	Average dilution tunnel gas velocity, ft/sec
C_s	Particulate concentration, g/dscf
Q_{sd}	Dilution tunnel gas flow rate, dscf/min
E	Particulate emission rate, lbs/hr
E_T	Total particulate emissions, grams
MC_{avg}	Average fuel load moisture content, %
PR	Proportional rate variation, %
Q_{in}	Heat input, Btu
Q_{out}	Heat output, Btu
	Heat output rate, Btu/hr
$E_{g/MJ}$	Emission rate, g/MJ
$E_{lb/MMBtu\ input}$	Emission rate, lb/MMBtu input
$E_{lb/MMBtu\ output}$	Emission rate, lb/MMBtu output
$E_{g/kg}$	Emission rate, g/kg
$E_{g/hr}$	Emission rate, g/hr
$E_{g/hr\ 10,000\ BTU}$	Emission rate, g/hr 10,000 Btu
η_{del}	Delivered efficiency, %
E_{avg}, η_{avg}	Weighted average emissions and efficiency, g/kg, %
	Average Btu/hr for 8 hour burn time, Btu/hr

BR – Dry Burn Rate, kg/hr
Using EPA Method 28 equation 28-3:

$$BR = \frac{60 \times W_{wd}}{\theta} \times \frac{100 - \%M_w}{100}$$

Where,

BR	=	Dry burn rate, kg/hr
W_{wd}	=	Mass of wood burned (wet basis) during test run, lb
θ	=	Total time of test run, minutes
$\%M_w$	=	Average moisture content of test fuel charge, wet basis percent

Sample Calculation:

Using the equation 28-2 for converting dry basis moisture to wet basis moisture,

$$\%M_w = \frac{\%M_D \times 100}{\%M_D + 100}$$

$$\%M_W = \frac{\underline{20.83} \text{ x } 100}{\underline{20.83} + 100}$$

$\%M_W$ = <u>17.24</u> %

W_{wd} = <u>273.3</u> lbs

W_{wd} = <u>273.3</u> x 0.4536 kg/lb

W_{wd} = <u>124.0</u> kg

$$BR = \frac{60 \text{ x } \underline{124.0}}{\underline{2817}} \text{ x } \frac{100 - \underline{17.24}}{100}$$

BR = <u>2.19</u> kg/hr

m_n – Total Particulate Matter Collected, mg
ASTM E2515 Equation (12)

$$m_n = m_p + m_f + m_g$$

Where:

m_n = Total particulate matter collected, mg

m_p = Particulate matter from probe, mg

m_f = Particulate matter from filters, mg

m_g = Particulate matter from filter seals, mg

Sample Calculation:

Using equation for Train 1 (first-hour):

m_n = 0.0 + 0.0 + 0.0

m_n = 0.0 mg

Using equation for Train 1(Post First Hour Change-out):

m_n = 2.2 + 32.6 + 1.0

m_n = 35.8 mg

Train 1 Aggregate:

m_n = 0.0 + 35.8

m_n = 35.8 mg

Using equation for Train 2:

m_n = 2.6 + 30.9 + 1.3

m_n = 34.8 mg

$V_{m(std)}$ – Volume of Gas Sampled Corrected to Dry Standard Conditions, dscf
ASTM E2515 equation (6)

$$V_{m(std)} = V_m \times Y \times K_1 \times \frac{(P_b + \frac{\Delta H}{13.6})}{T_m}$$

Where:

K_1	=	17.64 °R/in. Hg
V_m	=	Volume of gas sample measured at the dry gas meter, dcf
Y	=	Dry gas meter calibration factor, dimensionless
P_b	=	Barometric pressure at the testing site, in. Hg
ΔH	=	Average pressure differential across the orifice meter, in. H_2O
T_m	=	Absolute average dry gas meter temperature, °R

Sample Calculation:

Using equation for Train 1:

$$V_{m(std)} = 458.64 \times 0.992 \times 17.64 \times \frac{(29.82 + \frac{1.32}{13.6})}{(95.8 + 460)}$$

$V_{m(std)}$ = 431.99 ft3

Using equation for Train 2:

$$V_{m(std)} = 464.77 \times 0.989 \times 17.64 \times \frac{(29.82 + \frac{1.08}{13.6})}{(95.03 + 460)}$$

$V_{m(std)}$ = 436.79 ft3

Using equation for ambient train:

$$V_{m(std)} = 598.5 \times 1.001 \times 17.64 \times \frac{(29.82 + \frac{0.26}{13.6})}{(81.95 + 460)}$$

$V_{m(std)}$ = 581.87 ft3

Using equation for First Hour Train:

$$V_{m(std)} = 9.642 \times 0.992 \times 17.64 \times \frac{(29.75 + \frac{1.29}{13.6})}{(95 + 460)}$$

$V_{m(std)}$ = 9.076 ft3

v_s – Dilution Tunnel Gas Velocity, ft/sec
ASTM E2515 equation (7)

$$v_s = F_P \times k_p \times C_p \times (\sqrt{\Delta P})_{avg} \times \sqrt{\frac{T_{s(avg)}}{P_s \times M_s}}$$

Where:

F_p	=	Adjustment factor for center of tunnel pitot tube placement, Fp = $\frac{V_{strav}}{V_{scent}}$, ASTM E2515 Equation (1)
v_{scent}	=	Dilution tunnel velocity calculated after the multi-point pitot traverse at the center, ft/sec
v_{strav}	=	Dilution tunnel velocity calculated after the multi-point pitot traverse, ft/sec
k_p	=	Pitot tube constant, $85.49 \frac{ft}{\sec}\left[\frac{(lb/lb-mole)\times(inches Hg)}{(R)\times(inches H_2O)}\right]^{1/2}$
C_p	=	Pitot tube coefficient: 0.99, unitless
ΔP*	=	Velocity pressure in the dilution tunnel, in H_2O
T_s	=	Absolute average gas temperature in the dilution tunnel, °R; (°R = °F + 460)
P_s	=	Absolute average gas static pressure in diltuion tunnel, = $P_{bar} + P_g$, in Hg
P_{bar}	=	Barometric pressure at test site, in. Hg
P_g	=	Static pressure of tunnel, in. H_20; (in Hg = in $H_20/13.6$)
M_s	=	**The dilution tunnel wet molecular weight; M_s = 28.78 assuming a dry weight of 29 lb/lb-mole

Sample calculation:

$$M_s = 29 \times (1 - 0.02) + 18.0 \times 0.02 = 28.78$$

$$V_s = \underline{1.025} \times 85.49 \times \underline{0.99} \times \underline{0.118} \times \left(\frac{\underline{89.165} + 460}{\left(\underline{29.82} + \frac{\underline{-0.16}}{13.6}\right) \times 28.78} \right)^{1/2}$$

$$V_s = \underline{8.23} \text{ ft/s}$$

*The ASTM test standard mistakenly has the square root of the average delta p instead of the average of the square root of delta p. The current EPA Method 2 is also incorrect. This was verified by Mike Toney at EPA.

**The ASTM test standard mistakenly identifies Ms as the dry molecular weight. It should be the wet molecular weight as indicated in EPA Method 2.

C_s – Particulate Concentration, g/dscf
ASTM E2515 equation (13)

$$C_s = K_2 \times \frac{m_n}{V_{m(std)}}$$

Where:

K_2	=	Constant, 0.001 g/mg
C_s	=	Concentration of particulate matter in stack gas, dry basis, corrected to standard conditions, g/dscf
m_n	=	Total mass of particulate matter collected in the sampling train, mg
$V_{m(std)}$	=	Volume of gas sampled corrected to dry standard conditions, dscf

Sample calculation:

For Train 1:

$$C_s = 0.001 \times \frac{35.8}{431.99}$$

C_s = 0.000083 g/dscf

For Train 2

$$C_s = 0.001 \times \frac{34.8}{436.79}$$

C_s = 0.000080 g/dscf

For Ambient Train

$$C_s = 0.001 \times \frac{0.6}{581.87}$$

C_s = 0.000001 g/dscf

For First Hour Train:

$$C_s = 0.001 \times \frac{0.0}{9.08}$$

C_s = 0.000000 g/dscf

Q_{sd} – Average Dilution Tunnel Gas Flow Rate, dscf/hr
ASTM equation (3)

$$Q_{sd} = 3600 \times (1 - B_{ws}) \times v_s \times A \times \frac{T_{std}}{T_{s(avg)}} \times \frac{P_s}{P_{std}}$$

Where:

Q_{sd}	=	Gas flow rate corrected to dry, standard conditions, dscf/hr
3600	=	Conversion from seconds to hours (ASTM method uses 60 to convert in minutes)
B_{ws}	=	Moisture content of dilution tunnel gas, ratio; assume 2%
v_s	=	Average dilution tunnel gas velocity, ft/sec
A	=	Cross sectional area of dilution tunnel, ft^2
T_{std}	=	Standard absolute temperature, 528 °R
$T_{s(avg)}$	=	Average absolute dilution tunnel temperature, °R, (°R = °F + 460)
P_b	=	Barometric pressure at test site, in. Hg
P_g	=	Dilution tunnel static pressure, in. Hg
P_s	=	Absolute dilution tunnel gas pressure, in Hg, (Hg = $P_b + P_g$)
P_{std}	=	Standard absolute pressure, 29.92 in Hg

Sample calculation:

$$Q_{sd} = 3600 \times (1 - 0.02) \times \underline{8.23} \times \underline{0.785} \times \frac{528}{\underline{89.16} + 460} \times \frac{\underline{29.82} + \frac{\underline{-0.158}}{13.6}}{29.92}$$

Q_{sd} = <u>21820.75</u> dscf/hr

E, E_T – Particulate Emissions
ASTM E2515 equation (15) section

$$E_T = (c_s - c_r) \times Q_{std} \times \theta$$

Where:

E_T	=	Particulate emissions, g
C_s	=	Concentration of particulate matter in the stack, g/dscf
C_r	=	Concentration of ambient particulate matter, g/dscf
Q_{std}	=	Average dilution tunnel gas flow rate, dscf/hr
θ	=	Total time of test run, minutes

Sample calculation:

For Train 1

E_T = (0.000083 - 0.000001) x 21820.75 x 2817 /60

E_T = 83.84 g

For Train 2

E_T = (0.000080 - 0.000001) x 21820.7 x 2817 /60

E_T = 80.57 g

Average

E = 82.21 g

For First Hour Train

E_T = (0.000000 - 0.000001) x 21820.75 x 60 /60

E_T = -0.02 g

Total emission values shall not differ by more than 7.5% from the total average emissions

7.5% of the average =	6.17
Train 1 difference =	1.64
Train 2 difference =	1.64

MC_{avg} – Average Fuel Load Moisture Content, %

Where:

$$MC_{avg} = \left[\left[\sum W_i \times MC_i\right]\right] \div W_{fuel}$$

W_i = Weight of individual fuel pieces, lbs

MC_i = Average moisture of individual fuel pieces, % dry

Sample calculation:

MC_{avg} = (12.5 x 19.4 + 10.6 x 21.2 + 10.2 x 19.0 +
11.5 x 19.5 + 12.0 x 20.4 + 10.7 x 19.7 +
11.6 x 21.8 + 11.3 x 23.1 + 12.1 x 19.0 +
. . . + (273.3 - 273.3) x 10) / 273.3

MC_{avg} = 20.83 %

PR - Proportional Rate Variation
ASTM E2515 equation (16)

$$PR = \left[\frac{\theta \times V_{mi} \times V_s \times T_m \times T_{si}}{\theta_i \times V_m \times V_{si} \times T_{mi} \times T_s} \right] \times 100$$

Where:

θ = Time of test, min

θ_i = Time of interval, 1 min

V_{mi} = Volume of gas sample measured by the dry gas meter during the "ith" time interval, dscf

V_m = Volume of gas sample as measured by dry gas meter, dscf

V_{si} = Average gas velocity in the dilution tunnel during the "ith" time interval, m/sec

V_s = Average gas velocity in the dilution tunnel, m/sec

T_{mi} = Average dry gas meter temperature during the "ith" time interval, ^oR

T_m = Average dry gas meter temperature, ^oR

T_{si} = Average gas temperature in the dilution tunnel during the "ith" time interval, ^oR

T_s = Average gas temperature in the dilution tunnel, ^oR

Sample calculation (for the first 10 minute interval of Train 1):

$$PR = \left(\frac{2817 \times 0.157 \times 8.226 \times (95.8 + 460) \times (103.0 + 460)}{1 \times 458.6 \times 8.317 \times (91.00 + 460) \times (89.2 + 460)} \right) \times 100$$

PR = 98.62 %

Q_{in} – Heat Input, Btu

$$Q_{in} = (W_{fuel} / (1 + (MC / 100))) \times HV$$

Where:

W_{fuel} = Fuel charge weight, lbs

MC = Moisture content, %

HHV = Higher heating value, 8600 Btu/lb

LHV = Lower heating value, 7988 Btu/lb

Sample calculation:

For the Higher heating value

Q_{in} = (273.3 / (1 + (20.8 /100))) x 8600

Q_{in} = 1945250 Btu

For the Lower heating value

Q_{in} = (273.3 / (1 + (20.8 /100))) x 7988

Q_{in} = 1806821 Btu

Q_{out} – Heat Output, Btu
Test Method 28 WHH section 13.5.1

$$Q_{out} = \left|\sum (C_p \times \Delta T \times M \times t)\right| + (W_{app} \times C_{steel} + C_P \times W_{water}) \times (TF_{avg} - TI_{avg})$$

$$M = V_f \times \sigma$$

$$\sigma = (62.56 + (-0.0003413 \times T_{3i}) + (-0.00006225 \times T_{3i}^2)) \times 0.1337$$

$$C_P = 1.0014 + (-0.000003485 \times T_{3i})$$

Where:

C_p	=	*Heat capacity of water, Btu/lb-°F
C_{steel}	=	Heat capacity of steel, 0.1 Btu/lb-°F
ΔT	=	Load Side thermopile reading, °F
M	=	Mass flow rate of water, lb/min
t	=	Elapsed time, 1 min
W_{app}	=	Weight of appliance, lbs
W_{water}	=	Weight of water, lbs
TF_{avg}	=	Final average temperature of appliance and water, °F
TI_{avg}	=	Initial average temperature of appliance and water, °F
T_{avg}	=	Average temperature of water in the load side, °F
T_{3i}	=	Load inlet temperature at interval i, °F
V_f	=	Volumetric flow rate of water, gal/min
σ	=	Density of water, lb/gal

Sample calculation, For the first 1 minute period: :

C_p = 1.0014 + (-0.000003485 x 76.48)

C_p = 1.001 Btu/lb°F

σ = (62.56+(-0.0003413 x 76.48) + (-0.00006225 x 76.5 ^{2})) x 0.1337

σ = 8.31

M = 0.72 x 8.31

M = 5.94 lbs/min

C_p x ΔT x M x t = 1.001 x 92.78 x 5.94 x 1

C_p x ΔT x M x t = 552 Btu

Total Sum for Run 1:

$\left|\sum (C_p \times \Delta T \times M \times t)\right|$ = 1574407 Btu

Q_{out} for Run 1:

Q_{out} = 1574407 + (2186 x 0.1 + 1.001 x 2689) x (181.01 - 166.85)

Q_{out} = 1615589 Btu

Heat Output Rate, Btu/hr
Test Method 28 WHH section 13.5.2

$$Heat\ \ output\ \ rate = Q_{out} / test\ \ duration$$

Sample calculation:

Heat output rate = 1615589 / (2817 / 60)

Heat output rate = 34411 Btu/hr

Emission Rates, g/MJ, lb/MMBTU, g/kg, g/hr
Test Method 28 WHH section 13.5.3

$$E_{g/MJ} = E_T / (Q_{out} \times 0.001055)$$

$$E_{lb/MMBtu\ input} = (E_T / 453.59) / (Q_{input} \times 10^{-6})$$

$$E_{lb/MMBtu\ output} = (E_T / 453.59) / (Q_{output} \times 10^{-6})$$

$$E_{g/kg} = E_T / (W_{fuel} / (1 + MC / 100))$$

$$E_{g/hr} = E_T / Test\ Duration$$

$$E_{g/hr\ 10{,}000Btu} = \frac{E_T}{(Test\ Duration \times (Q_{out} / 10{,}000))}$$

Sample calculation:

$E_{g/MJ}$ = 82.21 / (1615589 x 0.001055)
$E_{g/MJ}$ = 0.0482 g/MJ

Using higher heat value

$E_{lb/MMBtu\ input}$ = (82.21 / 453.59)/(1945250 x 10^{-6})
$E_{lb/MMBtu\ input}$ = 0.093 lb/MMBtu input

Using lower heat value

$E_{lb/MMBtu\ input}$ = (82.21 / 453.59)/(1806821 x 10^{-6})
$E_{lb/MMBtu\ input}$ = 0.100 lb/MMBtu input

$E_{lb/MMBtu\ output}$ = (82.21 / 453.59)/(1615589 x 10^{-6})
$E_{lb/MMBtu\ output}$ = 0.112 lb/MMBtu output

$E_{g/kg}$ = 82.21 /((273.3 x 0.4536) / (1 + 20.8 /100))
$E_{g/kg}$ = 0.801 g/kg

$E_{g/hr}$ = 82.21 / (2817 / 60)
$E_{g/hr}$ = 1.75 g/hr

$E_{g/hr\ 10{,}000\ Btu}$ = 82.21 / ((2817 / 60) x (1615589 /10,000))

$E_{g/hr\ 10{,}000\ Btu}$ = 0.01 g/hr 10,000 Btu

First hour emissions:

$E_{g/kg}$ = -0.02 /((14.9961 x 0.4536) / (1 + 20.8 /100))
$E_{g/kg}$ = -0.004 g/kg

$E_{g/hr}$ = -0.02 / (60 / 60)

η_{del} – Delivered Efficiency, %
Test Method 28 WHH section 13.5.4

$$\eta_{del} = (Q_{out} / Q_{in}) \times 100$$

$$\eta_{delLHV} = (Q_{out} / Q_{inLHV}) \times 100$$

Sample calculation:

η_{del} = (1615589 / 1945250) x 100

η_{del} = 83.05 %

η_{delLHV} = (1615589 / 1806821) x 100

η_{delLHV} = 89.42 %

E_{avg}, η_{avg} – Weighted Average Emissions and Efficiency, g/kg, %
Test Method 28 WHH section 13.6.1

$$E_{avg} = \sum E_i \times F_i$$

$$\eta_{avg} = \sum \eta_i \times F_i$$

Sample calculation for emissions (g/kg) seasonal use and lower heating value:

E_{avg}= 0.80 x 0.175 + 0.62 x 0.275 + 0.71 x 0.450 + 0.59 x 0.100

E_{avg}= 0.7 g/kg

Sample calculation for efficiency year round use and high heating value:

η_{avg}= 83.05 x 0.437 + 80.18 x 0.238 + 86.30 x 0.275 + 85.95 x 0.050

η_{avg}= 83.4 %

Average Btu/hr for 8 Hour Burn Time, Btu/hr

$$\frac{Btu}{hr} = X1 + \{(8 - Y1) \times [(X2 - X1)/(Y2 - Y1)]\}$$

Where:

Y1	=	Test duration just above 8 hours
Y2	=	Test duration just below 8 hours
X1	=	Actual load for duration Y1
X2	=	Actual load for duration Y2

Sample calculation:

Btu/hr = 108585 + {(8 - 15.1) x [(235938 - 108585) / (6.98333 - 15.13)]}

Btu/hr = 220051 for 8 hour burn time