Certification Test Report
Non-Confidential Business Information (Non-CBI)

Central Boiler, Inc. and WoodMaster Inc. (an affiliate of Central Boiler, Inc.)
Wood-Fired Hydronic Heater
Model: Classic Edge 960, CleanFire 900

Prepared for:	Central Boiler, Inc. 20502 160th Street Greenbush, MN 56726
Prepared by:	OMNI-Test Laboratories, Inc. 13327 NE Airport Way Portland, OR 97230 (503) 643-3788
Test Period:	12/9/2020 – 12/21/2020
Report Date:	February 17, 2021
Report Revision Date:	November 2, 2021
Report Number:	0117WB041E

All data and information contained in this report are confidential and proprietary to Central Boiler, Inc. and WoodMaster Inc. Its significance is subject to the adequacy and representative character of the samples and to the comprehensiveness of the tests, examinations, or surveys made. The contents of this report cannot be copied or quoted, except in full, without specific, written authorization from Central Boiler, Inc. and OMNI-Test Laboratories, Inc. No use of the OMNI-Test Laboratories, Inc. name, logo, or registered mark (O-TL) is permitted, except as expressly authorized by OMNI-Test Laboratories, Inc. in writing.

- Document Edition # 001 (11/02/21) -

AUTHORIZED SIGNATORIES

This report has been reviewed and approved by the following authorized signatories:

Evaluator:

Bruce Davis, Testing Manager
OMNI-Test Laboratories, Inc.

TABLE OF CONTENTS

PREFACE ..... (3 pages)

1. INTRODUCTION/APPLIANCE DESCRIPTION/PHOTOGRAPHS/DRAWINGS 4
   - Introduction 5
   - Individual Run Summary 6
   - Appliance Description 7
   - Photographs 8
   - Test Equipment Schematic 11

2. QUALITY ASSURANCE/QUALITY CONTROL 12
   - Sample Analysis 14
   - Calibrations 32

3. OWNER'S MANUAL 52

4. TEST DATA BY RUN 250
   - Run 1 253
   - Run 2 284
   - Run 3 322
   - Run 4 463

5. TESTING PROCEDURES AND RESULTS 539

   Summary Tables
   - Table 1a – Data Summary Part A 540
   - Table 1b – Data Summary Part B 540
   - Table 1c – Hang Tag Information 541
   - Table 2b – Year-Round Use Weighting 541
   - Test Results and Discussion 542

6. EXAMPLE CALCULATIONS 543

Appendix A. Firebox Volume

Appendix B. Revision History

Section 1

Introduction/Appliance Description/Photographs/Drawings

INTRODUCTION

Central Boiler, Inc. retained OMNI-Test Laboratories, Inc. (*OMNI*) to perform certification emissions testing on the Classic Edge 960, CleanFire 900 boiler in accordance with U.S. EPA 40 CFR Part 60, Subpart QQQQ – Standards of Performance for New Residential Hydronic Heaters and Forced-Air Furnaces. The Classic Edge 960, CleanFire 900 furnace when tested with Maple cordwood meets the 2020 particulate matter emission limit of 0.15 lbs/mmBtu heat output per individual heat output category.

Test Number	Output BTU/Hr.	Particulate Emissions lb/mmBtu Output	Delivered Efficiency (% HHV)
Run 3 / CAT I	47,368	0.06	88.2
Run 4 / CAT II	89,966	0.05	84.1
Run 2 / CAT III	189,109	0.07	82.9
Run 1 / CAT IV	378,339	0.07	83.8

The testing was performed at *OMNI*'s testing facility in Portland, Oregon. The unit was received in good condition and logged in on December 4, 2020 then assigned and labeled with *OMNI* ID #2430. *OMNI* representatives Bruce Davis conducted the certification testing and completed all testing by December 21, 2020.

The unit was conditioned for 48 hours prior to testing by operating it at Category I, and II heat output rates.

The testing method used is composed of four distinct aspects:

- **Particulate Matter Emissions**: Particulate matter sampling using a dilution tunnel via ASTM E2618-13, and ASTM E2515-11
- **Delivered Efficiency**: Using entering and exiting water temperature differences along with measured flow rate to determine useful heat output.
- **Thermal Efficiency and CO Emissions**: Measured using sections 13.7 through 13.10 of CSA B415-10.
- **Operation**: As dictated by ASTM E2618, the appliance is brought to operating temperature before adding the test fuel charge, providing for a hot-to-hot test cycle with measurements taken under constant heat draw conditions within pre-determined ranges. There is no attempt to modulate heat demand to simulate an indoor thermostat cycling on and off in response to changes in the indoor environment.

Four test categories are used within the "Operation" scope:

- **Category I**: Heat Output less than 15% of Manufacturer's Rated Heat Output Capacity
- **Category II**: Heat Output 16 To 24% of Manufacturer's Rated Heat Output Capacity
- **Category III**: Heat Output 25 To 50% of Manufacturer's Rated Heat Output Capacity
- **Category IV**: Manufacturer's Rated Heat Output Capacity

This test report shall not be reproduced, except in full, without written approval from *OMNI*. The test results presented herein apply only to the specific appliance tested.

INDIVIDUAL RUN SUMMARIES – Certification Testing

Run 1 - Test procedures followed to produce a Category IV burn; heat draw was adjusted to approximately 400,000 BTU's. Observed burn rate was calculated at 23.82 kg/h. Emissions results were calculated using particulate sampling from Maple cordwood, on a hot-to-hot cycle. Heat demand water temperature set to call for heat at 165 degrees Fahrenheit and to go off demand mode at 185 degrees Fahrenheit. Based on these findings the CAT IV test was deemed acceptable for inclusion into the weighted average. Acceptable proportional rates are based on 10-minute sample intervals, Data was reduced to 10-minute intervals to show acceptability. No sampling anomalies occurred, this test run was determined to be valid for inclusion in the weighted average.

Run 2 - Test procedures followed to produce a Category III burn; heat draw was adjusted to approximately 189,109 BTU's. Heat demand water temperature set to call for heat at 165 degrees Fahrenheit and to go off demand mode at 185 degrees Fahrenheit. Observed burn rate was calculated at 12.03 kg/h. Emissions results were calculated using particulate sampling from Maple cordwood, on a hot-to-hot cycle. Negative filter weights were found on train A, a positive weight is shown on the O-ring that indicates material transfer. There is no indication of actual filter loss. No sampling anomalies occurred, this test run was determined to be valid for inclusion in the weighted average.

Run 3 - Test procedures followed to produce a Category I burn; heat draw was adjusted to approximately 47,368 BTU's. Heat demand water temperature set to call for heat at 165 degrees Fahrenheit and to go off demand mode at 185 degrees Fahrenheit. Observed burn rate was calculated at 2.83 kg/h. Emissions results were calculated using particulate sampling from Maple cordwood, on a hot-to-hot cycle. Negative filter weights were found on train A and B, a positive weight is shown on the O-rings that indicates material transfer. There is no indication of actual filter loss. Acceptable proportional rates are based on 10-minute sample intervals, Data was reduced to 10-minute intervals to show acceptability. No sampling anomalies occurred, this test run was determined to be valid for inclusion in the weighted average.

Run 4 - Test procedures followed to produce a Category II burn; heat draw was adjusted to approximately 89,966 BTU's. Heat demand water temperature set to call for heat at 165 degrees Fahrenheit and to go off demand mode at 185 degrees Fahrenheit. Observed burn rate was calculated at 5.59 kg/h. Emissions results were calculated using particulate sampling from Maple cordwood, on a hot-to-hot cycle. Negative filter weights were found on train A, a positive weight is shown on the O-ring that indicates material transfer. There is no indication of actual filter loss. Acceptable proportional rates are based on 10-minute sample intervals, Data was reduced to 10-minute intervals to show acceptability. No sampling anomalies occurred, this test run was determined to be valid for inclusion in the weighted average.

APPLIANCE DESCRIPTION

The Classic Edge 960 and CleanFire 900 are wood fired outdoor hydronic heaters. It is designed to heat and circulate water in a closed loop, supplying energy to an existing system. Its heavy gauge steel structure consists of a large, roughly rectangular firebox constructed of either carbon steel or titanium enhanced stainless steel and is surrounded by a water jacket with an integrated heat exchanger. The unit is well insulated and protected by an outer sheet metal skin designed for outdoor installation.

Combustion air is regulated by a blower and multiple dampers which supply air to various parts of the firebox. Airflow through the firebox is "downdraft." This means that when operating properly, this design gasifies the wood fuel in the upper portion of the firebox and burns this gas below the firebox in the Gasification Chamber. Flue gasses are routed through the heat exchanger and exit through an 8" flue opening at the rear of the unit.

The Classic Edge 960, CleanFire 900 responds to heat demand by cycling the combustion blower on and off depending on water temperature. Combustion air dampers actuate in response to combustion gas temperature in order to promote low emissions output and efficient operation. The water temperature set point is user adjustable.

Other features of the Classic Edge 960, CleanFire 900 include:

- Overtemperature protection
- Atmospheric pressure vent for water circuit
- Network-enabled temperature logging
- Gasification chamber access door

The firebox of the Classic Edge 960, CleanFire 900 is approximately 40.0" deep, 31.5" wide, and 43.6" high. Firebox volume is 32.0 ft^3. The dry weight of the unit is 2714 lb and the approximate capacity of the water jacket is 420 gallons.

Central Boiler, Inc.
Classic Edge 960, CleanFire 900

Appliance Front/Right

Appliance Front/Left

Appliance Back

Typical Preburn Fuel

Run 1 Fuel

Run 1 Fuel – Loaded

Run 2 Fuel

Run 2 Fuel – Loaded

Run 3 Fuel

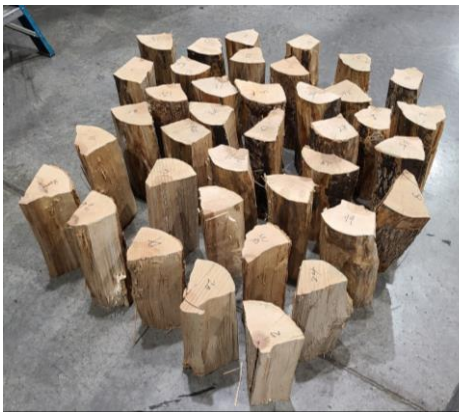

Run 3 Fuel – Loaded

Run 4 Fuel

Run 4 Fuel – Loaded

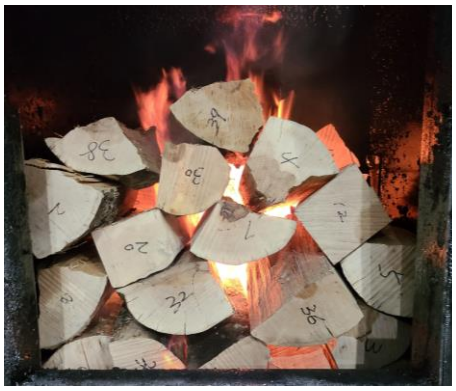

Test Equipment Schematic

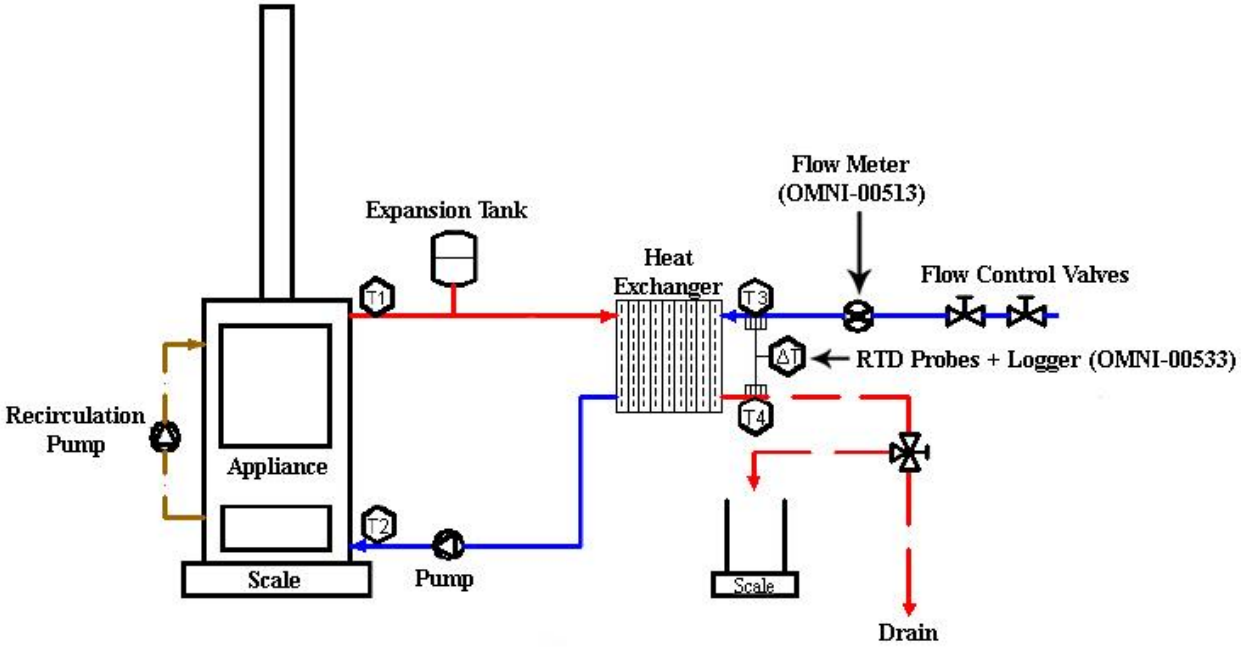

Section 2

Quality Assurance/Quality Control

QUALITY ASSURANCE/QUALITY CONTROL

OMNI follows the guidelines of ISO/IEC 17025, "General Requirements for the Competence of Testing and Calibration Laboratories," and the quality assurance/quality control (QA/QC) procedures found in *OMNI*'s Quality Assurance Manual.

OMNI's scope of accreditation includes, but is not limited to, the following:

- ANSI (American National Standards Institute) for certification of product to safety standards.
- To perform product safety testing by the International Accreditation Service, Inc. (formerly ICBO ES) under accreditation as a testing laboratory designated TL-130.
- To perform product safety testing as a "Certification Organization" by the Standards Council of Canada (SCC).
- Serving as a testing laboratory for the certification of wood heaters by the U.S. Environmental Protection Agency.

This report is issued within the scope of *OMNI*'s accreditation. Accreditation certificates are available upon request.

The manufacturing facilities and quality control system for the production of the Classic Edge 960, and CleanFire 900 at Central Boiler's and WoodMaster's manufacturing facility were evaluated to determine if sufficient to maintain conformance with OMNI's requirements for product certification. OMNI has concluded that the manufacturing facilities, processes, and quality control system are adequate to produce the appliance congruous with the standards and model codes to which it was evaluated.

This report shall not be reproduced, except in full, without the written approval of OMNI-Test Laboratories, Inc.

Sample Analysis

Analysis Worksheets

Tared Filter, Probe, & O-Ring Data

OMNI-Test Laboratories, Inc.

Wood Heater Run Sheets

Client: Central Boiler. WoodMaster Project Number: 0117WB041E Run Number: 1
Model: Edge 960, CleanFire 900 Tracking Number: 2430 Date: 12/09/2020
Test Crew: BD TT RT
OMNI Equipment ID numbers:

ASTM E2515 Lab Sheet

Assembled By: Tony Tong

Date/Time in Dessicator: 12/10/2020, 10:00

	Weighing #1	Weighing #2	Weighing #3	Weighing #4	Weighing #5
	Date/Time: 12/15/2020 9:00	Date/Time: 12/16/2020 13:30	Date/Time:	Date/Time:	Date/Time:
	R/H %: 19.1	R/H %: 21.0	R/H %:	R/H %:	R/H %:
	Temp: 65.4	Temp: 68.3	Temp:	Temp:	Temp:
	200 mg Audit: 200.0	200 mg Audit: 200.0	200 mg Audit:	200 mg Audit:	200 mg Audit:
	2 g Audit: 2000.3	2 g Audit: 2000.0	2 g Audit:	2 g Audit:	2 g Audit:
	100 g Audit: 99998.2	100 g Audit 99998.1	100 g Audit	100 g Audit	100 g Audit
	Initials: TT	Initials: TT	Initials:	Initials:	Initials:

Train	Element	ID #	Tare (mg)	Weight (mg)	Weight (mg)	Weight (mg)	Weight (mg)	Weight (mg)
Train A First Hour	Front Filter	E101	120.3	120.8	120.9			
	Rear Filter	E108	119.9	121.5	121.7			
A	Front Filter	E103	119.6	121.1	120.9			
A	Front Filter	E110	119.7	120.8	120.7			
A	Front Filter	E114	119.1	120.1	119.9			
A	Front Filter	E118	120.5	122.6	122.4			
A	Front Filter	E120	119.5	119.9	120.0			
A	Front Filter	E123	119.6	119.3	119.5			
A	Front Filter	E125	119.3	120.5	120.3			
A	Front Filter	E129	119.8	120.6	120.7			
A	Front Filter	E130	119.9	120.8	120.9			
A	Front Filter	E132	119.4	122.4	122.6			

Technician Signature: Tony Tong Date: 01/07/2021

OMNI-Test Laboratories, Inc.

Wood Heater Run Sheets

Client: Central Boiler. WoodMaster Project Number: 0117WB041E Run Number: 1
Model: Edge 960, CleanFire 900 Tracking Number: 2430 Date: 12/09/2020
Test Crew: BD TT RT
OMNI Equipment ID numbers:

ASTM E2515 Lab Sheet

Assembled By: Tony Tong

Date/Time in Dessicator: 12/10/2020, 10:00

	Weighing #1	Weighing #2	Weighing #3	Weighing #4	Weighing #5
	Date/Time: 12/15/2020 9:00	Date/Time: 12/16/2020 13:30	Date/Time: 01/04/2021 8:20	Date/Time: 01/06/2021 8:06	Date/Time: 01/07/2021 8:06
	R/H %: 19.1	R/H %: 21.0	R/H %: 13.6	R/H %: 10.1	R/H %: 15.1
	Temp: 65.4	Temp: 68.3	Temp: 63.5	Temp: 66.0	Temp: 66.5
	200 mg Audit: 200.0	200 mg Audit: 200.0	200 mg Audit:	200 mg Audit:	200 mg Audit:
	2 g Audit: 2000.3	2 g Audit: 2000.0	2 g Audit:	2 g Audit:	2 g Audit:
	100 g Audit: 99998.2	100 g Audit 99998.1	100 g Audit 99998.5	100 g Audit 99998.1	100 g Audit 99997.9
	Initials: TT	Initials: TT	Initials: TT	Initials: TT	Initials: TT

Train	Element	ID #	Tare (mg)	Weight (mg)	Weight (mg)	Weight (mg)	Weight (mg)	Weight (mg)
A	Rear Filter	E104	119.3	119.7	119.9			
A	Rear Filter	E111	120.8	121.0	121.0			
A	Rear Filter	E124	117.9	118.5	118.5			
A	Rear Filter	E128	119.4	121.9	121.0			
A	Probe	22	114341.0	114342.0	114341.5	114341.9	114341.1	114340.9
A	O-Ring	S045	4118.9	4119.9	4120.0			
A	First Hour O-Ring	S044	4116.1	4117.4	4117.4			
A	First Hour Probe	18	114400.2	114462.0	114451.9	114401.6	114401.1	114400.7

Technician Signature: Tony Tong Date: 01/07/2021

OMNI-Test Laboratories, Inc.

Wood Heater Run Sheets

Client: Central Boiler. WoodMaster Project Number: 0117WB041E Run Number: 1
Model: Edge 960, CleanFire 900 Tracking Number: 2430 Date: 12/09/2020
Test Crew: BD TT RT
OMNI Equipment ID numbers:

ASTM E2515 Lab Sheet

Assembled By: Tony Tong

Date/Time in Dessicator: 12/10/2020, 10:00

	Weighing #1	Weighing #2	Weighing #3	Weighing #4	Weighing #5
Date/Time:	01/07/2021 8:00	01/07/2021 15:00			
R/H %:	15.1	12.6			
Temp:	66.5	68.9			
200 mg Audit:					
2 g Audit:					
100 g Audit:	99997.9	99998.2			
Initials:	TT	TT			

Train	Element	ID #	Tare (mg)	Weight (mg)	Weight (mg)	Weight (mg)	Weight (mg)	Weight (mg)
A	Rear Filter							
A	Rear Filter							
A	Rear Filter							
A	Rear Filter							
A	Probe							
A	O-Ring							
A	First Hour O-Ring							
A	First Hour Probe	18	114400.2	114400.7	114400.7			

Technician Signature: Tony Tong Date: 01/07/2021

OMNI-Test Laboratories, Inc.

Wood Heater Run Sheets

Client: Central Boiler. WoodMaster Project Number: 0117WB041E Run Number: 1
Model: Edge 960, CleanFire 900 Tracking Number: 2430 Date: 12/09/2020
Test Crew: BD TT RT
OMNI Equipment ID numbers:

ASTM E2515 Lab Sheet

Assembled By: Tony Tong

Date/Time in Dessicator: 12/10/2020, 10:00

	Weighing #1	Weighing #2	Weighing #3	Weighing #4	Weighing #5
Date/Time:	12/15/2020 9:00	12/16/2020 13:30			
R/H %:	19.1	21.0			
Temp:	65.4	68.3			
200 mg Audit:	200.0	200.0			
2 g Audit:	2000.3	2000.0			
100 g Audit:	99998.2	99998.1			
Initials:	TT	TT			

Train	Element	ID #	Tare (mg)	Weight (mg)	Weight (mg)	Weight (mg)	Weight (mg)	Weight (mg)
B	Front Filter	E105	119.9	121.1	121.2			
B	Front Filter	E109	120.1	120.7	120.7			
B	Front Filter	E112	119.4	120.3	120.3			
B	Front Filter	E115	119.7	119.7	119.7			
B	Front Filter	E117	118.9	120.1	120.1			
B	Front Filter	E119	119.1	119.7	119.7			
B	Front Filter	E122	118.5	119.2	119.3			
B	Front Filter	E126	119.8	121.0	120.8			
B	Front Filter	E131	119.3	119.5	119.6			
B	Front Filter	E133	119.0	120.9	121.0			
B	Front Filter	E135	119.8	121.5	121.6			
B	Front Filter							

Technician Signature: Tony Tong Date: 01/07/2021

OMNI-Test Laboratories, Inc.

Wood Heater Run Sheets

Client: Central Boiler. WoodMaster Project Number: 0117WB041E Run Number: 1
Model: Edge 960, CleanFire 900 Tracking Number: 2430 Date: 12/09/2020
Test Crew: BD TT RT
OMNI Equipment ID numbers:

ASTM E2515 Lab Sheet

Assembled By: Tony Tong

Date/Time in Dessicator: 12/10/2020, 10:00

Weighing #1	Weighing #2	Weighing #3	Weighing #4	Weighing #5
Date/Time: 12/15/2020 9:00	Date/Time: 12/16/2020 13:30	Date/Time: 01/04/2021 8:20	Date/Time: 01/06/2021 8:00	Date/Time: 01/07/2021 8:00
R/H %: 19.1	R/H %: 21.0	R/H %: 13.6	R/H %: 10.1	R/H %: 15.1
Temp: 65.4	Temp: 68.3	Temp: 63.5	Temp: 66.0	Temp: 66.5
200 mg Audit: 200.0	200 mg Audit: 200.0	200 mg Audit:	200 mg Audit:	200 mg Audit:
2 g Audit: 2000.3	2 g Audit: 2000.0	2 g Audit:	2 g Audit:	2 g Audit:
100 g Audit: 99998.2	100 g Audit 99998.1	100 g Audit 99998.5	100 g Audit 99998.1	100 g Audit 99997.9
Initials: TT	Initials: TT	Initials: TT	Initials: TT	Initials: TT

Train	Element	ID #	Tare (mg)	Weight (mg)	Weight (mg)	Weight (mg)	Weight (mg)	Weight (mg)
B	Rear Filter	E106	119.9	120.9	120.8			
B	Rear Filter	E113	119.3	120.9	121.0			
B	Rear Filter	E116	120.2	121.5	121.4			
B	Rear Filter	E121	119.4	119.9	119.9			
B	Rear Filter	E127	119.7	120.1	120.2			
B	Rear Filter	E134	119.4	119.6	119.5			
B	Rear Filter	E136	119.4	119.2	119.1			
B	Probe	21	114389.8	114391.3	114391.0	114391.5	114390.8	114390.6
B	O-Ring Set	S046	3342.3	3343.4	3343.6			
BG	Filter	E107	119.4	119.7	119.7			

Technician Signature: Tony Tong Date: 01/07/2021

OMNI-Test Laboratories, Inc.

ASTM E2780 Wood Heater Run Sheets

Client: Central Boiler Wood Masher Project Number: 0117WB041E Run Number: 2
Model: Edge 960 Classic 900 Tracking Number: 2430 Date: 12/10/2020
Test Crew: Bruce Davis, Tony Tong
OMNI Equipment ID numbers:

ASTM E2515 Lab Sheet

Assembled By: Tony Tong

Date/Time in Dessicator: 12/14/2020, 8:00

	Weighing #1	Weighing #2	Weighing #3	Weighing #4	Weighing #5
Date/Time:	12/15/2020 9:15	12/16/2020 11:30	12/17/2020 10:30		
R/H %:	19.1	14.3	14.2		
Temp:	65.4	67.2	66.7		
200 mg Audit:	200.0	200.0	200.1		
2 g Audit:	2000.3	2000.3	2000.2		
100 g Audit:	99998.2	99998.2	99998.3		
Initials:	TT	TT	TT		

Train	Element	ID #	Tare (mg)	Weight (mg)	Weight (mg)	Weight (mg)	Weight (mg)	Weight (mg)
A (First Hour)	Front Filter	E137	119.6	120.6	120.7	120.5		
	Rear Filter	E138	119.9	120.2	119.9	120.0		
	Probe	8	115597.4	115598.8	115598.4	115598.4		
	O-Ring Set	~~S050~~ S047	~~3363.3~~ +20.4	3364.0	3363.8			
A (Remainder)	Front Filter	E139	120.4	130.7	130.6			
	Rear Filter	E140	120.2	119.7	119.5			
	Probe	15	1143422	1143447	1143444	1143443		
	O-Ring Set	S048	3378.0	3382.5	3381.0	3381.0		
B	Front Filter	E141	119.2	128.9	128.5	128.7		
	Rear Filter	E142	120.3	120.6	120.7			
	Probe	16	1142669	1142701	1142699	1142700		
	O-Ring Set	S049	3329.1	3333.1	3332.1	3332.3		
BG	Filter	E143	119.0	119.1	119.2			

Technician Signature: [signature] Date: 12/12/20

ASTM E2780 Wood Heater Run Sheets

Client: Central Boiler WoodMaster Project Number: 0117WB041E Run Number: 3
Model: Edge 960 Clean Fire 900 Tracking Number: 2430 Date: 12/14/2020
Test Crew: Bruce Davis, Tony Tong
OMNI Equipment ID numbers:

ASTM E2515 Lab Sheet

Assembled By: Tony Tong

Date/Time in Dessicator: 12/17/2020 8:00

	Weighing #1	Weighing #2	Weighing #3	Weighing #4	Weighing #5
Date/Time:	12/21/2020 8:30	12/22/20 9:10	12/23/2020 10:45	12/24/20 8:00	01/04/2021 8:20
R/H %:	10.3	19.3	15.0	9.5	13.6
Temp:	63.3	65.8	66.3	69.0	63.5
200 mg Audit:	200.1	199.9	200.2	200.1	200.1
2 g Audit:	2000.3	2000.3	2000.2	2000.3	2000.3
100 g Audit:	99998.4	99997.8	99997.8	99997.9	99997.8
Initials:	TT	TT	TT	TT	TT

Train	Element	ID #	Tare (mg)	Weight (mg)	Weight (mg)	Weight (mg)	Weight (mg)	Weight (mg)
A (First Hour)	Front Filter	E144	119.4	123.7	123.6	123.4		
	Rear Filter	E152 ~~E148~~	119.0	118.8	118.5	118.3		
	Probe	20	114254.2	114255.4		114254.7	114258.8	
	O-Ring Set	S051	4092.8	4094.6	4094.6			
A (Remainder)	Front Filter	E146	119.4	128.5	127.5	127.4		
	Rear Filter	E147	118.2	119.7	119.0	118.9		
	Probe	34	115867.6	115870.0		115869.3	115869.3	
	O-Ring Set	S058	3469.5	3470.8	3471.0			
B	Front Filter	E148	120.0	131.8	130.9	130.5	130.1	130.3
	Rear Filter	E149	119.9	120.7	120.4	119.7	119.6	
	Probe	59	117786.4	117789.4		117788.5	117788.7	
	O-Ring Set	S060	4100.9	4104.4	4104.3			
BG	Filter	E150	120.0	120.5	120.9	120.3	120.2	

Technician Signature: _____ Date: 1/4/21

OMNI-Test Laboratories, Inc. **ASTM E2780 Wood Heater Run Sheets**

Client: Central Boiler Wood Master Project Number: 0117WB041E Run Number: 4

Model: Edge 960 Clean Fire 960 Tracking Number: 2430 Date: 12/21/2020

Test Crew: Bruce Davis, Tony Tong

OMNI Equipment ID numbers:

ASTM E2515 Lab Sheet

Assembled By: Tony Tong

Date/Time in Dessicator: 12/23/2020, 7:40

	Weighing #1	Weighing #2	Weighing #3	Weighing #4	Weighing #5
Date/Time:	12/24/2020 8:00	01/04/2021 8:00	01/06/2021 8:00	01/07/2021 8:00	01/07/2021 15:00
R/H %:	9.5	13.6	10.1	15.1	12.6
Temp:	69.0	63.5	66.0	66.5	68.9
200 mg Audit:	200.1	200.1	200.2	200.1	
2 g Audit:	2000.3	2000.3	2000.2	2000.3	
100 g Audit:	99997.9	99998.5	99998.1	99997.9	99998.2
Initials:	TT	TT	TT	TT	TT

Train	Element	ID #	Tare (mg)	Weight (mg)	Weight (mg)	Weight (mg)	Weight (mg)	Weight (mg)
A (First Hour)	Front Filter	E155	120.0	119.9	120.2	120.2		
	Rear Filter	E156	119.1	117.0	117.3	117.1		
	Probe	56	118613.3	118614.0	118614.4	118614.2		
	O-Ring Set	S054	3350.1	3352.9	3353.5	3352.1	3352.1	
A (Remainder)	Front Filter	E153	118.9	125.6	126.2	125.8	125.9	
	Rear Filter	E154	119.1	118.8	119.6	119.3	119.3	
	Probe	37	114465.5	114467.9	114468.8	114468.3	114467.7	114467.8
	O-Ring Set	S053	3310.9	3313.2	3312.3	3312.1		
B	Front Filter	E157	118.7	125.5	125.9	125.6	125.7	
	Rear Filter	E158	119.3	119.7	120.4	119.9	120.1	
	Probe	58	117066.6	117069.0	117069.9	117069.4	117069.2	
	O-Ring Set	S055	3507.3	3508.8	3508.7			
BG	Filter	E159	118.5	118.8	119.0			

Technician Signature: Date: 1/7/21

Tare Sheet: (check one) Probes_____ 47mm Filters ✓ 100mm Filters_____ O-Ring Pair_____

Prepared By: Tommy Tong Balance ID #: OMNI-00637 Thermohygrometer ID #: OMNI-00592 Audit Weight ID #/Mass: OMNI-00283A/200mg

Placed in Dessicator: Date: 11/16/2020 Time: 9:00 ID #	Date: 11/17/2020 Time: 9:15 RH %: 14.1 T (°F): 66.3 Audit: 200.0	Date: 11/18/2020 Time: 8:00 RH %: 14.5 T (°F): 66.3 Audit: 200.1	Date: Time: RH %: T (°F): Audit:	Date: Time: RH %: T (°F): Audit:	Date Used	Project Number	Run No.
E101	120.3	120.3 ✓			12/09/2020	0117WB0411E	1
E102	119.9	120.0 ✓			Not Used		
E103	119.6	119.6 ✓			12/09/2020	0117WB0411E	1
E104	119.4	119.3 ✓					
E105	119.8	119.9 ✓					
E106	119.9	119.9 ✓					
E107	119.5	119.4 ✓					
E108	120.0	119.9 ✓					
E109	120.1	120.1 ✓					
E110	119.7	119.7 ✓					
E111	120.9	120.8 ✓					
E112	119.3	119.4 ✓					
E113	119.5	119.3 ✓					
E114	119.0	119.1 ✓					
E115	119.7	119.7 ✓					
E116	120.3	120.2 ✓					
E117	119.1	118.9 ✓					
E118	120.5	120.5 ✓					
E119	119.3	119.1 ✓					
E120	119.6	119.5 ✓					
	Initials: TT	Initials: TT	Initials:	Initials:			

Final Technician Signature: Tommy Tong Date: 11/18/2020 Evaluator signature: [signature]

Tare Sheet: (check one) Probes_____ 47mm Filters ✓ 100mm Filters_____ O-Ring Pair_____

Prepared By: Tony Tong Balance ID #: OMNI-00637 Thermohygrometer ID #: OMNI-00592 Audit Weight ID #/Mass: OMNI-00283A/200 mg

Placed in Dessicator: Date: 11/16/2020 Time: 9:00 ID #	Date: 11/17/2020 Time: 9:15 RH %: 14.1 T (°F): 66.3 Audit: 200.0	Date: 11/18/2020 Time: 8:00 RH %: 14.5 T (°F): 66.3 Audit: 200.1	Date: Time: RH %: T (°F): Audit:	Date: Time: RH %: T (°F): Audit:	Date Used	Project Number	Run No.
E121	119.4	119.4			12/09/2020	0117WB041E	1
E122	118.7	118.5					
E123	119.6	119.6					
E124	118.0	117.9					
E125	119.3	119.3					
E126	119.7	119.8					
E127	119.7	119.7					
E128	119.4	119.4					
E129	119.7	119.8					
E130	119.9	119.9					
E131	119.1	119.3					
E132	119.5	119.4					
E133	118.9	119.0					
E134	119.3	119.4					
E135	119.9	119.8					
E136	119.3	119.4					
E137	119.5	119.6			12/10/2020	0117WB041E	2
E138	119.8	119.9					
E139	120.5	120.4					
E140	120.1	120.2					
	Initials: TT	Initials: TT	Initials:	Initials:			

Final Technician Signature: Tony Tong Date: 11/18/2020 Evaluator signature:

Control No. P-SFDP-0002.xls, Effective date: 2/1/2017

Tare Sheet: (check one) Probes_____ 47mm Filters ✓ 100mm Filters_____ O-Ring Pair_____

Prepared By: Tommy Tang Balance ID #: OMNI-00637 Thermohygrometer ID #: OMNI-00592 Audit Weight ID #/Mass: OMNI-00283/A200mg

Placed in Dessicator: Date: 11/30/2020 Time: 8:45 ID #	Date: 12/01/2020 Time: 9:05 RH %: 8.9 T (°F): 64.5 Audit: 200.1	Date: 12/02/2020 Time: 7:50 RH %: 10.2 T (°F): 64.9 Audit: 200.2	Date: Time: RH %: T (°F): Audit:	Date: Time: RH %: T (°F): Audit:	Date Used	Project Number	Run No.
E141	119.3	119.2			12/10/2020	0117WB041E	2
E142	120.5	120.3			↓	↓	↓
E143	119.2	119.0			↓	↓	↓
E144	119.6	119.4			12/14/2020	0117WB041E	3
~~E145~~	~~120.1~~						
E146	119.4	119.4			12/14/2020	0117WB041E	3
E147	118.4	118.2			↓	↓	↓
E148	120.0	120.0			↓	↓	↓
E149	120.1	119.9			↓	↓	↓
E150	120.0	120.0			↓	↓	↓
E151	119.3	119.3			Not Used		
E152	118.8	119.0			12/14/2020	0117WB041E	3
E153	118.8	118.9			12/21/20	↓	4
E154	119.3	119.1			↓	↓	4
E155	119.9	120.0			12/21/20	0117WB041E	4
E156	119.1	119.1			↓	↓	↓
E157	118.9	118.7			↓	↓	↓
E158	119.1	119.3			↓	↓	↓
E159	118.4	118.5					
E160	120.7	120.7					
	Initials: TT	Initials: TT	Initials:	Initials:			

Final Technician Signature: Tommy Tang Date: 12/02/2020 Evaluator signature: BD

Tare Sheet: (check one) Probes ✓ 47mm Filters_____ 100mm Filters_____ O-Ring Pair_____

Prepared By: Tony Tong Balance ID #: OMNI-00637 Thermohygrometer ID #: OMNI-00592 Audit Weight ID #/Mass: OMNI-00283A/100g

Placed in Dessicator: Date: 11/16/2020 Time: 15:00	Date: 12/01/2020 Time: 8:30 RH %: 8.9 T (°F): 64.5	Date: 12/02/2020 Time: 8:15 RH %: 10.2 T (°F): 64.9	Date: 12/03/2020 Time: 11:10 RH %: 6.4 T (°F): 64.7	Date: 12/07/2020 Time: 7:40 RH %: 4.5 T (°F): 61.1	Date Used	Project Number	Run No.
ID #	Audit: 99997.8	Audit: 99998.1	Audit: 99998.0	Audit: 99998.0			
34	115867.4	115867.8	115867.6		12/14/2020	0117WB041E	3
35	114326.1	114326.5	114326.0	114326.1			
37	114465.3	114465.5			12/21/20	0117WB041E	4
38	114150.6	114150.5					
53	118271.7	118272.1	118271.6	118271.6	↓	↓	↓
56	118613.4	118613.3			12/21/20	0117WB041E	4
58	117066.6	117066.6			↓	↓	↓
59	117786.2	117786.4			12/14/2020	0117WB041E	3
18	114400.4	114400.7	114400.0	114400.2	12/09/2020	0117WB041E	1
21	114390.1	114390.4	114389.6	114389.8	↓	↓	↓
22	114341.3	114341.6	114340.9	114341.0	↓	↓	↓
	Initials: TT	Initials: TT	Initials: TT	Initials: TT			

Final Technician Signature: Tony Tong Date: 12/07/2020 Evaluator signature: _____

Tare Sheet: (check one) Probes ✓ 47mm Filters_____ 100mm Filters_____ O-Ring Pair_____

Prepared By: Tony Tong Balance ID #: OMNI—00637 Thermohygrometer ID #: OMNI—00592 Audit Weight ID #/Mass: OMNI—002834 / 100 g

Placed in Dessicator: Date: 11/16/2020 Time: 8:40

ID #	Date: 11/17/2020 Time: 9:00 RH %: 14.1 T (°F): 66.3 Audit: 99998.2	Date: 11/18/2020 Time: 8:40 RH %: 14.5 T (°F): 66.3 Audit: 99998.0	Date: 11/19/2020 Time: 8:10 RH %: 9.0 T (°F): 66.3 Audit: 99997.7	Date: 11/23/2020 Time: 7:45 RH %: 9.5 T (°F): 62.7 Audit: 99997.8	Date Used	Project Number	Run No.
7	114982.4	114982.1	114981.7	114981.9			
8	115598.0	115597.6	115597.4		12/10/2020	0117WB041E	2
9	115696.6	115696.4					
11	114188.1	114188.0					
12	116285.2	116285.0					
13	114322.4	114322.0	114321.5	114321.8	Not Used		
18	116602.6	116402.4			12/09/2020	0117WB041E	1
20	114254.8	114254.4	114254.0	114254.2	12/14/2020	0117WB041E	3
23	114077.7	114077.4	114076.7	114077.1	Not Used		
24	114127.9	114127.8					
25	114300.7	114300.5					
27	114276.5	114276.6			Not Used		
	Initials: TT	Initials: TT	Initials: TT	Initials: TT			

Final Technician Signature: Tony Tong Date: 11/23/2020 Evaluator signature: BD

Tare Sheet: (check one) **Probes** ✓ **47mm Filters**____ **100mm Filters**____ **O-Ring Pair**____

Prepared By: Tony Tong Balance ID #: OMNI-00637 Thermohygrometer ID #: OMNI-00592 Audit Weight ID #/Mass: OMNI-00289A/100g

Placed in Dessicator: Date: 09/24/20 Time: 9:15	Date: 09/28/2020 Time: 17:00 RH %: 13.8 T (°F): 74.8	Date: 09/29/2020 Time: 17:20 RH %: 16.4 T (°F): 76.2	Date: Time: RH %: T (°F):	Date: Time: RH %: T (°F):	Date Used	Project Number	Run No.
ID #	Audit: 99997.9	Audit: 99998.0	Audit:	Audit:			
2	115015.8	115015.9 ✓					
OES3	114770.1	114770.0 ✓					
3	116012.2	116012.2 ✓					
4	114858.7	114858.7 ✓					
OES 4	114148.3	114148.3 ✓					
OES 5	113570.9	113571.0 ✓					
6	115348.6	115348.4 ✓					
OES 6	113711.5	113711.3 ✓					
14	114548.9	114548.9 ✓			Not Used		
15	114342.4	114342.2 ✓			12/10/2020	0117WB041E	2
16	114267.0	114266.9 ✓			↓	↓	↓
17	114563.1	114562.9 ✓					
	Initials: TT	Initials: TT	Initials:	Initials:			

Final Technician Signature: Tony Tong Date: 09/29/2020 Evaluator signature:

Control No. P-SFDP-0002.xls, Effective date: 2/1/2017

Tare Sheet: (check one) Probes_____ 47mm Filters_____ 100mm Filters_____ O-Ring Pair ✓

Prepared By: Tony Tong Balance ID #: OMNI-00637 Thermohygrometer ID #: OMNI-00592 Audit Weight ID #/Mass: OMNI-00283A/1g

Placed in Dessicator: Date: 11/04/20 Time: 10:30	Date: 11/05/20 Time: 15:30 RH %: 9.9 T (°F): 69.9	Date: 11/09/20 Time: 7:40 RH %: 9.4 T (°F): 61.5	Date: 11/10/20 Time: 7:45 RH %: 9.8 T (°F): 64.0	Date: 11/11/2020 Time: 9:00 RH %: 14.8 T (°F): 63.5	Date Used	Project Number	Run No.
ID #	Audit: 5000.0	Audit: 5000.0	Audit: 5000.1	Audit: 5000.1			
S033	4156.7	4156.3	4156.5 ✓				
S037	3309.5	3309.2	3309.2 ✓				
S038	3250.6	3250.3	3250.5 ✓				
S039	3333.8	3333.3	3333.3 ✓				
S040	3350.0	3349.5	3349.7 ✓				
S042	3356.9	3356.5	3356.5 ✓				
S043	3331.2	3330.8	3330.9 ✓				
S044	4116.5	4116.1	4116.1 ✓		12/09/2020	0117WB041E	1
S045	4119.1	4118.7	4118.9 ✓		↓	↓	↓
S046	3342.7	3341.8	3342.2 ✓	3342.3 ✓	↓	↓	↓
~~S047~~	~~4350.6~~	~~4350.3~~	~~4350.5~~		Not used		
S048	3378.0	3377.7	3378.1 ✓	3378.0 ✓	12/10/2020	0117WB041E	2
S049	3329.4	3329.0	3329.1 ✓		↓	↓	↓
S050	3363.8	3363.2	3363.3 ✓		↓	↓	↓
	Initials: TT	Initials: TT	Initials: TT	Initials: TT			

Final Technician Signature: Tony Tong Date: 11/11/2020 Evaluator signature:

Tare Sheet: (check one) **Probes**_____ **47mm Filters**_____ **100mm Filters**_____ **O-Ring Pair** ✓

Prepared By: Tom Tong Balance ID #: OMNI-00637 Thermohygrometer ID #: OMNI-00592 Audit Weight ID #/Mass: OMNI-00283A/5g

Placed in Dessicator: Date: 11/16/2020 Time: 9:30	Date: 11/17/2020 Time: 9:45 RH %: 14.1 T (°F): 66.3	Date: 11/18/2020 Time: 9:00 RH %: 14.5 T (°F): 66.3	Date: Time: RH %: T (°F):	Date: Time: RH %: T (°F):	Date Used	Project Number	Run No.
ID #	Audit: 5000.1	Audit: 5000.0	Audit:	Audit:			
S051	4092.9	4092.8 ✓			12/14/2020	0117WB041E	3
S052	3318.9	3318.7 ✓			Not Used		
S053	3311.0	3310.9 ✓			12/21/2020	0117WB041E	4
S054	3350.1	3350.1 ✓					
S055	3507.3	3507.3 ✓					
S056	3390.4	3390.6 ✓					
S057	3346.2	3346.1 ✓					
S058	3469.6	3469.5 ✓			12/14/2020	0117WB041E	3
S059	3302.8	3302.8 ✓					
	Initials: TT	Initials: TT	Initials:	Initials:			

Final Technician Signature: Tom Tong Date: 11/18/2020 Evaluator signature:

Control No. P-SFDP-0002.xls, Effective date: 2/1/2017

Tare Sheet: (check one) Probes_____ 47mm Filters_____ 100mm Filters_____ O-Ring Pair ✓

Prepared By: Tommy Tong Balance ID #: OMNI-00637 Thermohygrometer ID #: OMNI-00592 Audit Weight ID #/Mass: OMNI-00283A/5g

Placed in Dessicator: Date: 11/16/2020 Time: 9:30 ID #	Date: 11/18/2020 Time: 16:30 RH %: 11.0 T (°F): 68.9 Audit: 4999.9	Date: 11/19/2020 Time: 8:40 RH %: 9.0 T (°F): 66.3 Audit: 5000.1	Date: 11/23/2020 Time: 8:00 RH %: 9.5 T (°F): 62.7 Audit: 5000.0	Date: 11/25/2020 Time: 8:10 RH %: 5.1 T (°F): 64.7 Audit: 5000.0	Date Used	Project Number	Run No.
S060	4100.7	4100.9			12/14/2020	0117WB041E	3
S061	3515.1	3515.7	3515.4	3515.5			
S062	3324.1	3324.2					
S063	3373.9	3374.3	3373.9	3374.1			
S064	3348.8	3349.0					
S065	3413.2	3413.6	3413.4				
S066	3584.1	3584.7	3584.3	3584.3			
S067	3547.8	3548.2	3547.8	3547.7	Not Used		
	Initials: TT	Initials: TT	Initials: TT	Initials: TT			

Final Technician Signature: Tommy Tong Date: 11/25/2020 Evaluator signature: BD

Calibrations

ID #	Equipment Name/Description	Attachment Type
637	Balance, Analytical - Mettler Instrument	Calibration Certificate
283A	Weight Standard set	Calibration Certificate
132	Weight Standard, 10 lb. - WeightMaker	Calibration Log
650	Barometer	Calibration Certificate
296-T59	DeWalt 16' Tape Measure	Calibration Log
592	Hygrometer/Thermometer, Digital - Omega	Calibration Certificate
353	Scale, Platform – Fuel Scale	Calibration Log
356	Scale, Pro-Dec (5000 lbs.) - Avery Weigh-Tronix	Calibration Certificate
413	Dry Gas Meter	Calibration Log
419	Infrared gas analyzer	Manual Cover
325	Sampling Box, Automated Emissions - Apex XC-60	Calibration Log
326	Sampling Box, Automated Emissions - Apex XC-60	Calibration Log
431	Wood Moisture Meter Calibrator	Calibration Log
579	Thermo-Anemometer	Calibration Certificate

Certificate of Calibration

Certificate Number: **728321**

JJ Calibrations, Inc.
7724 SE Aspen Summit Drive
Portland, OR 97266-9217
Phone 503.786.3005
FAX 503.786.2994

OnSite

0723.01
Calibration

Omni-Test Laboratories
13327 NE Airport Way
Portland, OR 97230

PO: **200302**
Order Date: **07/09/2020**
Authorized By: **N/A**

Property #: **OMNI-00637**
User: **N/A**
Department: **N/A**
Make: **Mettler Toledo**
Model: **MS104TS/00**
Serial #: **B729400181**
Description: **Analytical Scale, 120g**
Procedure: **DCN 500887**
Accuracy: **±0.0005g**

Calibrated on: **07/09/2020**
*Recommended Due: **01/09/2021**
Environment: **20** °C **42** % RH
* As Received: **Within Tolerance**
* As Returned: **Within Tolerance**
Action Taken: **Calibrated**
Technician: **111**

Remarks: * Many factors may cause the unit to drift out of calibration before the recommended due date. Any reported error is the absolute value between the reference and the unit. Uncertainties include the effects of the unit.

Standards Used

Std ID	Manufacturer	Model	Nomenclature	Due Date	Trace ID
503A	Rice Lake	1mg-200g (Class 0)	Mass Set,	08/08/2020	702709

Measurement Data

Parameter / Measurement Description	Range	Unit	Reference	Min	Max	*Error	UUT	Uncertainty
Before/After								Accredited = ü
Force								
		g	10.00000	9.9995	10.0005	0.0001	9.9999 g	9.7E-05 ü
		g	30.00000	29.9995	30.0005	0.0000	30.0000 g	1.3E-04 ü
		g	60.00000	59.9995	60.0005	0.0000	60.0000 g	2E-04 ü
		g	90.00000	89.9995	90.0005	0.0002	90.0002 g	2.4E-04 ü
		g	120.00000	119.9995	120.0005	0.0001	120.0001 g	3E-04 ü

This instrument has been calibrated in accordance with the JJ Calibrations Quality Assurance Manual and is traceable to either the SI or to National Institute of Standards and Technology (NIST). The quality system and this certificate are in compliance with ANSI/NCSL Z540-1-1994, ISO/IEC 17025-2017, ISO 10012-1, the ISO 9000 family and QS 9000. The expanded uncertainties of measurements for this calibration are based upon 95% (2 sigma) confidence limits. Unless stated in the comments, certificates reflect the "Simple Acceptance Rule" as specified by JCGM 106:2012. Unless otherwise stated, a test accuracy ratio (TAR) of 4:1, if achievable, is maintained. The results reported herein apply only to the calibration of the item described above. This report may not be

Reviewer

3 Issued 07/15/2020 Rev # 15

Inspector

Certificate of Calibration

Certificate Number: **685888**

JJ Calibrations, Inc.
7007 SE Lake Rd
Portland, OR 97267-2105
Phone 503.786.3005
FAX 503.786.2994

Omni-Test Laboratories
13327 NE Airport Way
Portland, OR 97230

ACCREDITED
0723.01
Calibration

PO: **180188**
Order Date: 10/09/2018
Authorized By: **N/A**

Property #: OMNI-00283A
User: N/A
Department: N/A
Make: Troemner Inc
Model: 1mg-100g (Class F)
Serial #: 47883
Description: Mass Set, 21pc
Procedure: DCN 500901
Accuracy: Class F

Calibrated on: 10/26/2018
*Recommended Due: 10/26/2023
Environment: 20 °C 57 % RH
* As Received: Within Tolerance
* As Returned: Within Tolerance
Action Taken: Calibrated
Technician: **139**

Remarks: * Many factors may cause the unit to drift out of calibration before the recommended due date. Any reported error is the absolute value between the reference and the unit. Uncertainties include the effects of the unit.

This set meets Class F specifications.
Received and returned eight (8) masses in a black case secured by a rubber band.

Standards Used

Std ID	Manufacturer	Model	Nomenclature	Due Date	Trace ID
723A	Rice Lake	1mg-200g (Class 0)	Mass Set,	03/23/2019	668240
800A	Sartorius	MSA225W100DI	Analytical Balance	12/11/2018	663857

Measurement Data

Parameter / Measurement Description	Range Unit	Reference	Min	Max	[k]Error	UUT	Uncertainty
Before/After							Accredited = ✓
Mass							
Dot	200 mg	200.00030	199.4603	200.5403	0.0500	200.0503 mg	6.2E-01 ✓
	1 g	1.00000880	0.9991088	1.0009088	0.0000000	1.0000088 g	1E-03 ✓
	2 g	2.00001470	1.9989147	2.0011147	0.0003250	2.0003397 g	1.3E-03 ✓
	5 g	5.00000840	4.9985084	5.0015084	0.0000400	4.9999684 g	1.7E-03 ✓
	10 g	10.0000100	9.998010	10.002010	0.000245	9.999765 g	2.3E-03 ✓
Dot	20 g	20.0000140	19.996014	20.004014	0.000990	20.001004 g	4.6E-03 ✓
	50 g	49.9999660	49.989966	50.009966	0.000595	49.999371 g	1.1E-02 ✓
	100 g	100.000000	99.98000	100.02000	0.00194	99.99806 g	2.3E-02 ✓

JJ Calibrations, Inc. certifies that this instrument has been calibrated in accordance with the JJ Calibrations Quality Assurance Manual with the stated procedure using standards that are traceable to the National Institute of Standards and Technology (NIST), or other National Measurement Institutes (NMI's), or by using natural physical constants, intrinsic standards or ratio calibration techniques. The quality system and this certificate are in compliance with ANSI/NCSL Z540-1-1994, ISO/IEC 17025-2005, ISO 10012-1, the ISO 9000 family and QS 9000. The expanded uncertainties of measurements for this calibration are based upon 95% (2 sigma) confidence limits. Unless otherwise stated, a test accuracy ratio (TAR) of 4:1, if achievable, is maintained. The results reported herein apply only to the calibration of the item described above. This report may not be reproduced, except in full, without prior written consent of JJ Calibrations, Inc.
JJ Calibrations, Inc. quality system has been assessed and accredited to ISO/IEC 17025:2005.

Reviewer

3 Issued 10/29/2018 Rev # 15

Inspector

SCALE WEIGHT CALIBRATION DATA SHEET

Weight to be calibrated: 10 pounds

ID Number: OMNI-00132

Standard Calibration Weight: 10 pounds

ID Number: OMNI-00255

Scale Used: MTW-150K

ID Number: OMNI-00353

Date: 2/23/2018 By: B. Davis

Standard Weight (A) (Lb.)	Weight Verified (B) (Lb.)	Difference (A - B)	% Error
10.0	10.0	0.0	0

*Acceptable tolerance is 1%.

This calibration is traceable to NIST using calibrated standard weights.

Technician signature: _____ Date: 2/23/18

Certificate of Calibration

Certificate Number: **725761**

JJ Calibrations, Inc.
7724 SE Aspen Summit Drive
Portland, OR 97266-9217
Phone 503.786.3005
FAX 503.786.2994

Omni-Test Laboratories
13327 NE Airport Way
Portland, OR 97230

0723.01
Calibration

PO: **200299**
Order Date: 05/28/2020
Authorized By: **N/A**

Property #: **OMNI-00650**
User: **N/A**
Department: **N/A**
Make: **Control Company**
Model: **6530**
Serial #: **181062211**
Description: **Thermohygrometer / Barometer**
Procedure: **403406**
Accuracy: **±3%RH, ±.4°C(0.8°F), ±4mbar(0.12inHg)**

Calibrated on: 06/01/2020
*Recommended Due: 06/01/2021
Environment: **23** °C **41** % RH
* As Received: **Within Tolerance**
* As Returned: **Within Tolerance**
Action Taken: **Calibrated**
Technician: **146**

Remarks: * Many factors may cause the unit to drift out of calibration before the recommended due date. Any reported error is the absolute value between the reference and the unit. Uncertainties include the effects of the unit.

Standards Used

Std ID	Manufacturer	Model	Nomenclature	Due Date	Trace ID
644A	Thunder Scientific	1200	Two Pressure Humidity Generator	10/14/2020	710583

Measurement Data

Parameter / Measurement Description	Range Unit	Reference	Min	Max	ᵏError	UUT	Uncertainty
Before/After							Accredited = ✓
Humidity							
	%	25.0	22	28	1	26 %	8.1E-01 ✓
	%	50.0	47	53	3	47 %	8.1E-01 ✓
	%	75.0	72	78	3	72 %	8.1E-01 ✓
Temperature							
	°F	68.00	67.2	68.8	0.2	68.2 °F	1.2E-01 ✓
	°F	86.00	85.2	86.8	0.2	85.8 °F	1.2E-01 ✓
	°F	104.00	103.2	104.8	0.3	104.3 °F	1.2E-01 ✓

This instrument has been calibrated in accordance with the JJ Calibrations Quality Assurance Manual and is traceable to either the SI or to National Institute of Standards and Technology (NIST). The quality system and this certificate are in compliance with ANSI/NCSL Z540-1-1994, ISO/IEC 17025-2017, ISO 10012-1, the ISO 9000 family and QS 9000. The expanded uncertainties of measurements for this calibration are based upon 95% (2 sigma) confidence limits. Unless stated in the comments, certificates reflect the "Simple Acceptance Rule" as specified by JCGM 106:2012. Unless otherwise stated, a test accuracy ratio (TAR) of 4:1, if achievable, is maintained. The results reported herein apply only to the calibration of the item described above. This report may not be reproduced, except in full, without written approval of JJ Calibrations.

Reviewer

3 Issued 06/04/2020 Rev # 15

Inspector

Tape Measure Calibration Log

Place the calibrated 12" ruler under the tape measure and verify that each ½" (i.e. 1.5", 2", 2.5") between 0 and 36" is within 1/8".

Calibrated using OMNI-00281

Tape Measure Number	Description	Cal Dates				Technician Initials			
OMNI-00296-T55	Dewalt 16' Tape Measure	12/12/16	12/4/17	1/2/19		BR	BR	BC	
OMNI-00296-T56	Dewalt 25' Tape Measure	12/12/16		1/10/20		BR		TT	
OMNI-00296-T59	Dewalt 25' Tape Measures	12/12/16				BR			
OMNI-00296-T58	Dewalt 25' Tape measure	3/9/17	4/3/18	10/23/19		BR	BR	BR	
OMNI-00296-T40	Stanley FatMax Tape measuret 16'	11/17/17	1/2/19	1/10/20		NTS	BR	TT	
OMNI-00296-T31	Stanley Powerlock Tape Measuret	11/22/17	1/2/19	1/10/20		NTS	BR	TT	
OMNI-00296-T59	DeWalt 25' tape Measure	12/06/17	4/3/19	04/16/20		NTS	BR	TT	
OMNI-00296-T54	DeWalt 25' tape Measure	12/06/17				NTS			
OMNI-00296-T56	DeWalt 25' tape Measure	12/06/17				NTS			
OMNI-00296-T55	DeWalt 25' tape Measure	12/06/17	4/3/18	4/3/19		NTS	BR	BR	
OMNI-00296-T47	Removed From Service. Numbers were wearing off.	1/2/19				BR			
OMNI-00296-T60	CRAFTSMAN 16' Tape measure	11/04/19				TT			
OMNI-00296-T61	CRAFTSMAN 16' tape measure	11/04/19				TT			
OMNI-00296-T62	CRAFTSMAN 16' tape measure	11/04/19				TT			
OMNI-00296-T63	Milwaukee 10' tape measure	11/22/19				TT			
OMNI-00296-T64	Milwaukee 10' tape measure	11/22/19				TT			
OMNI-00296-T51	ACE ~~16'~~ 26' Tape Measure	1/10/20				TT			
OMNI-00296-T65	Milwaukee 16' Tape measure	04/16/20				TT			

VWR Temperature Hygrometer Calibration Procedure and Data Sheet

Frequency: Every Two Years

Step 1: Locate NIST traceable standard.

Step 2: Place unit to be calibrated, tracking No. OMNI-00592, inside OMNI desiccate box on the same shelf with the NIST traceable standard.

Step 3: After a period of not less than four hours record the temperature and humidity of both units in the spaces provide below.

Step 4: If the unit to be calibrated matches the NIST standard within ± 4%, it is acceptable. If not, the unit needs to be sent to a repair company or replaced.

Verification Data:

Date: 1/29/19 ~~1/29/19~~ pa Technician: BDavis

Time in desiccate: 0840 Recording time: 1415

NIST Standard Temperature: 70.2 °F NIST Standard Humidity: 14.6

Test Unit Temperature Reading: 69.9 °F Test Unit Humidity Reading: 12.1

Test unit OMNI- 00592 is X or was not ___ within acceptable limits.

Technician Signature: [signature]

Comments: A difference of 2.5% was found, with a full scale of 90% on the Instrument this gives a 2.77% deviation.

Calibration sheet For MTW-150K S/N MKW04072 (OMNI-00353)

Calibration Interval: 12 months

Parameter	Date	Omni reference weights used	Weight	Scale readout	Compliance	
Mass in Lbs.	12-11-08	00132	10 lb	10.0 lbs	✓	
	12-11-08	00132, 255	20 lb	20.0 lbs	✓	
	12-11-08	00132, 255, 274	30 lb	30.0 lbs	✓	
	3/9/11	00132	10LBS	10LBS	X	SW
	3/9/11	132/255	10LBS×2	20 LB	X	SW
	3/9/11	132/255/274	10 LB X 3	30 LB	X	SW
	8/10/2012	00132	10 lb	10.0 lb	✓	J. Clark
	8/10/2012	132, 255	20 lb	20.0 lb	✓	J. Clark
	8/10/2012	132, 255, 274	30 lb	30.0 lb	✓	J. Clark
	7/19/2013	00132	10 lb	10.0 lb	✓	J. Clark
	7/19/2013	132, 255	20 lb	20.0 lb	✓	J. Clark
	7/19/2013	132, 255, 274	30 lb	30.0 lb	✓	J. Clark
	7/8/9/2014	- 00132	10 lb	10.0 lb	✓	J. Clark
	7/9/2014	- 00132, - 00255	20 lb	20.0 lb	✓	J. Clark
	7/9/2014	-00132, -00255, -00274	30 lb	30.0 lb	✓	J. Clark
	7/13/2015	-00132	10 lb	10.0 lb	✓	J. Clark
	7/13/2015	-00132, -00255	20 lb	20.0 lb	✓	↓
	7/13/2015	-00132, -00255, -00274	30 lb	30.0 lb	✓	
	7/26/2016	Omni - 00283B	1 kg	2.2 lb	✓	B Davis
	7/26/2016	Omni - 00274	10 lb	12.2 lb	✓	B Davis
	7/26/2016	Omni - 00255	10 lb	22.2 lb	✓	B Davis
	8/14/17	Omni - 00283B	1 kg	2.2 lbs	—	BD
	8/14/17	Omni - 00274	+ 10.0	B/L 10.0 12.2	—	BD
	8/14/17	Omni - 00255	+ 10.0	22.2	—	BD
	8/31/18	Omni-00283B	1 kg	2.2	—	BD
	8/31/18	Omni-00274	+ 10.0	12.2	—	BD
	8/31/18	Omni-00255	+ 10.0	22.2	—	BD
	10/24/19	Omni-00283B	1kg	2.2 lbs	—	BD
	10/24/19	Omni-00274	+ 10.0	12.2 lbs	—	BD
	10/24/19	Omni-00255	+ 10.0	22.2 lbs	—	BD
	10/06/20	OMNI-00283B	1kg	2.2 lbs	✓	TT
	10/06/20	OMNI-00255	+ 10 lbs	12.2 lbs	✓	TT
	10/06/20	OMNI-00274	+ 10 lbs	22.2 lbs	✓	TT

Thermal Metering System Calibration
Y Factor

Manufacturer:	Apex Instruments
Model:	DGM-SK25DA-TL
Serial Number:	8004298
OMNI Tracking No.:	OMNI-00413
Calibrated Orifice:	☐ Yes

Average Gas Meter y Factor	Orifice Meter dH@
0.994	N/A

Calibration Date:	10/06/20	
Calibrated by:	Tony Tong	
Calibration Frequency:	Six Month	
Next Calibration Due:	4/6/2021	
Instrument Range:	1.000	cfm
Standard Temp.:	68	oF
Standard Press.:	29.92	"Hg
Barometric Press., Pb:	30.14	"Hg
Signature/Date:		

Previous Calibration Comparision

Date	4/14/2020	Acceptable Deviation (5%)	Deviation
y Factor	1.016	0.0508	0.022
Acceptance	Acceptable		

Current Calibration

Acceptable y Deviation	0.020
Maximum y Deviation	0.005
Acceptable dH@ Deviation	N/A
Maximum dH@ Deviation	N/A
Acceptance	Acceptable

Reference Standard *			
Standard Calibrator	Model	Standard Test Meter	
	S/N	OMNI-00001	
	Calib. Date	25-Nov-19	
	Calib. Value	0.9981	y factor (ref)

Calibration Parameters	Run 1	Run 2	Run 3
Reference Meter Pressure ("H2O), Pr	0.00	0.00	0.00
DGM Pressure ("H2O), Pd	-5.00	-2.50	-0.50
Initial Reference Meter	433.936	441.845	456.15
Final Reference Meter	440.167	454.775	464.153
Initial DGM	0	0	0
Final DGM	6.363	13.005	8.043
Temp. Ref. Meter (°F), Tr	70.0	70.0	70.0
Temperature DGM (°F), Td	70.0	70.0	70.0
Time (min)	4.5	14.0	20.5
Net Volume Ref. Meter, Vr	6.231	12.930	8.003
Net Volume DGM, Vd	6.363	13.005	8.043
Gas Meter y Factor =	**0.990**	**0.998**	**0.994**
Gas Meter y Factor Deviation (from avg.)	0.005	0.004	0.000
Orifice dH@	**N/A**	**N/A**	**N/A**
Orifice dH@ Deviation (from avg.)	N/A	N/A	N/A

where:

1. Deviation = |Average value for all runs - current run value|

** 2. y = [Vr x (y factor (ref)) x (Pb + (Pr/ 13.6)) x (Td + 460)]/ [Vd x (Pb + (Pd / 13.6)) x (Tr + 460)]

** 3. dH@ = 0.0317 x Pd / (Pb (Td + 460)) x [(Tr + 460) x time) / Vr]^2

* Reference calibration is traceable to NIST through NIST Test # 40674, Kimble ASTM E1272, or NIST traceable laboratory

** Equations come from EPA Method 5

The uncertainty of measurement is ±0.14 ft^3/min. This is based on the reference standard having a TAR (Test Accuracy Ratio) of at least 4:1.

ZRE NDIR/O_2

USER'S MANUAL

1312 West Grove Avenue
Orange, CA 92865-4134
Phone: 714-974-5560 Fax: 714-921-2531
www.gasanalyzers.com

Thermal Metering System Calibration
Y Factor

Manufacturer:	APEX
Model:	XC-60-EP
Serial Number:	606001
OMNI Tracking No.:	OMNI-00335
Calibrated Orifice:	☐ Yes

Previous Calibration Comparision

Date	1/22/2020	Acceptable Deviation (5%)	Deviation
y Factor	1.017	0.05085	0.004
Acceptance	Acceptable		

Average Gas Meter y Factor	Orifice Meter dH@
1.013	N/A

Calibration Date:	06/23/20	
Calibrated by:	Tony Tong	
Calibration Frequency:	Six Month	
Next Calibration Due:	12/23/2020	
Instrument Range:	1.000	cfm
Standard Temp.:	68	oF
Standard Press.:	29.92	"Hg
Barometric Press., Pb:	29.96	"Hg
Signature/Date:	Tony Tong	

Current Calibration

Acceptable y Deviation	0.020
Maximum y Deviation	0.006
Acceptable dH@ Deviation	N/A
Maximum dH@ Deviation	N/A
Acceptance	Acceptable

Reference Standard *			
Standard Calibrator	Model	Standard Test Meter	
	S/N	OMNI-00001	
	Calib. Date	25-Nov-20	
	Calib. Value	0.9981	y factor (ref)

Calibration Parameters	Run 1	Run 2	Run 3
Reference Meter Pressure ("H2O), Pr	0.00	0.00	0.00
DGM Pressure ("H2O), Pd	2.00	1.30	1.00
Initial Reference Meter	186.903	192.7	198.545
Final Reference Meter	192.35	198.451	203.72
Initial DGM	0	0	0
Final DGM	5.395	5.739	5.22
Temp. Ref. Meter (°F), Tr	82.0	82.0	82.0
Temperature DGM (°F), Td	88.0	93.0	93.0
Time (min)	27.2	35.4	36.5
Net Volume Ref. Meter, Vr	5.447	5.751	5.175
Net Volume DGM, Vd	5.395	5.739	5.22
Gas Meter y Factor =	**1.014**	**1.017**	**1.007**
Gas Meter y Factor Deviation (from avg.)	0.001	0.004	0.006
Orifice dH@	**N/A**	**N/A**	**N/A**
Orifice dH@ Deviation (from avg.)	N/A	N/A	N/A

where:

1. Deviation = |Average value for all runs - current run value|

** 2. y = [Vr x (y factor (ref)) x (Pb + (Pr/ 13.6)) x (Td + 460)]/ [Vd x (Pb + (Pd / 13.6)) x (Tr + 460)]

** 3. dH@ = 0.0317 x Pd / (Pb (Td + 460)) x [(Tr + 460) x time) / Vr]^2

* Reference calibration is traceable to NIST through NIST Test # 40674, Kimble ASTM E1272, or NIST traceable laboratory

** Equations come from EPA Method 5

The uncertainty of measurement is ±0.14 ft^3/min. This is based on the reference standard having a TAR (Test Accuracy Ratio) of at least 4:1.

DIFFERENTIAL PRESSURE GAUGE CALIBRATION DATA SHEET

Instrument to be calibrated: Pressure Transducer

Maximum Range: 0 – 2" H_2O ID Number: OMNI-00335

Calibration Instrument: Digital Manometer ID Number: OMNI-00395

Date: 06/25/2020 By: Tony Tong

This form is to be used only in conjunction with Standard Procedure C-SPC.

Range of Calibration Point ("WC)	Digital Manometer Input ("WC)	Pressure Gauge Response ("WC)	Difference | Input – Response |	% Error of Full Span*
0-20% Max. Range 0.0 – 0.4	0.33	0.326	0.004	0.2
20-40% Max. Range 0.4 – 0.8	0.54	0.538	0.002	0.1
40-60% Max. Range 0.8 – 1.2	1.04	1.047	0.007	0.35
60-80% Max. Range 1.2 – 1.6	1.33	1.336	0.006	0.3
80-100% Max. Range 1.6 – 2.0	1.86	1.871	0.011	0.55

*Acceptable tolerance is 4%.

The uncertainty of measurement is ±0.4" WC. This is based on the reference standard having a TAR (Test Accuracy Ratio) of at least 4:1.

Technician signature: Tony Tong Date: 01/21/2020

Reviewed by: [signature] Date: 10/22/20

Temperature Calibration
EPA Method 28R, ASTM 2515

BOOTH:	TEMPERATURE MONITOR TYPE:	EQUIPMENT NUMBER:
E1	National Instruments Logger	00335, 00336

REFERENCE METER EQUIPMENT NUMBER: 00373	Calibration Due Date: 12/24/2020

CALIBRATION PERFORMED BY:	DATE:	AMBIENT TEMPERATURE:	BAROMETRIC PRESSURE:
Tony Tong	06/24/2020	78	30.05

Input Temperature (F)	Ambient	Meter A	Meter B	Filter A	Filter B	Tunnel	FB Interior
0	1	1	1	1	1	0	0
100	101	101	101	101	101	100	100
300	301	301	301	301	301	300	300
500	501	501	501	501	501	500	500
700	701	701	701	701	701	700	700
1000	1001	1001	1001	1001	1001	1000	1000
1500	1501	1501	1501	1501	1501	1500	1500
2000	2001	2001	2001	2001	2001	2001	2001

Input (F)	FB Top	FB Bottom	FB Back	FB Left	FB Right	Imp A	Imp B	Cat	Stack
0	0	0	0	0	0	1	1	1	0
100	100	100	100	100	100	101	101	100	100
300	300	300	300	300	300	301	301	301	300
500	500	500	500	500	500	501	501	500	500
700	700	700	700	700	700	701	701	701	700
1000	1000	1000	1000	1000	1000	1001	1001	1001	1000
1500	1500	1500	1500	1500	1500	1501	1501	1501	1500
2000	2001	2001	2001	2001	2001	2001	2001	2001	2001

Technician signature: Tony Tong Date: 06/24/2020

Reviewed By: Date: 10/22/20

Thermal Metering System Calibration
Y Factor

Manufacturer:	APEX
Model:	XC-60-EP
Serial Number:	606002
OMNI Tracking No.:	OMNI-00336
Calibrated Orifice:	☐ Yes

Previous Calibration Comparision

Date	1/22/2020	Acceptable Deviation (5%)	Deviation
y Factor	0.991	0.04955	0.006
Acceptance	Acceptable		

Current Calibration

Acceptable y Deviation	0.020
Maximum y Deviation	0.008
Acceptable dH@ Deviation	N/A
Maximum dH@ Deviation	N/A
Acceptance	Acceptable

Average Gas Meter y Factor	Orifice Meter dH@
0.997	N/A

Calibration Date:	06/24/20	
Calibrated by:	Tony Tong	
Calibration Frequency:	Six Month	
Next Calibration Due:	12/24/2020	
Instrument Range:	1.000	cfm
Standard Temp.:	68	oF
Standard Press.:	29.92	"Hg
Barometric Press., Pb:	30.05	"Hg
Signature/Date:	Tony Tong	

Reference Standard *			
Standard Calibrator	Model	Standard Test Meter	
	S/N	OMNI-00001	
	Calib. Date	25-Nov-19	
	Calib. Value	0.9981	y factor (ref)

Calibration Parameters	Run 1	Run 2	Run 3
Reference Meter Pressure ("H2O), Pr	0.00	0.00	0.00
DGM Pressure ("H2O), Pd	1.90	1.00	0.80
Initial Reference Meter	205.825	213.525	218.946
Final Reference Meter	213.048	218.674	224.485
Initial DGM	0	0	0
Final DGM	7.236	5.247	5.661
Temp. Ref. Meter (°F), Tr	77.0	77.0	77.0
Temperature DGM (°F), Td	84.0	86.0	87.0
Time (min)	34.5	34.5	41.5
Net Volume Ref. Meter, Vr	7.223	5.149	5.539
Net Volume DGM, Vd	7.236	5.247	5.661
Gas Meter y Factor =	**1.005**	**0.993**	**0.993**
Gas Meter y Factor Deviation (from avg.)	0.008	0.004	0.004
Orifice dH@	**N/A**	**N/A**	**N/A**
Orifice dH@ Deviation (from avg.)	N/A	N/A	N/A

where:

1. Deviation = |Average value for all runs - current run value|

** 2. $y = [Vr \times (y \text{ factor (ref)}) \times (Pb + (Pr/ 13.6)) \times (Td + 460)]/ [Vd \times (Pb + (Pd / 13.6)) \times (Tr + 460)]$

** 3. $dH@ = 0.0317 \times Pd / (Pb (Td + 460)) \times [(Tr + 460) \times time) / Vr]^2$

* Reference calibration is traceable to NIST through NIST Test # 40674, Kimble ASTM E1272, or NIST traceable laboratory

** Equations come from EPA Method 5

The uncertainty of measurement is ±0.14 ft^3/min. This is based on the reference standard having a TAR (Test Accuracy Ratio) of at least 4:1.

DIFFERENTIAL PRESSURE GAUGE CALIBRATION DATA SHEET

Instrument to be calibrated: Pressure Transducer

Maximum Range: 0 – 2" H_2O ID Number: OMNI-00336

Calibration Instrument: Digital Manometer ID Number: OMNI-00395

Date: 06/25/2020 By: Tony Tong

This form is to be used only in conjunction with Standard Procedure C-SPC.

Range of Calibration Point ("WC)	Digital Manometer Input ("WC)	Pressure Gauge Response ("WC)	Difference | Input – Response |	% Error of Full Span*
0-20% Max. Range 0.0 – 0.4	0.28	0.260	0.020	1.00
20-40% Max. Range 0.4 – 0.8	0.76	0.749	0.011	0.55
40-60% Max. Range 0.8 – 1.2	1.07	1.058	0.012	0.60
60-80% Max. Range 1.2 – 1.6	1.50	1.494	0.006	0.30
80-100% Max. Range 1.6 – 2.0	1.75	1.741	0.009	0.45

*Acceptable tolerance is 4%.

The uncertainty of measurement is ±0.4" WC. This is based on the reference standard having a TAR (Test Accuracy Ratio) of at least 4:1.

Technician signature: Tony Tong Date: 06/25/2020

Reviewed by: Date: 10/22/20

Temperature Calibration
EPA Method 28R, ASTM 2515

BOOTH:	TEMPERATURE MONITOR TYPE:	EQUIPMENT NUMBER:
E1	National Instruments Logger	00335, 00336

REFERENCE METER EQUIPMENT NUMBER: 00373	Calibration Due Date: 12/24/2020

CALIBRATION PERFORMED BY:	DATE:	AMBIENT TEMPERATURE:	BAROMETRIC PRESSURE:
Tony Tong	06/24/2020	78	30.05

Input Temperature (F)	Ambient	Meter A	Meter B	Filter A	Filter B	Tunnel	FB Interior
0	1	1	1	1	1	0	0
100	101	101	101	101	101	100	100
300	301	301	301	301	301	300	300
500	501	501	501	501	501	500	500
700	701	701	701	701	701	700	700
1000	1001	1001	1001	1001	1001	1000	1000
1500	1501	1501	1501	1501	1501	1500	1500
2000	2001	2001	2001	2001	2001	2001	2001

Input (F)	FB Top	FB Bottom	FB Back	FB Left	FB Right	Imp A	Imp B	Cat	Stack
0	0	0	0	0	0	1	1	1	0
100	100	100	100	100	100	101	101	100	100
300	300	300	300	300	300	301	301	301	300
500	500	500	500	500	500	501	501	500	500
700	700	700	700	700	700	701	701	701	700
1000	1000	1000	1000	1000	1000	1001	1001	1001	1000
1500	1500	1500	1500	1500	1500	1501	1501	1501	1500
2000	2001	2001	2001	2001	2001	2001	2001	2001	2001

Technician signature: Tony Tong Date: 06/24/2020

Reviewed By: Date: 10/22/20

OMNI Environmental, Inc.
OMNI-Test Laboratories, Inc.

WOOD MOISTURE CONTENT CALIBRATION WORKSHEET

Moisture Content Standard OMNI ID #: 00431

Reference Moisture Content Standard: **OMNI # 00430**

Date	Temp.	Barometric Pressure	Fixed Moisture %	Fixed Moisture %	Observed Moisture %		Initials
11/14/16	68° F	30.10 in Hg	22%	12%	22%	12%	AR2
5/10/17	70°F	30.14 in Hg	22%	12%	22%	12%	AR
11/17/17	70°F	30.23 in Hg	22%	12%	22%	12%	MS
5/18/18	71°F	30.12 in Hg	22%	12%	22%	12%	AR2
10/28/19	67°F	30.29 in Hg	22%	12%	22%	12%	AR
06/04/2020	74.5	30.24 in Hg	22%	12%	22%	12%	TT
12/24/2020	71.1	30.25 "Hg	22%	12%	22%	12%	TT
			22%	12%			
			22%	12%			
			22%	12%			
			22%	12%			
			22%	12%			
			22%	12%			
			22%	12%			
			22%	12%			
			22%	12%			
			22%	12%			
			22%	12%			

Notes: _____

Technician signature: _____ Date: 11/15/16

Tektronix®

ACCREDITED

CALIBRATION CERT #2357.22

Certificate of Calibration

15898864

Instrument Identification

Company ID: 74857
OMNI-TEST
MICHAEL CASTILLO
13327 NE AIRPORT WAY
PORTLAND, OR 97230

PO Number: 200307

Instrument ID: **OMNI-00579**
Manufacturer: EXTECH
Description: THERMO - ANEMOMETER

Model Number: 407113
Serial Number: A012691
SW/FW Version: N/A

Accuracy: Air velocity: ±2% of reading ±20 FPM
Temperature: ±.8°C

Certificate Information

Reason For Service: CALIBRATION
Type of Cal: ACCREDITED 17025 WITH UNCERTAINTIES
As Found Condition: IN TOLERANCE
As Left Condition: IN TOLERANCE
Procedure: 33K6-4-1769-1 VELOCITY, TEMP, AND FLOW REV: 9/30/15
Remarks: *See 1 page of attached data*

Technician: RYAN EDWARDS
Cal Date 15Sep2020
Cal Due Date: 15Sep2021
Interval: 12 MONTHS
Temperature: 24.0 C
Humidity: 50.0 %

Tektronix certifies the performance of the above instrument has been verified using test equipment of known accuracy, traceable to a National Metrology Institute such as NIST, NPL or PTB and the International System of Units (SI). The methods and procedures used comply with ISO/IEC 17025. Reported uncertainties represent expanded uncertainties expressed at approximately the 95% confidence level using a coverage of k=2.

This certificate and associated attachments relate only to the items calibrated. No representation is made about the long-term stability of this unit. Any number of factors can influence the calibration that may cause the unit to drift out of specification before the calibration interval has expired. Calibration due dates appearing on the certificate or label are determined by the customer for administrative purposes and do not imply continued conformance to specifications.

This certificate shall not be reproduced, except in full, without the written approval of the issuing calibration laboratory.

Data Report Attached.

Approved By: RYAN EDWARDS
Service Representative

Issue Date: 9/15/2020

Calibration Standards

NIST Traceable#	Inst. ID#	Description	Manufacturer	Model	Cal Date	Date Due
14942663	38-1005980	PITOT TUBE AIRFLOW SYSTEM	SYPRIS	AF12319/PX653	16Aug2019	16Feb2021
15478242REV2	38-1007264	PLATINUM RESISTANCE THERMOMETER	HART SCIENTIFIC	1502A/5612	25Mar2020	25Mar2021
15366235	38-1018828	TEMP/HUMIDITY PROBE	VAISALA	HMP45A	12Feb2020	12Feb2021

9639 Interocean Drive • Cincinnati, OH 45246 • Phone: 513-870-4730 • Fax: 513-874-7752

Tektronix®

ACCREDITED

CALIBRATION CERT #2357.22

Certificate of Calibration

15898864

Calibration Standards

NIST Traceable#	Inst. ID#	Description	Manufacturer	Model	Cal Date	Date Due
15358879	B0023974	DATA ACQUISITION/SWITCH UNIT	AGILENT	34970A	10Feb2020	10Feb2021
15123132	C100008	HIGH ACCURACY PRESSURE TRANSDUCER	MKS INSTRUMENTS	120AD-00001RCU	30Oct2019	30Apr2021
15451954	C100831	PRESSURE TRANSDUCER	OMEGA	PX409-16B5V	16Mar2020	16Apr2021
15818654	H058567	DIGITAL PRESSURE GAGE	MENSOR	2101	06Aug2020	06Oct2021

9639 Interocean Drive • Cincinnati, OH 45246 • Phone: 513-870-4730 • Fax: 513-874-7752

Tektronix®

Certificate Number: 15898864

Manufacturer: EXTECH
ID / Asset Number: OMNI-00579

Model Number: 407113
Calibration Date: 15-Sep-2020

Function / Range	Nominal Value	As Found	Result	As Left	Result	Min	Max	Units	Uncertainty
Velocity									
Velocity	300	332	Pass	Same	Pass	254	346	fpm	6.3 fpm
	1000	1055	Pass	Same	Pass	940	1060	fpm	15 fpm
	3000	3089	Pass	Same	Pass	2900	3100	fpm	63 fpm
	5000	5126	Pass	Same	Pass	4860	5140	fpm	120 fpm
	6500	6640	Pass	Same	Pass	6330	6670	fpm	150 fpm
Temperature									
Temperature	50.0	50.0	Pass	Same	Pass	48.5	51.5	°F	0.13 °F
	75.0	75.3	Pass	Same	Pass	73.5	76.5	°F	0.13 °F
	110.0	111.0	Pass	Same	Pass	108.5	111.5	°F	0.13 °F
	160.0	161.3	Pass	Same	Pass	158.5	161.5	°F	0.13 °F

Decision Rule 1 - Accredited Calibration Datasheets may contain measurements that are not covered by the Scope of Accreditation. These measurements are indicated by a pound sign(#). Measurement Uncertainty IS NOT taken into account for determining PASS or FAIL.

********END OF MEASUREMENT REPORT********

Section 3

Owner's Manual
Label

Tested & Listed By OMNI-Test Laboratories, Inc. Portland Oregon USA

Central Boiler
20502 160th Street
Greenbush, MN 56726

Report (rapport) # 0117WB036S, 0117WB041E

Serial No. (Numéro de série)	Model (Modèle)	Month/Year Manufactured (Date de fabrication)

Solid Fuel Only Models: Classic Edge 960 Outdoor Wood Furnace

Listed by OMNI-Test Laboratories to the applicable portions of the following standards: UL 2523-2018 Solid Fuel-Fired Hydronic Heating Appliances, Water Heaters and Boilers, CAN/CSA B415.1-10 (R2015) Performance Testing of Solid-Fuel-Burning Heating Appliances, CSA-B366.1-11 (R2015) Solid-Fuel-Fired Central Heating Appliance, ASTM E2618-13 Standard Test Method for Measurement of Particulate Emissions and Heating Efficiency of Solid Fuel-Fired Hydronic Heating Appliances, ASTM E2515-11 Standard Test Method for Determination of Particulate Matter Emissions Collected by a Dilution Tunnel.

For outdoor installations only; Category I Boiler.

May be connected to existing boiler system by qualified installer only.

Never fire appliance with water level below the FULL mark.

DO NOT ATTEMPT TO LIGHT A FIRE WHEN THERE IS GAS VAPOR PRESENT.

FOR SAFETY, KEEP FIREBOX DOOR LATCHED. Leaving the firebox door open may lead to a runaway fire.

THE APPLIANCE AND CHIMNEY MUST BE KEPT IN GOOD CONDITION AND CLEANED WHEN NECESSARY.

THE HEAT EXCHANGER, FLUE PIPE, AND CHIMNEY MUST BE CLEANED REGULARLY TO REMOVE ACCUMULATED CREOSOTE AND ASH. ENSURE THAT THE HEAT EXCHANGER, FLUE PIPE, AND CHIMNEY ARE CLEANED AT THE END OF EACH HEATING SEASON TO MINIMIZE CORROSION DURING THE SUMMER MONTHS. THE APPLIANCE, FLUE PIPE, AND CHIMNEY MUST BE IN GOOD CONDITION. THESE INSTRUCTIONS ALSO APPLY IF A DRAFT INDUCER IS USED.

A POWER GENERATOR MAY BE USED IN EVENT OF POWER FAILURE TO PREVENT LINES FROM FREEZING.

DO NOT CONNECT THIS APPLIANCE TO CHIMNEY FLUE SERVING ANOTHER APPLIANCE.

Installation Clearances to Combustibles

44 in. (1.12 m) from the back, 48 in. (1.22 m) from the front, 12 in. (0.3 m) from the sides, 18 in. (0.46 m) from the chimney inspection cover

Do not store wood or other combustible material within installation clearances. Base - Noncombustible; concrete preferred for all models. Minimum recommended chimney length is 8 ft (two 4-ft sections supplied). Adjust flue draft between -0.010 and -0.030 in. WC (-2.490 and -7.470 Pa). Unsafe to adjust flue draft higher than -0.050 in. WC (-12.450 Pa). Maximum Circuit Breaker: 120 Volts, 50/60 Hz, 15 Amps. Maximum Auxiliary Outlet Load: 120 Volts, 50/60 Hz, 7 Amps.

Firebox Fuel

BURN WOOD ONLY; LOAD WITH CAUTION TO PREVENT DAMAGE TO APPLIANCE. DO NOT BURN GARBAGE, GASOLINE, NAPHTHA, ENGINE OIL, OR OTHER INAPPROPRIATE MATERIALS. DO NOT USE CHEMICALS OR FLUIDS TO START FIRE.

Refer to Owner's Manual for further instructions.

Modèles à combustible solide seulement : Chaudière Extérieure à Bois Classic Edge 960

La chaudière hydronique extérieure Classic Edge fabriquée par Central Boiler a été certifiée par les laboratoires OMNI-Test conforme aux sections applicables des normes suivantes : UL 2523-2018 Appareils de chauffage hydroniques, chauffe-eaux et chaudières à eau à combustibles solides, CAN/CSA B415.1-10 (R2015) Essais et rendement des appareils de chauffage à combustibles solides, CSA-B366.1-11 (R2015) Appareil de chauffage central à combustibles solides, ASTM E2618-13 Protocole d'essais standard destiné à mesurer les émissions de particules et le rendement thermique des appareils de chauffage hydroniques à combustibles solides, ASTM E2515-11 Protocole d'essais standard destiné à déterminer les émissions de particules recueillies par un tunnel de dilution.

Ne convient qu'à des installations extérieures; chaudières de catégorie I.

Peut être connecté à une chaudière existante uniquement par un installateur qualifié.

Ne démarrez jamais l'appareil si le niveau d'eau se situe en deçà du repère FULL (PLEIN).

N'ESSAYEZ PAS D'ALLUMER UN FEU EN PRÉSENCE DE VAPEURS DE GAZ.

À DES FINS DE SÉCURITÉ, GARDEZ FERMÉE LA PORTE DE LA CHAMBRE DE COMBUSTION. Si vous la laissez ouverte, cela peut provoquer un incendie incontrôlé.

L'APPAREIL ET LA CHEMINÉE DOIVENT ÊTRE, AU BESOIN, NETTOYÉS ET MAINTENUS EN BON ÉTAT.

L'ÉCHANGEUR THERMIQUE, LE CARNEAU DE FUMÉES ET LA CHEMINÉE DOIVENT ÊTRE NETTOYÉS RÉGULIÈREMENT AFIN D'ÉLIMINER LES ACCUMULATIONS DE CRÉOSOTE ET DE CENDRES. ASSUREZ-VOUS DE NETTOYER L'ÉCHANGEUR THERMIQUE, LE CARNEAU DE FUMÉES ET LA CHEMINÉE À LA FIN DE CHAQUE SAISON DE CHAUFFE AFIN DE MINIMISER LES RISQUES DE CORROSION DURANT LES MOIS CHAUDS. L'APPAREIL, LE CARNEAU DE FUMÉES ET LA CHEMINÉE DOIVENT ÊTRE EN BON ÉTAT. CES INSTRUCTIONS SONT ÉGALEMENT VALABLES SI LE SYSTÈME EST DOTÉ D'UN DISPOSITIF D'ASPIRATION.

EN CAS DE PANNE D'ÉLECTRICITÉ, POUR ÉVITER QUE LES CANALISATIONS NE GÈLENT, UNE GÉNÉRATRICE ÉLECTRIQUE PEUT ÊTRE UTILISÉE.

NE CONNECTEZ PAS CET APPAREIL À UNE CONDUITE DE CHEMINÉE DE CHEMINÉE SERVANT UN AUTRE.

Installation et Espace Libre jusqu'à des Matériaux Combustibles

112 cm (44 pouces) à partir de l'arrière / 122 cm (48 pouces) à partir du devant / 30 cm (12 pouces) à partir des côtés / à 46 cm (18 pouces) du raccord de cheminée

N'entreposez ni bois ni autre forme de combustible à l'intérieur de la zone de dégagement de l'installation. Base – non combustible; le béton est préféré pour tous les modèles. La longueur de cheminée recommandée s'élève à huit pieds (deux sections de quatre pieds). Réglez le tirage du carneau entre -0,01 et -0,03 pouce de colonne d'eau (-2,490 et -7,470 Pa). Il est dangereux de régler le tirage sur une valeur supérieure à -0,05 pouce de colonne d'eau. Disjoncteur maximale : 120 V, 50/60 Hz, circuit 15 A. Charge maximale prise de courant auxiliaire : 120 V, 50/60 Hz, circuit 7 A.

Combustible pour chambre de combustion

NE BRÛLEZ QUE DU BOIS; CHARGEZ-LE AVEC PRÉCAUTION POUR ÉVITER D'ENDOMMAGER L'APPAREIL. NE PAS BRÛLER DE DÉCHETS, D'ESSENCE, DE NAPHTE, D'HUILE MOTEUR OU TOUT AUTRE PRODUIT INAPPROPRIÉ. NE PAS UTILISER DE PRODUITS CHIMIQUES OU DE LIQUIDES INFLAMMABLES POUR L'ALLUMAGE.

Pour des directives additionnelles, reportez-vous au manuel d'utilisation.

p/n 7000965 Rev. A

Central Boiler, Inc.
20502 160th Street
Greenbush, MN 56726

Serial No: Date Manufactured:

Model: Classic Edge 960

U.S. ENVIRONMENTAL PROTECTION AGENCY Certified to comply with the 2020 particulate emission standards using cord wood.

Tested to: ASTM E2618-13, ASTM E2515-11, CAN/CSA-B415.1-10 (R2015)
Meets: EPA Step 2 Emission Level

Total Particulate Matter: 3.3 g/hr annual weighted average
0.06 lbs/Million Btu heat output

Thermal Output Rating: 0 - 378,339 Btu/hr

Firebox Volume: 32 cubic ft.

Appliance needs periodic inspection and repair for proper operation. Consult owner's manual for further information. It is against federal regulations to operate this appliance in a manner inconsistent with operating instructions in the owner's manual.

p/n: 7000963

Tested & Listed By Portland Oregon USA

OMNI-Test Laboratories, Inc.

WoodMaster, Inc.
20502 160th Street
Greenbush, MN 56726

Report (rapport) # 0117WB036S, 0117WB041E

Serial No. (Numéro de série)	Model (Modèle)	Month/Year Manufactured (Date de fabrication)

Solid Fuel Only Models: CleanFire 900 Outdoor Wood Furnace

Listed by OMNI-Test Laboratories to the applicable portions of the following standards: UL 2523-2018 Solid Fuel-Fired Hydronic Heating Appliances, Water Heaters and Boilers, CAN/CSA B415.1-10 (R2015) Performance Testing of Solid-Fuel-Burning Heating Appliances, CSA-B366.1-11 (R2015) Solid-Fuel-Fired Central Heating Appliance, ASTM E2618-13 Standard Test Method for Measurement of Particulate Emissions and Heating Efficiency of Solid Fuel-Fired Hydronic Heating Appliances, ASTM E2515-11 Standard Test Method for Determination of Particulate Matter Emissions Collected by a Dilution Tunnel.

For outdoor installations only; Category I Boiler.

May be connected to existing boiler system by qualified installer only.

Never fire appliance with water level below the FULL mark.

DO NOT ATTEMPT TO LIGHT A FIRE WHEN THERE IS GAS VAPOR PRESENT.

FOR SAFETY, KEEP FIREBOX DOOR LATCHED. Leaving the firebox door open may lead to a runaway fire.

THE APPLIANCE AND CHIMNEY MUST BE KEPT IN GOOD CONDITION AND CLEANED WHEN NECESSARY.

THE HEAT EXCHANGER, FLUE PIPE, AND CHIMNEY MUST BE CLEANED REGULARLY TO REMOVE ACCUMULATED CREOSOTE AND ASH. ENSURE THAT THE HEAT EXCHANGER, FLUE PIPE, AND CHIMNEY ARE CLEANED AT THE END OF EACH HEATING SEASON TO MINIMIZE CORROSION DURING THE SUMMER MONTHS. THE APPLIANCE, FLUE PIPE, AND CHIMNEY MUST BE IN GOOD CONDITION. THESE INSTRUCTIONS ALSO APPLY IF A DRAFT INDUCER IS USED.

A POWER GENERATOR MAY BE USED IN EVENT OF POWER FAILURE TO PREVENT LINES FROM FREEZING.

DO NOT CONNECT THIS APPLIANCE TO CHIMNEY FLUE SERVING ANOTHER APPLIANCE.

Installation Clearances to Combustibles

44 in. (1.12 m) from the back, 48 in. (1.22 m) from the front, 12 in. (0.3 m) from the sides, 18 in. (0.46 m) from the chimney inspection cover

Do not store wood or other combustible material within installation clearances. Base - Noncombustible; concrete preferred for all models. Minimum recommended chimney length is 8 ft (two 4-ft sections supplied). Adjust flue draft between -0.010 and -0.030 in. WC (-2.490 and -7.470 Pa). Unsafe to adjust flue draft higher than -0.050 in. WC (-12.450 Pa). Maximum Circuit Breaker: 120 Volts, 50/60 Hz, 15 Amps. Maximum Auxiliary Outlet Load: 120 Volts, 50/60 Hz, 7 Amps.

Firebox Fuel

BURN WOOD ONLY; LOAD WITH CAUTION TO PREVENT DAMAGE TO APPLIANCE. DO NOT BURN GARBAGE, GASOLINE, NAPHTHA, ENGINE OIL, OR OTHER INAPPROPRIATE MATERIALS. DO NOT USE CHEMICALS OR FLUIDS TO START FIRE.

Refer to Owner's Manual for further instructions.

Modèles à combustible solide seulement : Chaudière Extérieure à Bois CleanFire 900

La chaudière hydronique extérieure CleanFire fabriquée par WoodMaster a été certifiée par les laboratoires OMNI-Test conforme aux sections applicables des normes suivantes : UL 2523-2018 Appareils de chauffage hydroniques, chauffe-eaux et chaudières à eau à combustibles solides, CAN/CSA B415.1-10 (R2015) Essais et rendement des appareils de chauffage à combustibles solides, CSA-B366.1-11 (R2015) Appareil de chauffage central à combustibles solides, ASTM E2618-13 Protocole d'essais standard destiné à mesurer les émissions de particules et le rendement thermique des appareils de chauffage hydroniques à combustibles solides, ASTM E2515-11 Protocole d'essais standard destiné à déterminer les émissions de particules recueillies par un tunnel de dilution.

Ne convient qu'à des installations extérieures; chaudières de catégorie I.

Peut être connecté à une chaudière existante uniquement par un installateur qualifié.

Ne démarrez jamais l'appareil si le niveau d'eau se situe en deçà du repère FULL (PLEIN).

N'ESSAYEZ PAS D'ALLUMER UN FEU EN PRÉSENCE DE VAPEURS DE GAZ.

À DES FINS DE SÉCURITÉ, GARDEZ FERMÉE LA PORTE DE LA CHAMBRE DE COMBUSTION. Si vous la laissez ouverte, cela peut provoquer un incendie incontrôlé.

L'APPAREIL ET LA CHEMINÉE DOIVENT ÊTRE, AU BESOIN, NETTOYÉS ET MAINTENUS EN BON ÉTAT.

L'ÉCHANGEUR THERMIQUE, LE CARNEAU DE FUMÉES ET LA CHEMINÉE DOIVENT ÊTRE NETTOYÉS RÉGULIÈREMENT AFIN D'ÉLIMINER LES ACCUMULATIONS DE CRÉOSOTE ET DE CENDRES. ASSUREZ-VOUS DE NETTOYER L'ÉCHANGEUR THERMIQUE, LE CARNEAU DE FUMÉES ET LA CHEMINÉE À LA FIN DE CHAQUE SAISON DE CHAUFFE AFIN DE MINIMISER LES RISQUES DE CORROSION DURANT LES MOIS CHAUDS. L'APPAREIL, LE CARNEAU DE FUMÉES ET LA CHEMINÉE DOIVENT ÊTRE EN BON ÉTAT. CES INSTRUCTIONS SONT ÉGALEMENT VALABLES SI LE SYSTÈME EST DOTÉ D'UN DISPOSITIF D'ASPIRATION.

EN CAS DE PANNE D'ÉLECTRICITÉ, POUR ÉVITER QUE LES CANALISATIONS NE GÈLENT, UNE GÉNÉRATRICE ÉLECTRIQUE PEUT ÊTRE UTILISÉE.

NE CONNECTEZ PAS CET APPAREIL À UNE CONDUITE DE CHEMINÉE DE CHEMINÉE SERVANT UN AUTRE.

Installation et Espace Libre jusqu'à des Matériaux Combustibles

112 cm (44 pouces) à partir de l'arrière / 122 cm (48 pouces) à partir du devant / 30 cm (12 pouces) à partir des côtés / à 46 cm (18 pouces) du raccord de cheminée

N'entreposez ni bois ni autre forme de combustible à l'intérieur de la zone de dégagement de l'installation. Base – non combustible; le béton est préféré pour tous les modèles. La longueur de cheminée recommandée s'élève à huit pieds (deux sections de quatre pieds). Réglez le tirage du carneau entre -0,01 et -0,03 pouce de colonne d'eau (-2,490 et -7,470 Pa). Il est dangereux de régler le tirage sur une valeur supérieure à -0,05 pouce de colonne d'eau. Disjoncteur maximale : 120 V, 50/60 Hz, circuit 15 A. Charge maximale prise de courant auxiliaire : 120 V, 50/60 Hz, circuit 7 A.

Combustible pour chambre de combustion

NE BRÛLEZ QUE DU BOIS; CHARGEZ-LE AVEC PRÉCAUTION POUR ÉVITER D'ENDOMMAGER L'APPAREIL. NE PAS BRÛLER DE DÉCHETS, D'ESSENCE, DE NAPHTE, D'HUILE MOTEUR OU TOUT AUTRE PRODUIT INAPPROPRIÉ. NE PAS UTILISER DE PRODUITS CHIMIQUES OU DE LIQUIDES INFLAMMABLES POUR L'ALLUMAGE.

Pour des directives additionnelles, reportez-vous au manuel d'utilisation.

p/n 7000966 Rev. A

WoodMaster, Inc.
20502 160th Street
Greenbush, MN 56726

Serial No: Date Manufactured:

Model: CleanFire 900

U.S. ENVIRONMENTAL PROTECTION AGENCY Certified to comply with the 2020 particulate emission standards using cord wood.

Tested to: ASTM E2618-13, ASTM E2515-11, CAN/CSA-B415.1-10 (R2015)
Meets: EPA Step 2 Emission Level

Total Particulate Matter: 3.3 g/hr annual weighted average
0.06 lbs/Million Btu heat output

Thermal Output Rating: 0 - 378,339 Btu/hr

Firebox Volume: 32 cubic ft.

Appliance needs periodic inspection and repair for proper operation. Consult owner's manual for further information. It is against federal regulations to operate this appliance in a manner inconsistent with operating instructions in the owner's manual.

Central Boiler, Inc. • 20502 160th Street • Greenbush, MN 56726
CentralBoiler.com

The Classic Edge outdoor hydronic heater by Central Boiler is listed by OMNI-Test Laboratories to the applicable portions of the following standards: UL 2523-2018 Solid Fuel-Fired Hydronic Heating Appliances, Water Heaters and Boilers, CAN/CSA B415.1-10 (R2015) Performance Testing of Solid-Fuel-Burning Heating Appliances, CSA-B366.1-11 (R2015) Solid-Fuel-Fired Central Heating Appliance, ASTM E2618-13 Standard Test Method for Measurement of Particulate Emissions and Heating Efficiency of Solid Fuel-Fired Hydronic Heating Appliances, ASTM E2515-11 Standard Test Method for Determination of Particulate Matter Emissions Collected by a Dilution Tunnel.

The Classic Edge includes two 4-foot stainless steel insulated chimney sections (8" in diameter, p/n 10508 - Classic Edge 960). Use only stainless steel solid fuel chimneys specified by Central Boiler. Maximum draft is marked on nameplate.

French Owner's Manual is available at CentralBoiler.com/support or upon request from your dealer
(Manuel d'installation en français disponible sur demande auprès de votre revendeur)

CLASSIC EDGE 960 — Annual Efficiency Rating*: 92.1% (lower heating value), 85.6% (higher heating value)
Manufacturer's Rated Heat Output Capacity: 400,000 Btu/hr | Range**: 0 to 378,339 Btu/hr.
Water Capacity: 420 gal. | Weight: 2,714 lbs

*Performance is a product of the combustion rate, combustion efficiency and heat exchange efficiency with a single fuel load without refueling. Results vary based on wood species, wood quality, wood quantity and moisture content. Efficiencies are determined under the same test conditions using higher heating value, lower heating value and annual fuel utilization efficiency (AFUE).

- This heater meets the 2020 U.S. Environmental Protection Agency's cord wood emission limits for wood heaters sold after May 15, 2020. Under specific test conditions this heater has been shown to deliver heat at rates shown for the respective model above**.
- This wood heater has a manufacturer-set minimum low burn rate that must not be altered. This wood heater needs periodic inspection and repair for proper operation. It is against federal regulations to operate this wood heater in a manner inconsistent with operating instructions in this manual.
- DO NOT OVERFIRE THIS HEATER. Attempts to achieve heat output rates that exceed heater design specifications can result in permanent damage to the heater.
- Any person(s) operating a hydronic heater must comply with all applicable laws, including but not limited to local ordinances.
- Improper use or failure to maintain the hydronic heater may cause nuisance conditions. The person(s) operating a hydronic heater is/are responsible for operation in a manner that does not create a nuisance condition. Meeting the setback distance and stack height recommendations from the manufacturer and requirements in applicable State and local regulations may not always be adequate to prevent nuisance conditions in some areas due to terrain or other factors.
- Operating an outdoor furnace may not be suitable to some individuals' abilities or lifestyles. Be sure to review the Owner's Manual for the appliance with your dealer.

- Register at time of purchase for FREE 25 Year Limited Warranty -

Verify your warranty and check status of water samples at: CentralBoiler.com/w25

For parts and accessories, service or repairs, call your authorized Central Boiler dealer or heating contractor. Record the information below for future reference.

Model	Serial Number	Installation Date
Dealership Name		Phone Number
Owner Name		

CENTRAL BOILER

CLASSIC EDGE™ TITANIUM HDX

OUTDOOR WOOD FURNACE

OWNER'S MANUAL

CLASSIC EDGE 960

TITANIUM HDX

WARNING: If the information in this manual is not followed exactly, a fire or explosion may result causing property damage, personal injury or loss of life.

- **Do not store or use gasoline or other flammable vapors and liquids in the vicinity of this or any other appliance.**
- **WHAT TO DO IF YOU SMELL GAS**
  - **Do not try to light any appliance.**
  - **Do not touch any electrical switch.**
  - **Immediately call your gas supplier. Follow the supplier's instructions.**
  - **If you cannot reach your gas supplier, call the fire department.**
- **Installation and service must be performed by a qualified installer, service agency or the gas supplier.**

EM
C O-TL US
0117WB036S
0117WB041E

MADE IN USA

SAVE THESE INSTRUCTIONS

(p/n 9000828 - REV. A) - JAN 2021

Central Boiler, Inc. • 20502 160th Street • Greenbush, MN 56726
CentralBoiler.com

The Classic Edge outdoor hydronic heater by Central Boiler is listed by OMNI-Test Laboratories to the applicable portions of the following standards: UL 2523-2018 Solid Fuel-Fired Hydronic Heating Appliances, Water Heaters and Boilers, CAN/CSA B415.1-10 (R2015) Performance Testing of Solid-Fuel-Burning Heating Appliances, CSA-B366.1-11 (R2015) Solid-Fuel-Fired Central Heating Appliance, ASTM E2618-13 Standard Test Method for Measurement of Particulate Emissions and Heating Efficiency of Solid Fuel-Fired Hydronic Heating Appliances, ASTM E2515-11 Standard Test Method for Determination of Particulate Matter Emissions Collected by a Dilution Tunnel.

The Classic Edge includes two 4-foot stainless steel insulated chimney sections (8" in diameter, p/n 10508 - Classic Edge 960). Use only stainless steel solid fuel chimneys specified by Central Boiler. Maximum draft is marked on nameplate.

French Owner's Manual is available at CentralBoiler.com/support or upon request from your dealer
(Manuel d'installation en français disponible sur demande auprès de votre revendeur)

CLASSIC EDGE 960 — Annual Efficiency Rating*: 92.1% (lower heating value), 85.6% (higher heating value)
Manufacturer's Rated Heat Output Capacity: 400,000 Btu/hr | Range**: 0 to 378,339 Btu/hr.
Water Capacity: 420 gal. | Weight: 2,714 lbs

*Performance is a product of the combustion rate, combustion efficiency and heat exchange efficiency with a single fuel load without refueling. Results vary based on wood species, wood quality, wood quantity and moisture content. Efficiencies are determined under the same test conditions using higher heating value, lower heating value and annual fuel utilization efficiency (AFUE).

- This heater meets the 2020 U.S. Environmental Protection Agency's cord wood emission limits for wood heaters sold after May 15, 2020. Under specific test conditions this heater has been shown to deliver heat at rates shown for the respective model above**.
- This wood heater has a manufacturer-set minimum low burn rate that must not be altered. This wood heater needs periodic inspection and repair for proper operation. It is against federal regulations to operate this wood heater in a manner inconsistent with operating instructions in this manual.
- DO NOT OVERFIRE THIS HEATER. Attempts to achieve heat output rates that exceed heater design specifications can result in permanent damage to the heater.
- Any person(s) operating a hydronic heater must comply with all applicable laws, including but not limited to local ordinances.
- Improper use or failure to maintain the hydronic heater may cause nuisance conditions. The person(s) operating a hydronic heater is/are responsible for operation in a manner that does not create a nuisance condition. Meeting the setback distance and stack height recommendations from the manufacturer and requirements in applicable State and local regulations may not always be adequate to prevent nuisance conditions in some areas due to terrain or other factors.
- Operating an outdoor furnace may not be suitable to some individuals' abilities or lifestyles. Be sure to review the Owner's Manual for the appliance with your dealer.

- Register at time of purchase for FREE 25 Year Limited Warranty -

Verify your warranty and check status of water samples at: CentralBoiler.com/w25

For parts and accessories, service or repairs, call your authorized Central Boiler dealer or heating contractor. Record the information below for future reference.

Model	Serial Number	Installation Date
Dealership Name		Phone Number
Owner Name		

Contents

How to Use This Guide

The guide is divided into sections to help with the operation and maintenance of the outdoor furnace. If questions arise that are not answered with this manual, consult with your authorized Central Boiler dealer.

Central Boiler Online Resources Iv
EPA Resources Iv
Labeling and Terminology 1

Important Precautionary Information 2
Foundation 4
Access to Ports on Outdoor Furnace 5
Ground Rod Kit 6
Furnace Installation - Connecting to Your Existing System 6
Outdoor Wood Furnace Best Burn Practices 8
Chimney Recommendations 8
Chimney Installation 8

Water Quality And Maintenance 11
Test Supply Water 11
Adding Initial Water Treatment 11
Immediately Heat the System Water 12
Test the Treated System Water 12
Send in Initial Water Sample 13
Annual Water Sample 13
Water Samples 14
System Maintenance 14
Water Test Kits and Test Results 14
Flushing the System 15
Adding Antifreeze to Outdoor Furnace System 17

Wood Selection and Preparation 18

Operating Instructions 19
FireStar Combustion Controller 19
How the Classic Edge Works 19
Cold Start Initial Fire Up 21
Adding Heat Load 24
Ash Removal Frequency 24
Adding Wood 24

Maintenance Schedule 29
Control Locations 30
Routine Maintenance 30
Maintenance Sections 31

Serviceable Items 43
Firebox Door Hinge / Latch Bearing Adjustment 43
Firebox Door Seal 43
Reaction Chamber Door Seal 45
Heat Exchanger Door Seal 46
Circuit Breaker 47
Airbox Seal 48
Air Charge Tube and Refractory Modules 49
Thermocouple 50
Heat Exchanger Door Insulation 51
Heat Exchanger Access Cover Insulation 52
Combustion Air Tube / Front Air Channel 53

Troubleshooting 55

General Information 64

Wiring Diagram 65

Water Sample Information - Titanium Series Models 66

CENTRAL BOILER ONLINE RESOURCES

Enter **CentralBoiler.com** in your browser or scan the code using any QR code reader app on your smartphone to access Central Boiler's library of information to help with installation, operation and maintenance of your Central Boiler outdoor furnace.

Detailed Furnace Installation Variations - https://www.CentralBoiler.com/explore/furnace-installation/

View and/or download PDFs to assist in installation of your outdoor furnace. Information and examples regarding pumps, foundations, chimneys and support structures, ThermoPEX piping, and example configurations for a variety of heating configurations.

Online Support Center

https://www.CentralBoiler.com/Support/

Enter your furnace serial number and find articles, answers, parts and more information.

Online Support Center

CentralBoiler.com/Support

Enter your serial number for information specific to your furnace.

Write your ***serial number*** here for future reference.

Videos to supplement the Owner's Manual are available at
www.youtube.com/centralboilerinc
Watch tips on initial startup, testing system water and more.

INSTALLATIONS IN MASSACHUSETTS:

1. All installation components must be products approved in the Commonwealth of Massachusetts by the Gas and Plumbing Board.
2. The maximum run of tubing from the water heater to a fan coil is 50 linear feet.
3. Persons operating this hydronic heater are responsible for operation of the hydronic heater so as not to cause a condition of air pollution as defined in 310 CMR 7.01(1).

Labeling and Terminology

The outdoor furnace and this guide use the following terms and symbols to bring attention to the presence of hazards of various risk levels and important information concerning the use and maintenance of the outdoor furnace.

⚠ DANGER

This symbol and text indicate an imminently hazardous situation which, if ignored, will result in death or serious injury.

⚠ WARNING

This symbol and text indicate the presence of a hazard which can cause severe personal injury or death to an operator or bystander, or substantial property damage if ignored.

⚠ CAUTION

This symbol and text indicate the presence of a hazard which can cause minor personal injury or property damage if ignored.

NOTE: Indicates supplementary information worthy of particular attention relating to installation, operation, or maintenance of the outdoor furnace but is not related to a hazardous condition.

Be sure to follow all instructions and related precautions as they are meant for your safety and protection. Store this manual in a readily accessible location for future reference.

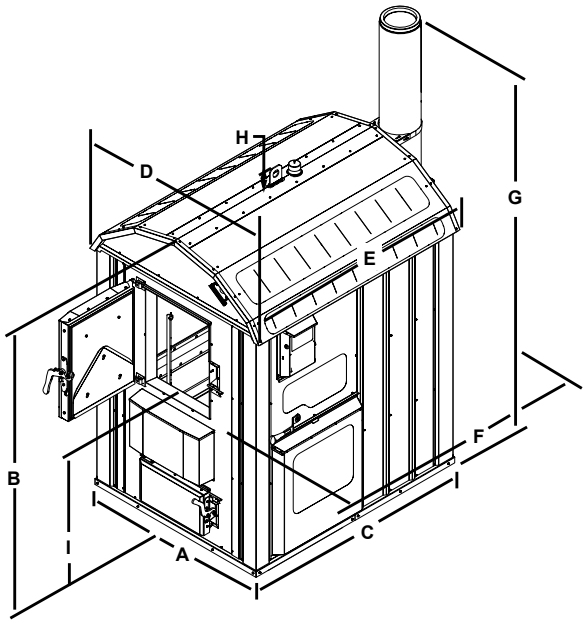

Classic Edge 960 Measurements									
	A	B	C	D	E	F	G	H	I
in.	56	87.5	69	58.5	70	89.5	163	5	39
cm	142	222	175	148.5	178	227	414	13	99

- Measurement (F) is from firebox door to chimney inspection cover.
- Measurement (G) includes two 4 ft (1.2 m) chimney sections.
- All measurements are approximate

Important Precautionary Information

Be sure to read carefully and understand these precautions before, during and after the installation, operation and maintenance of the furnace.

NOTE: All operations must be in accordance with local and state codes which may differ from the information in this manual.

⚠ CAUTION

This outdoor furnace is not intended to be the only source of heat. In the event of a prolonged power failure, a generator may be used to prevent lines from freezing. Should the outdoor furnace be left unattended, run out of fuel or require service, an alternate heating source in the building being heated should be in place to prevent damage caused by freezing.

⚠ WARNING

This outdoor furnace and/or chimney is not intended or safety tested to be used or installed in a building where contents of that building could be damaged or where a financial loss could occur from smoke, soot, fire or water.

⚠ WARNING

The outdoor furnace vent cap must fit loosely on the vent opening. Do not force the cap down or try to seal it tightly onto the vent pipe. Do not extend or restrict the vent pipe or opening. DO NOT ALLOW THE OUTDOOR FURNACE TO BE PRESSURIZED.

⚠ WARNING

Be sure the outdoor furnace is filled with water before firing. Never fire the outdoor furnace when the water level is more than 1" (2.5 cm) below the FULL mark on the sight gauge. MolyArmor 350 must be added before the initial fill (see Water Quality and Maintenance).

⚠ WARNING

Disconnect the electrical power to the outdoor furnace before replacing an electrical component.

⚠ WARNING

Do not attempt service inside the electrical control panel without first disconnecting the electrical power at the main power source.

NOTE: Any electrical installation should be done by a qualified installer in accordance with applicable codes.

⚠ WARNING

Allow the outdoor furnace to thoroughly cool and completely clean out the firebox before draining water from the outdoor furnace. If the water in the outdoor furnace ever boils, be sure to check the water level and restore to full. If water is added, the proper level of MolyArmor 350 Corrosion Inhibitor (p/n 2900630) must be maintained.

⚠ WARNING

When cleaning the outdoor furnace, be careful not to spill any coals.

⚠ WARNING

ALWAYS store ash in a covered non-combustible container.

⚠ WARNING

Do not allow combustible materials (straw, hay or wood) near the outdoor furnace. Keep the perimeter of the outdoor furnace clear and clean.

⚠ WARNING

For fire safety, keep all combustible materials at least six feet (two meters) away from the outdoor furnace, especially around the door area. Debris of wood chips and other combustibles in the area may be easily ignited if a hot coal is spilled out of the firebox and left unnoticed.

⚠ WARNING

The firebox door must be closed and latched at all times except when filling the firebox with wood. Leaving the firebox door open may lead to a runaway fire. In the event of a runaway fire, close the firebox door. In the event of a chimney or soot fire, close the firebox door and make sure power is off to the outdoor furnace.

⚠ WARNING

All covers must be maintained at all times except during maintenance, inspection and service.

⚠ WARNING

When opening the firebox door, the door switch will shut off the primary air actuator motor while the firebox door is open. Do NOT disable the door switch.

NOTE: The prohibition against burning these materials does not prohibit the use of fire starters made from paper, cardboard, saw dust, wax and similar substances for the purpose of starting a fire in an affected wood heater.

NOTE: Do not use chemicals or fluids to start the fire. Use kindling or gas-fired wood ignition option to start an initial fire.

NOTE: The sight gauge valve should always be closed, except when checking water level. Water will automatically drain from the sight gauge tube when the valve is closed. Remember that this type of valve requires only 1/4 turn to open or close.

⚠ WARNING

This heater is designed to burn natural wood only. DO NOT BURN: unseasoned wood, treated wood, colored paper, cardboard, trash or garbage.

NOTE: Chloride or sulfurous gases can be generated if plastic or rubber is burned and will mix with the moisture from the wood and form hydrochloric or sulfuric acids in the firebox, creating corrosion.

NOTE: This outdoor furnace is not to be used with an automatic stoker.

⚠ CAUTION

This outdoor furnace is not to be connected to a chimney flue serving another appliance.

⚠ WARNING

When adding wood to the firebox, be careful not to get pinched between the wood and the door frame, or any part of the outdoor furnace. Use extreme care with large pieces of wood that may be difficult to handle.

Tools

Included with each new furnace are tools that are invaluable for maintenance and cleaning. Use the **maintenance tool** to clean the firebox and to remove ash from the Reaction Chamber. The maintenance tool is also used for cleaning the firebox and door frame. The **cleaning rod** can be used to break up heavy or solidified ash in the firebox. It is also used to clean the heat exchangers. The **Refractory/Chimney Tee cleaning tool** is used to clean ash from the Reaction Chamber and to clean the chimney tee.

Refer to the Maintenance section for more information.

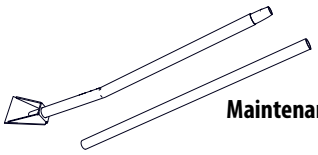

Maintenance Tool

Cleaning Rod

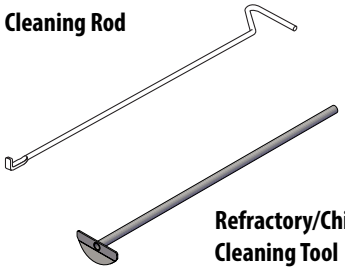

Refractory/Chimney Tee Cleaning Tool

Foundation

The outdoor furnace may be installed directly on stable, level ground without the necessity of a foundation, although installing the outdoor furnace on a foundation offers many advantages. The outdoor furnace is less likely to move due to frost heaving. A foundation keeps the area directly around the outdoor furnace free of standing water and can help to keep unwanted pests out. It can also raise the furnace up to provide a more comfortable height of the firebox door opening.

If the ground is unstable, one option is to use patio blocks under the perimeter of the base. Another option is to pour a concrete foundation.

To install the outdoor furnace on a concrete foundation, refer to the illustration for dimensions and for the location of the hollowed-out area for each model. A 4" to 6" (10 to 15 cm) thick concrete slab works well; however, a thicker slab may be used to obtain the desired door opening height.

If the area for the concrete slab is unstable and/or affected by frost heaving, consider installing 2" closed-cell insulation beneath the front portion of the slab and under the area of the ground used for walking.

⚠ CAUTION

Do not use any combustible materials for the foundation.

NOTE: The installation surface or foundation must be noncombustible. The hot supply and return lines must also be protected from possible exposure to sunlight, fire or physical damage that may be caused by an occurrence outside the outdoor furnace enclosure. Foundations may consist of concrete, crushed rock or patio blocks.

Classic Edge 960
(Foundation Optional)

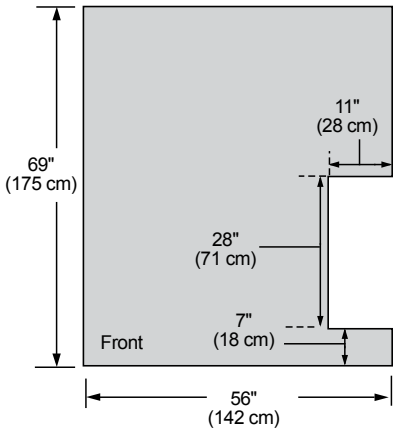

⚠CAUTION
Do not use any combustible materials for the foundation.

Outdoor furnace must be installed on a noncombustible surface or foundation that incorporates an enclosure that will prevent supply and return lines from possible exposure to sunlight, fire, or physical damage that may be caused by an occurrence outside the outdoor furnace enclosure. Foundation may consist of concrete, crushed rock, or patio blocks.

Access to Ports on Outdoor Furnace

Ports are provided that allow mounting circulation pumps on the outdoor furnace. Refer to the illustrations in this section for proper supply and return line and pump installations for your model.

NOTE: The Installation Guide provides more information on pump selection. For even more detailed information, see the Hydronic Component Selection Guide (p/n 2482), available from your Central Boiler dealer.

Classic Edge 960 Model – 3-Pump Configuration

3 - Pump Parts List*		
Qty	p/n	Description
2	118	Close Nipple, 3/4"
2	198	Ball Valve, 3/4"
2	224	Isolation Flange Kits, 3/4"
1	225	Isolation Flange Kits, 1-1/4"
2	274	90° Street Elbow, 3/4"
2	296	Swing Check Valve, 3/4"
2	409	Close Nipple, 1-1/4"
1	410	Ball Valve, 1-1/4"
1	411	90° Street Elbow, 1-1/4"
3	536	Nipple, 3/4" x 7"
3	556	Power Supply Cord, 32"
1	582	6 Outlet Converter
4	1330	MPT to PEX, 3/4" x 1"
2	5643	Brass Clamp, 1-1/4"
1	5871	Swing Check Valve, 1-1/4"
4	5926	Stainless Steel Clamp Crimp Ring, 1"
1	6593	Grounding Rod Kit
1	5000015	Nipple, 1-1/4" x 2-1/2
3	5800033	0015e3 Pump

*Parts and accessories sold separately. Pump size may vary.

For illustration purposes only.

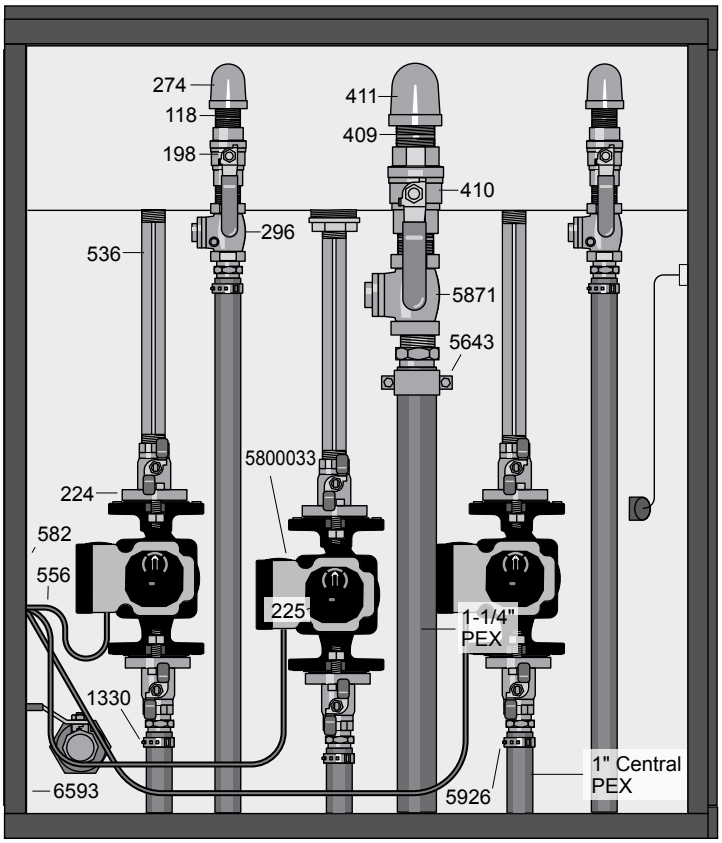

NOTE

Grounding Rod Kit (p/n 6593) must be installed with every furnace.

Ground Rod Kit

The outdoor furnace must be electrically bonded to ground in accordance with the requirements of the authority having jurisdiction or, in absence of such requirements, with the National Electrical Code, ANSI/NFPA 70 and/or the Canadian Electrical Code Part 1, CSA C22.1 Electrical Code.

Install a Ground Rod Kit (p/n 6593) and connect it to the outdoor furnace.

1. In the water line trench near the outdoor furnace, drive the ground rod into the ground until the top of the ground rod is below the ground surface.
2. Route the ground wire from the ground rod under the outdoor furnace base and over to the frame of the outdoor furnace.
3. Secure the ground terminal with a cap screw (1/4" x 3/4"), star washer and nut. Secure the ground wire to the terminal; then secure the ground wire to the ground rod with the clamp. Tighten all hardware securely.

NOTE: A hole for the ground terminal has been pre-punched in the outdoor furnace base near the pumps.

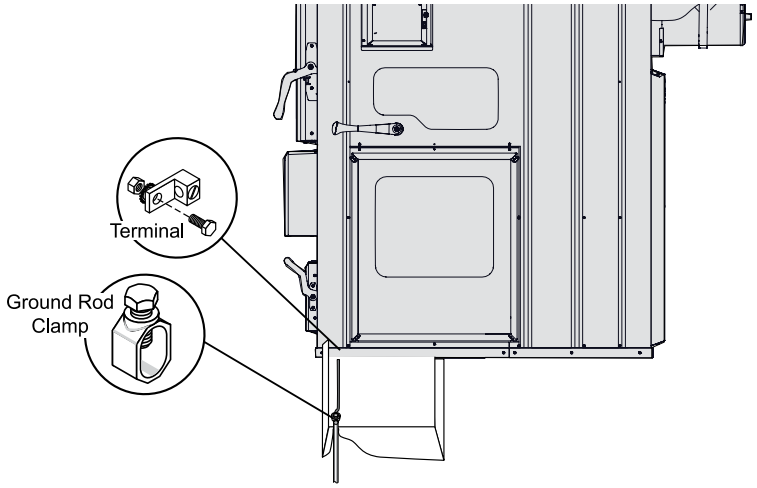

Detailed Furnace Installation Variations

Visit CentralBoiler.com to access a library of detailed illustrations for connecting to a wide variety of existing heating systems and for other heating options.

Furnace Installation - Connecting to Your Existing System

A common installation is to connect the outdoor furnace to an existing water heater and then to an existing forced air system. A water-to-air heat exchanger is mounted in the plenum or duct work of the existing furnace. Heated water from the outdoor furnace either continuously flows through the water-to-air heat exchanger or is diverted through a 3-way zone valve. When the thermostat senses the need for heat, the fan on the existing furnace forces air through the heat exchanger, transferring heat throughout the existing ductwork.

NOTE: There are numerous ways to connect to your heating system. Refer to the Central Boiler Outdoor Furnace Installation Guide for other installations.

Typical Installation

Connecting to Water Heater and Forced Air Furnace

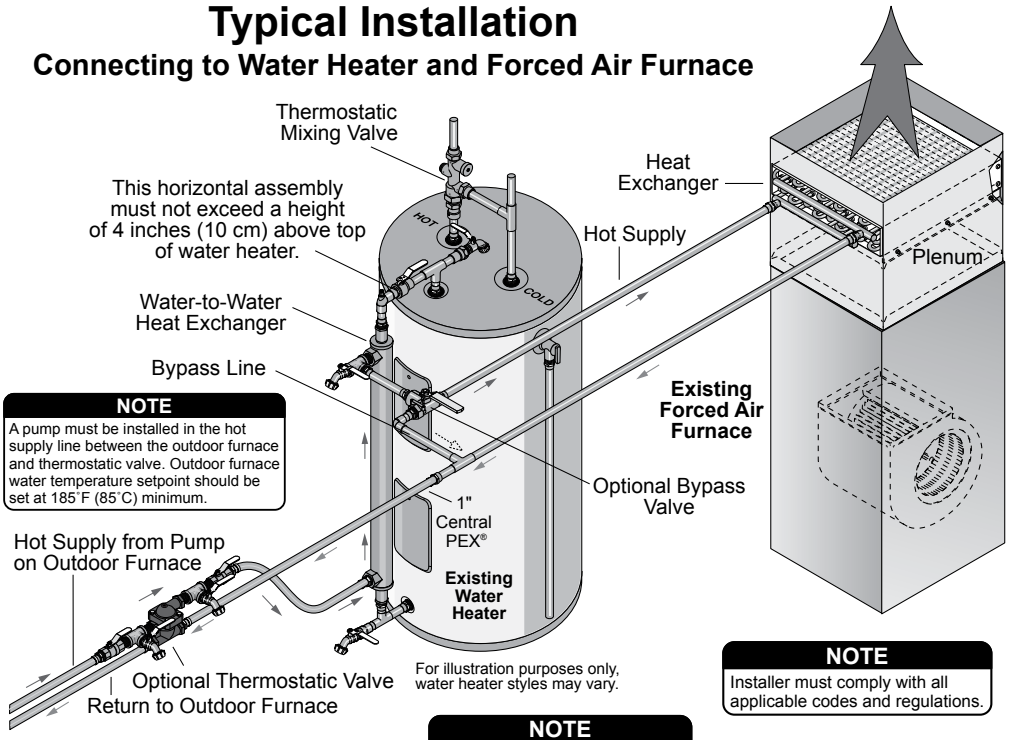

NOTE
Installer must comply with all applicable codes and regulations.

NOTE
Any electrical installation should be done by a qualified installer in accordance with applicable codes.

NOTE: A certified electrician must do the electrical installation.

Remote Thermal Storage Installation

Connecting to Remote Thermal Storage Tank

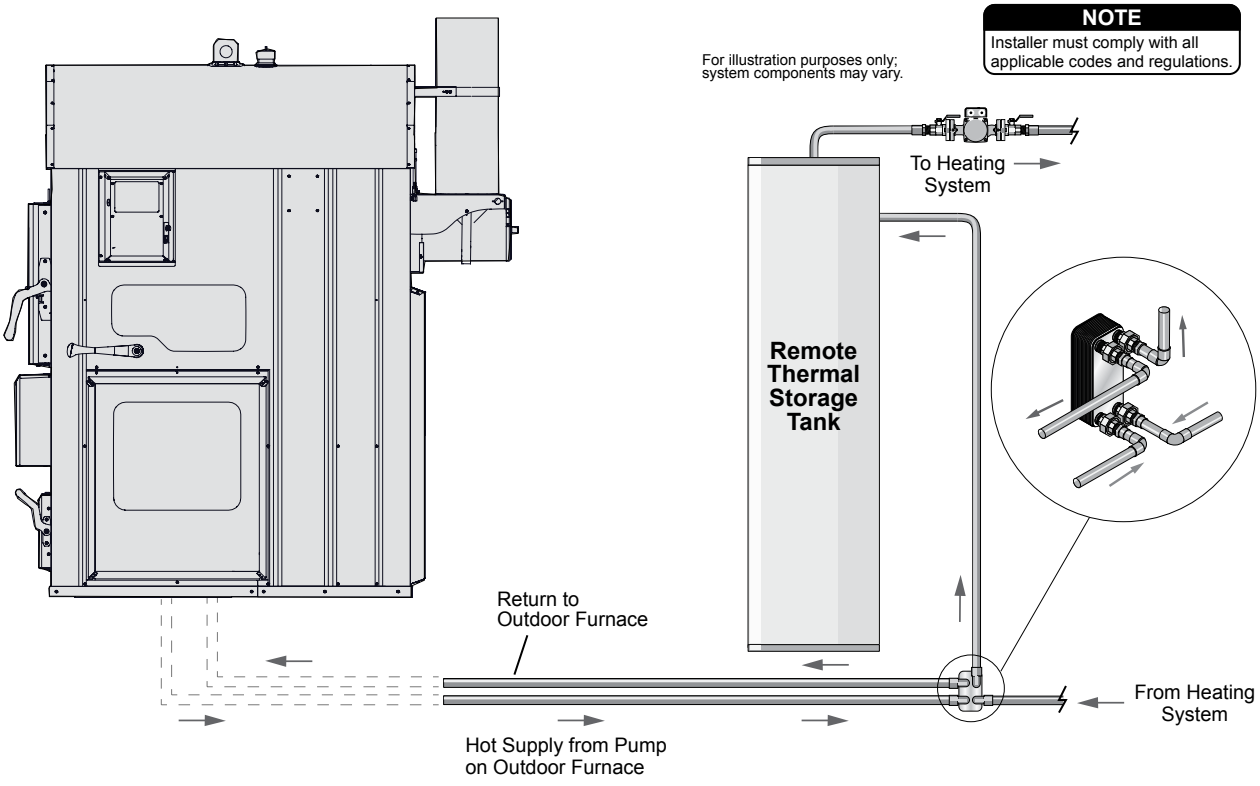

Outdoor Wood Furnace Best Burn Practices

1. Read and follow all operating instructions supplied by the manufacturer.
2. FUEL USED: Only those listed fuels recommended by the manufacturer of your unit. Never use the following: trash, plastics, gasoline, rubber, naphtha, household garbage, material treated with petroleum products (particle board, railroad ties and pressure treated wood), leaves, paper products, and cardboard.
3. LOADING FUEL: For a more efficient burn, pay careful attention to loading times and amounts. Follow the manufacturer's written instructions for recommended loading times and amounts.
4. STARTERS: Do not use lighter fluids, gasoline, or chemicals.
5. CHIMNEY RECOMMENDATIONS: In higher populated areas, extend the chimney to a height above the roofs of surrounding buildings.
6. Always remember to comply with all applicable state and local codes.

Be considerate of neighbors when operating your furnace. If you use your furnace in the summer months, be certain your chimney exhaust is not adversely affecting neighbors with open windows.

Chimney Recommendations

In higher populated areas, extend the chimney to a height above the roofs of surrounding buildings. Use Central Boiler Chimney Extensions when extending the chimney. When only the standard eight feet (2.4 m) of chimney are used, the sections must be secured at the connection joint with four (4) screws to stabilize the extension.

Chimney Installation

NOTE: Instructions for installing chimney sections and the chimney brace assembly are also provided with the furnace.

1. Remove the two slotted hex screws securing the Chimney Slide to the Chimney Support.
2. Remove the six self-tapping screws from the slot in the Chimney Brace Support. These screws are used to assemble the chimney sections.
3. Remove the single slotted hex screw securing the Chimney Strap to the Chimney Brace Support.
4. Install the rope seal at the bottom of the first chimney section; then assemble the chimney as shown.
5. Mount the Chimney Slide to the Chimney Support with two slotted hex screws. Do not tighten completely to allow the Chimney Slide to move.
6. Level the chimney front to back; then position the Chimney Slide against the chimney and completely tighten the two slotted hex screws.
7. Wrap the Chimney Strap around the chimney and secure with a slotted hex screw.
8. Secure the base of the chimney and the joint between the first two chimney sections with three self-tapping screws.

Chimney Section Installation and Chimney Brace Assembly

Illustration for reference only.
Refer to instructions provided with furnace for more information.

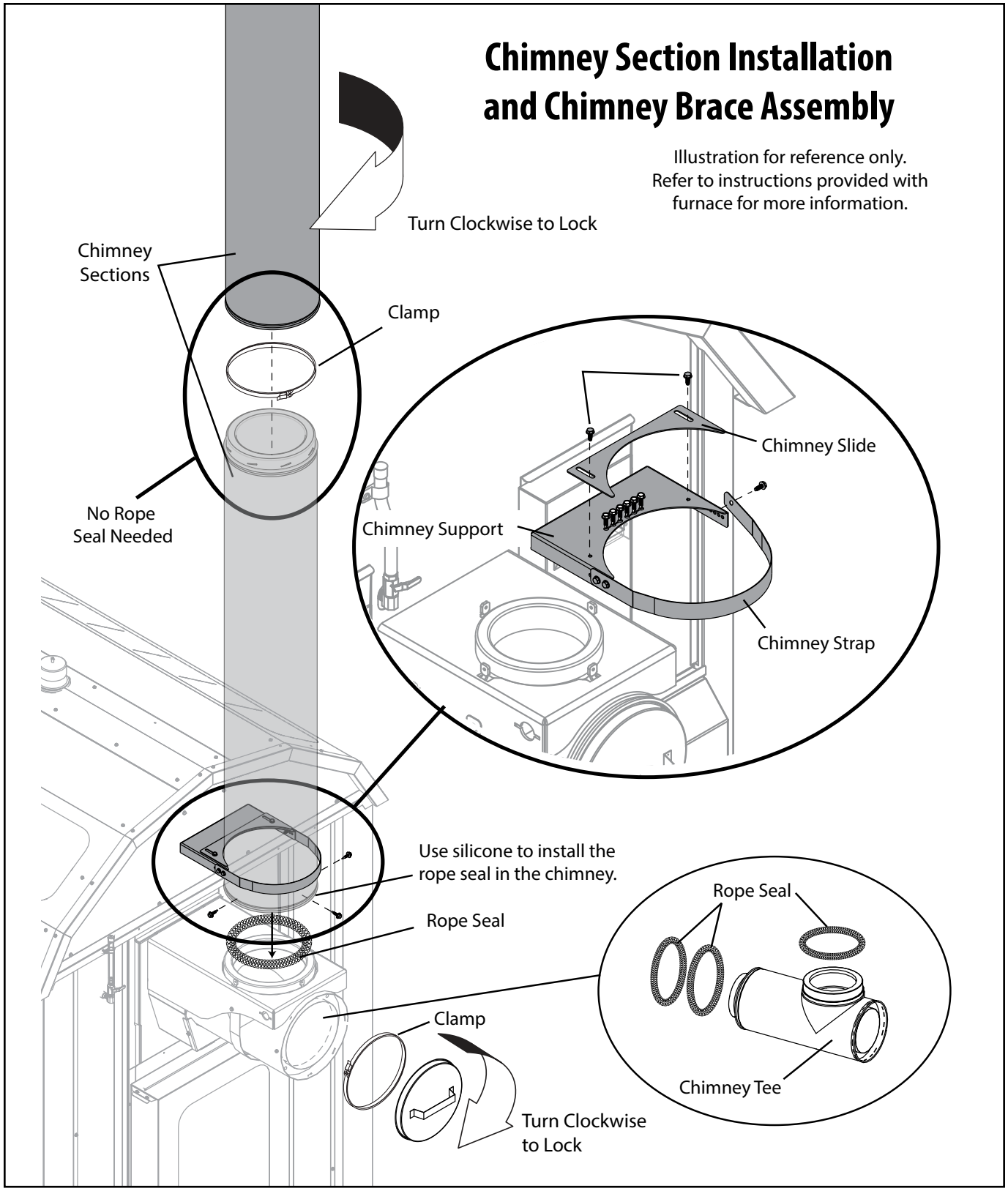

If extensions are added to the standard eight feet (2.4 m) of chimney, the chimney should be reinforced appropriately. The illustration shows chimney support recommendations when three or more sections are used. When adding sections of chimney, make sure that there is nothing within the fall zone of the chimney that could be damaged. If something is located within the fall zone and cannot be removed, guy wires or braces may need to be installed to prevent a falling chimney from causing damage.

NOTE: If more than three 4-foot (1.2-m) sections of chimney are used, a support (e.g., a pole, pipe or other structural support) may be installed from the ground that can withstand wind. Other reinforcement recommendations are shown.

NOTE: For chimney extensions or chimney replacement, use only genuine Central Boiler chimney components. Parts are available from an authorized Central Boiler dealer.

The installation of a spark arrestor is recommended, particularly where there are dry conditions or where there is combustible material near the unit, unless the installation of a spark arrestor is prohibited by local requirements.

NOTE: If the screen is left on the chimney cap, the spark arrestor should be inspected and cleaned as needed.

Use common sense to avoid potential fires, including exercising caution when disposing of ashes, cleaning and refueling. Keep all highly combustible materials (e.g., gasoline, propane, leaves, pine needles, etc.) away from an operating unit at all times. Take special precautions in windy conditions.

NOTE: You may need to increase the chimney height if conditions occur that force exhaust to low levels.

Chimney Reinforcement Recommendations

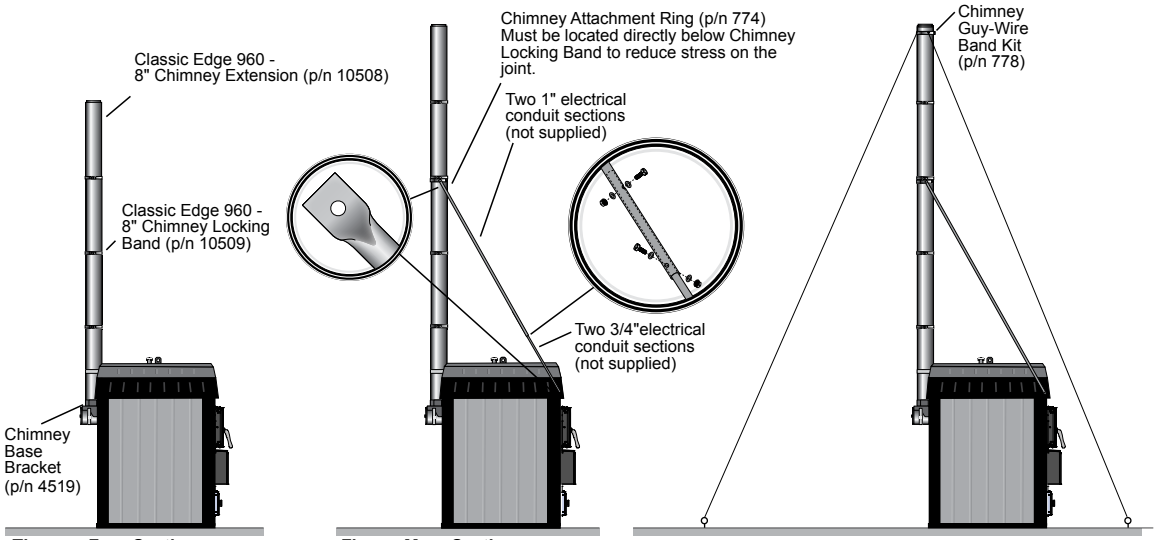

Three or Four Sections
When three or four sections of chimney are being used, a Chimney Base Bracket Kit (p/n 4519) is recommended.

Five or More Sections
When five or more sections of chimney are being used, a Chimney Base Bracket Kit (p/n 4519) and a Chimney Attachment Ring (p/n 774) are recommended.

Fall Zone
If objects are placed in the fall zone of the chimney, a Chimney Guy-Wire Band Kit (p/n 778) or additional bracing is recommended.

NOTE
- Additional bracing may be necessary in certain areas such as those subject to severe weather, winds, freezing rain, etc.
- Inspect all bracing bi-annually for integrity.

WATER QUALITY AND MAINTENANCE

Test Supply Water

Test a sample of the supply water (makeup water) that will be used to fill the outdoor furnace (softened water is recommended). Test strips for testing pH are included in the water test kit which is provided with the outdoor furnace.

1. Collect a small sample of the water to be used to fill the outdoor furnace in a clean container.
2. Dip the pH test strip from the provided test kit in the water sample. Shake excess water off the test strip. Compare the color of the test strip to the chart provided to determine pH level.
3. If the pH level is between 6.5 and 8.0 and there are no other known water quality problems, then the outdoor furnace may be filled with this water.
4. Water that has a pH level of less than 6.5 or greater than 8.0, or that has other known water quality problems, should not be used to fill the furnace. Instead, water should be supplied from a different source.

Adding Initial Water Treatment

⚠ CAUTION

Avoid damaging your furnace and voiding your warranty. Add water treatment BEFORE adding water to the system. Water treatment in your outdoor furnace is just as important as the oil in a car's engine.

MolyArmor 350 Corrosion Inhibitor (p/n 2900630) gives optimum protection for the furnace water jacket and system parts when it is used to initially treat the water and is maintained at a minimum of 350 ppm of moly and pH level between 8.0 and 9.5. One unit of MolyArmor 350 is a 1-gallon (3.78-liter) container.

MOLYARMOR 350 TREATMENT AMOUNTS	
Classic Edge 960	2.5 gallons

1. Add the recommended amount of MolyArmor 350 to the outdoor furnace.

NOTE: If the system has a larger than normal water capacity, more MolyArmor 350 should be added at a recommended rate of 6.5 oz. (190 ml) per 10 gallons (37.8 liters) of system water. One unit (1 gallon or 3.78 liters) of MolyArmor 350 will treat 200 gallons (757 liters) of system water.

2. Fill the furnace and system using the instructions to ensure air is purged from the system - refer to Installation Guide.

Immediately Heat the System Water

1. Refer to Cold Start Initial Fire Up to start the outdoor furnace. Bring the water temperature up to 185˚F (85˚C), turn on the pump(s) and let run for 24 hours to circulate the system water. If this is the initial startup of the furnace, at this point a proper water sample can be taken.

NOTE: It is important to bring the water in the system up to operating temperature (i.e., 185˚F or 85˚C) immediately after filling the system. This also applies any time water is added to the system.

NOTE: The sight gauge valve should always be closed except when checking water level. Water will automatically drain from the sight gauge tube. Remember that this type of valve requires only 1/4 turn to open or close.

2. Check the system for leaks again. Inspect all fittings and hose ends for any signs of leakage; repair as necessary. If a screw-type clamp has been used, it may be possible to stop a very slow leak at a hose clamp by tightening the clamp after the system has warmed up and the poly becomes more pliable. It might also be necessary to install a second hose clamp with the screw positioned on the opposite side.

Test the Treated System Water

After circulating the water in the system for at least 24 hours, test the treated system water for the recommended moly (at least 350 ppm) and pH level (between 8.0 and 9.5).

⚠ CAUTION

The water in the sight gauge may be hot. Use caution when obtaining a sample.

1. To obtain a system water sample, bend the sight gauge tube away from the outdoor furnace. Before collecting the sample, open the valve and drain about a quart of water from the sight gauge tube; then carefully fill the sample container without contaminating the sample. **Be sure to properly install the sight gauge tube and close the valve when finished.** The water in the sight gauge valve and tube will drain when the valve is closed.

2. Dip a pH test strip from the test kit in the water sample. Shake excess water off the test strip. Compare the color of the test strip to the chart provided to determine pH level. The pH of the treated water should be between 8.0 and 9.5.

3. Follow the instructions provided in the water test kit to test the moly level of the treated system water.

Maintenance Levels

Test the pH and moly levels after the first three months and every six months thereafter, and after adding water to furnace.

NOTE: It should not be necessary to add water to the outdoor furnace more frequently than once every twelve months. If it is more frequent, either there is a leak in the system or the outdoor furnace is boiling because of improper operation or maintenance (see Troubleshooting Section in the Owner's Manual). Be sure to locate and repair the problem immediately. Frequently adding water can cause deterioration in the water jacket. Each time water is added, refer to Water Quality and Maintenance in the Owner's Manual for water testing procedures. If indicated by test results, add MolyArmor 350 as required. Deterioration due to improper operation and/or maintenance is not covered by warranty.

Send in Initial Water Sample

Your owner's packet contains a Water Sample Kit for submitting an initial water test. Additional Water Samples Kits are available from your Central Boiler dealer.

INITIAL WATER SAMPLE: You are required to submit an initial water sample within 30 days of purchase of your outdoor furnace. EXCEPTION: if your outdoor furnace is not being installed within 30 days of purchase, you must email Central Boiler (service@centralboiler.com) with an estimated installation date, your name and your furnace serial number. When the furnace installation is complete, send the water sample **within 10 days of the initial fill**.

TO CHECK STATUS OF YOUR WATER SAMPLE: Check the status of your water sample at:

CentralBoiler.com/w25

You will need your serial number and postal code. Please allow 2-3 weeks for results to be available.

Annual Water Sample

ANNUAL WATER SAMPLE: You are required to submit a water sample yearly prior to the anniversary date of your initial installation. Record the anniversary date below:

_____

DATE OF INSTALLATION

Water Samples

Maintaining the corrosion inhibitor at a proper level is imperative to preventing corrosion failures. To qualify for the 25 year warranty, you must follow the instructions in the Owner's Manual and the Installation and Initial Water Treatment Guide concerning initial water treatment and maintenance. When the outdoor furnace is initially put into service, and once a year after that, you are required to submit a water sample to confirm proper maintenance and water treatment. No warranty claim can be approved unless the outdoor furnace registration and the required water tests verifications are on file at Central Boiler.

NOTE: It is your responsibility as owner to ensure that your water sample information is accurate and that you submit your samples on a timely basis as required by the warranty for your stainless steel outdoor furnace. Failure to do so will result in a one year warranty.

SYSTEM MAINTENANCE

An important part of outdoor furnace maintenance is controlling the quality of the water in the outdoor furnace.

Water Test Kits and Test Results

DATE	pH LEVEL	MOLY LEVEL

Record the results of pH and Moly level tests in the table above.
If additional space is needed, record on a separate sheet of paper.

It is very important to keep record of water test results (including the date, pH and Moly level). The pH and Moly test strips and indicator have a shelf life of approximately two years that can affect their accuracy. Test kits should be stored in a dry area at room temperature to obtain maximum accuracy over a longer period of time.

Biological contamination can occur if the furnace is not heated up to 185˚F immediately after filling it with inhibitor and water as directed.

NOTE: ANY time water is added to the system, it is extremely important to bring the water temperature up to operating temperature (185˚F) as soon as possible, even if it is during the off-season. Failure to bring the water in the system up to operating temperature immediately after filling the system can allow bacteria present in the water to multiply and may increase the potential for corrosion in the sytem.

If the test indicates a significantly lower-than-recommended pH level (below 8.0), add MolyArmor to increase the pH level.

POST HEATING SEASON MAINTENANCE

The water should be left in the outdoor furnace if the outdoor furnace is not being used for an extended period of time.

1. Refer to the Preventive Maintenance Schedule for a list of operations to perform.
2. Shut off the power supply to the outdoor furnace.
3. Place a cover over the chimney to keep rain from entering the outdoor furnace. Clean and oil the chimney flue to the firebox.

Flushing the System

If the system water is brown or orange, it is an indication that the corrosion inhibitor level has not been maintained correctly and corrosion is present in the water jacket. Sludge Conditioner (p/n 166) can be used by circulating the recommended amount through the furnace **for one week** to help clean some of the corrosion from inside the water jacket before flushing, draining and refilling with water and the correct amount of MolyArmor 350.

NOTE: Use one unit of Sludge Conditioner per 200 gallons of system water.

1. De-energize the pump(s) and close the supply and return valves on the outdoor furnace. Remove the inspection panel and insulation covering the drain to gain access to the drain valve. Remove the cap and connect a hose to the drain.
2. Open the drain to drain the system; then flush the top of the firebox and bottom of the water jacket beneath the firebox using a wand placed in the vent.

⚠ CAUTION

Completely clean out the firebox before draining water from the outdoor furnace.

Draining Treated System Water

MolyArmor 350 is composed of common materials. Molybdenum compounds characterized as nontoxic in US Public Health Bulletin 293, by the Federal Hazardous Substances Labeling Act, and by the Occupational Safety and Health Act. However, in keeping with good safety and environmental practices, dispose furnace water in accordance with federal, state and local regulation. Unless regulation prohibits, you may drain the outdoor furnace to a septic system. If doing so, however, be careful not to overflow the septic system.

Do not drain the outdoor furnace in such a manner that the drain water could in any way contact surface water, stream, river, estuary (where a river meets a sea), lake, pond, ocean or other types of waters.

Do not drain to any location within 50 feet (15 meters) of any water well.

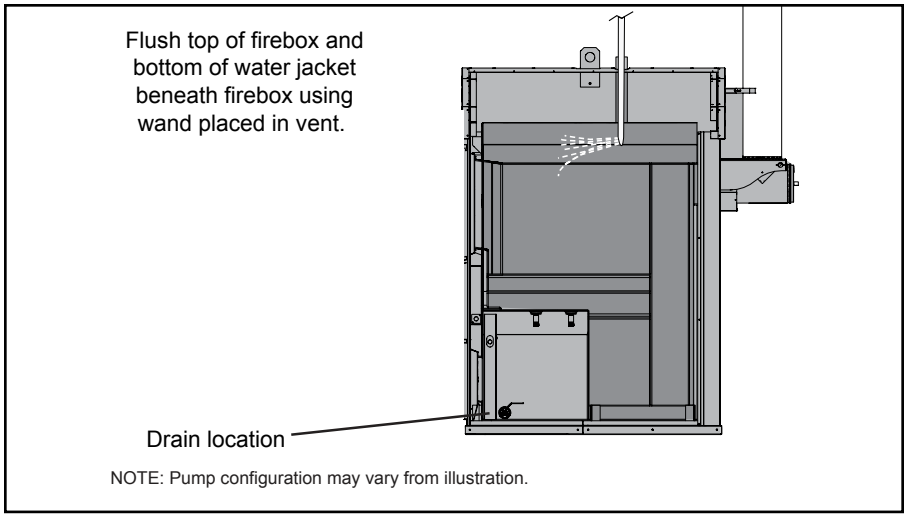

3. Close the drain valve securely and replace the cap on drain after flushing the outdoor furnace.
4. Add recommended amount of MolyArmor 350.
5. Fill the outdoor furnace following the procedure in Finalizing the Installation in the Installation Guide. Start the pump(s) and bring the water temperature up to operating temperature (185˚F) for 24 hours with the system circulating to thoroughly mix the MolyArmor 350.

NOTE: ANY time water is added to the system, it is extremely important to bring the water temperature up to operating temperature (185˚F) as soon as possible, even if it is during the off-season. Failure to bring the water in the system up to operating temperature immediately after filling the system can allow bacteria present in the water to multiply, which may increase the potential for corrosion in the system.

6. Insulate the area using a mat of fiberglass insulation.
7. Install the inspection panel and secure with self-tapping screws.

Adding Antifreeze to Outdoor Furnace System

Most outdoor furnaces are installed **without** antifreeze when an existing heating system is in place and there is no anticipation of leaving the outdoor furnace unattended for extended periods of time (10 days or more). If the building being heated has an alternate heat source, system water may be kept from freezing by running the circulating pump(s) and drawing heat from the existing furnace or boiler in the building.

To prevent freezing if the outdoor furnace is not fired for extended time periods or if lengthy power outages are anticipated during cold weather, a nontoxic propylene glycol may be used in the system. Some types of antifreeze that contain various inhibitors have been known to create problems like coagulation and jelling. To prevent potential problems, **do not use propylene glycol that is premixed with inhibitors**. MolyArmor 350 is compatible with (raw) propylene glycol. It is important to use MolyArmor 350 with straight propylene glycol for corrosion protection. If adding antifreeze to the system, it is imperative that the entire system contain **at least 30% antifreeze concentration mixed with softened, reverse osmosis or deionized water** to prevent bacterial growth and minimize minerals in the system. Bacterial growth is likely to occur with low antifreeze concentrations and can cause corrosion in the furnace water jacket and/or clogging of heat exchangers. To confirm the antifreeze solution is adequate and to kill bacteria, immediately heat the system up to 185˚ F, allow the pumps to circulate for at least 24 hours and then obtain a sample of the system water. Using an antifreeze tester, the solution must be protected to 10˚F (-12˚C) or below.

NOTE: If using antifreeze, test the pH and Moly levels once each month. If the bacterial issues occur, the pH will decrease.

NOTE: Be sure to adhere to all warnings and precautions on the antifreeze label.

NOTE: Do not use automotive or RV types of antifreeze.

Wood Selection and Preparation

Before You Start Operating Your Classic Edge Outdoor Wood Furnace

Be sure to read carefully and observe all of the information in the entire Owner's Manual.

If any questions arise that cannot be answered by the information in this manual, be sure to contact your dealer.

For the best results, it is best to burn seasoned split wood. However, it may be possible to burn some unsplit wood with the split wood depending on quality, size, moisture content and wood type. Properly seasoned wood has a moisture content of 20% or less. It is darker, has cracks in the end grain, and sounds hollow when smacked against another piece of wood. Most wood needs to be split to dry down to 20% within a year. Wood between 4" and 8" (10 and 20 cm) in diameter works well in most cases. Pieces of wood that are too large can reduce output capacity because they burn slower.

- Wood that works well in most cases:
  - Is between 4" and 8" (10 and 20 cm) in diameter
  - Is approximately 60-70% of the length of the firebox
  - Typically weighs 10-15 pounds per cubic foot for heavy heat loads
- Pieces of wood that are too large can reduce output capacity because they burn slower. Wood that is too long can cause bridging.
- Seasoned wood burns more efficiently, minimizes the amount of creosote formation and reduces emissions.
- Maintain a quantity of smaller, drier pieces of wood for relighting the fire if the wood load is burned very low or becomes completely empty.
- Green wood contains about 50% moisture by weight. Energy is required to heat the wood and evaporate the moisture - energy which could have been used to provide heat for the building. The illustration below shows that burning drier, seasoned wood provides more energy for heating compared with burning green, unseasoned wood that uses more energy to evaporate the moisture and provides less energy for heating.

NOTE: Do not store wood within the outdoor furnace installation clearances or within the spaces required for fueling, ash removal and other routine maintenance operations.

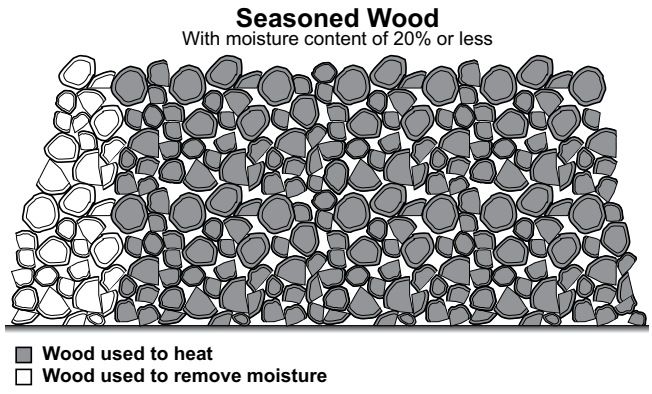

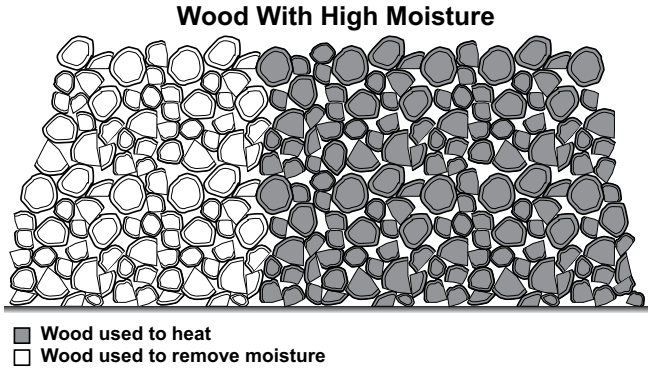

Operating Instructions

FIRESTAR COMBUSTION CONTROLLER

Refer to the FireStar Combustion Controller Operation Manual for information about the combustion controller.

How the Classic Edge Works

Because of its highly efficient and clean-burning design, the Classic Edge operates differently than other types of wood-burning devices. Understanding a few basic principles will help you operate the Classic Edge as it was designed, maximizing its performance, heat transfer and longevity.

NOTE: For proper operation, the fuel must match the heat load, the furnace must be maintained to ensure proper air flow, and the water temperature must be kept above 150˚F (66˚C).

1. The combustion air fan pressurizes the airbox located at the front of the outdoor furnace. Primary air flow, regulated by an actuator motor, flows into the firebox through combustion air inlets located on the front and sides near the bottom. Secondary air is regulated by a second actuator motor that allow air flow through the air charge tube. Combustion starts in the firebox near the bottom of the wood load.

Operating with Properly Seasoned Wood

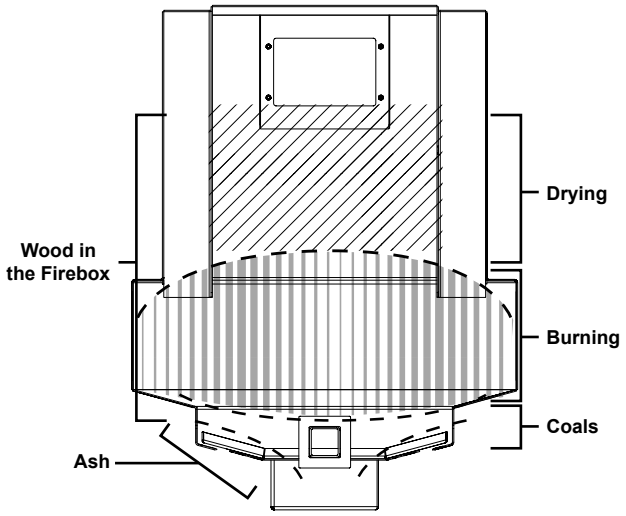

- Burns more efficiently
- Minimizes amount of wood used
- Reduces emissions
- Extends life of furnace
- Reduces bridging

Operating with Wood with Too Much Moisture

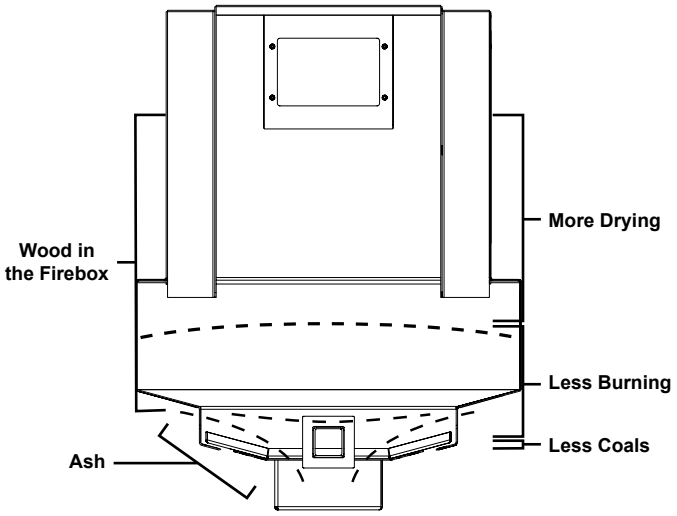

- Burns less efficiently
- Increases amount of wood used
- Lowers combustion rates
- Increases maintenance requirements
- Increases bridging

NOTE: When the volume of burning wood is greater than the volume of drying wood, the outdoor furnace operates more efficiently.

NOTE: The combustion air inlets must be visible (i.e., ash must be kept below the combustion air inlets as shown).

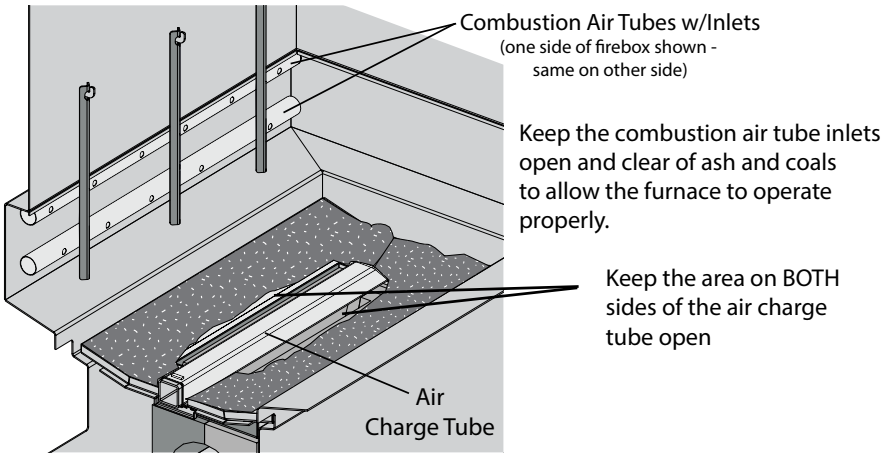

2. Gasified fuel exits the bottom of the firebox alongside and under the air charge tube, through the mixing channel and down to the Fusion Combustor and Reaction Chamber™. Final combustion occurs in the Reaction Chamber where extremely high temperatures aid in complete combustion. The chimney creates a draft (negative pressure) which helps to draw exhaust gases from the furnace.

3. Heat is transferred to the water from the hot gases as they move through the firebox, the Reaction Chamber and the heat exchanger.

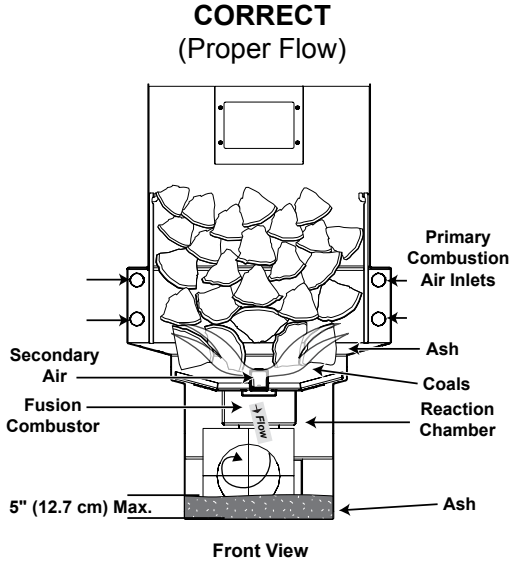

NOTE: The illustration shows the Classic Edge operating correctly with proper combustion air flow and with the wood properly loaded.

NOTE: A key point to remember about the operation of the Classic Edge is that as wood burns, the combustion gases flow down through the bottom of the firebox so the proper flow must be maintained as shown.

NOTE: Refer to the General Troubleshooting Information for more information on outdoor furnace operation and for conditions to avoid.

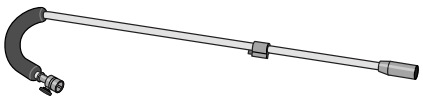

Outdoor Torch

The optional Outdoor Torch (p/n 2900325) is an excellent tool for starting a fire. Attaches quickly to an external propane tank and can be directed at the bottom of a wood pile for quicker, easier combustion.

Cold Start Initial Fire Up

NOTE: These procedures apply to initial firing from a cold start at the start of the heating season.

⚠ CAUTION

Do not burn plastic, garbage, treated wood or fuels not listed for this outdoor furnace.

NOTE: Before firing the outdoor furnace for the first time, make sure the proper amount of MolyArmor 350 has been added and the water level is 1" below the full mark on the sight gauge, as the water will expand when heated.

Two options are provided for a clean, easy startup. Using lump charcoal is the easiest and fastest method. Be sure the wood (including the kindling) is dry for the best results.

NOTE: During startup, the Reaction Chamber percentage will increase as the combustion process ramps up. Optimum burn occurs when the Reaction Chamber percentage is maintained between 70% and 100%. The drier the wood that is used during startup, the faster these percentages can be reached.

Startup Option A - Lump Charcoal

NOTE: Keep the bypass door closed for this procedure.

1. Disconnect the heat load draw by turning off the pump(s).
2. Open the firebox door and add 10 pounds of lump charcoal to cover the charge tube.
3. Turn the controller on by pressing the **Power** ⏻ button; then press the Ignition Air button to turn on the primary combustion air for the initial fire up process when the firebox door is open.

Cold Start Initial Fire Up with Lump Charcoal

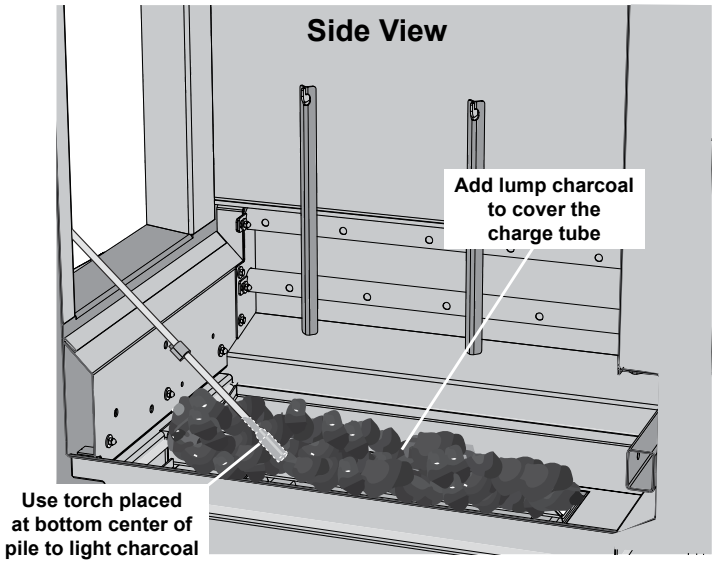

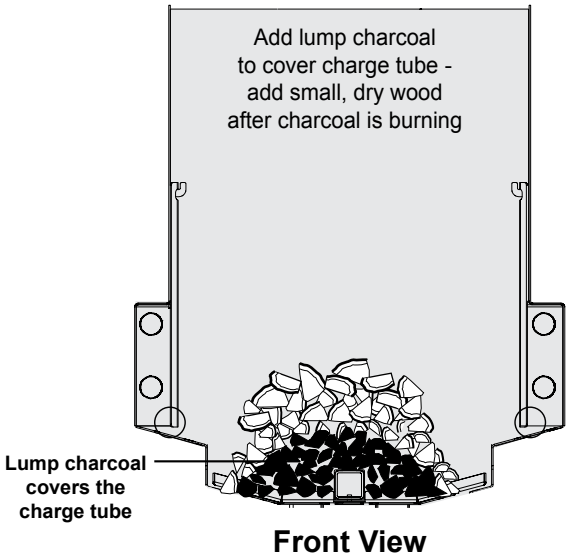

4. Ignite the lump charcoal making sure that the charcoal on both sides of the charge tube is burning.

5. Add small pieces of dry wood to a level just above the primary air tubes on the sides of the firebox.

6. Close and latch the firebox door.

⚠ CAUTION

Do not leave the firebox door open while the fire is burning. Damage to the door seal and paint on the front of the outdoor furnace will result and it could cause a dangerous build-up of gas in the firebox.

7. Allow the wood load to burn until the water temperature reaches 175˚F (79˚C). Turn on the pump(s) and let run for 24 hours to circulate the system water. If this is the initial startup of the furnace, at this point a proper water sample can be taken.

⚠ WARNING

When opening the firebox door, the door switch will shut off the primary air actuator motor while the firebox door is open. Do NOT disable the door switch.

Startup Option B - Dry Kindling

NOTE: Keep the bypass door closed for this procedure.

1. Disconnect the heat load draw by turning off the pump(s).

2. Open the firebox door and add small, dry kindling to cover the charge tube. Smaller kindling is preferred. It should be staggered and able to ignite and burn quickly for the initial fire. The intent is to make sure the combustion air will be able to flow past the charge tube and into the Reaction Chamber.

Cold Start Initial Fire Up with Dry Kindling

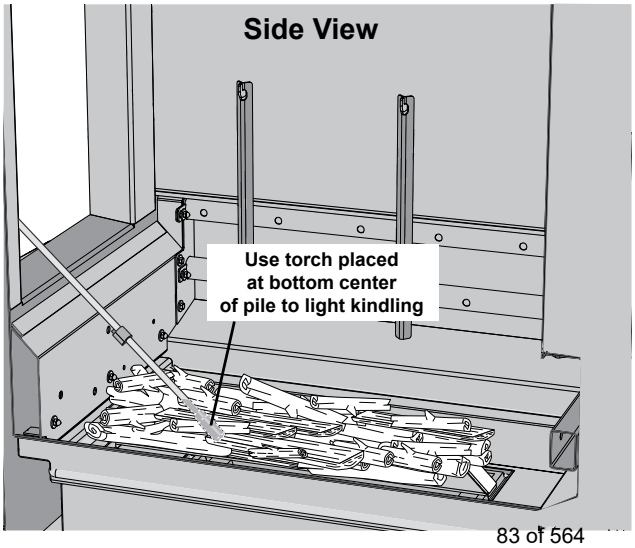

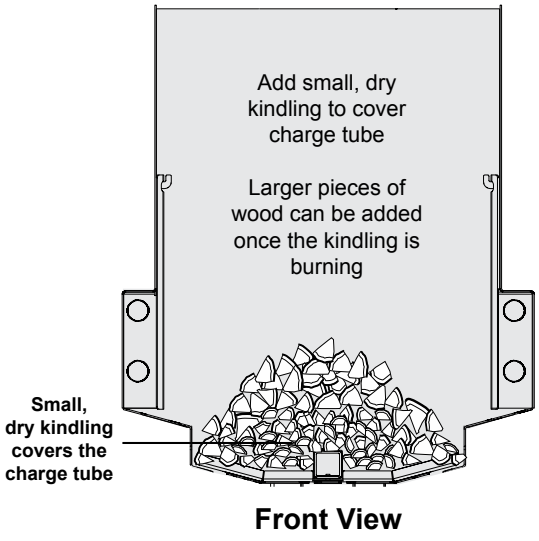

3. Turn the controller on by pressing the **Power** ⏻ button; then press the Ignition Air button to turn on the primary combustion air for the initial fire up process when the firebox door is open.

4. Ignite the bottom side of the kindling. Make sure the wood on both sides of the charge tube is burning. Once the kindling is burning, add larger pieces of dry wood to just above the primary air tubes.

NOTE: Add enough wood to bring the water temperature up to 175˚F (79˚C).

5. Close and latch the firebox door.

⚠ CAUTION

Do not leave the firebox door open while the fire is burning. Damage to the door seal and paint on the front of the outdoor furnace will result and it could cause a dangerous build-up of gas in the firebox.

6. Allow the wood load to burn until the water temperature reaches 175˚F (79˚C). Turn on the pump(s) and let run for 24 hours to circulate the system water. If this is the initial startup of the furnace, at this point a proper water sample can be taken.

⚠ WARNING

When opening the firebox door, the door switch will shut off the primary air actuator motor while the firebox door is open. Do NOT disable the door switch.

Adding Heat Load

NOTE: During initial start-up, a considerable amount of moisture from condensation will collect inside the firebox and heat exchanger and may drip out of the Reaction Chamber door. This is normal and the moisture will evaporate after the first couple of fuel loads.

1. With no heat load draw in the system, monitor the operation of the outdoor furnace until the water temperature reaches the water temperature setpoint.

2. Turn on the pump(s); then start a heat load draw in the system by turning up the thermostat in the house. Monitor the outdoor furnace for one hour or until another cycle occurs (i.e., outdoor furnace goes from combustion to idle mode). If the water temperature drops and does not recover to the water temperature setpoint within one hour of starting the heat load draw, the heat load draw should be shut off, allowing the furnace to cycle to the idle mode again.

NOTE: The outdoor furnace will not operate satisfactorily if the heat load is higher than the output capacity of the outdoor furnace.

3. At this point, there should be glowing coals established in the bottom of the firebox. The firebox can be filled with dry, seasoned split wood.

Ash Removal Frequency

During the first week of operation, check the level of ash in the Reaction Chamber every two days. Ash needs to be removed from the Reaction Chamber before it obstructs the combustion air flow for efficient operation. Clean the Reaction Chamber before it becomes 1/2 full of ash (approximately 5" or 13 cm deep in any area of the Reaction Chamber).

Adding Wood

1. Slowly lift and push the bypass door handle toward the back of the outdoor furnace to open the bypass door; then wait for 15 seconds.

NOTE: The alarm is a reminder that the bypass door is open. During a cold start, it will continue to sound.

⚠ WARNING

Keep your face away and stay as far away as possible from the firebox door area when opening the door.

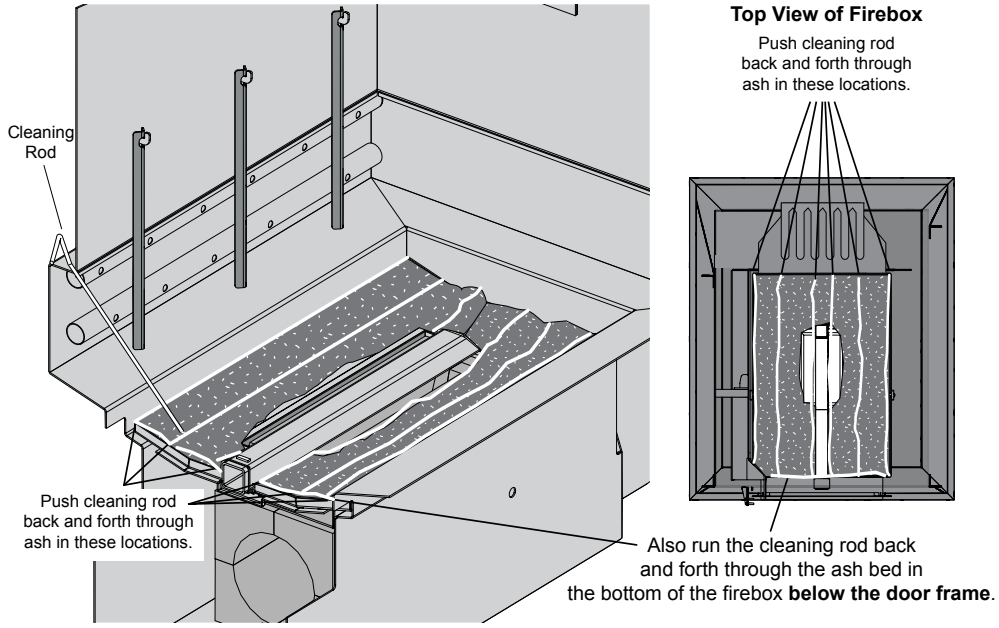

2. Unlatch the firebox door; then slightly open the firebox door and wait 10 seconds. Stay as far away as possible as the firebox door is opened because smoke and hot gases escaping through the firebox door opening could ignite. From a safe distance, observe the fuel load.

⚠ WARNING

Use extreme care when adding wood when wood or coals are already present. Very hot gases may be coming out of the firebox door opening.

OPERATING TIP

Run the cleaning rod through the coal bed every time before loading wood to help maintain proper air flow and optimize combustion.

3. Using the illustration as a reference, push the cleaning rod through the ash, coals and remaining wood in the bottom of the firebox to loosen it up, including a pass on each side of the air charge tube. Also run the rod through the ash bed back and forth in the bottom of the firebox below the door frame.

NOTE: Neglecting to push the cleaning rod through the ash and coals as described in Step 3 each time before wood is loaded can cause the ash bed to deepen and become compacted. This can result in poor heat output and combustion because of restricted airflow. Compacted ash will not fall into the Reaction Chamber; it will need to be removed with a shovel.

4. Some ash in the bottom of the firebox (but not alongside the charge tube) is necessary for the proper operation of the outdoor furnace. Ash acts as an insulator, keeping the glowing coals in the bottom of the firebox hot enough to restart the fire. When using the cleaning rod, some of the ash will fall into the Reaction Chamber and some ash with coals will remain. The coals remaining around the mixing channel (the area alongside the air charge tube) will create a clean, efficient burn.

5. The combustion air inlets must be kept open and clear of ash and coals to allow the furnace to operate properly. If needed, remove enough ash to keep the combustion air inlets free of obstruction.

NOTE: It is important to understand that when the water temperature setpoint (185°F) is reached, the combustion air is shut off until the water temperature drops to the setpoint minus the differential setting. During this cycle-off time there will be no active fire in the firebox. If the firebox door is opened, the wood might begin to burn again but will be shut down when the door is closed if the water temperature is above the setpoint. If the door is opened and closed when the water temperature is below the setpoint the fan will cycle on again to achieve the setpoint even though the differential point has not been reached. If the combustion cycle is activated with the water temperature at least to the differential below setpoint and the fire is not actively burning when the door is closed, first confirm that proper operating and maintenance procedures are being performed before considering testing mechanical components.

6. When refilling the firebox, the new wood load will ignite quickly and burn more efficiently if these instructions are followed. This will prevent creosote buildup in the heat exchanger, air channels or primary elbow. The operating procedures will maintain good air flow and very efficient combustion.

DAILY

- Run the cleaning rod through the ash and coal bed and along both sides of the air charge tube as shown on previous page to keep ash loose. **Use care near the refractory mixing channel.** This will allow excess ash to flow down into the Reaction Chamber. If the coal bed/remaining wood is more than 4 inches deep, it may be necessary to use the cleaning rod to open a passage through the coals on each side of the air charge tube. **Air flow down past the air charge tube is essential for a good combustion rate to be maintained. To confirm adequate air flow, cautiously open the Reaction Chamber door to visually identify the combustion air flow while the furnace is in a burn cycle with the fan on and the bypass closed.**

- To ensure the fire will maintain good combustion, it is important to refill the firebox when an adequate amount of the previous wood load is remaining (enough to provide enough heat and fire to dry and ignite the new wood load). If the coals burn out from under the new wood load and are unable to keep the fire going, there are not enough coals and wood left from the previous load. On Classic Edge Titanium HDX models with FireStar controller software version 6.7 or later, enabling the Easy Refire mode will help keep part of the wood load for a quicker, more efficient fire up after reloading. Easy Refire is enabled as default setting on version 6.72 and later.

- Be sure to fill the firebox with enough wood so there is adequate wood left the next time you load to dry and ignite the new wood.

- Keep in mind that burning dry, well-seasoned wood requires less coals to ignite the new wood load.
- Burning higher moisture wood or larger, unsplit wood will require that a larger amount of the previous wood load remain in the firebox to adequately ignite the new wood load. If there are not an adequate amount of coals or enough of the previous wood load to achieve a good hot fire and efficient combustion with Reaction Chamber temperatures, open the bypass door for a long enough time to get the new wood load burning well; then close the bypass. Refer to Cold Start Firing.
- If the furnace is being used in the fall and spring or on heat loads much lower than the main heating season, use a 25% wood load or whatever amount will be needed for the period of time between normal reloading.

WEEKLY (or as needed)

- Clean the heat exchanger weekly (or as needed) to prevent air flow restriction. When the operating procedure outlined here is used, there will be no creosote formation in the Reaction Chamber or heat exchanger passage.
- Clean ash out of the Reaction Chamber channel as needed. It is best not to allow the Reaction Chamber to fill to a depth over 1/2 full.
- Inspect and clean the chimney tee as needed to prevent restriction.
- Clean and inspect the spark arrestor (if one is being used) as needed.
- Review the operation and maintenance, and refueling tips videos available on the Online Support Center.

NOTE: If the furnace has been operated without adequate airflow and efficient combustion, it may be necessary to inspect and clean the primary combustion air inlets, air channels, primary air elbow, heat exchanger, and Reaction Chamber.

NOTE: If the fire goes out or keeps going out, the pulse timer can be adjusted to a longer duration and shorter time periods between idle pulses.

⚠ WARNING

When adding wood to the firebox, be careful not to get pinched between the wood and the door frame or any part of the outdoor furnace. Use extreme care with large pieces of wood that may be difficult to handle.

7. Inspect the firebox for crusty deposits on the walls and in the corners and use the maintenance tool or similar type of tool to scrape and remove. Use the maintenance tool to remove any thick deposits from the inside front corners of the firebox, down each side and across the top, as shown.

8. Use the maintenance tool to keep the front combustion air inlets, and the combustion inlets on both air tubes free of any buildup.

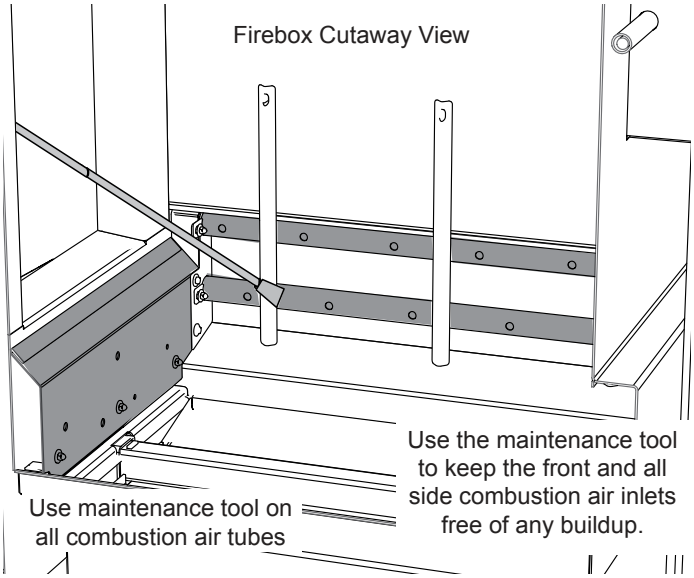

9. When loading, load the wood so that the combustion air inlets on the side of the firebox do not become blocked or restricted.

10. Close and latch the firebox door. **Do not use the firebox door to ram wood into the outdoor furnace. Do not operate the outdoor furnace with the firebox door open.** Combustion in the firebox cannot be controlled if the firebox door is left open or unlatched. If the firebox door is left open, an uncontrolled burn will result. To return to a controlled burn, close and latch the firebox door.

11. Wait for 15 seconds; then slowly pull the bypass door handle toward the front of the furnace and push down to close the bypass door.

⚠ WARNING

The firebox door must be closed and latched at all times except when filling the firebox with wood or damage to gaskets, paint, etc., may occur. Leaving the firebox door open may lead to a runaway fire. In the event of a runaway fire, close the firebox door.

Maintenance Schedule

PREVENTIVE MAINTENANCE SCHEDULE

Regular maintenance and inspections can help extend the life of your outdoor furnace and prevent high-cost repairs. This table is meant to serve as a general guideline until you become acquainted with how the outdoor furnace operates with your specific application.

OPERATION	SERVICE INTERVAL: Before first operation of season	Daily	Weekly	Monthly	Semi-Annually	Post Season	Other	See Section Number
Check water level.	●	●						1
Remove ash.			C			●		3
Scrape firebox door frame; use cleaning rod in ash.		A				●		8
Inspect firebox door seal.		A				●		4
Inspect and lubricate door latch bushings.						●	G	4
Inspect chimney and chimney tee.	●		●			●		5
Check vent cap.	●							2
Clean heat exchangers.	●		C			●	F	6
Inspect rear access heat exchanger door latches, seal and insulation							H	6
Inspect Reaction Chamber.	●		C			●		7
Inspect secondary air tube and refractory.						●		11
Inspect firebox and firebox ash area.	●	A				●		8
Inspect and clean combustion air inlets.	●		C			●	B	9
Inspect and clean the combustion fan and inlet screen.					D			10
Oil the combustion fan.						●		10
Check pH and moly levels of water.	●				D	●		E
Inspect primary and secondary combustion air elbows.						G		12
Grease bypass door handle.				F		●		13
Perform a complete cleaning.				F		●		14

NOTE: Check daily for build-up of creosote in the lower corners and around the air outlets until experience shows how often cleaning is necessary.

- A Daily, or as needed.
- B Twice a week.
- C Weekly until interval for your application can be determined.
- D When new, after three months, then every six months thereafter.
- E Refer to **Testing Treated Water in the Outdoor Furnace** (Installation and Initial Water Treatment Guide).
- F Frequency will vary depending on heat load requirements, type of wood used and the moisture content of the wood.
- G Or as needed.
- H Whenever rear access heat exchanger door is opened.

Control Locations

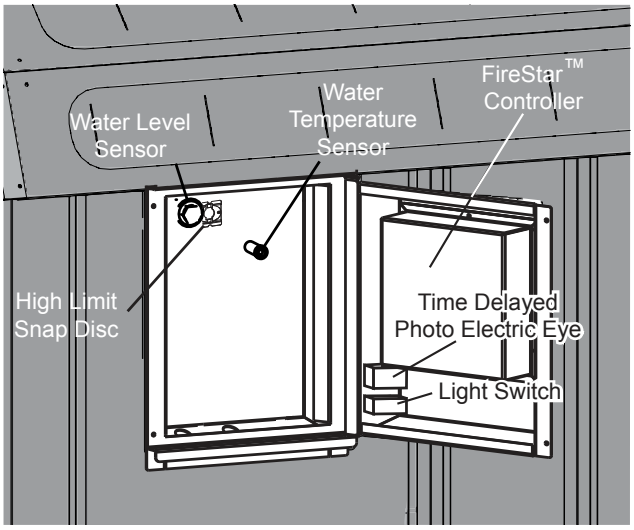

ROUTINE MAINTENANCE

⚠ CAUTION

Use only genuine Central Boiler Parts and Accessories if it ever becomes necessary to replace any component of the outdoor furnace.

Routine inspections and maintenance are essential to the proper operation and longevity of the outdoor furnace. The items indicated in the preventive maintenance schedule are intended to serve as a guideline. Actual intervals between inspections and maintenance may vary depending on a number of factors, including your heat load requirements, type of wood used, and outdoor temperatures.

NOTE: Proper maintenance of the firebox, Reaction Chamber, Fusion Combustor, heat exchanger, chimney transition box and chimney tee are essential for the outdoor furnace to function properly and for longevity.

⚠ CAUTION

Do not burn plastic, garbage, treated wood or fuels not listed for this outdoor furnace.

NOTE: Chloride or sulfurous gases can be generated if plastic or rubber is burned and will mix with the moisture from the wood to form hydrochloric or sulfuric acids in the firebox, creating corrosion.

Creosote - Formation and Need for Removal. When wood is burned slowly, it produces tar and other organic vapors, which combine with expelled moisture to form creosote. The creosote vapors condense in the relatively cool chimney flue of a slow-burning fire. As a result, creosote residue accumulates on the flue lining. When ignited this creosote makes an extremely hot fire.

NOTE: If the outdoor furnace is operated correctly, creosote will not form in the chimney.

The chimney connector and chimney should be inspected at least twice monthly during the heating season to determine if a creosote buildup has occurred, and to check for corrosion or condensation. If creosote has accumulated it should be removed to reduce the risk of a chimney fire.

⚠ WARNING

The chimney and chimney connector must be clean and in good condition.

MAINTENANCE SECTIONS

Refer to the Preventive Maintenance Schedule for the recommended intervals with which to perform these maintenance items.

Section 1 - Water Level

Open the sight gauge valve. The sight gauge tube will fill to indicate the level of water in the outdoor furnace. Be sure to close the sight gauge valve after checking water level. The sight gauge valve and tube will drain when the valve is closed.

Section 2 - Vent Cap

Check that the vent cap fits loosely on the vent opening. Check the vent cap copper tube for obstruction; clean with a pipe cleaner if needed.

⚠ WARNING

The outdoor furnace vent cap must fit loosely on the vent opening. Do not force the cap down or try to seal it tightly onto the vent pipe. Do not extend or restrict the vent pipe or opening. DO NOT ALLOW THE OUTDOOR FURNACE TO BE PRESSURIZED.

Section 3 - Ash

Refer to the Adding Wood section.

Section 4 - Firebox Door Seal and Bushings

Make sure the firebox door is properly latched and check the condition of the firebox door seal. If it is not sealing properly (indicated by a uniform indentation), replace the seal. If it is not sealing properly after replacing the seal, the firebox door may need to be adjusted. See Firebox Door Hinge/Latch Bearing Adjustment in Serviceable Items section.

Section 5 - Chimney Tee and Chimney

Remove the band clamp and chimney inspection cover. Inspect the chimney outlet and chimney for excessive creosote, ash or deposits and clean as necessary.

NOTE: The chimney inspection cover must fit tightly. Check and clean if necessary the groove for the cover to prevent air from leaking out. Leaking air caused by an improperly fitting cover can cause corrosion.

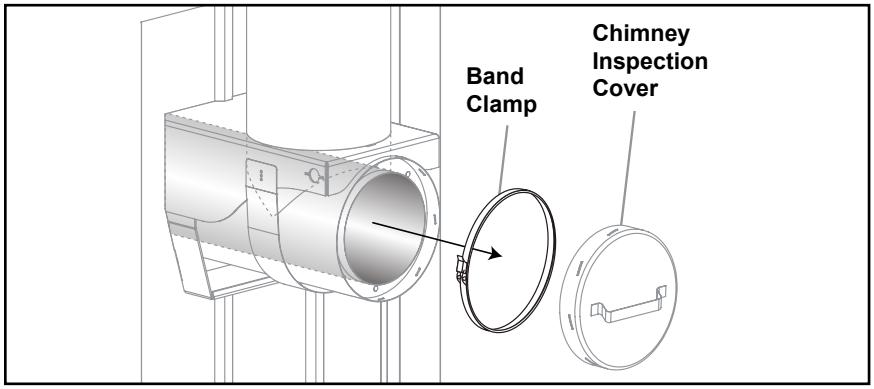

Section 6 - Heat Exchangers

NOTE: Inspect the heat exchangers weekly, and clean as needed, until the interval for your application can be determined. Frequency will vary depending on a number of factors including heat load requirements, type of wood used and the moisture content of the wood.

NOTE: The best time to clean the heat exchangers is prior to loading with wood when all that remains in the firebox is a glowing coal bed.

1. Press the **Power** ⏻ button on the FireStar combustion controller to turn it off.

⚠ CAUTION

Be sure to turn off the FireStar combustion controller before doing this procedure.

2. Remove the chimney inspection cover. Inspect the area above the heat exchangers for any excessive ash buildup. Clean and remove any excessive ash accumulation.

3. Remove the heat exchanger access cover from the back of the furnace. Inspect the cover insulation and repair/replace as necessary.

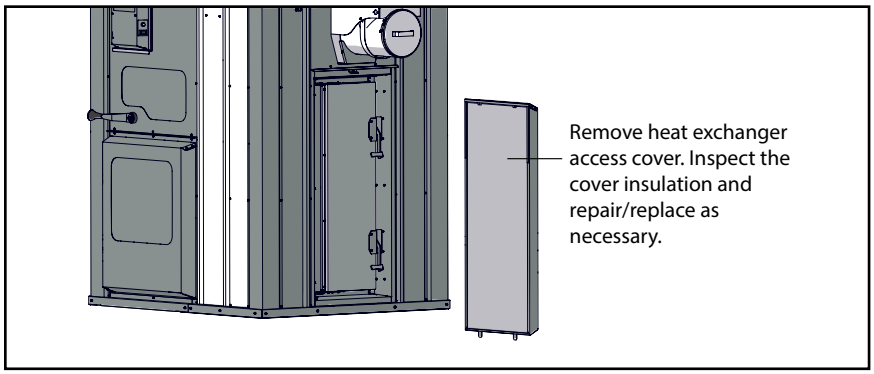

4. Carefully undo both latches on the hinged heat exchanger door. If any coals or wood remain in the firebox, slowly open the door making sure to stand off to the side when opening it.

⚠ CAUTION

Open the heat exchanger door slowly and stand off to the side when opening it.

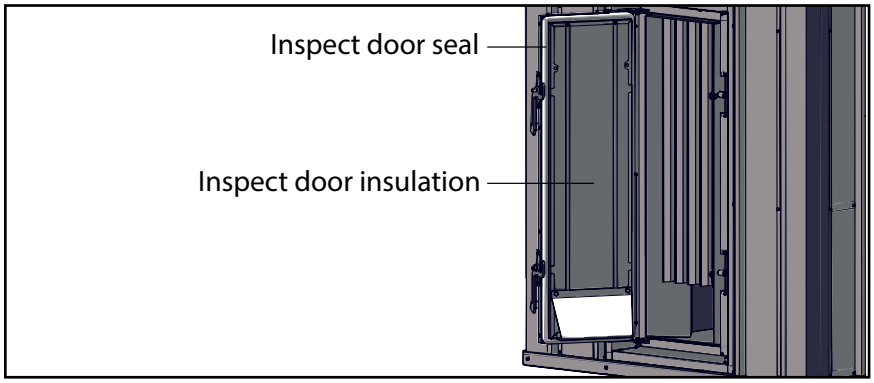

5. Inspect the door insulation and door seal. Repair/replace any defective seal or insulation.

6. Inspect the door frame edge for any buildup of creosote or ash. Use the maintenance tool to clean the door edges.

⚠ CAUTION

Always wear the appropriate personal protective gear when cleaning ash from the turbulators and the Reaction Chamber.

7. Remove each turbulator by gently pulling down and out. Clean each turbulator to remove any ash or buildup; then inspect for damage.

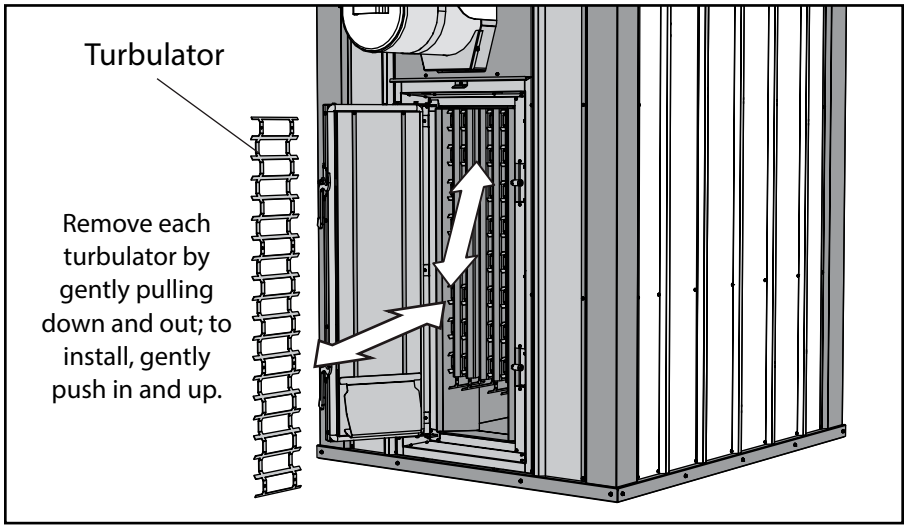

8. Inspect the heat exchangers for excessive buildup of creosote or ash. Use the scraping end of the maintenance tool to clean any accumulations from the sides of the heat exchanger sections. Angle the cleaning rod up to clean from the top of the exchangers and then down to the bottom between each folder of the exchanger.

NOTE: If there is creosote buildup in the heat exchanger, it is caused by operating the furnace incorrectly. It is important to follow the recommended operation and maintenance procedures (see Operating Instructions).

The Flue Brush Kit (p/n 390) is an excellent option as an additional way to clean the exchangers.

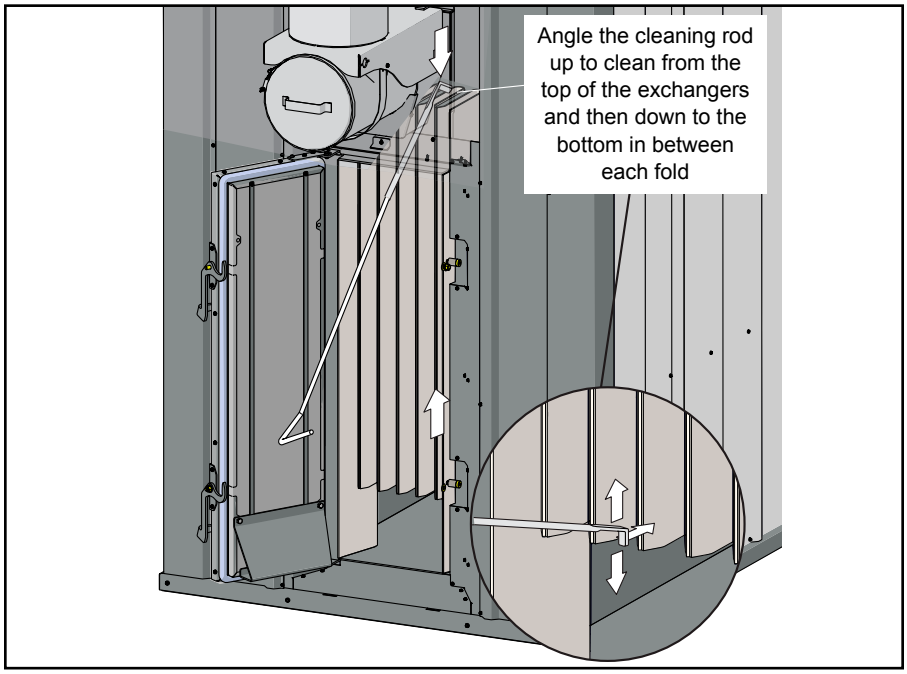

9. Using the maintenance tool and a shovel, clean any accumulated ash from beneath the heat exchanger. Dispose of ash properly.
10. Ensure that the door seal and frame are still clean of any debris or ash; then install each turbulator by gently pushing in and up.
11. Close and latch the heat exchanger door; then install the heat exchanger access cover and chimney inspection cover.
12. Press the **Power** ⏻ button on the FireStar combustion controller to turn it on.

Section 7 - Reaction Chamber

1. Press the **Power** ⏻ button on the FireStar combustion controller to turn it off.

⚠ CAUTION

Be sure to turn off the FireStar combustion controller before doing this procedure.

2. Unlatch and open the Reaction Chamber door.
3. Use the maintenance tool to pull the ash to the front of the furnace. Take care when pulling ash from each side of the Fusion Combustor not to move the refractory sections.
4. Use a small shovel to remove all of the ash and deposits from the Reaction Chamber. Take care not to damage the temperature sensor. You can also clean ash from the back of the furnace by opening the heat exchanger door.

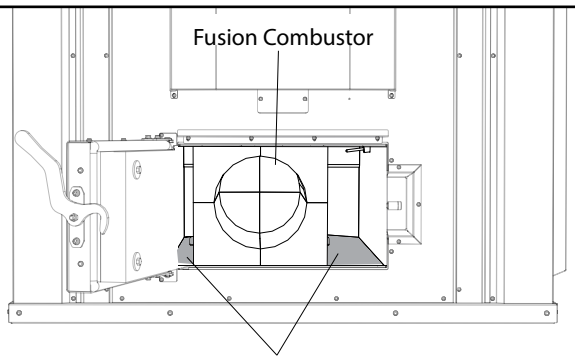

Carefully pull ash to the front of the Reaction Chamber on each side of the Fusion Combustor using the maintenance tool; then remove with small shovel.

NOTE: It is extremely important to clean ash from the entire Reaction Chamber area. If necessary, refer to section Heat Exchangers section for the procedure for removing ash from heat exchanger area.

⚠ CAUTION

Take care not to damage the temperature sensor when removing ash.

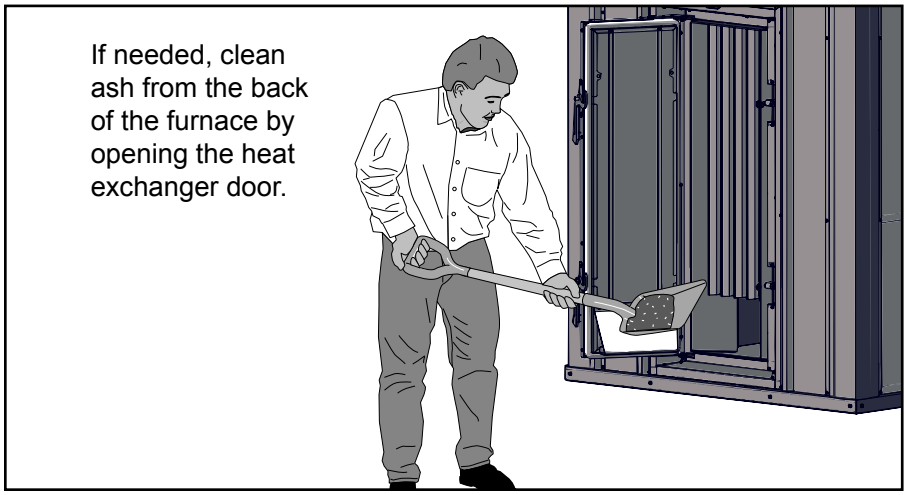

5. Close the Reaction Chamber door and secure the latch.
6. Press the **Power** ⏻ button on the FireStar combustion controller to turn it on.

Section 8 - Firebox

⚠ WARNING

Remove all wood, coals and ash from the firebox.

1. Scrape the top and sides of the firebox and around the door frame area to remove any deposits; then inspect the surfaces of the firebox for any signs of corrosion, paying particular attention to the ash level and below.

NOTE: When scraping to clean inside the firebox, be sure to pay particular attention to the corners and to the seams.

2. If signs of corrosion are present, contact your dealer. Refer to the section Corrosion is Present in the Troubleshooting section.
3. A thin, tar-like creosote layer may form on the firebox walls and migrate toward the bottom of the firebox where it could collect into a thicker layer. Normally this layer will burn up as it collects on the bottom. If it migrates to the bottom of the firebox and does not burn up, it must be removed. Do not allow it to cover or restrict air flow through the combustion air inlets or bottom of the firebox. If larger, thick, dry deposits form on the walls in the firebox, they should be removed with the maintenance tool.

NOTE: Be aware that the hotter the fire, the less creosote is deposited, so weekly cleaning may be necessary in mild weather, even though monthly cleaning may be enough in coldest months.

Section 9 - Combustion Air Tubes

NOTE: If the combustion air tubes are becoming restricted by ash or creosote, it is caused by operating the furnace incorrectly. It is important to follow the recommended operation and maintenance procedures (see Adding Wood section).

Primary combustion air is supplied to the firebox through the combustion air inlets located in the front air channel and in the side combustion air tubes. Be sure to clean off any buildup around the combustion air tube holes and buildup that may collect around the combustion air tubes themselves.

The side combustion air tubes can be removed if necessary. To remove, lift the end of the tube closest to the back of the firebox up off of the retaining pin, then in and toward the back of the firebox. Install by reversing this procedure.

NOTE: If there is a large amount of buildup on the exterior of the combustion air tube, it may be necessary to first remove the buildup to make removal easier.

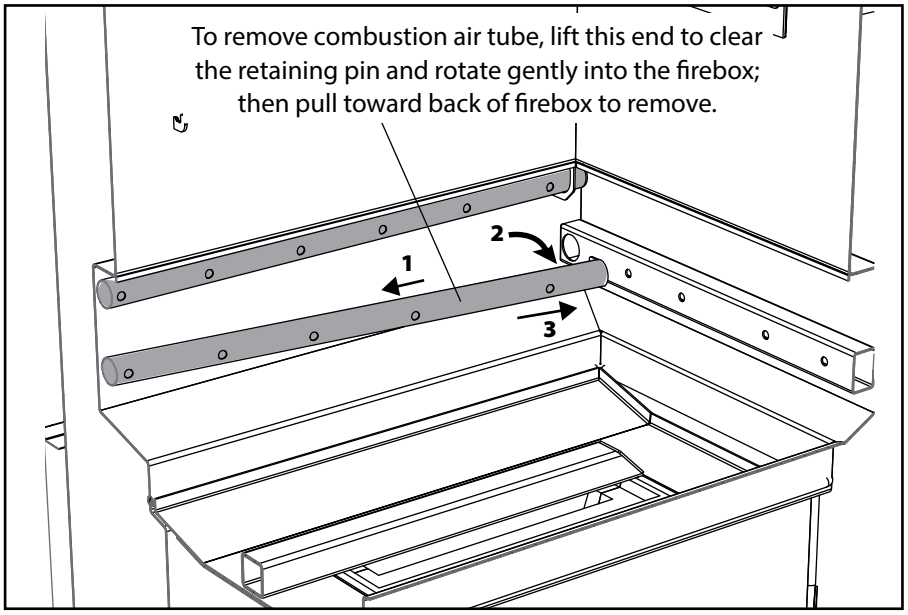

Section 10 - Combustion Air Fan

1. Disconnect power to the outdoor furnace.

⚠ WARNING

Do not proceed without testing that power is disconnected.

2. Remove the airbox access cover; then open the hinged airbox door. Inspect the combustion air fan inlet screen and fan wheel and clean if necessary. Make sure the air intake is clean and not obstructed.

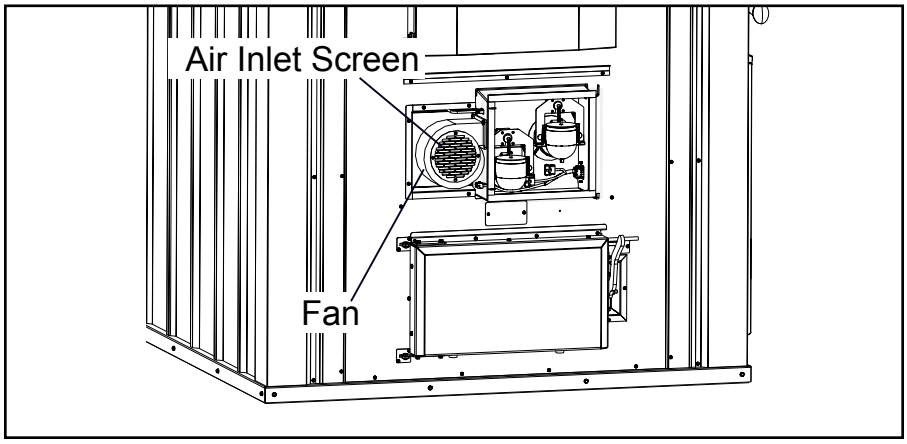

3. Close and secure the airbox door. Install the airbox access cover.

⚠ DANGER

Do not connect power or operate the outdoor furnace with the airbox access cover removed. The outer airbox cover must be installed and secured with screws.

Section 11 - Air Charge Tube and Refractory

Removing and inspecting the air charge tube and inspecting the refractory is best done after the outdoor furnace has been shut down and the firebox has been cleaned according to the Complete Firebox Cleaning Procedures.

NOTE: The air charge tube and refractory are wear items.

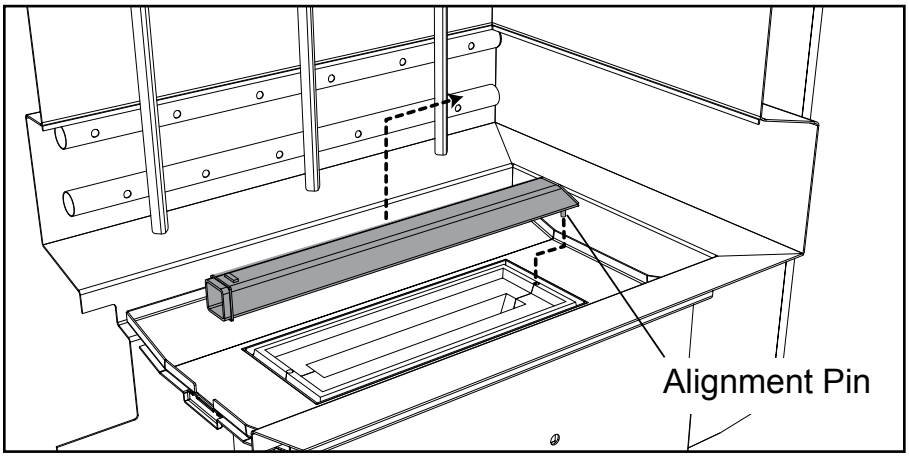

1. Remove the air charge tube by lifting and then sliding it toward the rear of the outdoor furnace. Inspect the mixing channel to see the area is not plugged.
2. Inspect each refractory module for damage. Small cracks and chips in the refractory are normal. If large pieces of the refractory modules are missing, contact your Central Boiler dealer.
3. Install the air charge tube making sure the alignment pin is seated in the alignment hole in the refractory modules.

Section 12 - Primary Air Elbow

1. Disconnect the electrical power to the outdoor furnace at the main power source.

⚠ WARNING

Do not proceed without testing that power is disconnected. Make sure the power cannot be reconnected while servicing the actuator motors (i.e., use lock out, tag out).

2. Remove the outer airbox cover; then open the airbox door.
3. Disconnect the actuator motor wiring harness.
4. Loosen the hose clamp securing the primary air elbow to the air tube; then remove the assembly from the airbox.

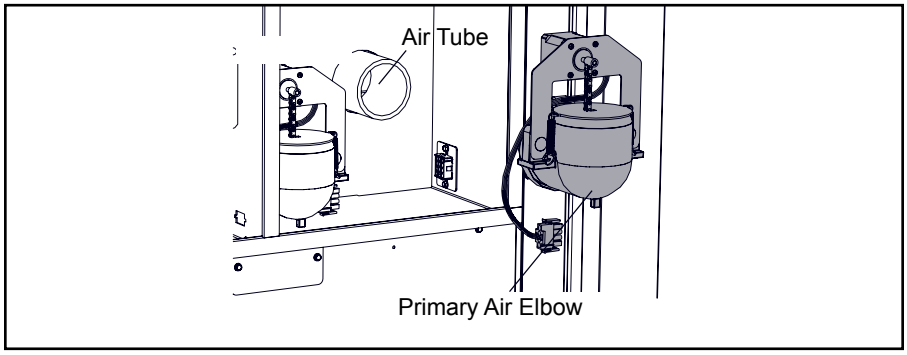

5. Inspect the elbow and clean out any build-up or blockage.

NOTE: A *small* amount of material in the elbow is normal and is not an indication of improper operation.

NOTE: If there is creosote buildup in the primary air elbow, it is caused by operating the furnace incorrectly. It is important to follow the recommended operation and maintenance procedures (see Adding Wood section).

6. Inspect the air tube for blockage or obstructions. To remove blockage or obstructions in the air tube, a screwdriver and a shop vac may be useful.
7. Install the primary air elbow over the air tube; then tighten the hose clamp.
8. Connect the actuator motor wiring harness.
9. Close and secure the airbox door. Install the outer airbox cover and secure with screws.

⚠ DANGER

Do not connect power or operate the outdoor furnace with the outer airbox cover removed. The outer airbox cover must be installed and secured with screws.

10. Connect the electrical power to the outdoor furnace at the main power source.

Section 13 - Bypass Handle (if applicable)

1. Using the grease zerk on the bypass handle, add grease.

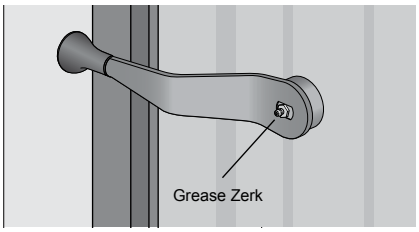

2. Lift and lower the bypass handle several times to distribute the grease.

Section 14 - Complete Cleaning Procedures

The frequency for performing a complete cleaning will vary depending on a number of factors, including your heat load requirements, type of wood used, and the moisture of the wood.

NOTE: Proper maintenance of the firebox, Reaction Chamber, heat exchanger, chimney transition box and chimney tee are essential for the outdoor furnace to function properly and for longevity.

NOTE: It may be best to allow the wood and coals to burn out completely before this type of cleaning.

⚠ CAUTION

Always wear the appropriate personal protective gear (e.g., protective gloves, clothes, dust mask, etc.) when cleaning ash from the firebox and the Reaction Chamber, etc.

⚠ CAUTION

Clear the entire area surrounding the outdoor furnace of any combustible materials before performing these cleaning procedures.

⚠ WARNING

Be careful not to spill any coals or ash. Place coals and ash in a metal container with a tight-fitting metal lid.

NOTE: Refer to the illustration and clean the areas identified in the order shown. For each area in the illustration, refer to the corresponding maintenance section.

1. Press the **Power** ⏻ button to turn the FireStar combustion controller off.

⚠ CAUTION

Be sure to turn off the FireStar combustion controller before doing this procedure.

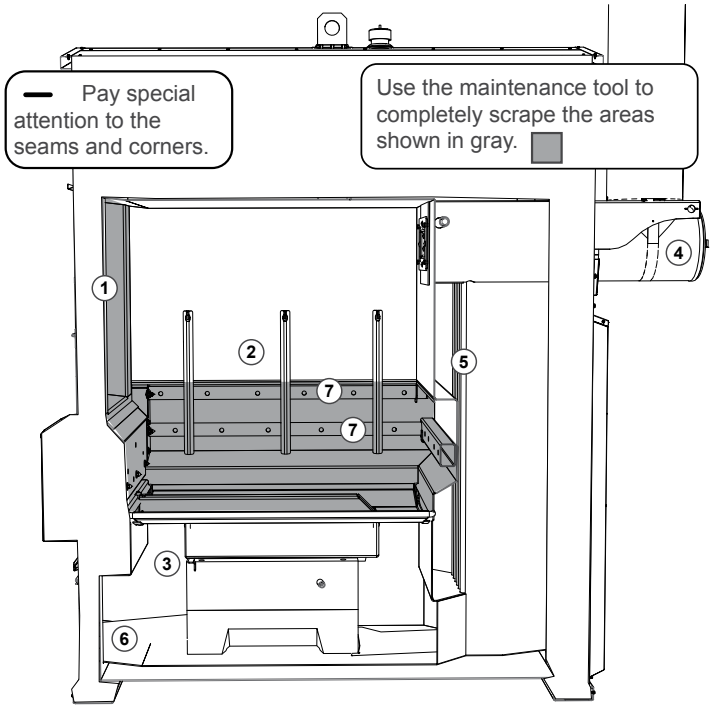

Clean ash and deposits from the areas identified in the order shown. Refer to the corresponding maintenance sections for detailed procedures.

(1) Door Frame (2) Firebox (3) Reaction Chamber (4) Chimney Tee
(5) Heat Exchangers (6) Reaction Chamber
(7) Combustion Air Outlets

Door Frame

Open the firebox door; then scrape the face and surface area of the door frame to remove any deposits.

Firebox

See Maintenance Section 8 - Firebox.

Chimney Tee

See Maintenance Section 3 - Chimney Tee.

Heat Exchangers

See Maintenance Section 6 - Heat Exchangers.

Reaction Chamber

See Maintenance Section 7 - Reaction Chamber.

Combustion Air Tubes / Air Charge Tube

See Maintenance Section 9 - Combustion Air Tubes and Maintenance Section 11 - Air Charge Tube and Refractory.

SERVICEABLE ITEMS

NOTE: These procedures should be performed by a qualified individual and in accordance with any and all federal, state/provincial and local codes and regulations. When performing work on an appliance observe all precautions in the literature, tags and labels attached to the appliance and other safety precautions that may apply. When working with electricity and electrical components, failure to follow precautions could result in property damage, personal injury or death.

NOTE: If any of these items are under warranty, remember that the warranty covers only the cost of the replacement part. Labor is not covered.

NOTE: Use only genuine Central Boiler parts and accessories if it ever becomes necessary to replace any component on the outdoor furnace.

FIREBOX DOOR HINGE / LATCH BEARING ADJUSTMENT

If the firebox door seal has been replaced and it is not sealing properly, the firebox door may need to be adjusted to close more tightly. When adjusting the firebox door, make sure it is not adjusted too tightly as damage to the firebox door, frame or door seal may result.

1. To tighten the hinges, loosen the inner adjustment nut and turn the outer nut in slightly; then tighten the inner adjustment nut securely. Adjust the top and bottom hinge for equal pressure when the door is latched.

2. To tighten the latch bearing, loosen the latch adjustment nut; then tap the latch bearing assembly in toward the firebox. Tighten the latch adjustment nut securely.

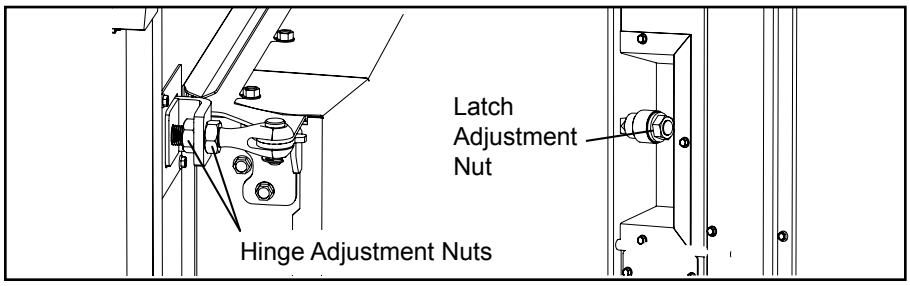

FIREBOX DOOR SEAL

The firebox door seal must be in good condition to ensure an airtight seal. If the outdoor furnace is operated with the door open or ajar, the firebox door seal may become damaged or brittle due to excessive temperatures. If replacement is necessary, use the following procedure:

⚠ WARNING

Remove all wood, coals and ash from the firebox.

1. Disconnect power to the outdoor furnace.

⚠ WARNING

Do not proceed without testing that power is disconnected. Make sure the power cannot be reconnected while testing components (i.e., use lock out, tag out).

2. Using a scraper, remove the firebox door seal on the inner side of the firebox door and clean any remaining silicone adhesive from the groove. Any residue left in the groove will interfere with the new door seal.

3. Apply a liberal amount of silicone sealant into the entire firebox door seal groove.

4. Starting at the center of the hinge side of the firebox door, insert the new door seal into the groove, pressing it firmly into the bead of silicone sealant. Make sure the seal is not stretched as it is pressed into the corners. Force the seal out to fill in the corners as shown.

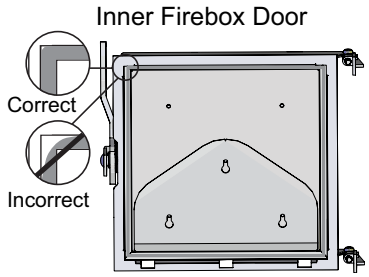

5. Scrape the face and surface area of the door frame to remove any deposits.

6. Close the firebox door. Make sure that pressure is felt as the latch is closed to ensure the seal is tight with the door frame.

7. Open the firebox door and check that there is an impression in the seal from the door frame. This mark must extend, with no gaps, around the entire perimeter of the firebox door seal. If needed, adjust the hinges and latch assembly.

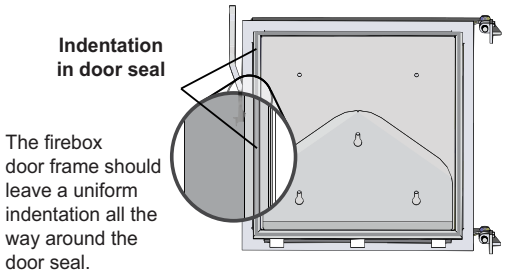

⚠ CAUTION

The firebox door seal will be damaged or destroyed if it is not installed properly.

REACTION CHAMBER DOOR SEAL

The Reaction Chamber door seal must be in good condition to ensure an airtight seal. If replacement is necessary due to the Reaction Chamber door seal becoming damaged or brittle, use the following procedure:

1. Disconnect power to the furnace.
2. Unlatch and open the Reaction Chamber door.
3. Use the maintenance tool to pull the ash to the front of the furnace; then use a small shovel to remove all of the ash and deposits from the Reaction Chamber. Take care not to damage the temperature sensor.

⚠ WARNING

Remove all ash from the Reaction Chamber.

4. Using a scraper, remove the Reaction Chamber door seal rope and clean any remaining silicone adhesive from the groove. Any residue left in the groove will interfere with the new seal.
5. Apply a liberal amount of silicone sealant into the entire Reaction Chamber door seal groove.
6. Starting at the center of the hinge side of the Reaction Chamber door, insert the new door seal rope into the groove, pressing it firmly into the bead of silicone sealant. Make sure the Reaction Chamber door seal rope is not stretched as it is pressed into the corners. Force the Reaction Chamber door seal rope out to fill in the corners as shown.

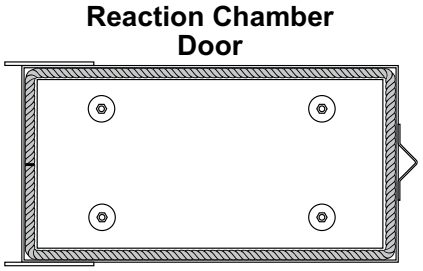

7. When the seal has been pressed into the groove all the way around the Reaction Chamber door, cut the end of the rope about one inch longer than required and press it tightly against the beginning end of the rope.
8. Close the Reaction Chamber door and secure the latch.

HEAT EXCHANGER DOOR SEAL

Heat Exchanger Door Seal Rope

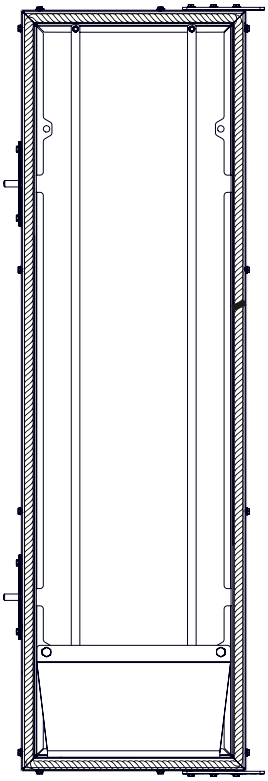

The heat exchanger door seal must be in good condition to ensure an airtight seal. If replacement is necessary due to the door seal becoming damaged or brittle, use the following procedure:

1. Press the **Power** ⏻ button on the FireStar combustion controller to turn it off.

⚠ CAUTION

Be sure to turn off the FireStar combustion controller before doing this procedure.

2. Remove the heat exchanger access cover from the back of the furnace.
3. Carefully undo both latches on the heat exchanger door; then slowly open the door making sure to stand clear of the opening.

⚠ CAUTION

Open the heat exchanger door slowly and stand off to the side when opening it.

4. Using a scraper, remove the heat exchanger door seal rope and clean any remaining silicone adhesive from the groove. Any residue left in the groove will interfere with the new seal.
5. Apply a liberal amount of silicone sealant into the entire heat exchanger door seal groove.
6. Starting at the center of the hinge side of the heat exchanger door, insert the new door seal rope into the groove, pressing it firmly into the bead of silicone sealant. Make sure the door seal rope is not stretched as it is pressed into the corners. Force the door seal rope out to fill in the corners as shown.
7. When the seal has been pressed into the groove all the way around the heat exchanger door, cut the end of the rope about one inch longer than required and press it tightly against the beginning end of the rope.
8. Close the heat exchanger door and secure with latches. Install and secure the heat exchanger access cover.

CIRCUIT BREAKER

The circuit breaker is located in the pump access area and also serves as the furnace disconnect. If the circuit breaker trips (turns off), reset it by turning it on. If the circuit breaker continues to trip, a component may be faulty. It is possible to isolate a faulty component using the following procedure.

1. Disconnect power to the outdoor furnace.

⚠ WARNING

Do not proceed without testing that power is disconnected. Make sure the power cannot be reconnected while testing components (i.e., use lock out, tag out).

2. Remove the airbox access cover; then open the airbox door.
3. Disconnect the actuator motor harness and disconnect the fan harness.
4. To test for a faulty component, connect one component at a time (e.g., start with one of the actuator motors); then connect power to the outdoor furnace. If the circuit breaker trips, the component is likely faulty. If not, disconnect power to the outdoor furnace and repeat the procedure until all components have been tested.

⚠ CAUTION

Disconnect power to the outdoor furnace before disconnecting a component and before connecting a component.

5. Close and secure the airbox door. Install the airbox access cover.

⚠ DANGER

Do not connect power or operate the outdoor furnace with the outer airbox cover removed. The outer airbox cover must be installed and secured with screws.

AIRBOX SEAL

Replace the airbox seal if it becomes damaged or worn to maintain proper operation of the furnace. See your Central Boiler dealer for replacement seals.

NOTE: It is best to replace the entire seal. Over time, the seal will compress, and replacing it in sections may result in the old sections not sealing completely against the airbox door.

1. Disconnect power to the outdoor furnace.

⚠ WARNING

Do not proceed without testing that power is disconnected. Make sure the power cannot be reconnected while replacing the airbox seal.

2. Remove the airbox access cover; then open the airbox door. Using a scraper or similar tool, scrape off the existing seal from the airbox.
3. Clean off any remaining adhesive residue with alcohol or a suitable solvent.
4. Measure and cut replacement seal.

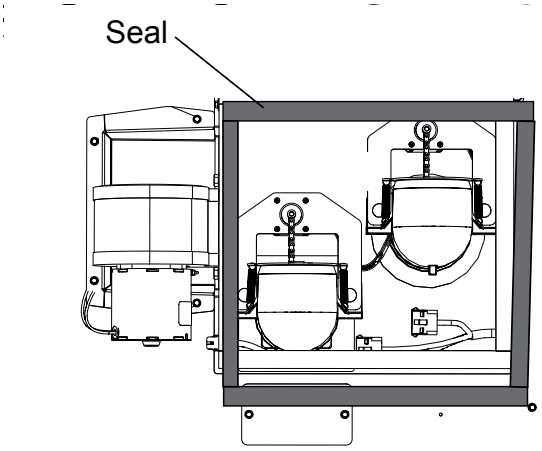

5. Remove the adhesive backing from the replacement seal and carefully apply the seal to the airbox as shown, making sure there are no gaps.
6. Close the airbox door and turn the furnace back on.
7. After the fan has started, use your hand to feel around the edges of the airbox door to check for leaks. A little air leakage, especially around the latches, is normal. If an excessive amount of air is felt, turn off the furnace; then check and repair/replace the seal if necessary.
8. Install the airbox access cover.

AIR CHARGE TUBE AND REFRACTORY MODULES

⚠ WARNING

Remove all wood, coals and ash from the firebox and allow the firebox to cool thoroughly before replacing the air charge tube and/or refractory.

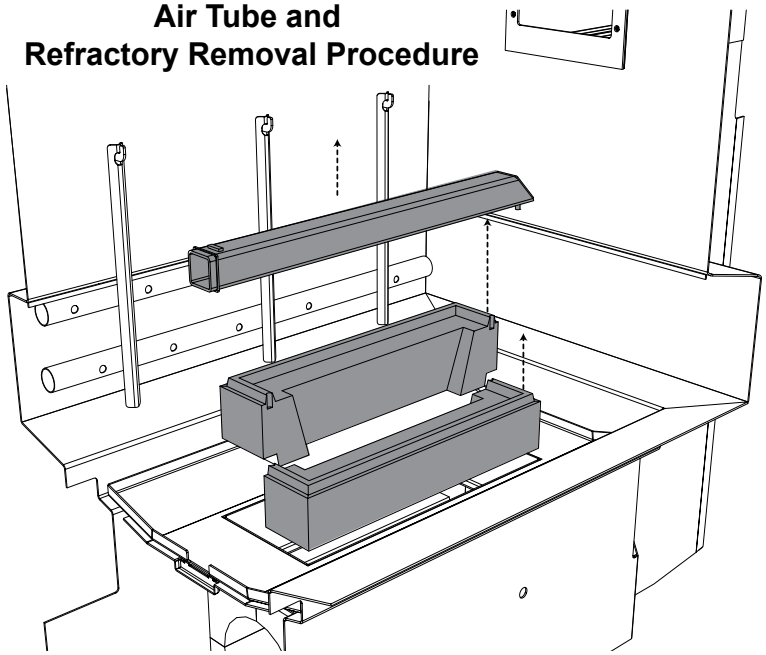

1. Remove the air charge tube by lifting it up and sliding it toward the back of the outdoor furnace.
2. Remove the rope gasket; then remove the existing refractory modules.
3. Ensure the area where the new refractory modules will be installed is clean and free of all debris. Install the new refractory modules; then install a new rope gasket on top of the refractory modules.
4. Install the new air charge tube by placing it in the opening at the front of the outdoor furnace as shown; then pull it toward the front of the outdoor furnace to secure it in place making sure the alignment pin fits into the alignment hole in the refractory modules.

THERMOCOUPLE

1. Disconnect power to the outdoor furnace.

⚠ WARNING

Do not proceed without testing that power is disconnected. Make sure the power cannot be reconnected while replacing the thermocouple.

2. Remove the pump access cover.
3. Disconnect the thermocouple connector; then remove the mastic tape from the thermocouple.
4. Remove the thermocouple.
5. Install the new thermocouple until the stop collar contacts the thermocouple tube.

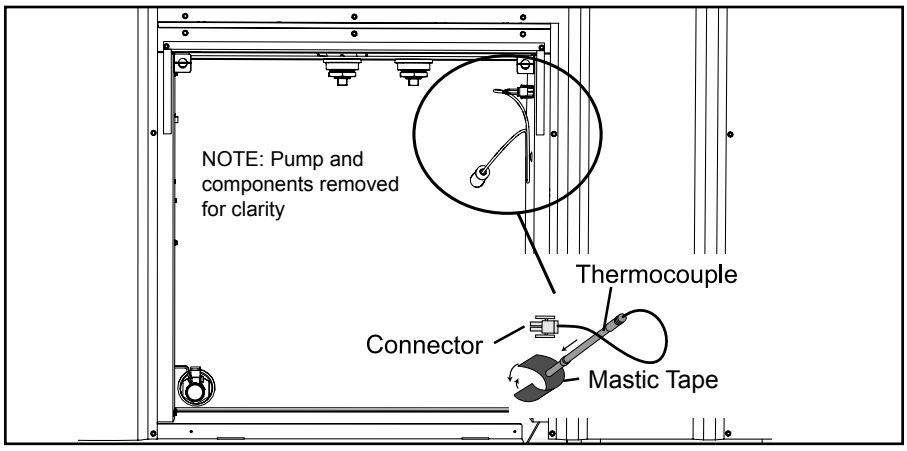

6. Secure the thermocouple with the mastic tape; then connect the thermocouple connector.
7. Install the pump access cover; then connect power to the furnace.

HEAT EXCHANGER DOOR INSULATION

NOTE: Insulation for the heat exchanger door is not standard fiberglass insulation. Use only the correct insulation when replacing or damage could occur. Contact your Central Boiler dealer for replacement insulation.

1. Press the **Power** ⏻ button on the FireStar combustion controller to turn it off.
2. Remove all wood, coals and ash from the firebox and allow the firebox to cool thoroughly.

⚠ WARNING

Remove all wood, coals and ash from the firebox and allow the firebox to cool thoroughly before replacing the heat exchanger door insulation.

3. Remove the heat exchanger access cover from the back of the furnace.
4. Carefully undo both latches on the heat exchanger door; then slowly open the door making sure to stand clear of the opening.

⚠ CAUTION

Open the heat exchanger door slowly and stand off to the side when opening it.

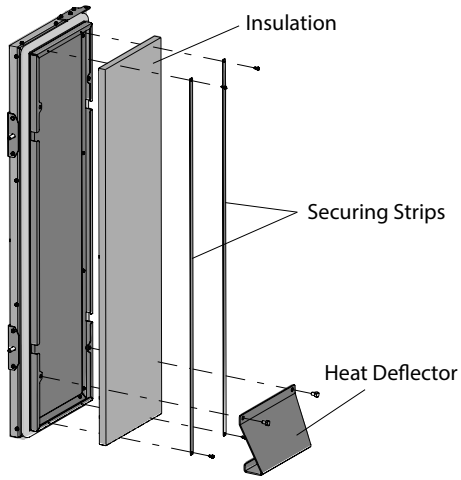

5. Swing the door open far enough to gain access to the inside of the door.
6. Wearing proper protective gear, use a brush or small broom to clean off any accumulated ash from the inside of the door.

7. Remove the heat deflector from the bottom of the door.
8. Remove the hardware and securing strips.
9. Carefully remove the insulation paying close attention to how the insulation is installed in the door and tucked into the edges of the door. This will aid in installation of the new insulation.
10. Before installing the new insulation, place it over the opening to make sure it is the correct size.
11. Place the new insulation inside the heat exchanger door with the reflective side facing out (toward you). Be careful not to tear the reflective material. Ensure that the edges of the new insulation are tucked into the edges of the door.
12. Install the securing strips. It may be necessary to adjust the insulation being careful not to tear it, after the securing strips are installed.
13. Install the heat deflector.
14. Check the insulation again to ensure that it is properly secured and attached to the inside of the heat exchanger door.
15. Carefully close and latch the heat exchanger door.

NOTE: The first few times the heat exchanger door is opened and closed after installing new insulation, it could seem more difficult to secure the latches. This is normal and once the insulation settles, securing the latches will be easier.

16. Install the heat exchanger access cover.

HEAT EXCHANGER ACCESS COVER INSULATION

NOTE: Be sure to check the temperature range for the spray adhesive. It may be necessary to replace the heat exchanger access cover insulation indoors to allow it to cure properly.

1. Remove the heat exchanger access cover from the back of the furnace.
2. Lay the cover on a piece of cardboard on a flat surface; then, wearing proper protective equipment, use a scraper to remove the insulation and any adhesive from the cover.
3. Test fit the new piece of insulation.
4. Using a good quality spray adhesive, follow the instructions on the can and apply the necessary amount to the inside of the cover.
5. Install the insulation in the cover, pressing down in multiple spots to ensure complete contact with the adhesive. Make sure the insulation is tucked all the way into the top of the cover.

6. Leave the cover on the flat surface until the adhesive cures according the adhesive manufacturer's instructions.

7. After the adhesive has cured, check to ensure the insulation has properly bonded to the cover; then install the heat exchanger access cover on the furnace.

COMBUSTION AIR TUBE / FRONT AIR CHANNEL

Press the **Power** ⏻ button on the FireStar combustion controller to turn it off.

⚠ CAUTION

Be sure to turn off the FireStar combustion controller before doing this procedure.

⚠ WARNING

Remove all wood, coals and ash from the firebox and allow the firebox to cool thoroughly before working inside the firebox.

Combustion Air Tube

1. Lift the end of the tube closest to the back of the firebox up off of the retaining pin, then in and toward the back of the firebox. Install by reversing this procedure.

NOTE: If there is a large amount of buildup on the exterior of the combustion air tube, it may be necessary to first remove the buildup to make removal easier.

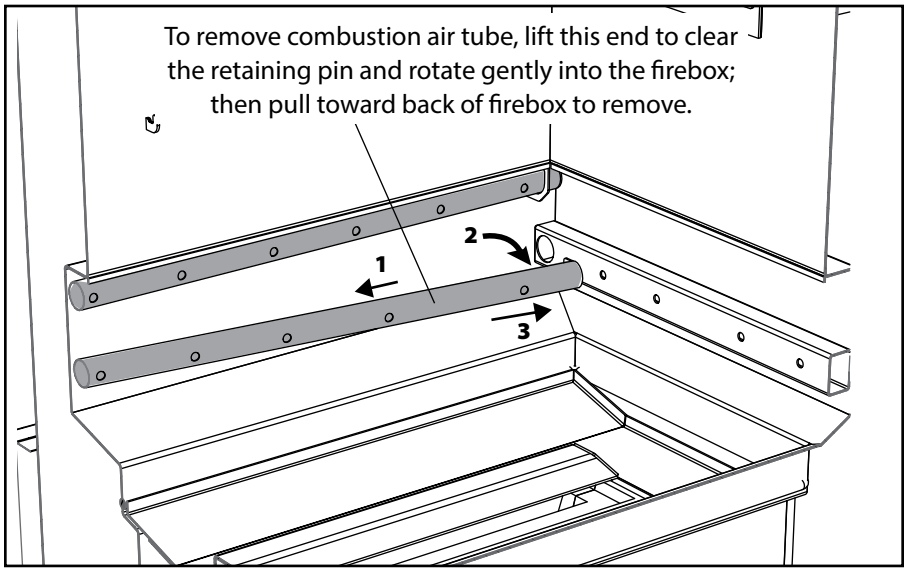

Front Air Channel

1. Remove the acorn nuts securing the front air channel and remove. Remove any ash or deposits from behind the air channel in the wall of the firebox.

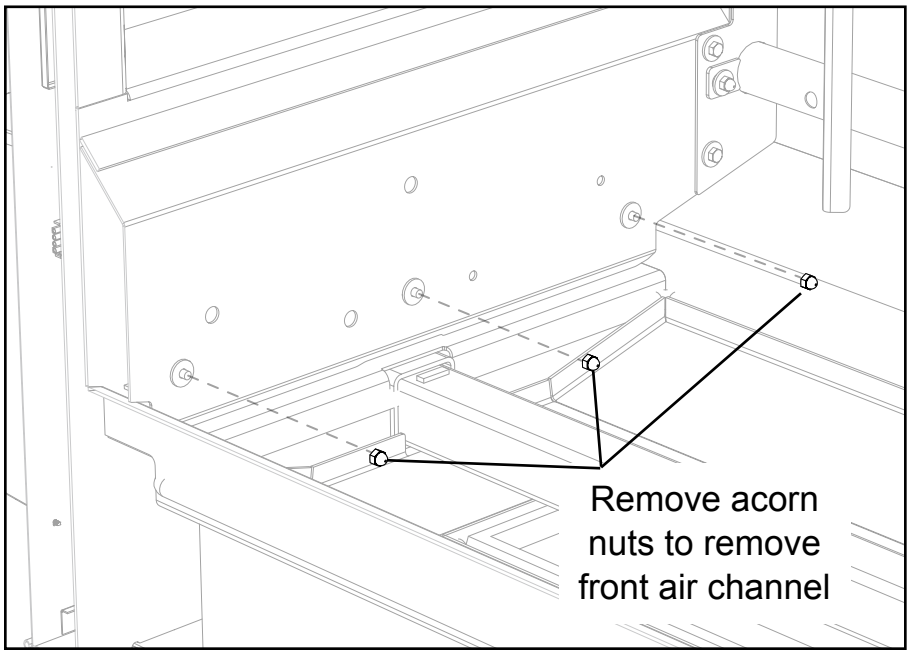

2. Install the new air channel. Apply a high-temperature, anti-seize compound to the stud threads; then secure with the acorn nuts and tighten securely.

TROUBLESHOOTING

GENERAL TROUBLESHOOTING INFORMATION

If the outdoor furnace is not operating the way it should, first review the information found in the Operation Instructions section, particularly the Adding Wood section.

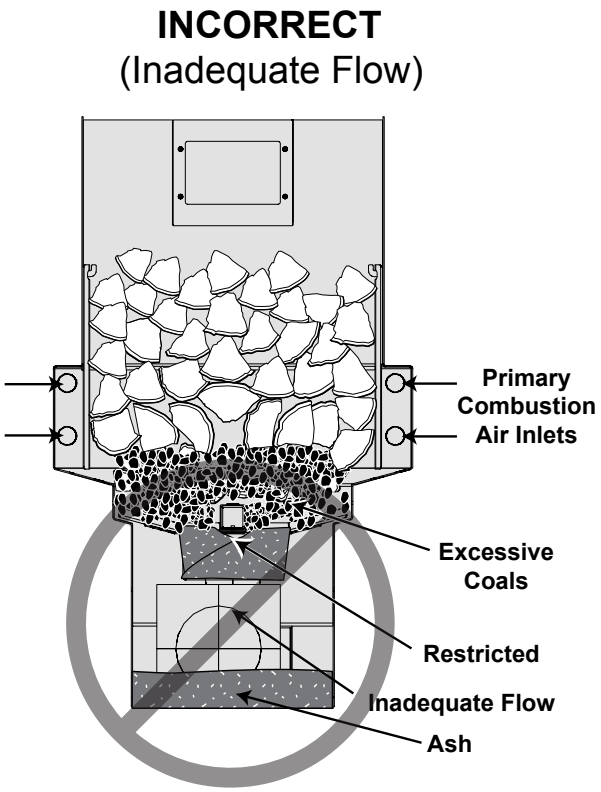

Is the Reaction Chamber full of ash?

The Reaction Chamber is where final combustion occurs. It is important that the Reaction Chamber remain unobstructed to allow final combustion to occur. It is not designed to be an ash collection area, although over time ash will gradually accumulate in the Reaction Chamber.

If ash builds up in the Reaction Chamber to a level that obstructs flow, the performance of the outdoor furnace will be affected, so the ash must be removed. A good rule is to clean the Reaction Chamber before it becomes 1/2 full (approximately 5" or 13 cm deep in any area of the Reaction Chamber).

INCORRECT
(Blocked Flow)

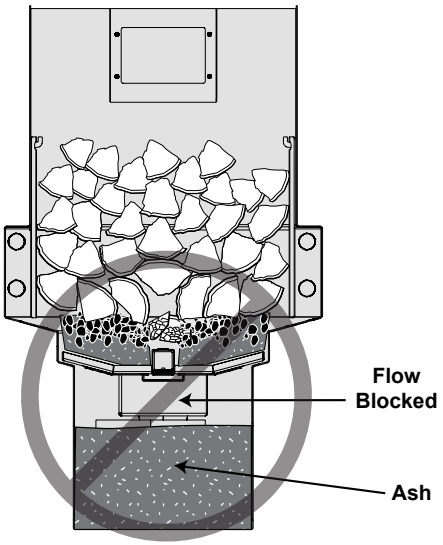

Are the air inlets plugged?

Primary combustion air is provided through the combustion air inlets in the firebox.If the air inlets are restricted or plugged, the furnace will not operate correctly. If it appears the combustion air inlets are plugged or restricted, refer to the Maintenance Sections for the Combustion Air Tubes and Air Charge Tube and Refractory. If after cleaning each combustion air inlet, air flow is still blocked, inspect the primary combustion air elbow. Refer to the Maintenance Section for Primary Air Elbow.

NOTE: If there is creosote buildup in the primary air elbow, it is caused by operating the furnace incorrectly. It is important to follow the recommended operation and maintenance procedures (see Adding Wood section).

Is there creosote and/or ash inside the airbox?

Creosote, ash, or even coals in the airbox is an indication that the outdoor furnace has not been maintained and/or operated properly. Especially important to the operation and efficiency of the outdoor furnace is unrestricted air flow throughout the entire system. Refer to Adding Wood for a detailed explanation of how to operate and maintain your Classic Edge.

One or more combustion air inlets are covered - If the level of coals and ash in the firebox is allowed to accumulate over the combustion air inlets, normal air flow can be blocked and could force coals and ash back into the airbox. Remove enough ash so the combustion air inlets are not covered. Review the Adding Wood section for more information.

TROUBLESHOOTING OTHER SITUATIONS

A. OUTDOOR FURNACE IS NOT OPERATING CORRECTLY

Review the information in the Adding Wood section, starting at step 5.

1. **Out of wood** - Add wood as necessary. Use correctly sized, seasoned wood.
2. **Mixing channel (area directly below the charge tube) or Fusion Combustor obstructed** - Inspect and clean as required.
3. **Combustion air inlets obstructed** - Clean as required to prevent the combustion air inlets from being obstructed.
4. **Combustion air fan obstructed or not running** - Check the screen over the fan inlet and the inside of the fan for any obstructions.
5. **Airbox leaking** - The airbox cover must be properly secured. Determine the cause and correct.
6. **Primary air actuator motor closed** - If the primary air actuator motor is not operating properly, determine the cause and correct.
7. **Reaction Chamber, heat exchanger or the chimney plugged** - If the Reaction Chamber, heat exchanger or chimney are plugged, determine the cause and correct.
8. **Door open** - If the display on the controller indicates Door Open, close the firebox door. Make sure the firebox door is properly latched and check the condition of the firebox door seal. If it is not sealing properly (indicated by a uniform indentation), replace the seal.
9. **Low water** - If the display on the controller indicates Low Water, the system senses a low water condition. Check the water level at the sight gauge and, if necessary, add water according to the Water Quality and Maintenance section. If adding water does not correct the problem, contact your Central Boiler dealer.

NOTE: If water needs to be added, it is very important to identify the cause of water loss and correct immediately. A leaky system or overheating commonly leads to dilution of the corrosion inhibitor and water jacket corrosion.

10. **Low water temperature for too long a period of time** - The display on the controller will indicate Fire Out and the controller will shut down the furnace if the water temperature has been too low for too long. Determine the cause of the water temperature being too low.
11. **Alarm condition** - Refer to the FireStar Combustion Controller Operation Manual.
12. **Chimney not drafting properly** - Draft is the force which moves air from the appliance up through the chimney. The amount of draft in your chimney depends on the length of the chimney, local geography, nearby obstructions and other factors. Draft occurs when the temperature in the chimney is high enough to cause a negative pressure that "pulls" the exhaust up and out the chimney.

    Proper draft is necessary for the Classic Edge to operate optimally. Too much draft may cause excessive temperatures in the appliance. Inadequate draft may cause backpuffing and plugging of the chimney.

    If poor draft is suspected, perform the following test: with the outdoor furnace and chimney at normal operating temperature, loosen the chimney inspection cover and pull it back about an inch. If exhaust comes out from around the cover, pressure in the chimney may be incorrect and adding more chimney sections may be required. However, due to many variables, even if exhaust does not come out from around the cover, the chimney might still not be drafting properly at all times. Due to a number of variables, poor draft can be an intermittent problem.

NOTE: A qualified installer may perform the following test to check for proper draft. Before performing the test, the outdoor furnace should be completely cleaned to ensure nothing obstructs exhaust flow through the system. Fire the furnace and allow it to reach normal operating temperature before performing the test.

- Drill a hole in the chimney inspection cover; then with the outdoor furnace and chimney at normal operating temperature, use a manometer to check draft. If flue draft is less than -0.05 in. WC (-12.45 Pa) add more chimney sections.
- After the test, fill the hole in the chimney inspection cover with high-temp silicone.

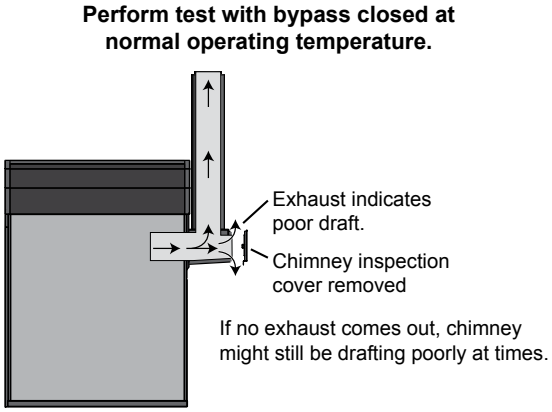

- If a spark arrestor is being used, make sure it is clean and unobstructed.
- Objects like buildings and trees in close proximity or nearby terrain (e.g., hills, valleys, etc.) can adversely affect air flow in the chimney. Adding chimney sections may overcome these factors.

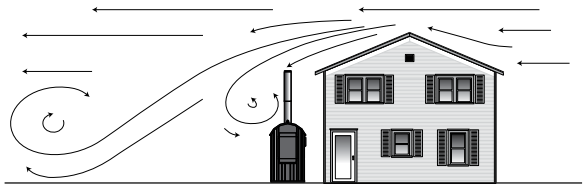
May cause poor draft.

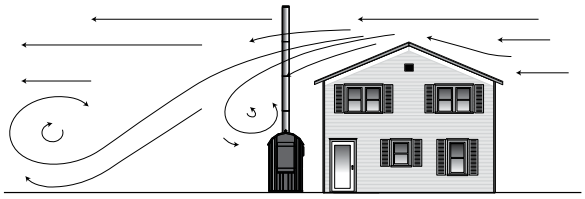
Allows for better draft.

B. FIRE GOES OUT OR KEEPS GOING OUT

Review the information in the Adding Wood section, starting at step 5.

C. BUILDING IS LOSING TEMPERATURE

Review the information in the Adding Wood section, starting at step 5.

1. **Circulation valve(s) closed** - Be sure the proper valves in the system are open to allow circulation.
2. **Circuit breaker off** - If there is a circuit breaker that supplies power to the outdoor furnace, check that it is on.
3. **Circuit breaker off** - Check that the circuit breaker switch (located in the pump compartment) is on. If the circuit breaker has tripped, determine the cause before resetting it.
4. **Circulation pump(s) not operating** - Check that circulation pumps are operating. If not, disconnect power to the pump. Close valves at the pump. Disassemble the pump and try to turn the pump shaft. If the shaft is stuck, replace the pump cartridge. Replace only the cartridge whenever possible. If necessary, replace the pump. Follow instructions supplied with the pump.
5. **Air in system** - Check for air in the water lines or heat exchangers. If you hear a gurgling sound in a heat exchanger, air is present in the system. Shut off the pump, wait 15 seconds and start the pump. If it is necessary to force air from lines, refer to Initial Start-up Procedures.
6. **Building(s) poorly insulated or uninsulated** - Poorly insulated or uninsulated buildings, buildings with uninsulated or poorly insulated ceilings, or a lack of proper insulation under radiant flooring can cause excessive fuel consumption and or heating problems.
7. **Supply and return lines installed incorrectly** - Make sure the hot supply line is connected to the correct fitting on the outdoor furnace and heat exchanger.
8. **Circulation pump(s) installed backwards** - Check that pump flow direction is correct. If not, shut off power to pump. If the flow is not in the correct direction, disconnect pump from water line and reverse pump mounting to correct flow direction. If the pump is not mounted on the outdoor furnace, check for proper pump mounting location.
9. **Underground supply and return lines insulated poorly** - Heat loss from poorly insulated underground supply and return lines is often indicated by an unusually high amount of snow melting above the lines when the ground temperature is 10º F (-12˚C) or colder.
10. **Supply and return lines uninsulated** - Uninsulated supply and return lines in areas that are not intended to be heated (unheated crawl spaces, under mobile homes, etc.) may cause excessive heat loss. Insulate the supply and return lines.
12. **Poor water quality** - Water with high amounts of solids, sand or dirt can create deposits inside the wall of heat exchanger components, reducing the amount of heat output. If this condition is suspected, contact your Central Boiler dealer.
13. **New construction with radiant in-floor heat** - Bringing a cold concrete slab up to temperature the first time will take a considerable amount of time and wood; once warm, wood consumption will be reduced if the concrete slab and building are insulated properly.
14. **Heat load too large** - Re-evaluate the system and match heat load to the outdoor furnace.

D. SMOKE COMING FROM BETWEEN FIREBOX DOOR AND FRONT OF THE DOOR FRAME

1. **Door seal faulty or door frame obstructed** - If there is smoke coming from between the firebox door and the front of the door frame for more than a short time after reloading, scrape the face and surface area of the door frame to remove any deposits. Check the condition of the firebox door seal and replace if necessary.
2. **Door hinges and/or latch need adjusting** - Adjust the hinges and/or latch bearing.

E. OUTDOOR FURNACE IS OVERHEATING

1. **Air entering through the firebox door or smoke coming out of the firebox door when the door is closed** - Make sure the firebox door is properly latched and check the condition of the firebox door seal. If it is not sealing properly (indicated by a uniform indentation), replace the seal. If firebox door does not close tightly, adjust using the appropriate procedure (see Owner Serviceable Items).

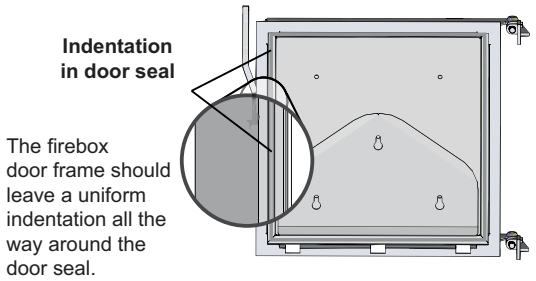

NOTE: If the outdoor furnace is operated with the door open, the firebox door seal may be damaged.

2. **Actuator motor and/or air regulating disc stuck open or obstructed** - Remove any obstructions. Lubricate the chain with a high temperature dry film lubricant rated for chains. Be careful not to get lubricant on the actuator motor or motor shaft. If replacement is necessary, refer to Air Regulating Disc Gaps for the factory settings for the air regulating discs.

NOTE: If the outdoor furnace loses water from boiling, the problem should be identified and repaired immediately. Under normal operation, little or no water needs to be added. Adding water to the furnace may cause corrosion if not immediately treated with MolyArmor 350 to the proper level. In addition, the amount of dissolved solids in the system (due to adding additional water) can cause problems.

3. **Water is not circulating** - Check to make sure the pump is operating and water is circulating continuously through the supply and return lines to keep water temperature uniform in the outdoor furnace.
4. **Circulation valve(s) closed** - Be sure the proper valves in the system are open to allow circulation.
5. **Pulse set to run too long and/or too often in a low heat draw situation** - Increase the time between idle pulses of air and/or decrease the amount of time the pulse is provided (see FireStar operating instructions).
6. **FireStar combustion controller set incorrectly** - Refer to FireStar Combustion Controller Operation Manual.

F. FREQUENT PUMP TROUBLE OR POOR WATER CIRCULATION

1. **Pump mounted incorrectly** - If the pump is not mounted on the outdoor furnace, it must be mounted at a minimum of four feet lower than the top water level in the outdoor furnace.

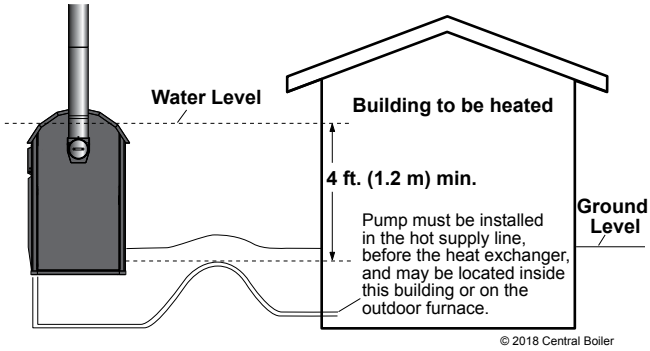

Make sure the pump motor is installed in a horizontal position. The junction box must not be located below the pump motor. If necessary, remove the four screws and rotate the pump body.

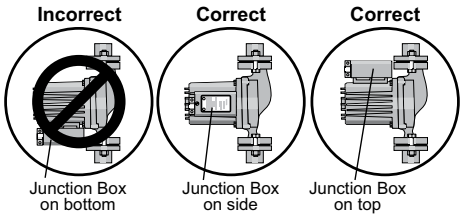

2. **Water will not circulate** - If the system has been drained and refilled, or if the system has been opened for any reason (e.g., replacement of pump, adding heat exchangers, repairing a leak), the system must be purged (see Initial Start-up Procedures).
3. **Poor water quality** - Water with high amounts of solids, sand or dirt can cause frequent pump failure. Use softened and/or filtered water.
4. **Deposits in water lines/heat exchanger walls** - If water high in silica or other mineral content has been used, material deposits may build up on the insides of the supply and return lines and on the heat exchanger walls. If this occurs, the system will need to be drained and then cleaned using Sludge Conditioner (p/n 166). The system must then be refilled with the proper amount of MolyArmor 350 Corrosion Inhibitor (p/n 2900630) and fresh water.

G. BURNING AN EXCESSIVE AMOUNT OF WOOD

1. **High volume water heating** - High volume water heating (e.g., car wash, swimming pool, etc.) will require high wood consumption.
2. **Excessive heat loss** - See items 6-10 of Building is Losing Temperature.
3. **Supply and return line heat loss** - If not using ThermoPEX, supply and return lines buried in a wet, low-lying area may cause a large heat loss that will greatly increase wood consumption.
4. **High heat demand** - Concrete slabs (with radiant heat) that are poorly insulated or are exposed to water or cold outside temperatures will require increased wood consumption (see Hydronic Installations section). Bringing a cold concrete slab up to temperature the first time will take a considerable amount of time and wood; once warm, wood consumption will be reduced if the concrete slab and building are insulated properly. The following will also have a high heat demand: poorly insulated buildings, buildings with large amounts of glass windows/doors, buildings with overhead doors, greenhouses, uninsulated crawl spaces, outdoor air infiltration and air leaking through foundation.

H. VISIBLE EXHAUST COMING FROM CHIMNEY

Review the information in the Adding Wood section, starting at step 5.

There are conditions related to outside temperatures, humidity, fuel moisture, burn rate and other factors that can cause steam to be visible in the exhaust plume of combustion equipment, whether it is wood, gas or oil.

Seeing a white exhaust plume with moisture present is normal under many conditions and is not suggestive of poor combustion or high emissions.

Opacity is the amount of light which is blocked in an exhaust plume. It is a measurement that is usually stated as a percentage. For example, an opacity of 0% means that all light passes through while an opacity of 100% means that no light can pass through. Opacity measurements give an indication of the concentration of particles in an exhaust plume.

To read opacity correctly, observations should be made only when:

- The sun is shining and behind you,
- You are at least three times the distance of the chimney height away from the furnace, and
- The plume is traveling perpendicular to your position.

The observation should be conducted looking at the point of the plume where condensed water vapor (steam) is not present. Do not observe the plume itself but rather look through it at a contrasting background (such as green leaves or trees). There are many other important factors as well.

The amount of visible emissions can be reduced by burning seasoned wood, by making sure that your chimney meets the recommendations in this owner's manual and by loading the firebox to match your heat load. Once the water content of the wood has evaporated, the emissions become very transparent.

1. **Too much ash in firebox** - Refer to Routine Maintenance for ash removal.

I. CORROSION IS PRESENT - CALL DEALER

NOTE: To reduce condensation in the firebox, it is not recommended to set the temperature below 185˚F (85˚C).

1. **Burning garbage or plastic** -Do not burn garbage or plastic. It is likely unlawful and may damage the firebox in a very short period of time.

NOTE: Chloride or sulfurous gases can be generated if plastic or rubber is burned and will mix with the moisture from the wood to form hydrochloric or sulfuric acids in the firebox, creating corrosion.

2. **Firebox wasn't cleaned out at the end of the heating season** - Be sure to follow the post-heating season maintenance schedule which includes scraping out firebox and removing all ash.
3. **Cleaning rod not run through ash bed prior to loading wood** - It is important that you push the cleaning rod back and forth through the ash bed each time prior to loading wood to allow air flow and prevent the ashes from accumulating moisture. See Operating Instructions for more details.

GENERAL INFORMATION

Make note of these precautionary statements, also found on the outdoor furnace.

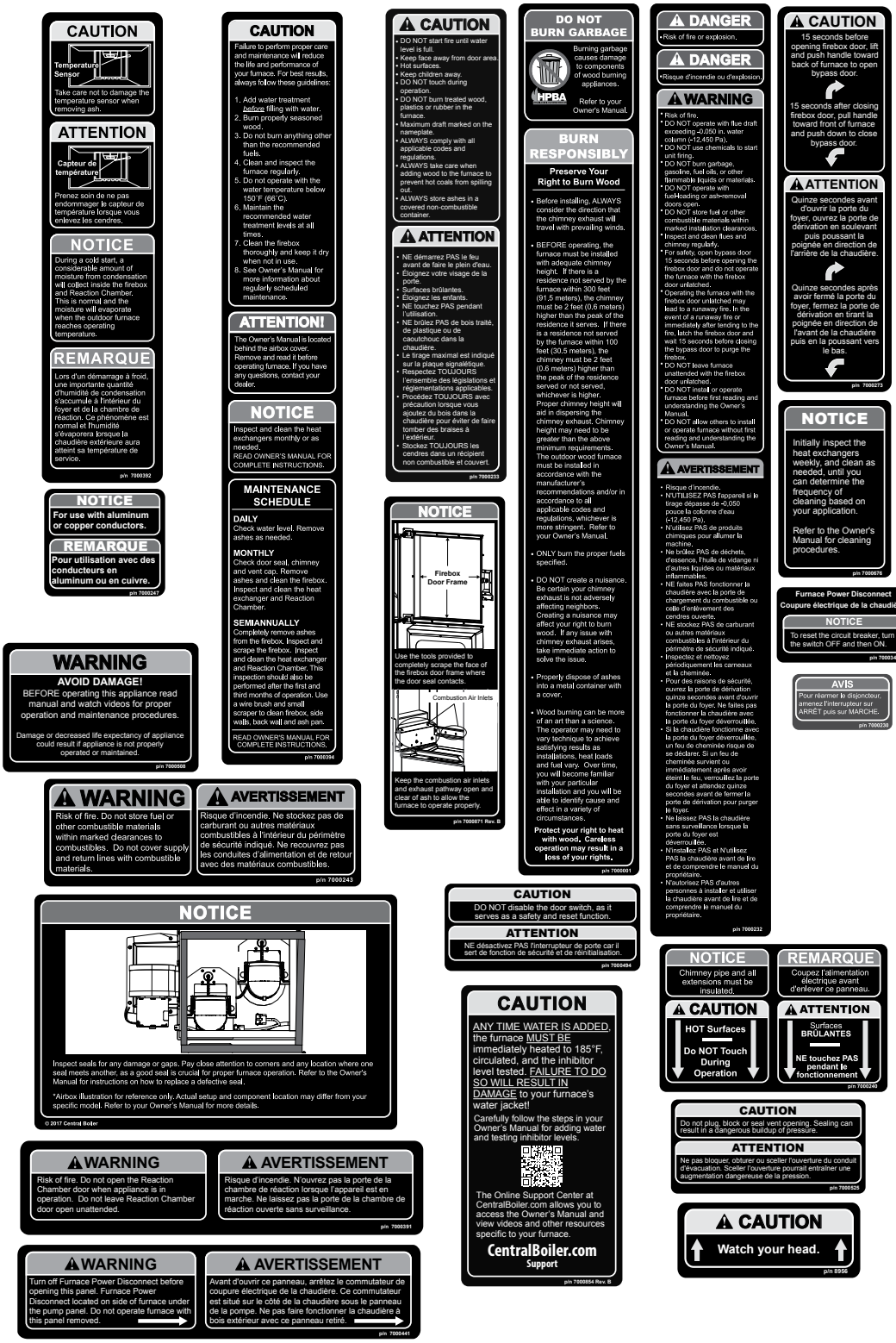

WIRING DIAGRAM

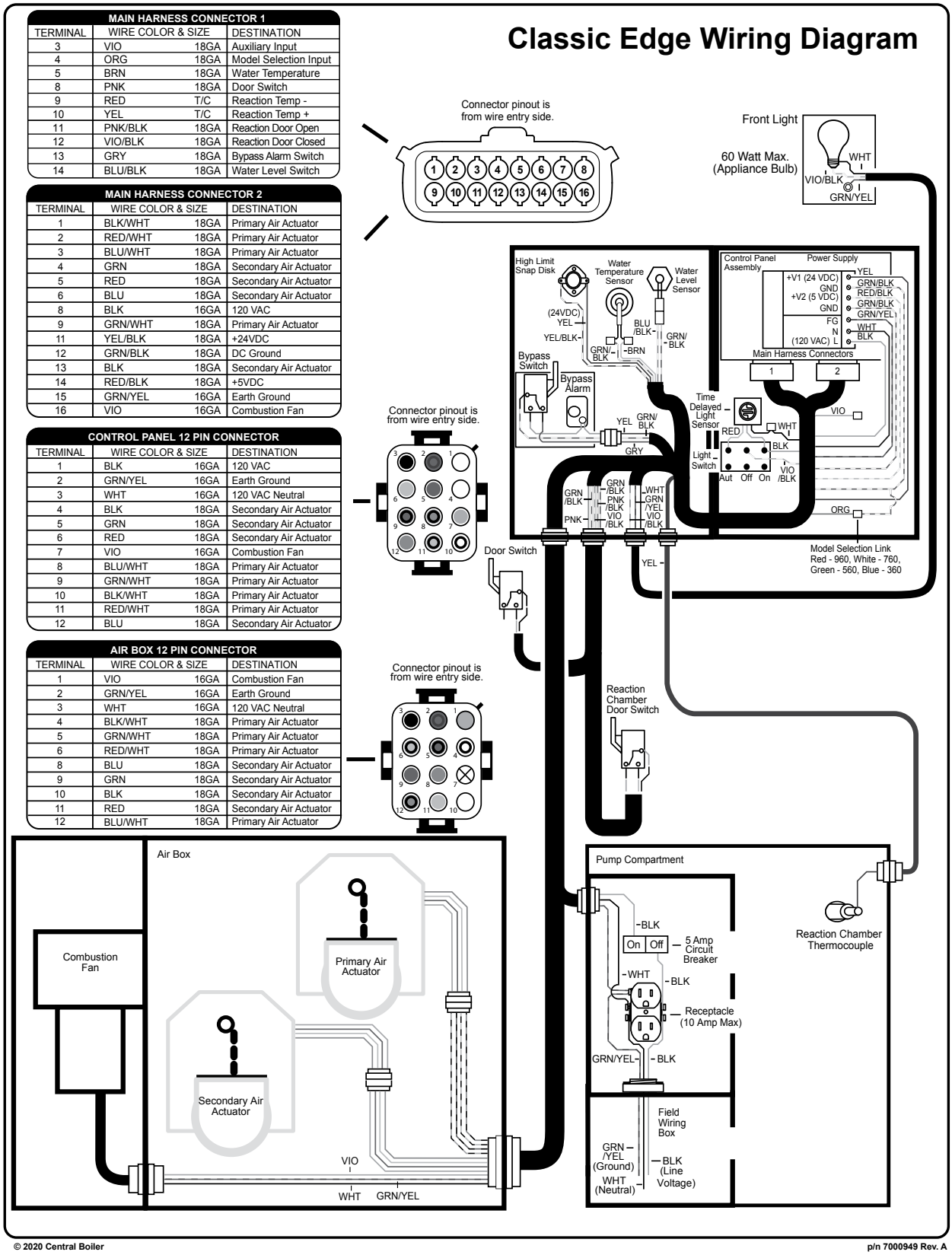

MAIN HARNESS CONNECTOR 1

TERMINAL	WIRE COLOR & SIZE		DESTINATION
3	VIO	18GA	Auxiliary Input
4	ORG	18GA	Model Selection Input
5	BRN	18GA	Water Temperature
8	PNK	18GA	Door Switch
9	RED	T/C	Reaction Temp -
10	YEL	T/C	Reaction Temp +
11	PNK/BLK	18GA	Reaction Door Open
12	VIO/BLK	18GA	Reaction Door Closed
13	GRY	18GA	Bypass Alarm Switch
14	BLU/BLK	18GA	Water Level Switch

MAIN HARNESS CONNECTOR 2

TERMINAL	WIRE COLOR & SIZE		DESTINATION
1	BLK/WHT	18GA	Primary Air Actuator
2	RED/WHT	18GA	Primary Air Actuator
3	BLU/WHT	18GA	Primary Air Actuator
4	GRN	18GA	Secondary Air Actuator
5	RED	18GA	Secondary Air Actuator
6	BLU	18GA	Secondary Air Actuator
8	BLK	16GA	120 VAC
9	GRN/WHT	18GA	Primary Air Actuator
11	YEL/BLK	18GA	+24VDC
12	GRN/BLK	18GA	DC Ground
13	BLK	18GA	Secondary Air Actuator
14	RED/BLK	18GA	+5VDC
15	GRN/YEL	16GA	Earth Ground
16	VIO	16GA	Combustion Fan

CONTROL PANEL 12 PIN CONNECTOR

TERMINAL	WIRE COLOR & SIZE		DESTINATION
1	BLK	16GA	120 VAC
2	GRN/YEL	16GA	Earth Ground
3	WHT	16GA	120 VAC Neutral
4	BLK	18GA	Secondary Air Actuator
5	GRN	18GA	Secondary Air Actuator
6	RED	18GA	Secondary Air Actuator
7	VIO	16GA	Combustion Fan
8	BLU/WHT	18GA	Primary Air Actuator
9	GRN/WHT	18GA	Primary Air Actuator
10	BLK/WHT	18GA	Primary Air Actuator
11	RED/WHT	18GA	Primary Air Actuator
12	BLU	18GA	Secondary Air Actuator

AIR BOX 12 PIN CONNECTOR

TERMINAL	WIRE COLOR & SIZE		DESTINATION
1	VIO	16GA	Combustion Fan
2	GRN/YEL	16GA	Earth Ground
3	WHT	16GA	120 VAC Neutral
4	BLK/WHT	18GA	Primary Air Actuator
5	GRN/WHT	18GA	Primary Air Actuator
6	RED/WHT	18GA	Primary Air Actuator
8	BLU	18GA	Secondary Air Actuator
9	GRN	18GA	Secondary Air Actuator
10	BLK	18GA	Secondary Air Actuator
11	RED	18GA	Secondary Air Actuator
12	BLU/WHT	18GA	Primary Air Actuator

© 2020 Central Boiler

p/n 7000949 Rev. A

WATER SAMPLE INFORMATION - TITANIUM SERIES MODELS

NOTE: It is your responsibility as owner to ensure that your water sample information is accurate and that you submit your samples on a timely basis as required by the warranty for your stainless steel outdoor furnace. Failure to do so will result in a one year warranty.

WATER SAMPLE LABEL INFORMATION

Use the Water Sample Kit provided in your owner's packet or include the water sample label information below when mailing water samples to Central Boiler.

NAME: _____

ADDRESS: _____

CITY: _____STATE:_____ZIP: _____

EMAIL: _____

PHONE: _____ FURNACE SERIAL # _____

DEALER: _____

DATE SAMPLE COLLECTED: _____

☐ NO ANTIFREEZE ADDED ☐ANTIFREEZE ADDED

Please check ONE box

FOR LAB USE ONLY:

Moly pH Ni Date

MAILING LABEL

Use the Water Sample Kit provided in your owner's packet or send water samples to Central Boiler, Attn: Water Quality Department, 20502 160th Street, Greenbush, MN 56726.

FROM _____

_____

_____

CENTRAL BOILER, INC.
ATTN: WATER QUALITY DEPARTMENT
20502 160th Street
Greenbush, MN 56726

LIMITED WARRANTY - CLASSIC EDGE TITANIUM SERIES MODELS

Central Boiler, Inc. ("Central Boiler") warrants to the original owner, except (a) parts manufactured by others and excluded from warranty coverage below; and (b) parts or items specified below as covered by a limited one year warranty, Central Boiler Classic, Classic Edge and E-Classic Titanium Series furnaces against defects in workmanship and against corrosion failure of the firebox/water jacket assembly for a period of TWENTY-FIVE (25) YEARS from the date of original retail purchase, provided that the Limited Warranty Registration Form is completed and sent to Central Boiler within seven (7) days of the original owner taking possession of the furnace and the original owner strictly complies with the instructions for maintenance and corrosion inhibitor contained in the Owner's Manual; otherwise this Limited Warranty shall be for a period of ONE (1) YEAR from the date of manufacture or one year from original retail purchase, if proof of purchase date can be provided.

If a failure of a warranty covered part occurs that is caused by a defect in workmanship or corrosion, at its option Central Boiler will (1) repair or replace (using new or refurbished replacement parts) the defective or failed part based on the date of original retail purchase at the following prorated scale:

First – Fifth year: Parts and labor will be covered at 100%
Sixth year: Parts will be covered at 70%
Seventh year: Parts will be covered at 60%
Eighth year: Parts will be covered at 50%
Ninth year: Parts will be covered at 40%
Tenth – Twentieth year: Parts will be covered at 15%
Twenty-first – Twenty-fifth: Parts will be covered at 10%

(2) exchange the furnace with a comparable model furnace that is new or which has been manufactured from new or serviceable used parts and is at least functionally equivalent to the original furnace, or (3) provide a discount off the retail purchase price of a new Central Boiler furnace of comparable model based on the pro-rated scale: Years 1-5 100%, years 6-7 at 50%, years 8-10 at 40%, years 11-15 at 30% and years 16-25 at 10%. A replacement furnace/part assumes the remaining warranty of the original furnace/part or ninety (90) days from the date of replacement or repair, whichever provides longer coverage. If a furnace or part is qualified for replacement under the provisions of this limited warranty, at Central Boiler's discretion, the furnace or part may be required to be returned to Central Boiler for inspection and recycling or disposal.

Because maintaining the corrosion inhibitor at a proper level is imperative to preventing corrosion failures, to qualify for the 25 year warranty the operator must comply with the instructions in the owner's manual for maintenance and corrosion inhibitor and send a furnace water sample when the furnace is initially put into service and once each year thereafter to confirm proper maintenance and corrosion inhibitor. No warranty claim can be approved unless the furnace registration and the required water test verifications are on file at Central Boiler.

Parts Manufactured By Others. Parts that are factory-installed by Central Boiler, but are manufactured by others, may be covered by their own manufacturer's warranty and are not covered by this limited warranty, except the FireStar® combustion controller on the Classic, Classic Edge and E-Classic Titanium Series furnace is warranted against defects in workmanship for a period of two (2) years from the date of original retail purchase, provided that the Limited Warranty Registration Form is completed and sent to Central Boiler within seven (7) days of the original owner taking possession of the furnace; otherwise this limited warranty shall be for a period of ONE (1) YEAR from the date of original retail purchase. This limited warranty covers the controller part only; service calls, mileage, and labor to diagnose the problem and install a new part are not covered.

Parts Covered by a Limited One Year Warranty. The following parts are covered by a limited warranty for workmanship defects for one year: gaskets, seals, heat shields, paint, air charge tube, firebox ash pan, combustors, aquastats, actuators, heat refractory, firebrick, air channels, combustion air tubes, turbulators, chimney sections, and chimney tee. This limited warranty covers the part only; service calls, mileage, and labor to diagnose the problem and install a new part are not covered.

EXCLUSIONS AND LIMITATIONS - This Limited Warranty applies only to Central Boiler Classic, Classic Edge and E-Classic Titanium Series outdoor furnaces. This limited warranty covers only those defects or corrosion failures that arise as a result of normal use of the outdoor furnace and does not cover any other defects or problems, including those that arise as a result of: (a) improper maintenance (b) operation outside the furnace's specifications (see owner's manual), accident, abuse, misuse, misapplication, or parts that are not factory-installed; (c) service performed by anyone other than Central Boiler unless authorized by Central Boiler in writing; (d) modifications undertaken without the written permission of Central Boiler; or (e) if any Central Boiler serial number has been removed or defaced. This limited corrosion warranty will be void if the owner fails to maintain the proper amount of MolyArmor 350 Corrosion Inhibitor in the system, fails to send water samples to Central Boiler as required, or burns materials in the firebox other than natural wood. This limited warranty excludes the cost of shipping, labor to remove or reinstall the furnace, plumbing labor and/or parts and the cost of alternative heat if the furnace is out of service for repairs. Warranty excludes replacement of water, inhibitors or other additives, and parts used in the system whether or not mounted on the furnace, such as pumps, valves, and piping.

Central Boiler is not liable for damage or repairs required as a consequence of faulty installations or applications by others or any event of force majeure. Central Boiler is not liable for incidents or accidents which can be prevented by the owner or that occur from the operation of the outdoor furnace. A backup heating system should be in place to prevent damage in case of failure to refuel the outdoor furnace or in the event that mechanical failure of the outdoor furnace or system occurs. Heat replacement representations found in Central Boiler promotional information should be used only as a guideline. Heat loss for all applications with all weather extremes and other heat variables must be considered when sizing an outdoor furnace for different applications.

THIS LIMITED WARRANTY AND REMEDIES SET FORTH ABOVE ARE EXCLUSIVE AND IN LIEU OF ALL OTHER WARRANTIES, REMEDIES AND CONDITIONS, WHETHER ORAL OR WRITTEN, EXPRESS OR IMPLIED. CENTRAL BOILER SPECIFICALLY DISCLAIMS ANY AND ALL IMPLIED WARRANTIES, INCLUDING, WITHOUT LIMITATION, WARRANTIES OF MERCHANTABILITY AND FITNESS FOR A PARTICULAR PURPOSE. IF CENTRAL BOILER CANNOT LAWFULLY DISCLAIM IMPLIED WARRANTIES UNDER THIS LIMITED WARRANTY, ALL SUCH WARRANTIES, INCLUDING WARRANTIES OF MERCHANTABILITY AND FITNESS FOR A PARTICULAR PURPOSE ARE LIMITED IN DURATION TO THE DURATION OF THIS WARRANTY. No Central Boiler dealer or employee is authorized to make any modification, extension, or addition to this limited warranty. CENTRAL BOILER IS NOT RESPONSIBLE FOR DIRECT, SPECIAL, INCIDENTAL OR CONSEQUENTIAL DAMAGES RESULTING FROM ANY BREACH OF WARRANTY OR CONDITION, OR UNDER ANY OTHER LEGAL THEORY. Some states and provinces do not allow the exclusion or limitation of incidental or consequential damages or exclusions or limitations on the duration of implied warranties or conditions, so the above limitations or exclusions may not apply to you. This warranty gives you specific legal rights, and you may also have other rights that vary by state or province.

OBTAINING WARRANTY SERVICE - To obtain warranty service, contact the Central Boiler dealer from whom you purchased your furnace or contact Central Boiler by telephone (800-248-4681) or mail (20502 160th Street, Greenbush, MN 56726). Please provide the dealer's name, original date of sale, model number and serial number in all communications. Central Boiler reserves the right to require the warranty service to be performed at a Central Boiler facility when deemed necessary by Central Boiler. All corrosion repairs will be performed at Central Boiler unless authorized by Central Boiler in writing.

Design Changes. Central Boiler reserves the right to change and improve the product design for improved performance without assuming responsibility to upgrade previously sold products.

©2021 Central Boiler
(p/n 9000828 - REV. A) - JAN-2021

CleanFire

OUTDOOR WOOD FURNACE

OWNER'S MANUAL

CLEANFIRE 900

WARNING: If the information in this manual is not followed exactly, a fire or explosion may result causing property damage, personal injury or loss of life.

- **Do not store or use gasoline or other flammable vapors and liquids in the vicinity of this or any other appliance.**
- **WHAT TO DO IF YOU SMELL GAS**
  - **Do not try to light any appliance.**
  - **Do not touch any electrical switch.**
  - **Immediately call your gas supplier. Follow the supplier's instructions.**
  - **If you cannot reach your gas supplier, call the fire department.**
- **Installation and service must be performed by a qualified installer, service agency or the gas supplier.**

0117WB036S
0117WB041E

MADE IN USA

SAVE THESE INSTRUCTIONS

(p/n 9000847) - REV. A - JAN-2021

Central Boiler, Inc. • 20502 160th Street • Greenbush, MN 56726
CentralBoiler.com

The Classic Edge outdoor hydronic heater by Central Boiler is listed by OMNI-Test Laboratories to the applicable portions of the following standards: UL 2523-2018 Solid Fuel-Fired Hydronic Heating Appliances, Water Heaters and Boilers, CAN/CSA B415.1-10 (R2015) Performance Testing of Solid-Fuel-Burning Heating Appliances, CSA-B366.1-11 (R2015) Solid-Fuel-Fired Central Heating Appliance, ASTM E2618-13 Standard Test Method for Measurement of Particulate Emissions and Heating Efficiency of Solid Fuel-Fired Hydronic Heating Appliances, ASTM E2515-11 Standard Test Method for Determination of Particulate Matter Emissions Collected by a Dilution Tunnel.

The Classic Edge includes two 4-foot stainless steel insulated chimney sections (8" in diameter, p/n 10508 - Classic Edge 960). Use only stainless steel solid fuel chimneys specified by Central Boiler. Maximum draft is marked on nameplate.

French Owner's Manual is available at CentralBoiler.com/support or upon request from your dealer
(Manuel d'installation en français disponible sur demande auprès de votre revendeur)

CLASSIC EDGE 960 — Annual Efficiency Rating*: 92.1% (lower heating value), 85.6% (higher heating value)
Manufacturer's Rated Heat Output Capacity: 400,000 Btu/hr | Range**: 0 to 378,339 Btu/hr.
Water Capacity: 420 gal. | Weight: 2,714 lbs

*Performance is a product of the combustion rate, combustion efficiency and heat exchange efficiency with a single fuel load without refueling. Results vary based on wood species, wood quality, wood quantity and moisture content. Efficiencies are determined under the same test conditions using higher heating value, lower heating value and annual fuel utilization efficiency (AFUE).

- This heater meets the 2020 U.S. Environmental Protection Agency's cord wood emission limits for wood heaters sold after May 15, 2020. Under specific test conditions this heater has been shown to deliver heat at rates shown for the respective model above**.
- This wood heater has a manufacturer-set minimum low burn rate that must not be altered. This wood heater needs periodic inspection and repair for proper operation. It is against federal regulations to operate this wood heater in a manner inconsistent with operating instructions in this manual.
- DO NOT OVERFIRE THIS HEATER. Attempts to achieve heat output rates that exceed heater design specifications can result in permanent damage to the heater.
- Any person(s) operating a hydronic heater must comply with all applicable laws, including but not limited to local ordinances.
- Improper use or failure to maintain the hydronic heater may cause nuisance conditions. The person(s) operating a hydronic heater is/are responsible for operation in a manner that does not create a nuisance condition. Meeting the setback distance and stack height recommendations from the manufacturer and requirements in applicable State and local regulations may not always be adequate to prevent nuisance conditions in some areas due to terrain or other factors.
- Operating an outdoor furnace may not be suitable to some individuals' abilities or lifestyles. Be sure to review the Owner's Manual for the appliance with your dealer.

- Register at time of purchase for FREE 25 Year Limited Warranty -

Verify your warranty and check status of water samples at: CentralBoiler.com/w25

For parts and accessories, service or repairs, call your authorized Central Boiler dealer or heating contractor. Record the information below for future reference.

Model	Serial Number	Installation Date
Dealership Name		Phone Number
Owner Name		

How to Use This Guide

The guide is divided into sections to help with the operation and maintenance of the outdoor furnace. If questions arise that are not answered with this manual, consult with your authorized WoodMaster dealer.

Contents

WoodMaster Online Resources Iv
EPA Resources Iv
Labeling And Terminology 1

Important Precautionary Information 2
Foundation 4
Access to Ports on Outdoor Furnace 5
Ground Rod Kit 6
Furnace Installation - Connecting to Your Existing System 6
Outdoor Wood Furnace Best Burn Practices 8
Chimney Recommendations. 8
Chimney Installation. 8

Water Quality and Maintenance. 11
Test Supply Water 11
Adding Initial Water Treatment. 11
Immediately Heat The System Water 12
Test the Treated System Water 12
Send in Initial Water Sample 13
Annual Water Sample 13
Water Samples 14
System Maintenance 14
Water Test Kits and Test Results 14
Flushing the System. 15
Adding Antifreeze to Outdoor Furnace System 17

Wood Selection and Preparation 18

Operating Instructions 19
FireStar Combustion Controller 19
How The CleanFire Works 19
Cold Start Initial Fire Up 21
Adding Heat Load. 24
Ash Removal Frequency 24
Adding Wood 24

Maintenance Schedule 29
Control Locations. 30
Routine Maintenance 30
Maintenance Sections 31

Serviceable Items. 43
Firebox Door Hinge / Latch Bearing Adjustment 43
Firebox Door Seal 43
Reaction Chamber Door Seal 45
Heat Exchanger Door Seal 46
Circuit Breaker 47
Airbox Seal 48
Air Tube And Refractory Modules. 49
Thermocouple 50
Heat Exchanger Door Insulation. 51
Heat Exchanger Access Cover Insulation. 52
Combustion Air Tube / Front Air Channel. 53

Troubleshooting 55

General Information 64

Wiring Diagram 65

Water Sample Information - CleanFire Models. 66

WOODMASTER ONLINE RESOURCES

Visit **WoodMaster.com** for information to help with installation, operation and maintenance of your WoodMaster outdoor furnace. Explore videos, download owner's resource materials and more.

INSTALLATIONS IN MASSACHUSETTS:

1. All installation components must be products approved in the Commonwealth of Massachusetts by the Gas and Plumbing Board.
2. The maximum run of tubing from the water heater to a fan coil is 50 linear feet.
3. Persons operating this hydronic heater are responsible for operation of the hydronic heater so as not to cause a condition of air pollution as defined in 310 CMR 7.01(1).

Labeling and Terminology

The outdoor furnace and this installation guide use the following terms and symbols to bring attention to the presence of hazards of various risk levels and important information concerning the use and maintenance of the outdoor furnace.

⚠ DANGER

This symbol and text indicate an imminently hazardous situation which, if ignored, will result in death or serious injury.

⚠ WARNING

This symbol and text indicate the presence of a hazard which can cause severe personal injury or death to an operator or bystander, or substantial property damage if ignored.

⚠ CAUTION

This symbol and text indicate the presence of a hazard which can cause minor personal injury or property damage if ignored.

NOTE: Indicates supplementary information worthy of particular attention relating to installation, operation, or maintenance of the outdoor furnace but is not related to a hazardous condition.

Be sure to follow all instructions and related precautions as they are meant for your safety and protection. Store this manual in a readily accessible location for future reference.

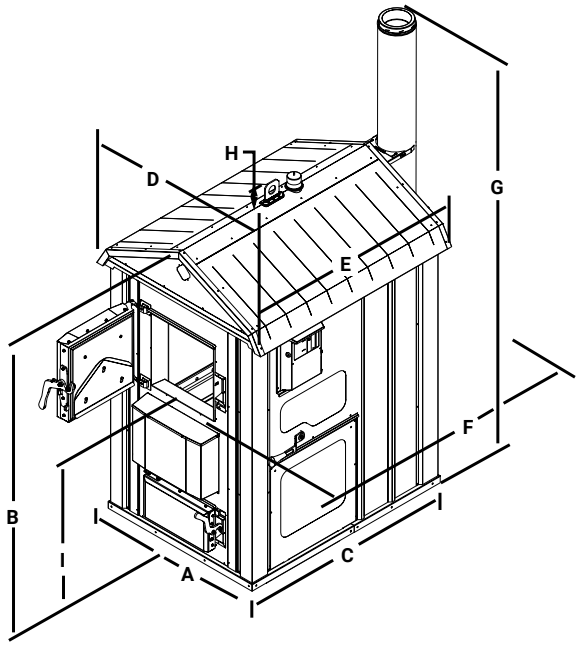

CleanFire 900 Measurements									
	A	B	C	D	E	F	G	H	I
in.	56	87.5	69	58.5	70	89.5	163	5	39
cm	142	222	175	148.5	178	227	414	13	99

- Measurement (F) is from firebox door to chimney inspection cover.
- Measurement (G) includes two 4 ft (1.2 m) chimney sections.
- All measurements are approximate

Important Precautionary Information

Be sure to read carefully and understand these precautions before, during and after the installation, operation and maintenance of the furnace.

NOTE: All operations must be in accordance with local and state codes which may differ from the information in this manual.

⚠ CAUTION

This outdoor furnace is not intended to be the only source of heat. In the event of a prolonged power failure, a generator may be used to prevent lines from freezing. Should the outdoor furnace be left unattended, run out of fuel or require service, an alternate heating source in the building being heated should be in place to prevent damage caused by freezing.

⚠ WARNING

This outdoor furnace and/or chimney is not intended or safety tested to be used or installed in a building where contents of that building could be damaged or where a financial loss could occur from smoke, soot, fire or water.

⚠ WARNING

The outdoor furnace vent cap must fit loosely on the vent opening. Do not force the cap down or try to seal it tightly onto the vent pipe. Do not extend or restrict the vent pipe or opening. DO NOT ALLOW THE OUTDOOR FURNACE TO BE PRESSURIZED.

⚠ WARNING

Be sure the outdoor furnace is filled with water before firing. Never fire the outdoor furnace when the water level is more than 1" (2.5 cm) below the FULL mark on the sight gauge. MolyArmor 350 must be added before the initial fill (see Water Quality and Maintenance).

⚠ WARNING

Disconnect the electrical power to the outdoor furnace before replacing an electrical component.

⚠ WARNING

Do not attempt service inside the electrical control panel without first disconnecting the electrical power at the main power source.

NOTE: Any electrical installation should be done by a qualified installer in accordance with applicable codes.

⚠ WARNING

Allow the outdoor furnace to thoroughly cool and completely clean out the firebox before draining water from the outdoor furnace. If the water in the outdoor furnace ever boils, be sure to check the water level and restore to full. If water is added, the proper level of MolyArmor 350 (p/n 2900631) must be maintained.

⚠ WARNING

When cleaning the outdoor furnace, be careful not to spill any coals.

⚠ WARNING

ALWAYS store ash in a covered non-combustible container.

⚠ WARNING

Do not allow combustible materials (straw, hay or wood) near the outdoor furnace. Keep the perimeter of the outdoor furnace clear and clean.

⚠ WARNING

For fire safety, keep all combustible materials at least six feet (two meters) away from the outdoor furnace, especially around the door area. Debris of wood chips and other combustibles in the area may be easily ignited if a hot coal is spilled out of the firebox and left unnoticed.

⚠ WARNING

The firebox door must be closed and latched at all times except when filling the firebox with wood. Leaving the firebox door open may lead to a runaway fire. In the event of a runaway fire, close the firebox door. In the event of a chimney or soot fire, close the firebox door and make sure power is off to the outdoor furnace.

⚠ WARNING

All covers must be maintained at all times except during maintenance, inspection and service.

⚠ WARNING

When opening the firebox door, the door switch will shut off the primary air actuator motor while the firebox door is open. Do NOT disable the door switch.

NOTE: The prohibition against burning these materials does not prohibit the use of fire starters made from paper, cardboard, saw dust, wax and similar substances for the purpose of starting a fire in an affected wood heater.

NOTE: Do not use chemicals or fluids to start the fire. Use kindling or gas-fired wood ignition option to start an initial fire.

NOTE: The sight gauge valve should always be closed, except when checking water level. Water will automatically drain from the sight gauge tube when the valve is closed. Remember that this type of valve requires only 1/4 turn to open or close.

⚠ WARNING

This heater is designed to burn natural wood only. DO NOT BURN: unseasoned wood, treated wood, colored paper, cardboard, trash or garbage.

NOTE: Chloride or sulfurous gases can be generated if plastic or rubber is burned and will mix with the moisture from the wood and form hydrochloric or sulfuric acids in the firebox, creating corrosion.

NOTE: This outdoor furnace is not to be used with an automatic stoker.

⚠ CAUTION

This outdoor furnace is not to be connected to a chimney flue serving another appliance.

⚠ WARNING

When adding wood to the firebox, be careful not to get pinched between the wood and the door frame, or any part of the outdoor furnace. Use extreme care with large pieces of wood that may be difficult to handle.

Tools

Included with each new furnace are tools that are invaluable for maintenance and cleaning. Use the **maintenance tool** to clean the firebox and to remove ash from the Reaction Chamber. The maintenance tool is also used for cleaning the firebox and door frame. The **cleaning rod** can be used to break up heavy or solidified ash in the firebox. It is also used to clean the heat exchangers. The **Refractory/Chimney Tee cleaning tool** is used to clean ash from the Reaction Chamber and to clean the chimney tee.

Refer to the Maintenance section for more information.

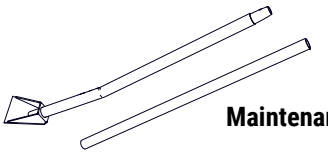

Maintenance Tool

Cleaning Rod

Refractory/Chimney Tee Cleaning Tool

Foundation

The outdoor furnace may be installed directly on stable, level ground without the necessity of a foundation, although installing the outdoor furnace on a foundation offers many advantages. The outdoor furnace is less likely to move due to frost heaving. A foundation keeps the area directly around the outdoor furnace free of standing water and can help to keep unwanted pests out. It can also raise the furnace up to provide a more comfortable height of the firebox door opening.

If the ground is unstable, one option is to use patio blocks under the perimeter of the base. Another option is to pour a concrete foundation.

To install the outdoor furnace on a concrete foundation, refer to the illustration for dimensions and for the location of the hollowed-out area for each model. A 4" to 6" (10 to 15 cm) thick concrete slab works well; however, a thicker slab may be used to obtain the desired door opening height.

If the area for the concrete slab is unstable and/or affected by frost heaving, consider installing 2" closed-cell insulation beneath the front portion of the slab and under the area of the ground used for walking.

⚠ CAUTION

Do not use any combustible materials for the foundation.

NOTE: The installation surface or foundation must be noncombustible. The hot supply and return lines must also be protected from possible exposure to sunlight, fire or physical damage that may be caused by an occurrence outside the outdoor furnace enclosure. Foundations may consist of concrete, crushed rock or patio blocks.

CleanFire 900
(Foundation Optional)

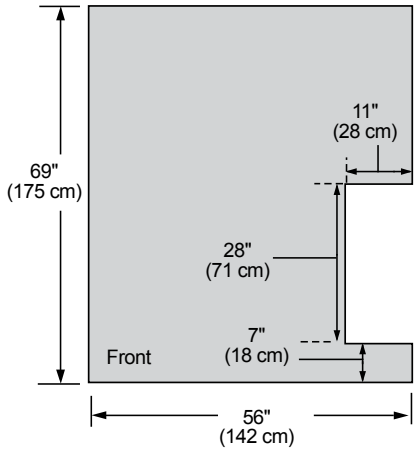

⚠CAUTION
Do not use any combustible materials for the foundation.

Outdoor furnace must be installed on a noncombustible surface or foundation that incorporates an enclosure that will prevent supply and return lines from possible exposure to sunlight, fire, or physical damage that may be caused by an occurrence outside the outdoor furnace enclosure. Foundation may consist of concrete, crushed rock, or patio blocks.

Access to Ports on Outdoor Furnace

Ports are provided that allow mounting circulation pumps on the outdoor furnace. Refer to the illustrations in this section for proper supply and return line and pump installations for your model.

NOTE: The Installation Guide provides more information on pump selection. For even more detailed information, see the Hydronic Component Selection Guide (p/n 2482), available from your WoodMaster dealer.

CleanFire 900 Model – 3-Pump Configuration

3 - Pump Parts List*

Qty	p/n	Description
2	118	Close Nipple, 3/4"
2	198	Ball Valve, 3/4"
2	224	Isolation Flange Kits, 3/4"
1	225	Isolation Flange Kits, 1-1/4"
2	274	90° Street Elbow, 3/4"
2	296	Swing Check Valve, 3/4"
2	409	Close Nipple, 1-1/4"
1	410	Ball Valve, 1-1/4"
1	411	90° Street Elbow, 1-1/4"
3	536	Nipple, 3/4" x 7"
3	556	Power Supply Cord, 32"
1	582	6 Outlet Converter
4	1330	MPT to PEX, 3/4" x 1"
2	5643	Brass Clamp, 1-1/4"
1	5871	Swing Check Valve, 1-1/4"
4	5926	Stainless Steel Clamp Crimp Ring, 1"
1	6593	Grounding Rod Kit
1	5000015	Nipple, 1-1/4" x 2-1/2
3	5800033	0015e3 Pump

*Parts and accessories sold separately. Pump size may vary.

For illustration purposes only.

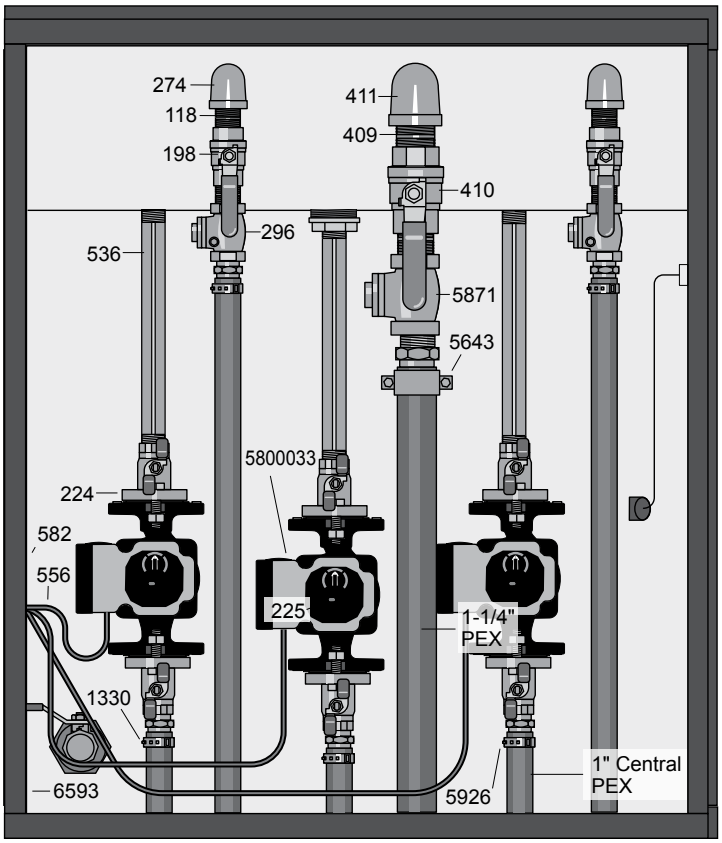

NOTE

Grounding Rod Kit (p/n 6593) must be installed with every furnace.

Ground Rod Kit

The outdoor furnace must be electrically bonded to ground in accordance with the requirements of the authority having jurisdiction or, in absence of such requirements, with the National Electrical Code, ANSI/NFPA 70 and/or the Canadian Electrical Code Part 1, CSA C22.1 Electrical Code.

Install a Ground Rod Kit (p/n 6593) and connect it to the outdoor furnace.

1. In the water line trench near the outdoor furnace, drive the ground rod into the ground until the top of the ground rod is below the ground surface.
2. Route the ground wire from the ground rod under the outdoor furnace base and over to the frame of the outdoor furnace.
3. Secure the ground terminal with a cap screw (1/4" x 3/4"), star washer and nut. Secure the ground wire to the terminal; then secure the ground wire to the ground rod with the clamp. Tighten all hardware securely.

NOTE: A hole for the ground terminal has been pre-punched in the outdoor furnace base near the pumps.

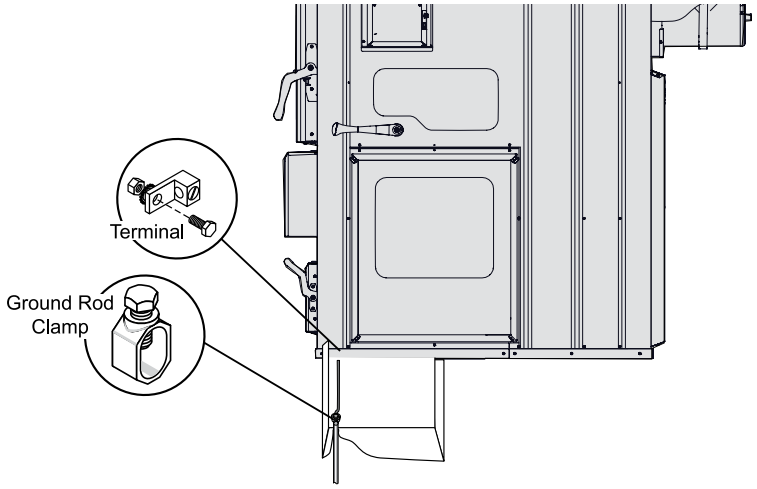

Detailed Furnace Installation Variations

Visit WoodMaster.com to access a library of detailed illustrations for connecting to a wide variety of existing heating systems and for other heating options.

Furnace Installation - Connecting to Your Existing System

A common installation is to connect the outdoor furnace to an existing water heater and then to an existing forced air system. A water-to-air heat exchanger is mounted in the plenum or duct work of the existing furnace. Heated water from the outdoor furnace either continuously flows through the water-to-air heat exchanger or is diverted through a 3-way zone valve. When the thermostat senses the need for heat, the fan on the existing furnace forces air through the heat exchanger, transferring heat throughout the existing ductwork.

NOTE: There are numerous ways to connect to your heating system. Refer to the Outdoor Furnace Installation Guide for other installations.

Typical Installation

Connecting to Water Heater and Forced Air Furnace

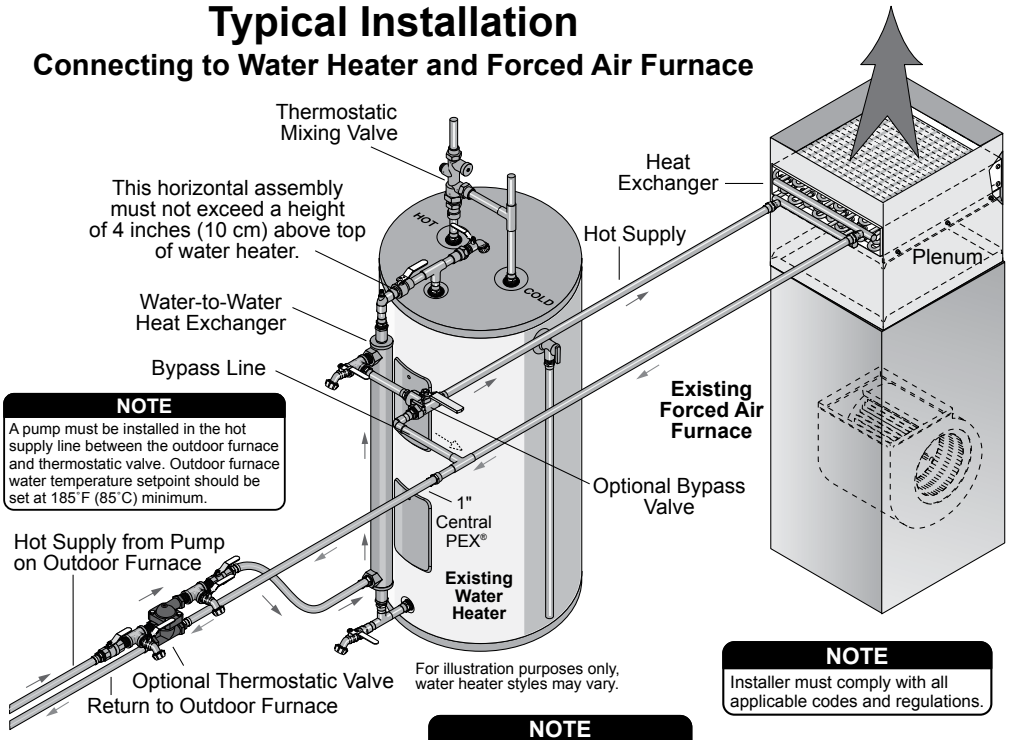

NOTE: A certified electrician must do the electrical installation.

NOTE
Any electrical installation should be done by a qualified installer in accordance with applicable codes.

Remote Thermal Storage Installation

Connecting to Remote Thermal Storage Tank

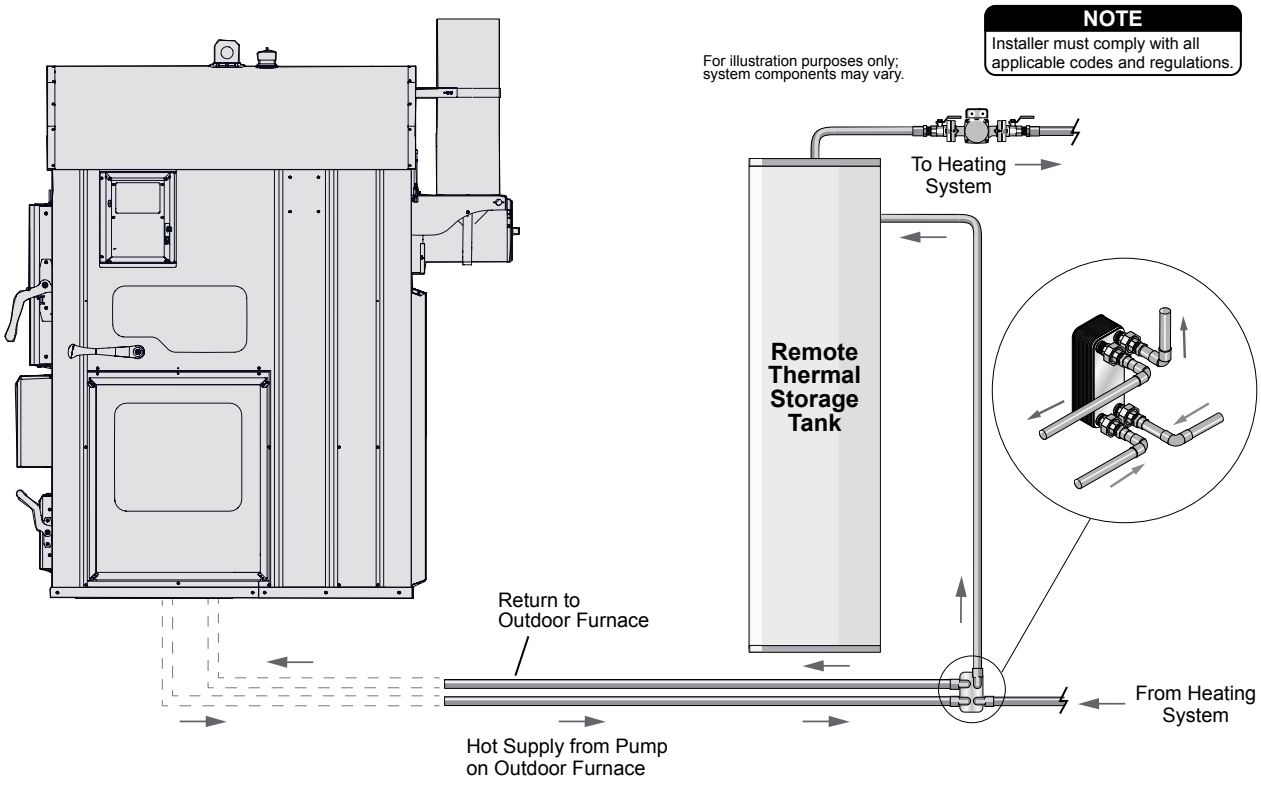

Outdoor Wood Furnace Best Burn Practices

1. Read and follow all operating instructions supplied by the manufacturer.
2. FUEL USED: Only those listed fuels recommended by the manufacturer of your unit. Never use the following: trash, plastics, gasoline, rubber, naphtha, household garbage, material treated with petroleum products (particle board, railroad ties and pressure treated wood), leaves, paper products, and cardboard.
3. LOADING FUEL: For a more efficient burn, pay careful attention to loading times and amounts. Follow the manufacturer's written instructions for recommended loading times and amounts.
4. STARTERS: Do not use lighter fluids, gasoline, or chemicals.
5. CHIMNEY RECOMMENDATIONS: In higher populated areas, extend the chimney to a height above the roofs of surrounding buildings.
6. Always remember to comply with all applicable state and local codes.

Be considerate of neighbors when operating your furnace. If you use your furnace in the summer months, be certain your chimney exhaust is not adversely affecting neighbors with open windows.

Chimney Recommendations

In higher populated areas, extend the chimney to a height above the roofs of surrounding buildings. Use WoodMaster Chimney Extensions when extending the chimney. When only the standard eight feet (2.4 m) of chimney are used, the sections must be secured at the connection joint with four (4) screws to stabilize the extension.

Chimney Installation

NOTE: Instructions for installing chimney sections and the chimney brace assembly are also provided with the furnace.

1. Remove the two slotted hex screws securing the Chimney Slide to the Chimney Support.
2. Remove the six self-tapping screws from the slot in the Chimney Brace Support. These screws are used to assemble the chimney sections.
3. Remove the single slotted hex screw securing the Chimney Strap to the Chimney Brace Support.
4. Install the rope seal at the bottom of the first chimney section; then assemble the chimney as shown.
5. Mount the Chimney Slide to the Chimney Support with two slotted hex screws. Do not tighten completely to allow the Chimney Slide to move.
6. Level the chimney front to back; then position the Chimney Slide against the chimney and completely tighten the two slotted hex screws.
7. Wrap the Chimney Strap around the chimney and secure with a slotted hex screw.
8. Secure the base of the chimney and the joint between the first two chimney sections with three self-tapping screws.

Chimney Section Installation and Chimney Brace Assembly

Illustration for reference only.
Refer to instructions provided with furnace for more information.

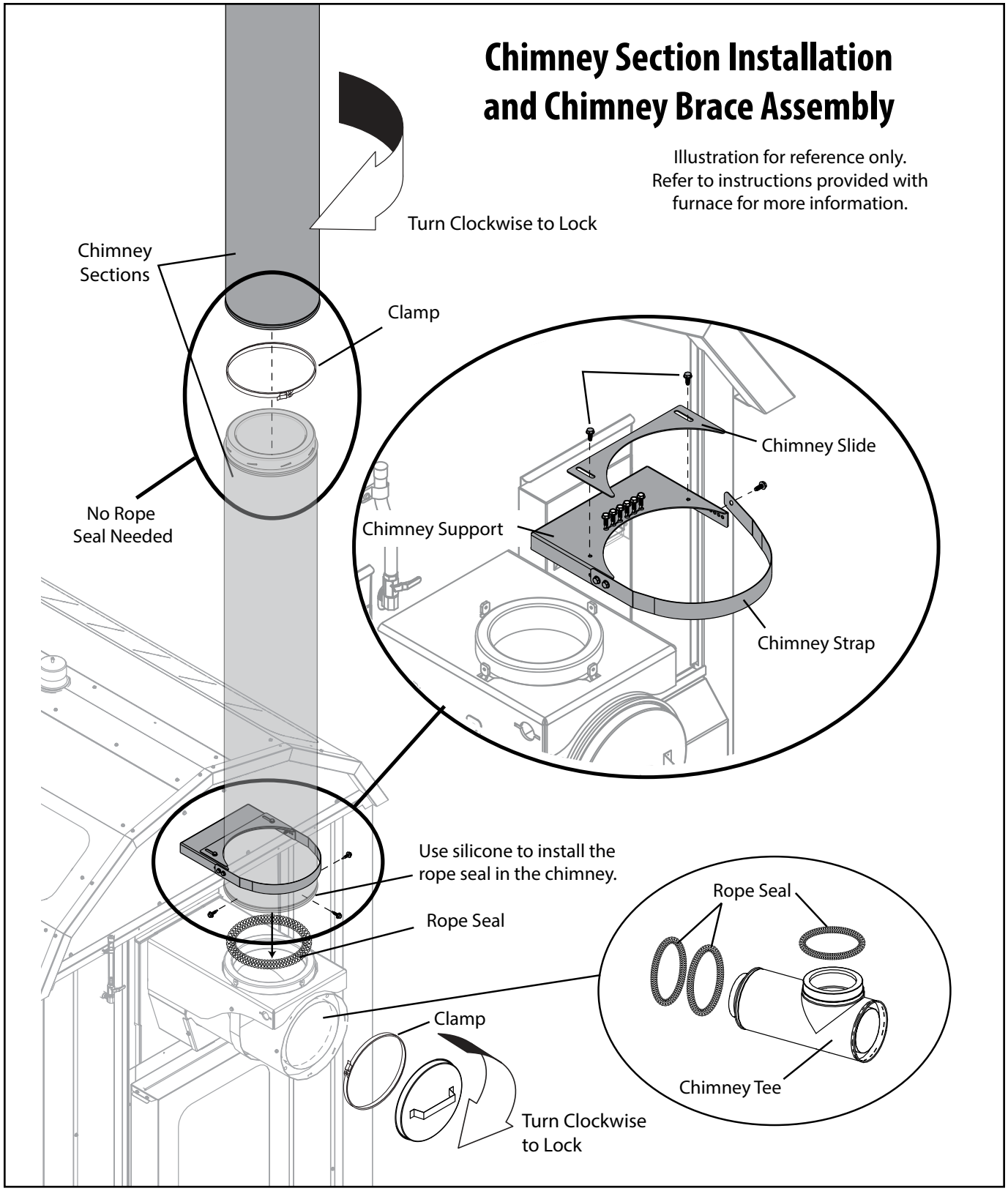

If extensions are added to the standard eight feet (2.4 m) of chimney, the chimney should be reinforced appropriately. The illustration shows chimney support recommendations when three or more sections are used. When adding sections of chimney, make sure that there is nothing within the fall zone of the chimney that could be damaged. If something is located within the fall zone and cannot be removed, guy wires or braces may need to be installed to prevent a falling chimney from causing damage.

NOTE: If more than three 4-foot (1.2-m) sections of chimney are used, a support (e.g., a pole, pipe or other structural support) may be installed from the ground that can withstand wind. Other reinforcement recommendations are shown.

NOTE: For chimney extensions or chimney replacement, use only genuine WoodMaster chimney components. Parts are available from an authorized WoodMaster dealer.

The installation of a spark arrestor is recommended, particularly where there are dry conditions or where there is combustible material near the unit, unless the installation of a spark arrestor is prohibited by local requirements.

NOTE: If the screen is left on the chimney cap, the spark arrestor should be inspected and cleaned as needed.

Use common sense to avoid potential fires, including exercising caution when disposing of ashes, cleaning and refueling. Keep all highly combustible materials (e.g., gasoline, propane, leaves, pine needles, etc.) away from an operating unit at all times. Take special precautions in windy conditions.

NOTE: You may need to increase the chimney height if conditions occur that force exhaust to low levels.

Chimney Reinforcement Recommendations

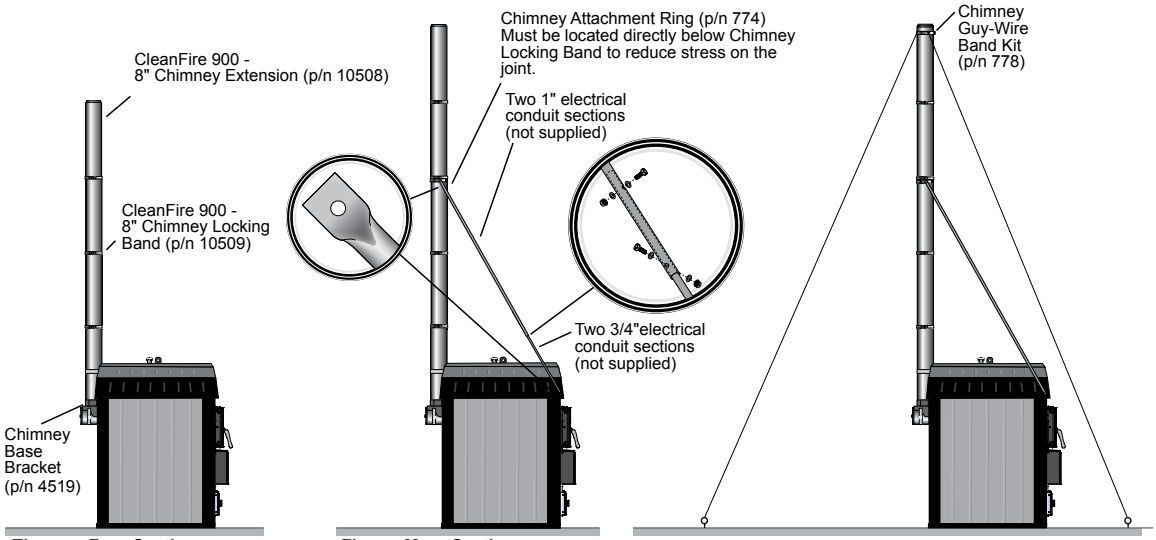

Three or Four Sections
When three or four sections of chimney are being used, a Chimney Base Bracket Kit (p/n 4519) is recommended.

Five or More Sections
When five or more sections of chimney are being used, a Chimney Base Bracket Kit (p/n 4519) and a Chimney Attachment Ring (p/n 774) are recommended.

Fall Zone
If objects are placed in the fall zone of the chimney, a Chimney Guy-Wire Band Kit (p/n 778) or additional bracing is recommended.

NOTE
- Additional bracing may be necessary in certain areas such as those subject to severe weather, winds, freezing rain, etc.
- Inspect all bracing bi-annually for integrity.

WATER QUALITY AND MAINTENANCE

Test Supply Water

Test a sample of the supply water (makeup water) that will be used to fill the outdoor furnace (softened water is recommended). Test strips for testing pH are included in the water test kit which is provided with the outdoor furnace.

1. Collect a small sample of the water to be used to fill the outdoor furnace in a clean container.
2. Dip the pH test strip from the provided test kit in the water sample. Shake excess water off the test strip. Compare the color of the test strip to the chart provided to determine pH level.
3. If the pH level is between 6.5 and 8.0 and there are no other known water quality problems, then the outdoor furnace may be filled with this water.
4. Water that has a pH level of less than 6.5 or greater than 8.0, or that has other known water quality problems, should not be used to fill the furnace. Instead, water should be supplied from a different source.

Adding Initial Water Treatment

⚠ CAUTION

Avoid damaging your furnace and voiding your warranty. Add water treatment BEFORE adding water to the system. Water treatment in your outdoor furnace is just as important as the oil in a car's engine.

MolyArmor 350 Corrosion Inhibitor (p/n 2900631) gives optimum protection for the furnace water jacket and system parts when it is used to initially treat the water and is maintained at a minimum of 350 ppm of moly and pH level between 8.0 and 9.5. The recommended initial treatment rate for the outdoor furnace is specified by units. One unit of MolyArmor 350 is a 1-gallon (3.78-liter) container.

MOLYARMOR 350 TREATMENT AMOUNTS	
CleanFire 900	3 gallons

1. Add the recommended amount of MolyArmor 350 to the outdoor furnace.

NOTE: If the system has a larger than normal water capacity, more MolyArmor 350 should be added at a recommended rate of 6.5 oz. (190 ml) per 10 gallons (37.8 liters) of system water. One unit (1 gallon or 3.78 liters) of MolyArmor 350 will treat 200 gallons (757 liters) of system water.

2. Fill the furnace and system using the instructions to ensure air is purged from the system - refer to Installation Guide.

Immediately Heat the System Water to 185˚F (85˚C)

⚠ CAUTION

Be sure the outdoor furnace is filled with water before firing. Never fire the outdoor furnace when the water level is more than 1" (2.5 cm) below the FULL mark on the sight gauge.

NOTE: The sight gauge valve should always be closed except when checking water level. Water will automatically drain from the sight gauge tube. Remember that this type of valve requires only 1/4 turn to open or close.

1. Refer to Cold Start Firing in the Owner's Manual to start the outdoor furnace. Bring the water temperature up to operating temperature (185˚F or 85˚C) for two hours with the system circulating; then add water to the full mark. Continue to run the pump and circulate the water for 24 hours.

NOTE: It is important to bring the water in the system up to operating temperature (i.e., 185˚F or 85˚C) immediately after filling the system. This also applies any time water is added to the system.

NOTE: If there are multiple circuits connected to the outdoor furnace, repeat the process for each circuit.

⚠ CAUTION

The water in the system may be hot. Use caution and the appropriate personal protective equipment (PPE) when checking for leaks.

2. Check the system for leaks. Inspect all fittings and hose ends for any signs of leakage. Use several dry paper towels and wrap them around and squeeze each fitting, valve and pipe connection. The paper towels will get wet even if there is a very small leak. Immediately repair any leaks to eliminate the need for adding water. If a screw-type clamp has been used, it may be possible to stop a very slow leak at a hose clamp by tightening the clamp after the system has warmed up and the poly becomes more pliable. It might also be necessary to install a second hose clamp with the screw positioned on the opposite side.

NOTE: After a week of operating, use the procedure in step 2 to check the system for leaks again.

NOTE: If water is added, it is important to bring the water in the system up to operating temperature (i.e., 185˚F or 85˚C) immediately. Refer to Water Quality and Maintenance in the Owner's Manual for water testing procedures. If indicated by test results, add MolyArmor 350 as required. Deterioration due to improper operation and/or maintenance is not covered by warranty.

Test the Treated System Water

After circulating the water in the system for at least 24 hours, test the treated system water for the recommended moly (at least 350 ppm) and pH level (between 8.0 and 9.5).

⚠ CAUTION

The water in the sight gauge may be hot. Use caution when obtaining a sample.

1. To obtain a system water sample, bend the sight gauge tube away from the outdoor furnace. Before collecting the sample, open the valve and drain about a quart of water from the sight gauge tube; then carefully fill the sample container without contaminating the sample. **Be sure to properly install the sight gauge tube and close the valve when finished.** The water in the sight gauge valve and tube will drain when the valve is closed.
2. Dip a pH test strip from the test kit in the water sample. Shake excess water off the test strip. Compare the color of the test strip to the chart provided to determine pH level. The pH of the treated water should be between 8.0 and 9.5.
3. Follow the instructions provided in the water test kit to test the moly level of the treated system water.

Maintenance Levels

Test the pH and moly levels after the first three months and every six months thereafter, and after adding water to furnace.

NOTE: It should not be necessary to add water to the outdoor furnace more frequently than once every twelve months. If it is more frequent, either there is a leak in the system or the outdoor furnace is boiling because of improper operation or maintenance (see Troubleshooting Section in the Owner's Manual). Be sure to locate and repair the problem immediately. Frequently adding water can cause deterioration in the water jacket. Each time water is added, refer to Water Quality and Maintenance in the Owner's Manual for water testing procedures. If indicated by test results, add MolyArmor 350 as required. Deterioration due to improper operation and/or maintenance is not covered by warranty.

Send in Initial Water Sample

Your owner's packet contains a Water Sample Kit for submitting an initial water test. Additional Water Samples Kits are available from your WoodMaster dealer.

INITIAL WATER SAMPLE: You are required to submit an initial water sample within 30 days of purchase of your outdoor furnace. EXCEPTION: if your outdoor furnace is not being installed within 30 days of purchase, you must email WoodMaster (service@woodmaster.com) with an estimated installation date, your name and your furnace serial number. When the furnace installation is complete, send the water sample **within 10 days of the initial fill**.

TO CHECK STATUS OF YOUR WATER SAMPLE: Check the status of your water sample at:

WoodMaster.com/w25

You will need your serial number and postal code. Please allow 2-3 weeks for results to be available.

Annual Water Sample

ANNUAL WATER SAMPLE: You are required to submit a water sample yearly prior to the anniversary date of your initial installation. Record the anniversary date below:

_____
DATE OF INSTALLATION

Water Samples

Maintaining the corrosion inhibitor at a proper level is imperative to preventing corrosion failures. To qualify for the 25 year warranty, you must follow the instructions in the Owner's Manual and the Installation and Initial Water Treatment Guide concerning initial water treatment and maintenance. When the outdoor furnace is initially put into service, and once a year after that, you are required to submit a water sample to confirm proper maintenance and water treatment. No warranty claim can be approved unless the outdoor furnace registration and the required water tests verifications are on file at WoodMaster.

NOTE: It is your responsibility as owner to ensure that your water sample information is accurate and that you submit your samples on a timely basis as required by the warranty for your stainless steel outdoor furnace. Failure to do so will result in a one year warranty.

SYSTEM MAINTENANCE

An important part of outdoor furnace maintenance is controlling the quality of the water in the outdoor furnace.

Water Test Kits and Test Results

DATE	pH LEVEL	MOLY LEVEL

Record the results of pH and Moly level tests in the table above.
If additional space is needed, record on a separate sheet of paper.

It is very important to keep record of water test results (including the date, pH and Moly level). The pH and Moly test strips and indicator have a shelf life of approximately two years that can affect their accuracy. Test kits should be stored in a dry area at room temperature to obtain maximum accuracy over a longer period of time.

Biological contamination can occur if the furnace is not heated up to 185˚F immediately after filling it with inhibitor and water as directed.

NOTE: ANY time water is added to the system, it is extremely important to bring the water temperature up to operating temperature (185˚F) as soon as possible, even if it is during the off-season. Failure to bring the water in the system up to operating temperature immediately after filling the system can allow bacteria present in the water to multiply and may increase the potential for corrosion in the sytem.

If the test indicates a significantly lower-than-recommended pH level (below 8.0), add MolyArmor to increase the pH level.

POST HEATING SEASON MAINTENANCE

The water should be left in the outdoor furnace if the outdoor furnace is not being used for an extended period of time.

1. Refer to the Preventive Maintenance Schedule for a list of operations to perform.

Draining Treated System Water

MolyArmor 350 is composed of common materials. Molybdenum compounds characterized as nontoxic in US Public Health Bulletin 293, by the Federal Hazardous Substances Labeling Act, and by the Occupational Safety and Health Act. However, in keeping with good safety and environmental practices, dispose furnace water in accordance with federal, state and local regulation. Unless regulation prohibits, you may drain the outdoor furnace to a home septic system. If doing so, however, be careful not to overflow the septic system.

Do not drain the outdoor furnace in such a manner that the drain water could in any way contact surface water, stream, river, estuary (where a river meets a sea), lake, pond, ocean or other types of waters.

Do not drain to any location within 50 feet (15 meters) of any water well.

2. Shut off the power supply to the outdoor furnace.
3. Place a cover over the chimney to keep rain from entering the outdoor furnace. Clean and oil the chimney flue to the firebox.

Flushing the System

If the system water is brown or orange, it is an indication that the corrosion inhibitor level has not been maintained correctly and corrosion is present in the water jacket. Sludge Conditioner (p/n 166) can be used by circulating the recommended amount through the furnace **for one week** to help clean some of the corrosion from inside the water jacket before flushing, draining and refilling with water and the correct amount of MolyArmor 350.

NOTE: Use one unit of Sludge Conditioner per 200 gallons of system water.

1. De-energize the pump(s) and close the supply and return valves on the outdoor furnace. Remove the inspection panel and insulation covering the drain to gain access to the drain valve. Remove the cap and connect a hose to the drain.
2. Open the drain to drain the system; then flush the top of the firebox and bottom of the water jacket beneath the firebox using a wand placed in the vent.

⚠ CAUTION

Completely clean out the firebox before draining water from the outdoor furnace.

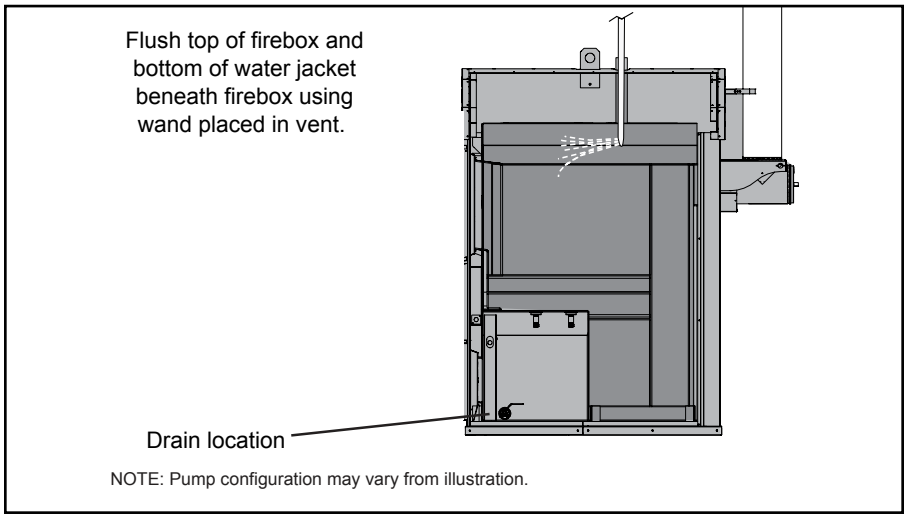

3. Close the drain valve securely and replace the cap on drain after flushing the outdoor furnace.
4. Add recommended amount of MolyArmor 350.

5. Fill the outdoor furnace following the procedure in Finalizing the Installation in the Installation Guide. Start the pump(s) and bring the water temperature up to operating temperature (185˚F) for 24 hours with the system circulating to thoroughly mix the MolyArmor 350.

NOTE: ANY time water is added to the system, it is extremely important to bring the water temperature up to operating temperature (185˚F) as soon as possible, even if it is during the off-season. Failure to bring the water in the system up to operating temperature immediately after filling the system can allow bacteria present in the water to multiply, which may increase the potential for corrosion in the system.

6. Insulate the area using a mat of fiberglass insulation.

7. Install the inspection panel and secure with self-tapping screws.

Adding Antifreeze to Outdoor Furnace System

Most outdoor furnaces are installed **without** antifreeze when an existing heating system is in place and there is no anticipation of leaving the outdoor furnace unattended for extended periods of time (10 days or more). If the building being heated has an alternate heat source, system water may be kept from freezing by running the circulating pump(s) and drawing heat from the existing furnace or boiler in the home or building.

To prevent freezing if the outdoor furnace is not fired for extended time periods or if lengthy power outages are anticipated during cold weather, a nontoxic propylene glycol may be used in the system. Some types of antifreeze that contain various inhibitors have been known to create problems like coagulation and jelling. To prevent potential problems, **do not use propylene glycol that is premixed with inhibitors**. MolyArmor 350 is compatible with (raw) propylene glycol. It is important to use MolyArmor 350 with straight propylene glycol for corrosion protection. If adding antifreeze to the system, it is imperative that the entire system contain **at least 30% antifreeze concentration mixed with softened, reverse osmosis or deionized water** to prevent bacterial growth and minimize minerals in the system. Bacterial growth is likely to occur with low antifreeze concentrations and can cause corrosion in the furnace water jacket and/or clogging of heat exchangers. To confirm the antifreeze solution is adequate and to kill bacteria, immediately heat the system up to 185˚ F, allow the pumps to circulate for at least 24 hours and then obtain a sample of the system water. Using an antifreeze tester, the solution must be protected to 10˚F (-12˚C) or below.

NOTE: If using antifreeze, test the pH and Moly levels once each month. If the bacterial issues occur, the pH will decrease.

NOTE: Be sure to adhere to all warnings and precautions on the antifreeze label.

NOTE: Do not use automotive or RV types of antifreeze.

Before You Start Operating Your CleanFire Outdoor Wood Furnace

Be sure to read carefully and observe all of the information in the entire Owner's Manual.

If any questions arise that cannot be answered by the information in this manual, be sure to contact your dealer.

NOTE: If wood supply is mostly shorter pieces (e.g., 14"-16" long), it may be necessary to load pieces end-to-end (see example below).

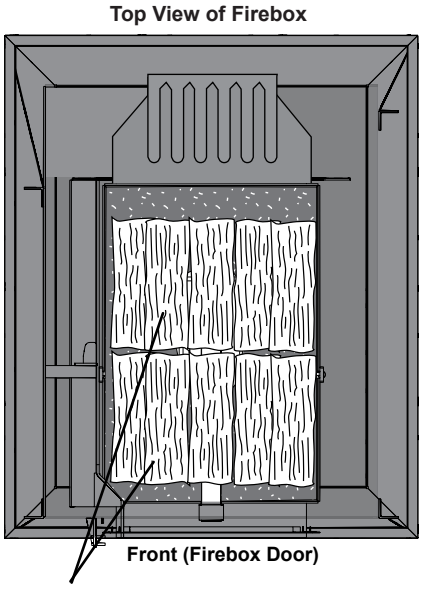

Load shorter wood pieces (14"-16") end-to-end

Wood Selection and Preparation

For the best results, it is best to burn seasoned split wood. However, it may be possible to burn some unsplit wood with the split wood depending on quality, size, moisture content and wood type. Properly seasoned wood has a moisture content of 20% or less. It is darker, has cracks in the end grain, and sounds hollow when smacked against another piece of wood. Most wood needs to be split to dry down to 20% within a year. Wood between 4" and 8" (10 and 20 cm) in diameter works well in most cases. Pieces of wood that are too large can reduce output capacity because they burn slower.

- Wood that works well in most cases:
  - Is between 4" and 8" (10 and 20 cm) in diameter
  - Is approximately 60-70% of the length of the firebox
  - Typically weighs 10-15 pounds per cubic foot for heavy heat loads
- Pieces of wood that are too large can reduce output capacity because they burn slower. Wood that is too long can cause bridging.
- Seasoned wood burns more efficiently, minimizes the amount of creosote formation and reduces emissions.
- Maintain a quantity of smaller, drier pieces of wood for relighting the fire if the wood load is burned very low or becomes completely empty.
- Green wood contains about 50% moisture by weight. Energy is required to heat the wood and evaporate the moisture - energy which could have been used to provide heat for the home. The illustration below shows that burning drier, seasoned wood provides more energy for heating your home compared with burning green, unseasoned wood that uses more energy to evaporate the moisture and provides less energy for heating your home.

NOTE: Do not store wood within the outdoor furnace installation clearances or within the spaces required for fueling, ash removal and other routine maintenance operations.

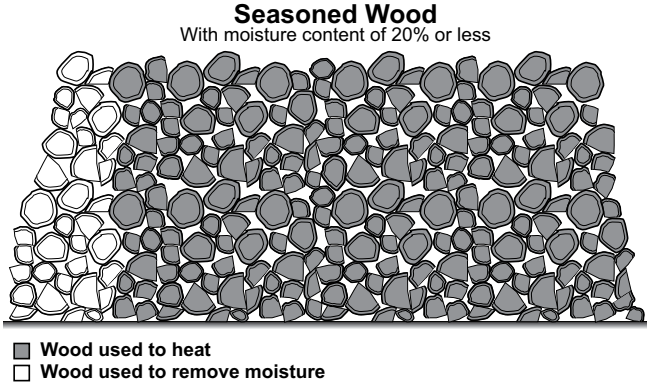

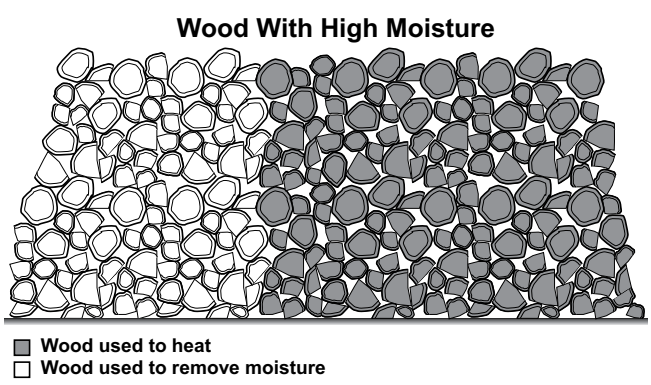

Operating Instructions

FIRESTAR COMBUSTION CONTROLLER

Refer to the FireStar Combustion Controller Operation Manual for information about the combustion controller.

How the CleanFire Works

Because of its highly efficient and clean-burning design, the CleanFire operates differently than other types of wood-burning devices. Understanding a few basic principles will help you operate the CleanFire as it was designed, maximizing its performance, heat transfer and longevity.

NOTE: For proper operation, the fuel must match the heat load, the furnace must be maintained to ensure proper air flow, and the water temperature must be kept above 150˚F (66˚C).

1. The combustion air fan pressurizes the airbox located at the front of the outdoor furnace. Primary air flow, regulated by an actuator motor, flows into the firebox through combustion air inlets located on the front and sides near the bottom. Secondary air is regulated by a second actuator motor that allow air flow through the air tube. Combustion starts in the firebox near the bottom of the wood load.

Operating with Properly Seasoned Wood

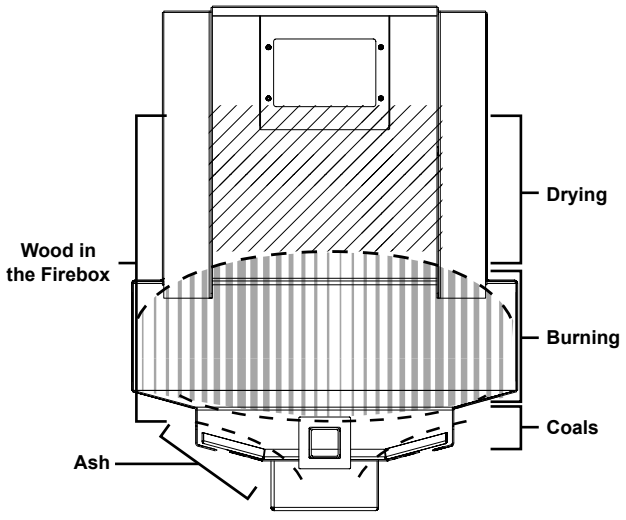

- Burns more efficiently
- Minimizes amount of wood used
- Reduces emissions
- Extends life of furnace
- Reduces bridging

Operating with Wood with Too Much Moisture

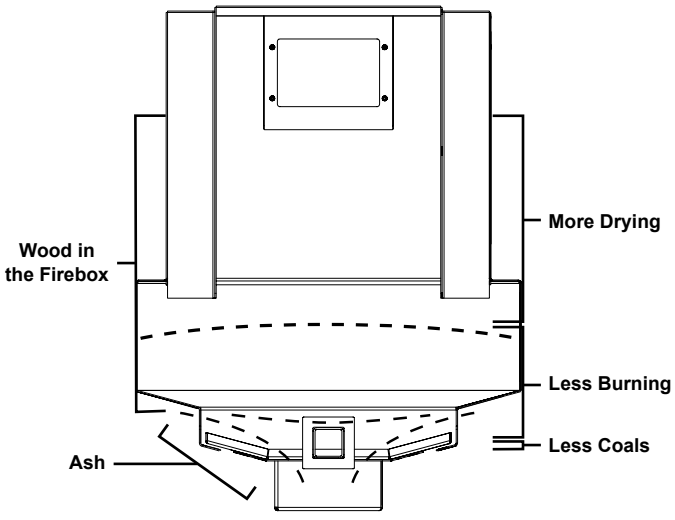

- Burns less efficiently
- Increases amount of wood used
- Lowers combustion rates
- Increases maintenance requirements
- Increases bridging

NOTE: When the volume of burning wood is greater than the volume of drying wood, the outdoor furnace operates more efficiently.

NOTE: The combustion air inlets must be visible (i.e., ash must be kept below the combustion air inlets as shown).

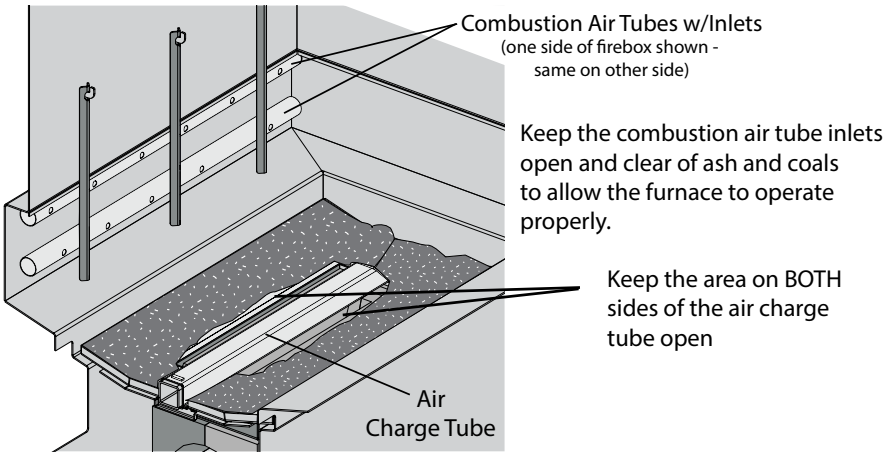

2. Gasified fuel exits the bottom of the firebox alongside and under the air tube, down to the Fusion Combustor and Reaction Chamber. Final combustion occurs in the Reaction Chamber where extremely high temperatures aid in complete combustion. The chimney creates a draft (negative pressure) which helps to draw exhaust gases from the furnace.

3. Heat is transferred to the water from the hot gases as they move through the firebox, the Reaction Chamber and the heat exchanger.

CORRECT
(Proper Flow)

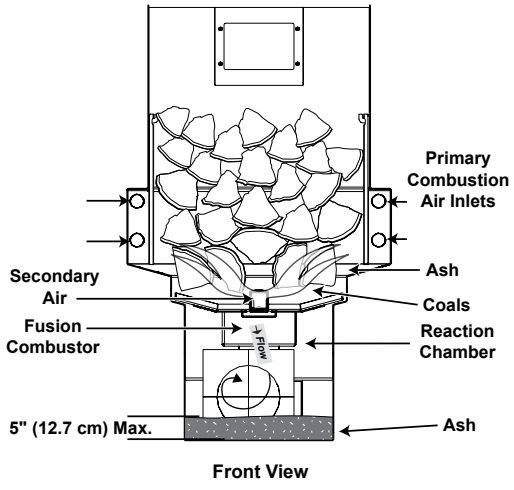

NOTE: The illustration shows the CleanFire operating correctly with proper combustion air flow and with the wood properly loaded.

NOTE: A key point to remember about the operation of the CleanFire is that as wood burns, the combustion gases flow down through the bottom of the firebox so the proper flow must be maintained as shown.

NOTE: Refer to the General Troubleshooting Information for more information on outdoor furnace operation and for conditions to avoid.

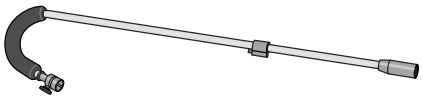

Outdoor Torch

The optional Outdoor Torch (p/n 2900325) is an excellent tool for starting a fire. Attaches quickly to an external propane tank and can be directed at the bottom of a wood pile for quicker, easier combustion.

Cold Start Initial Fire Up

NOTE: These procedures apply to initial firing from a cold start at the start of the heating season.

⚠ CAUTION

Do not burn plastic, garbage, treated wood or fuels not listed for this outdoor furnace.

NOTE: Before firing the outdoor furnace for the first time, make sure the proper amount of MolyArmor 350 has been added and the water level is 1" below the full mark on the sight gauge, as the water will expand when heated.

Two options are provided for a clean, easy startup. Using lump charcoal is the easiest and fastest method. Be sure the wood (including the kindling) is dry for the best results.

NOTE: During startup, the Reaction Chamber percentage will increase as the combustion process ramps up. Optimum burn occurs when the Reaction Chamber percentage is maintained between 70% and 100%. The drier the wood that is used during startup, the faster these percentages can be reached.

Startup Option A - Lump Charcoal

NOTE: Keep the bypass door closed for this procedure.

1. Disconnect the heat load draw by turning off the pump(s).
2. Open the firebox door and add 10 pounds of lump charcoal to cover the charge tube.
3. Turn the controller on by pressing the **Power** ⏻ button; then press the Ignition Air button to turn on the primary combustion air for the initial fire up process when the firebox door is open.

Cold Start Initial Fire Up with Lump Charcoal

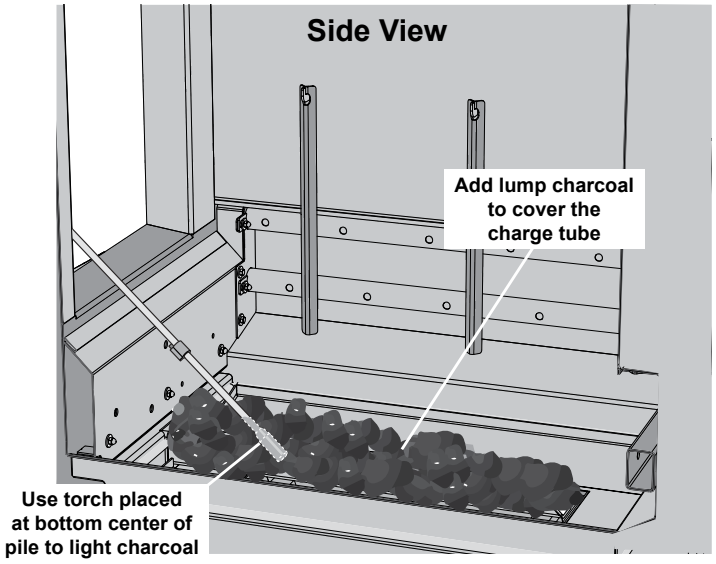

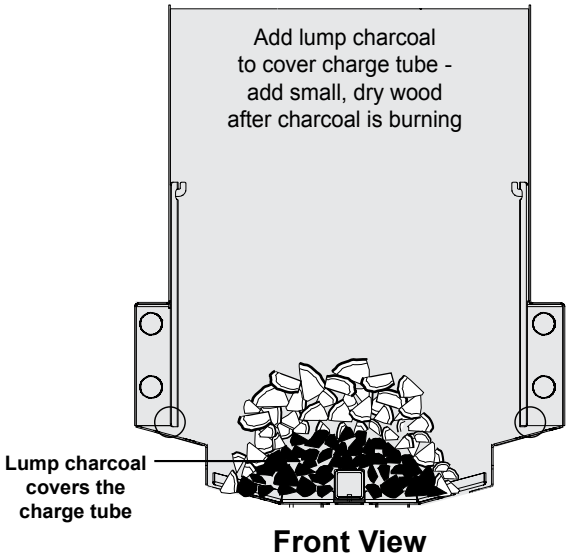

4. Ignite the lump charcoal making sure that the charcoal on both sides of the charge tube is burning.
5. Add small pieces of dry wood to a level just above the primary air tubes on the sides of the firebox.
6. Close and latch the firebox door.

⚠ CAUTION

Do not leave the firebox door open while the fire is burning. Damage to the door seal and paint on the front of the outdoor furnace will result and it could cause a dangerous build-up of gas in the firebox.

7. Allow the wood load to burn until the water temperature reaches 175˚F (79˚C). Turn on the pump(s) and let run for 24 hours to circulate the system water. If this is the initial startup of the furnace, at this point a proper water sample can be taken.

⚠ WARNING

When opening the firebox door, the door switch will shut off the primary air actuator motor while the firebox door is open. Do NOT disable the door switch.

Startup Option B - Dry Kindling

NOTE: Keep the bypass door closed for this procedure.

1. Disconnect the heat load draw by turning off the pump(s).
2. Open the firebox door and add small, dry kindling to cover the charge tube. Smaller kindling is preferred. It should be staggered and able to ignite and burn quickly for the initial fire. The intent is to make sure the combustion air will be able to flow past the charge tube and into the Reaction Chamber.

Cold Start Initial Fire Up with Dry Kindling

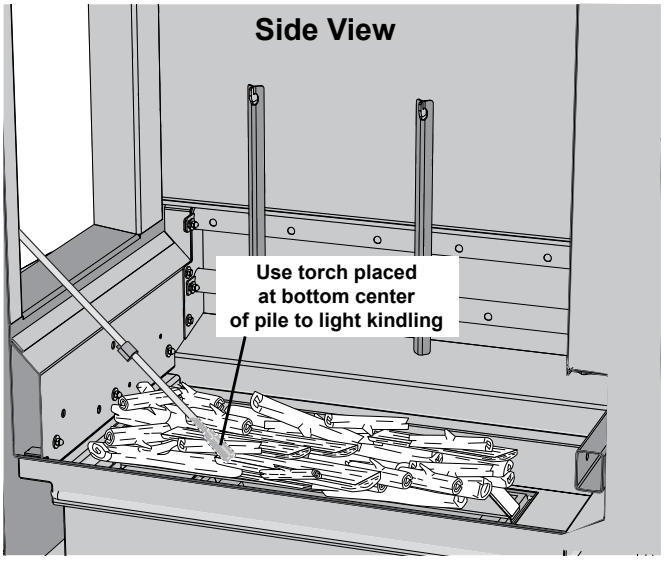

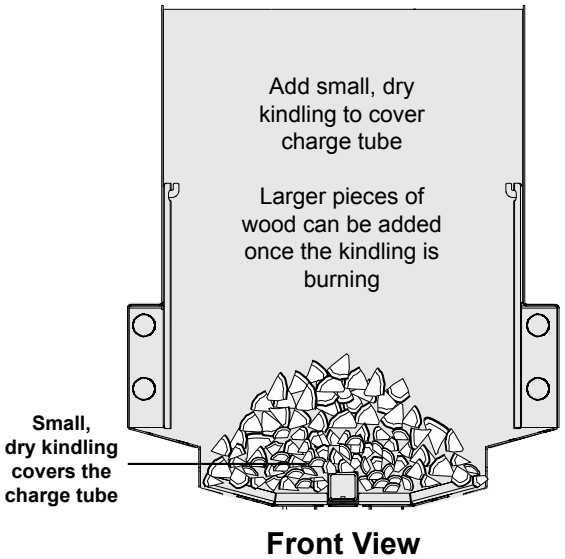

3. Turn the controller on by pressing the **Power** button; then press the Ignition Air button to turn on the primary combustion air for the initial fire up process when the firebox door is open.

4. Ignite the bottom side of the kindling. Make sure the wood on both sides of the charge tube is burning. Once the kindling is burning, add larger pieces of dry wood to just above the primary air tubes.

NOTE: Add enough wood to bring the water temperature up to 175˚F (79˚C).

5. Close and latch the firebox door.

⚠ CAUTION

Do not leave the firebox door open while the fire is burning. Damage to the door seal and paint on the front of the outdoor furnace will result and it could cause a dangerous build-up of gas in the firebox.

6. Allow the wood load to burn until the water temperature reaches 175˚F (79˚C). Turn on the pump(s) and let run for 24 hours to circulate the system water. If this is the initial startup of the furnace, at this point a proper water sample can be taken.

⚠ WARNING

When opening the firebox door, the door switch will shut off the primary air actuator motor while the firebox door is open. Do NOT disable the door switch.

Adding Heat Load

NOTE: During initial start-up, a considerable amount of moisture from condensation will collect inside the firebox and heat exchanger and may drip out of the Reaction Chamber door. This is normal and the moisture will evaporate after the first couple of fuel loads.

1. With no heat load draw in the system, monitor the operation of the outdoor furnace until the water temperature reaches the water temperature setpoint.

2. Turn on the pump(s); then start a heat load draw in the system by turning up the thermostat in the house. Monitor the outdoor furnace for one hour or until another cycle occurs (i.e., outdoor furnace goes from combustion to idle mode). If the water temperature drops and does not recover to the water temperature setpoint within one hour of starting the heat load draw, the heat load draw should be shut off, allowing the furnace to cycle to the idle mode again.

NOTE: The outdoor furnace will not operate satisfactorily if the heat load is higher than the output capacity of the outdoor furnace.

3. At this point, there should be glowing coals established in the bottom of the firebox. The firebox can be filled with dry, seasoned split wood.

Ash Removal Frequency

During the first week of operation, check the level of ash in the Reaction Chamber every two days. Ash needs to be removed from the Reaction Chamber before it obstructs the combustion air flow for efficient operation. Clean the Reaction Chamber before it becomes 1/2 full of ash (approximately 5" or 13 cm deep in any area of the Reaction Chamber).

Adding Wood

1. Slowly lift and push the bypass door handle toward the back of the outdoor furnace to open the bypass door; then wait for 15 seconds.

NOTE: The alarm is a reminder that the bypass door is open. During a cold start, it will continue to sound.

⚠ WARNING

Keep your face away and stay as far away as possible from the firebox door area when opening the door.

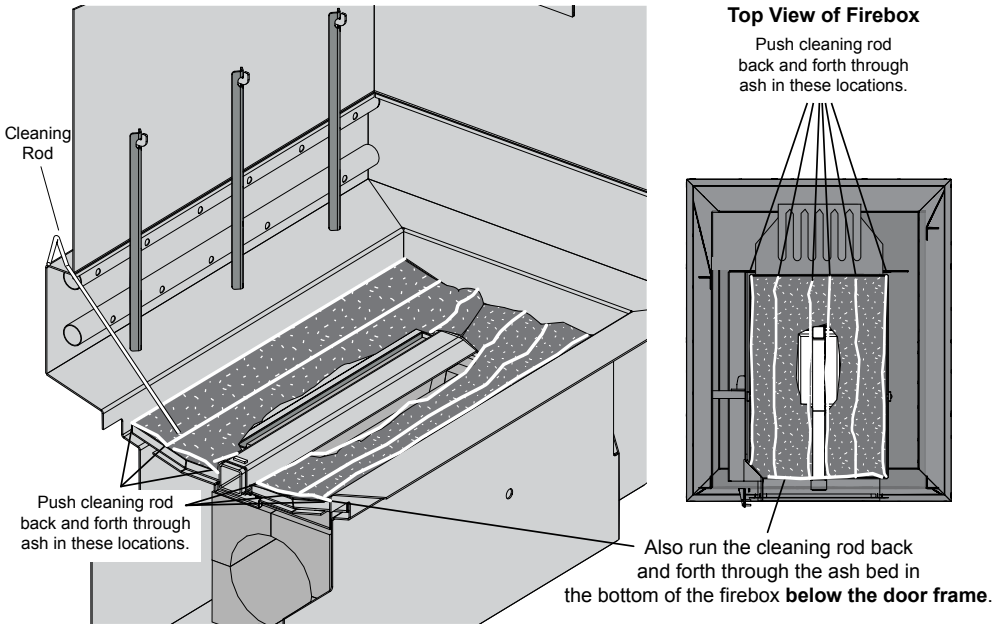

2. Unlatch the firebox door; then slightly open the firebox door and wait 10 seconds. Stay as far away as possible as the firebox door is opened because smoke and hot gases escaping through the firebox door opening could ignite. From a safe distance, observe the fuel load.

⚠ WARNING

Use extreme care when adding wood when wood or coals are already present. Very hot gases may be coming out of the firebox door opening.

OPERATING TIP

Run the cleaning rod through the coal bed every time before loading wood to help maintain proper air flow and optimize combustion.

3. Using the illustration as a reference, push the cleaning rod through the ash, coals and remaining wood in the bottom of the firebox to loosen it up, including a pass on each side of the air tube. **Be sure the area on each side of the charge tube is open.** Also run the rod through the ash bed back and forth in the bottom of the firebox below the door frame.

NOTE: Neglecting to push the cleaning rod through the ash and coals as described in Step 3 each time before wood is loaded can cause the ash bed to deepen and become compacted. This can result in poor heat output and combustion because of restricted airflow. Compacted ash will not fall into the Reaction Chamber; it will need to be removed with a shovel.

4. Some ash in the bottom of the firebox (but not alongside the charge tube) is necessary for the proper operation of the outdoor furnace. Ash acts as an insulator, keeping the glowing coals in the bottom of the firebox hot enough to restart the fire. When using the cleaning rod, some of the ash will fall into the Reaction Chamber and some ash with coals will remain. The coals remaining around the area alongside the air tube will create a clean, efficient burn.

NOTE: If wood supply is mostly shorter pieces (e.g., 14"-16" long), it may be necessary to load pieces end-to-end (see example below).

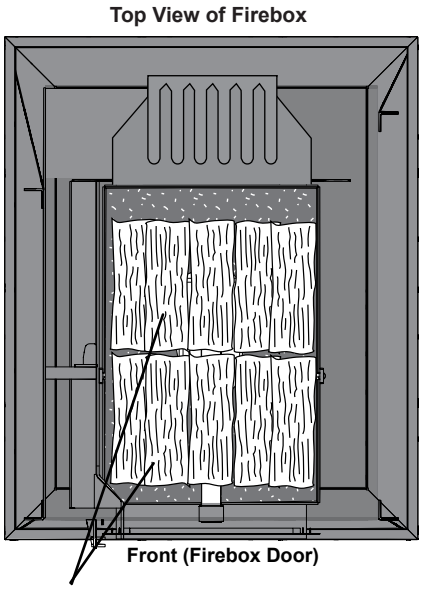

Load shorter wood pieces (14"-16") end-to-end

5. The combustion air inlets must be kept open and clear of ash and coals to allow the furnace to operate properly. If needed, remove enough ash to keep the combustion air inlets free of obstruction.

NOTE: It is important to understand that when the water temperature setpoint (185°F) is reached, the combustion air is shut off until the water temperature drops to the setpoint minus the differential setting. During this cycle-off time there will be no active fire in the firebox. If the firebox door is opened, the wood might begin to burn again but will be shut down when the door is closed if the water temperature is above the setpoint. If the door is opened and closed when the water temperature is below the setpoint the fan will cycle on again to achieve the setpoint even though the differential point has not been reached. If the combustion cycle is activated with the water temperature at least to the differential below setpoint and the fire is not actively burning when the door is closed, first confirm that proper operating and maintenance procedures are being performed before considering testing mechanical components.

6. When refilling the firebox, the new wood load will ignite quickly and burn more efficiently if these instructions are followed. This will prevent creosote buildup in the heat exchanger, air channels or primary elbow. The operating procedures will maintain good air flow and very efficient combustion.

DAILY

- Run the cleaning rod through the ash and coal bed and along both sides of the air tube as shown on previous page to keep ash loose. **Use care near the refractory.** This will allow excess ash to flow down into the Reaction Chamber. If the coal bed/remaining wood is more than 4 inches deep, it may be necessary to use the cleaning rod to open a passage through the coals on each side of the air tube. **Air flow down past the air tube is essential for a good combustion rate to be maintained. To confirm adequate air flow, cautiously open the Reaction Chamber door to visually identify the combustion air flow while the furnace is in a burn cycle with the fan on and the bypass closed.**

- To ensure the fire will maintain good combustion, it is important to refill the firebox when an adequate amount of the previous wood load is remaining (enough to provide enough heat and fire to dry and ignite the new wood load). If the coals burn out from under the new wood load and are unable to keep the fire going, there are not enough coals and wood left from the previous load. Enabling the Easy Refire mode will help keep part of the wood load for a quicker, more efficient fire up after reloading. Easy Refire is enabled as default setting on version 6.72 and later.

- Be sure to fill the firebox with enough wood so there is adequate wood left the next time you load to dry and ignite the new wood.

- Keep in mind that burning dry, well-seasoned wood requires less coals to ignite the new wood load.

- Burning higher moisture wood or larger, unsplit wood will require that a larger amount of the previous wood load remain in the firebox to adequately ignite the new wood load. If there are not an adequate amount of coals or enough of the previous wood load to achieve a good hot fire and efficient combustion with Reaction Chamber temperatures, open the bypass door for a long enough time to get the new wood load burning well; then close the bypass. Refer to Cold Start Firing.
- If the furnace is being used in the fall and spring or on heat loads much lower than the main heating season, use a 25% wood load or whatever amount will be needed for the period of time between normal reloading.

WEEKLY (or as needed)

- Clean the heat exchanger weekly (or as needed) to prevent air flow restriction. When the operating procedure outlined here is used, there will be no creosote formation in the Reaction Chamber or heat exchanger passage.
- Clean ash out of the Reaction Chamber channel as needed. It is best not to allow the Reaction Chamber to fill to a depth over 1/2 full.
- Inspect and clean the chimney tee as needed to prevent restriction.
- Clean and inspect the spark arrestor (if one is being used) as needed.
- Review the operation and maintenance, and refueling tips videos available on the Online Support Center.

NOTE: If the furnace has been operated without adequate airflow and efficient combustion, it may be necessary to inspect and clean the primary combustion air inlets, air channels, primary air elbow, heat exchanger, and Reaction Chamber.

NOTE: If the fire goes out or keeps going out, the pulse timer can be adjusted to a longer duration and shorter time periods between idle pulses.

⚠ WARNING

When adding wood to the firebox, be careful not to get pinched between the wood and the door frame or any part of the outdoor furnace. Use extreme care with large pieces of wood that may be difficult to handle.

7. Inspect the firebox for crusty deposits on the walls and in the corners and use the maintenance tool or similar type of tool to scrape and remove. Use the maintenance tool to remove any thick deposits from the inside front corners of the firebox, down each side and across the top, as shown.

8. Use the maintenance tool to keep the front combustion air inlets, and the combustion inlets on both air tubes free of any buildup.

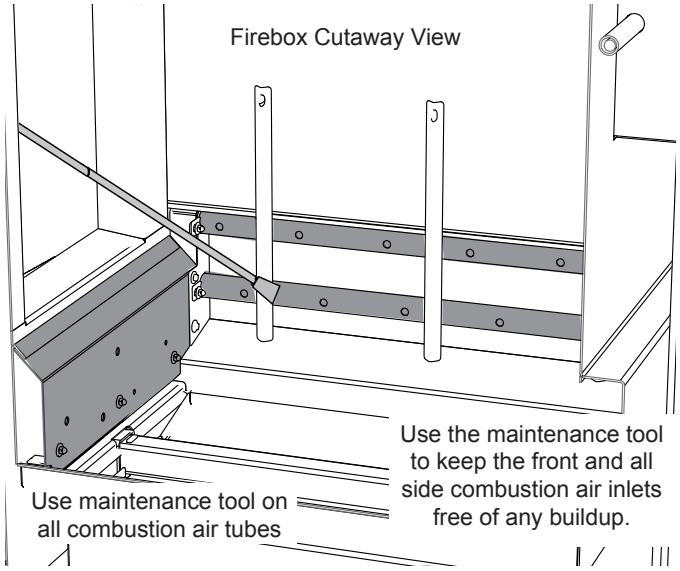

9. When loading, load the wood so that the combustion air inlets on the side of the firebox do not become blocked or restricted.

10. Close and latch the firebox door. **Do not use the firebox door to ram wood into the outdoor furnace. Do not operate the outdoor furnace with the firebox door open.** Combustion in the firebox cannot be controlled if the firebox door is left open or unlatched. If the firebox door is left open, an uncontrolled burn will result. To return to a controlled burn, close and latch the firebox door.

11. Wait for 15 seconds; then slowly pull the bypass door handle toward the front of the furnace and push down to close the bypass door.

⚠ WARNING

The firebox door must be closed and latched at all times except when filling the firebox with wood or damage to gaskets, paint, etc., may occur. Leaving the firebox door open may lead to a runaway fire. In the event of a runaway fire, close the firebox door.

Maintenance Schedule

PREVENTIVE MAINTENANCE SCHEDULE

Regular maintenance and inspections can help extend the life of your outdoor furnace and prevent high-cost repairs. This table is meant to serve as a general guideline until you become acquainted with how the outdoor furnace operates with your specific application.

OPERATION	SERVICE INTERVAL: Before first operation of season	Daily	Weekly	Monthly	Semi-Annually	Post Season	Other	See Section Number
Check water level.	●	●						1
Remove ash.			C			●		3
Scrape firebox door frame; use cleaning rod in ash.		A				●		8
Inspect firebox door seal.		A				●		4
Inspect and lubricate door latch bushings.						●	G	4
Inspect chimney and chimney tee.	●		●			●		5
Check vent cap.	●							2
Clean heat exchangers.	●		C			●	F	6
Inspect rear access heat exchanger door latches, seal and insulation							H	6
Inspect Reaction Chamber.	●		C			●		7
Inspect secondary air tube and refractory.						●		11
Inspect firebox and firebox ash area.	●	A				●		8
Inspect and clean combustion air inlets.	●		C			●	B	9
Inspect and clean the combustion fan and inlet screen.					D			10
Oil the combustion fan.						●		10
Check pH and moly levels of water.	●				D	●		E
Inspect primary and secondary combustion air elbows.						G		12
Grease bypass door handle.				F		●		13
Perform a complete cleaning.				F		●		14

NOTE: Check daily for build-up of creosote in the lower corners and around the air outlets until experience shows how often cleaning is necessary.

- A Daily, or as needed.
- B Twice a week.
- C Weekly until interval for your application can be determined.
- D When new, after three months, then every six months thereafter.
- E Refer to **Testing Treated Water in the Outdoor Furnace** (Installation and Initial Water Treatment Guide).
- F Frequency will vary depending on heat load requirements, type of wood used and the moisture content of the wood.
- G Or as needed.
- H Whenever rear access heat exchanger door is opened.

Control Locations

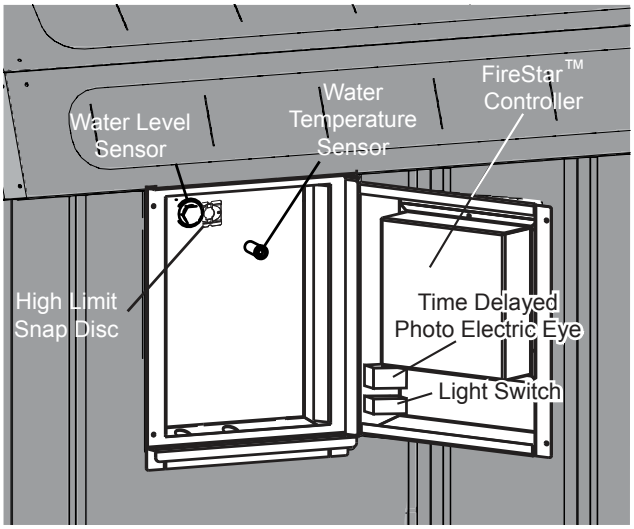

ROUTINE MAINTENANCE

⚠ CAUTION

Use only genuine WoodMaster Parts and Accessories if it ever becomes necessary to replace any component of the outdoor furnace.

Routine inspections and maintenance are essential to the proper operation and longevity of the outdoor furnace. The items indicated in the preventive maintenance schedule are intended to serve as a guideline. Actual intervals between inspections and maintenance may vary depending on a number of factors, including your heat load requirements, type of wood used, and outdoor temperatures.

NOTE: Proper maintenance of the firebox, Reaction Chamber, Fusion Combustor, heat exchanger, chimney transition box and chimney tee are essential for the outdoor furnace to function properly and for longevity.

⚠ CAUTION

Do not burn plastic, garbage, treated wood or fuels not listed for this outdoor furnace.

NOTE: Chloride or sulfurous gases can be generated if plastic or rubber is burned and will mix with the moisture from the wood to form hydrochloric or sulfuric acids in the firebox, creating corrosion.

Creosote - Formation and Need for Removal. When wood is burned slowly, it produces tar and other organic vapors, which combine with expelled moisture to form creosote. The creosote vapors condense in the relatively cool chimney flue of a slow-burning fire. As a result, creosote residue accumulates on the flue lining. When ignited this creosote makes an extremely hot fire.

NOTE: If the outdoor furnace is operated correctly, creosote will not form in the chimney.

The chimney connector and chimney should be inspected at least twice monthly during the heating season to determine if a creosote buildup has occurred, and to check for corrosion or condensation. If creosote has accumulated it should be removed to reduce the risk of a chimney fire.

⚠ WARNING

The chimney and chimney connector must be clean and in good condition.

MAINTENANCE SECTIONS

Refer to the Preventive Maintenance Schedule for the recommended intervals with which to perform these maintenance items.

Section 1 - Water Level

Open the sight gauge valve. The sight gauge tube will fill to indicate the level of water in the outdoor furnace. Be sure to close the sight gauge valve after checking water level. The sight gauge valve and tube will drain when the valve is closed.

Section 2 - Vent Cap

Check that the vent cap fits loosely on the vent opening. Check the vent cap copper tube for obstruction; clean with a pipe cleaner if needed.

⚠ WARNING

The outdoor furnace vent cap must fit loosely on the vent opening. Do not force the cap down or try to seal it tightly onto the vent pipe. Do not extend or restrict the vent pipe or opening. DO NOT ALLOW THE OUTDOOR FURNACE TO BE PRESSURIZED.

Section 3 - Ash

Refer to the Adding Wood section.

Section 4 - Firebox Door Seal and Bushings

Make sure the firebox door is properly latched and check the condition of the firebox door seal. If it is not sealing properly (indicated by a uniform indentation), replace the seal. If it is not sealing properly after replacing the seal, the firebox door may need to be adjusted. See Firebox Door Hinge/ Latch Bearing Adjustment in Serviceable Items section.

Section 5 - Chimney Tee and Chimney

Remove the band clamp and chimney inspection cover. Inspect the chimney outlet and chimney for excessive creosote, ash or deposits and clean as necessary.

NOTE: The chimney inspection cover must fit tightly. Check and clean if necessary the groove for the cover to prevent air from leaking out. Leaking air caused by an improperly fitting cover can cause corrosion.

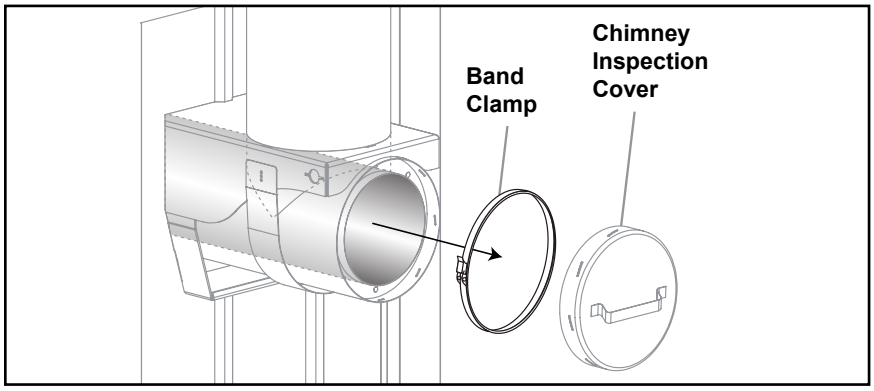

Section 6 - Heat Exchangers

NOTE: Inspect the heat exchangers weekly, and clean as needed, until the interval for your application can be determined. Frequency will vary depending on a number of factors including heat load requirements, type of wood used and the moisture content of the wood.

NOTE: The best time to clean the heat exchangers is prior to loading with wood when all that remains in the firebox is a glowing coal bed.

1. Press the **Power** ⏻ button on the FireStar combustion controller to turn it off.

⚠ CAUTION

Be sure to turn off the FireStar combustion controller before doing this procedure.

2. Remove the chimney inspection cover. Inspect the area above the heat exchangers for any excessive ash buildup. Clean and remove any excessive ash accumulation.

3. Remove the heat exchanger access cover from the back of the furnace. Inspect the cover insulation and repair/replace as necessary.

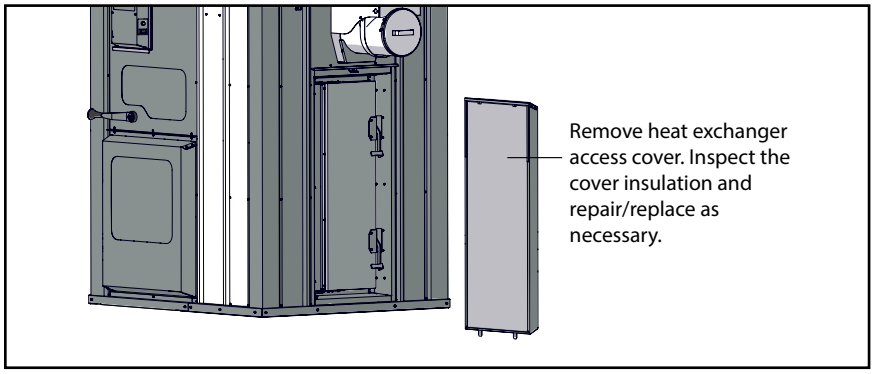

4. Carefully undo both latches on the hinged heat exchanger door. If any coals or wood remain in the firebox, slowly open the door making sure to stand off to the side when opening it.

⚠ CAUTION

Open the heat exchanger door slowly and stand off to the side when opening it.

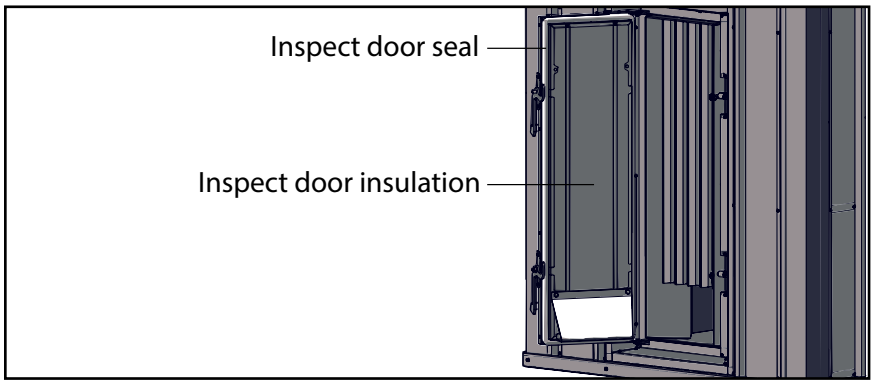

5. Inspect the door insulation and door seal. Repair/replace any defective seal or insulation.

6. Inspect the door frame edge for any buildup of creosote or ash. Use the maintenance tool to clean the door edges.

⚠ CAUTION

Always wear the appropriate personal protective gear when cleaning ash from the turbulators and the Reaction Chamber.

7. Remove each turbulator by gently pulling down and out. Clean each turbulator to remove any ash or buildup; then inspect for damage.

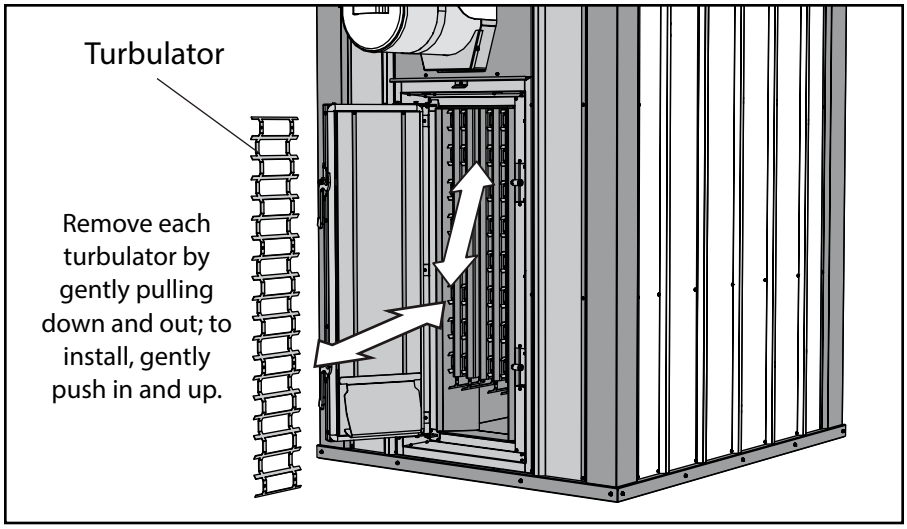

8. Inspect the heat exchangers for excessive buildup of creosote or ash. Use the scraping end of the maintenance tool to clean any accumulations from the sides of the heat exchanger sections. Angle the cleaning rod up to clean from the top of the exchangers and then down to the bottom between each folder of the exchanger.

NOTE: If there is creosote buildup in the heat exchanger, it is caused by operating the furnace incorrectly. It is important to follow the recommended operation and maintenance procedures (see Operating Instructions).

The Flue Brush Kit (p/n 390) is an excellent option as an additional way to clean the exchangers.

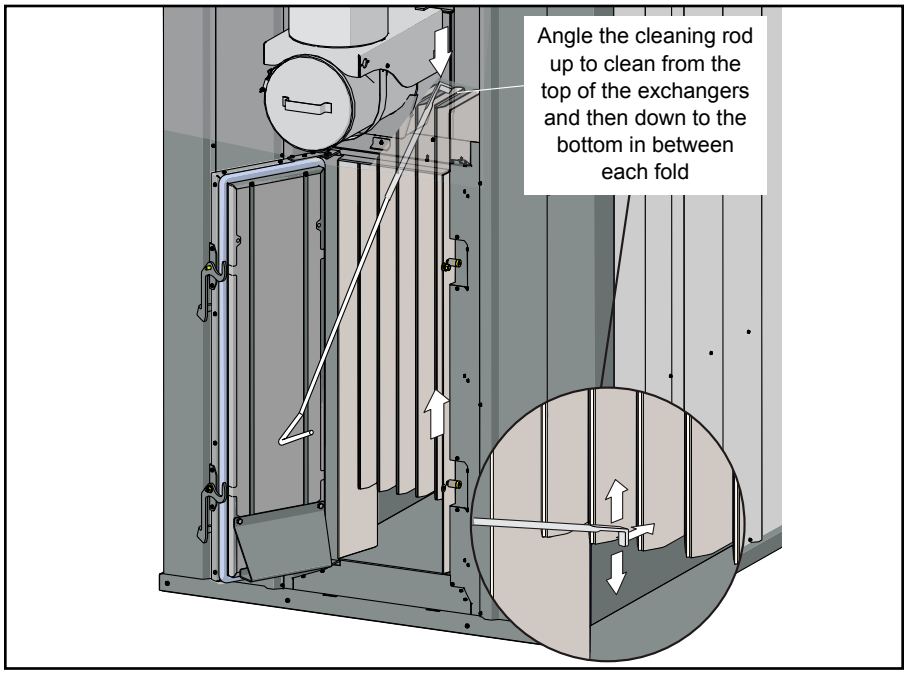

9. Using the maintenance tool and a shovel, clean any accumulated ash from beneath the heat exchanger. Dispose of ash properly.

10. Ensure that the door seal and frame are still clean of any debris or ash; then install each turbulator by gently pushing in and up.
11. Close and latch the heat exchanger door; then install the heat exchanger access cover and chimney inspection cover.
12. Press the **Power** ⏻ button on the FireStar combustion controller to turn it on.

Section 7 - Reaction Chamber

1. Press the **Power** ⏻ button on the FireStar combustion controller to turn it off.

⚠ CAUTION

Be sure to turn off the FireStar combustion controller before doing this procedure.

2. Unlatch and open the Reaction Chamber door.
3. Use the maintenance tool to pull the ash to the front of the furnace. Take care when pulling ash from each side of the Combustor not to move the refractory sections.
4. Use a small shovel to remove all of the ash and deposits from the Reaction Chamber. Take care not to damage the temperature sensor. You can also clean ash from the back of the furnace by opening the heat exchanger door.

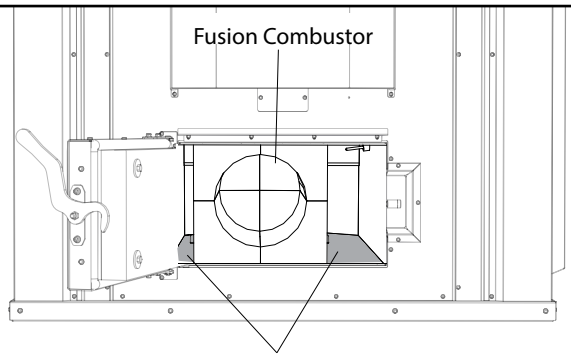

Carefully pull ash to the front of the Reaction Chamber on each side of the Fusion Combustor using the maintenance tool; then remove with small shovel.

NOTE: It is extremely important to clean ash from the entire Reaction Chamber area. If necessary, refer to section Heat Exchangers section for the procedure for removing ash from heat exchanger area.

⚠ CAUTION

Take care not to damage the temperature sensor when removing ash.

If needed, clean ash from the back of the furnace by opening the heat exchanger door.

5. Close the Reaction Chamber door and secure the latch.
6. Press the **Power** ⏻ button on the FireStar combustion controller to turn it on.

Section 8 - Firebox

⚠ WARNING

Remove all wood, coals and ash from the firebox.

1. Scrape the top and sides of the firebox and around the door frame area to remove any deposits; then inspect the surfaces of the firebox for any signs of corrosion, paying particular attention to the ash level and below.

NOTE: When scraping to clean inside the firebox, be sure to pay particular attention to the corners and to the seams.

2. If signs of corrosion are present, contact your dealer. Refer to the section Corrosion is Present in the Troubleshooting section.
3. A thin, tar-like creosote layer may form on the firebox walls and migrate toward the bottom of the firebox where it could collect into a thicker layer. Normally this layer will burn up as it collects on the bottom. If it migrates to the bottom of the firebox and does not burn up, it must be removed. Do not allow it to cover or restrict air flow through the combustion air inlets or bottom of the firebox. If larger, thick, dry deposits form on the walls in the firebox, they should be removed with the maintenance tool.

NOTE: Be aware that the hotter the fire, the less creosote is deposited, so weekly cleaning may be necessary in mild weather, even though monthly cleaning may be enough in coldest months.

Section 9 - Combustion Air Tubes

NOTE: If the combustion air tubes are becoming restricted by ash or creosote, it is caused by operating the furnace incorrectly. It is important to follow the recommended operation and maintenance procedures (see Adding Wood section).

Primary combustion air is supplied to the firebox through the combustion air inlets located in the front air channel and in the side combustion air tubes. Be sure to clean off any buildup around the combustion air tube holes and buildup that may collect around the combustion air tubes themselves.

The side combustion air tubes can be removed if necessary. To remove, lift the end of the tube closest to the back of the firebox up off of the retaining pin, then in and toward the back of the firebox. Install by reversing this procedure.

NOTE: If there is a large amount of buildup on the exterior of the combustion air tube, it may be necessary to first remove the buildup to make removal easier.

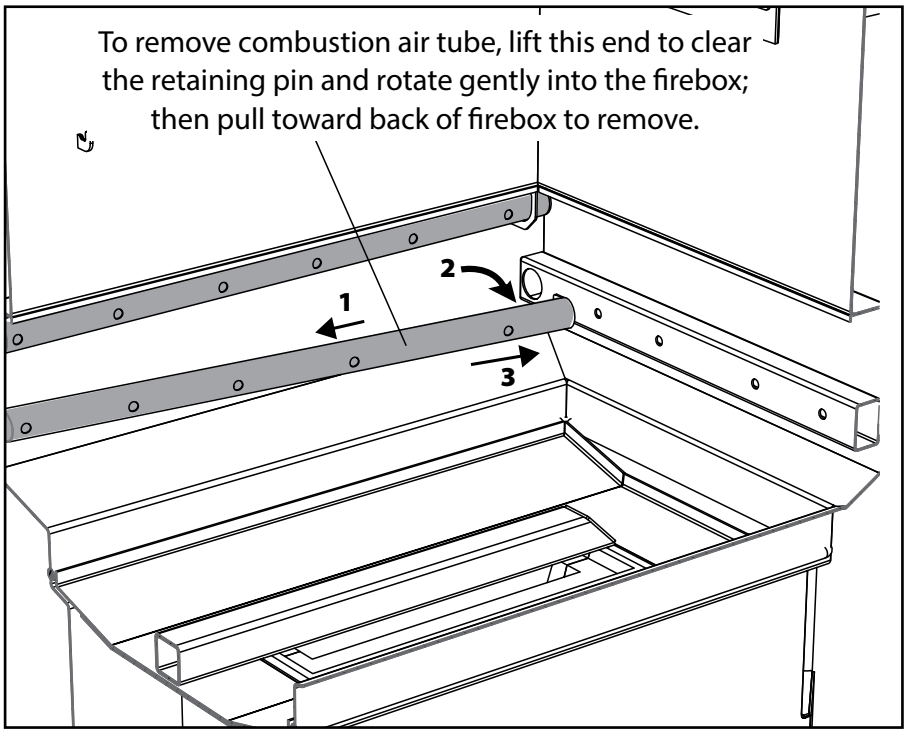

Section 10 - Combustion Air Fan

1. Disconnect power to the outdoor furnace.

⚠ WARNING

Do not proceed without testing that power is disconnected.

2. Remove the airbox access cover; then open the hinged airbox door. Inspect the combustion air fan inlet screen and fan wheel and clean if necessary. Make sure the air intake is clean and not obstructed.

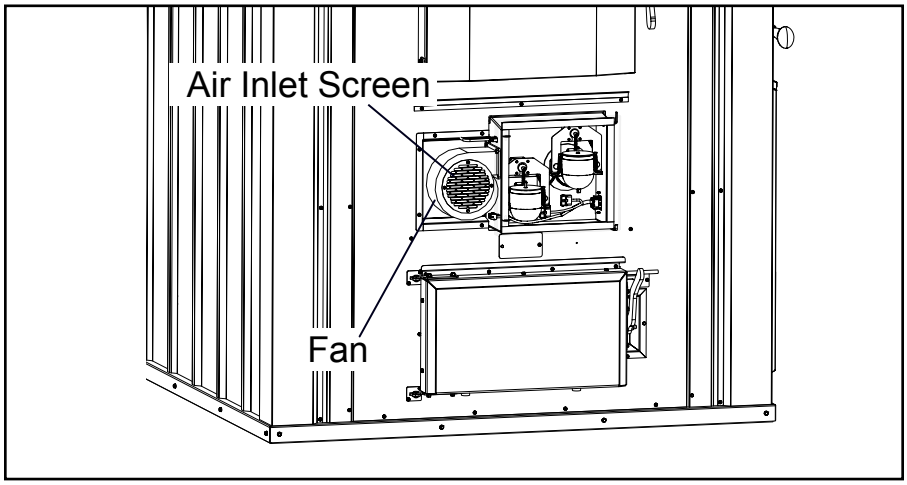

3. Close and secure the airbox door. Install the airbox access cover.

⚠ DANGER

Do not connect power or operate the outdoor furnace with the airbox access cover removed. The outer airbox cover must be installed and secured with screws.

Section 11 - Air Tube and Refractory

Removing and inspecting the air tube and inspecting the refractory is best done after the outdoor furnace has been shut down and the firebox has been cleaned according to the Complete Firebox Cleaning Procedures.

NOTE: The air tube and refractory are wear items.

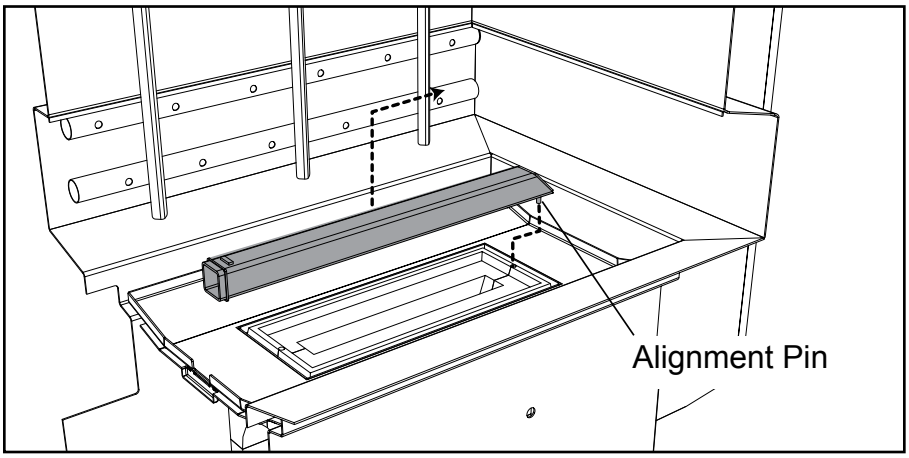

1. Remove the air tube by lifting and then sliding it toward the rear of the outdoor furnace. Inspect the area beneath the air tube to see the area is not plugged.
2. Inspect each refractory module for damage. Small cracks and chips in the refractory are normal. If large pieces of the refractory modules are missing, contact your WoodMaster dealer.
3. Install the air tube making sure the alignment pin is seated in the alignment hole in the refractory modules.

Section 12 - Primary Air Elbow

1. Disconnect the electrical power to the outdoor furnace at the main power source.

⚠ WARNING

Do not proceed without testing that power is disconnected. Make sure the power cannot be reconnected while servicing the actuator motors (i.e., use lock out, tag out).

2. Remove the outer airbox cover; then open the airbox door.
3. Disconnect the actuator motor wiring harness.
4. Loosen the hose clamp securing the primary air elbow to the air tube; then remove the assembly from the airbox.

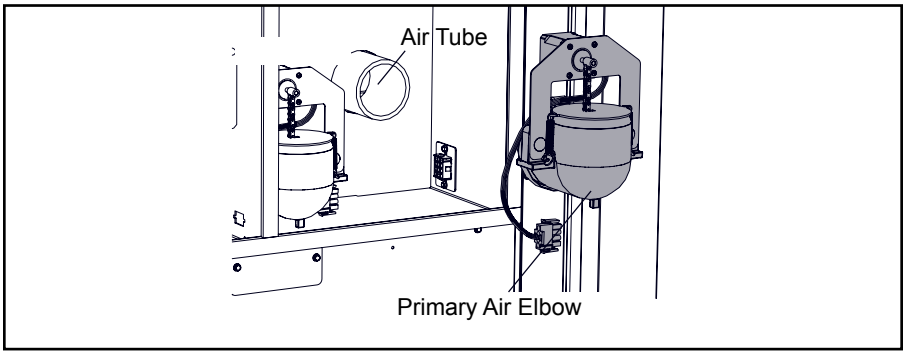

5. Inspect the elbow and clean out any build-up or blockage.

NOTE: A small amount of material in the elbow is normal and is not an indication of improper operation.

NOTE: If there is creosote buildup in the primary air elbow, it is caused by operating the furnace incorrectly. It is important to follow the recommended operation and maintenance procedures (see Adding Wood section).

6. Inspect the air tube for blockage or obstructions. To remove blockage or obstructions in the air tube, a screwdriver and a shop vac may be useful.
7. Install the primary air elbow over the air tube; then tighten the hose clamp.
8. Connect the actuator motor wiring harness.
9. Close and secure the airbox door. Install the outer airbox cover and secure with screws.

⚠ DANGER

Do not connect power or operate the outdoor furnace with the outer airbox cover removed. The outer airbox cover must be installed and secured with screws.

10. Connect the electrical power to the outdoor furnace at the main power source.

Section 13 - Bypass Handle (if applicable)

1. Using the grease zerk on the bypass handle, add grease.

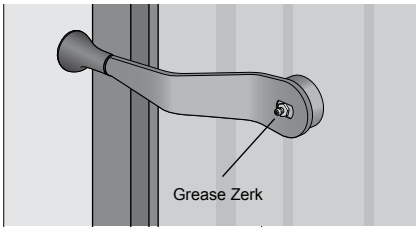

2. Lift and lower the bypass handle several times to distribute the grease.

Section 14 - Complete Cleaning Procedures

The frequency for performing a complete cleaning will vary depending on a number of factors, including your heat load requirements, type of wood used, and the moisture of the wood.

NOTE: Proper maintenance of the firebox, Reaction Chamber, heat exchanger, chimney transition box and chimney tee are essential for the outdoor furnace to function properly and for longevity.

NOTE: It may be best to allow the wood and coals to burn out completely before this type of cleaning.

⚠ CAUTION

Always wear the appropriate personal protective gear (e.g., protective gloves, clothes, dust mask, etc.) when cleaning ash from the firebox and the Reaction Chamber, etc.

⚠ CAUTION

Clear the entire area surrounding the outdoor furnace of any combustible materials before performing these cleaning procedures.

⚠ WARNING

Be careful not to spill any coals or ash. Place coals and ash in a metal container with a tight-fitting metal lid.

NOTE: Refer to the illustration and clean the areas identified in the order shown. For each area in the illustration, refer to the corresponding maintenance section.

1. Press the **Power** ⏻ button to turn the FireStar combustion controller off.

⚠ CAUTION

Be sure to turn off the FireStar combustion controller before doing this procedure.

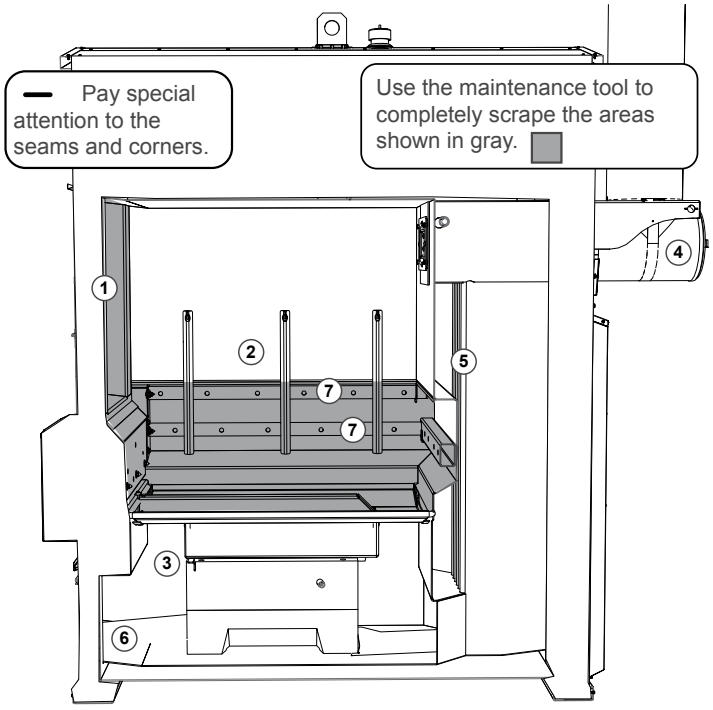

Clean ash and deposits from the areas identified in the order shown. Refer to the corresponding maintenance sections for detailed procedures.

(1) Door Frame (2) Firebox (3) Reaction Chamber (4) Chimney Tee
(5) Heat Exchangers (6) Reaction Chamber
(7) Combustion Air Outlets

Door Frame

Open the firebox door; then scrape the face and surface area of the door frame to remove any deposits.

Firebox

See Maintenance Section 8 - Firebox.

Chimney Tee

See Maintenance Section 3 - Chimney Tee.

Heat Exchangers

See Maintenance Section 6 - Heat Exchangers.

Reaction Chamber

See Maintenance Section 7 - Reaction Chamber.

Combustion Air Tubes / Air Tube

See Maintenance Section 9 - Combustion Air Tubes and Maintenance Section 11 - Air Tube and Refractory.

SERVICEABLE ITEMS

NOTE: These procedures should be performed by a qualified individual and in accordance with any and all federal, state/provincial and local codes and regulations. When performing work on an appliance observe all precautions in the literature, tags and labels attached to the appliance and other safety precautions that may apply. When working with electricity and electrical components, failure to follow precautions could result in property damage, personal injury or death.

NOTE: If any of these items are under warranty, remember that the warranty covers only the cost of the replacement part. Labor is not covered.

NOTE: Use only genuine WoodMaster parts and accessories if it ever becomes necessary to replace any component on the outdoor furnace.

FIREBOX DOOR HINGE / LATCH BEARING ADJUSTMENT

If the firebox door seal has been replaced and it is not sealing properly, the firebox door may need to be adjusted to close more tightly. When adjusting the firebox door, make sure it is not adjusted too tightly as damage to the firebox door, frame or door seal may result.

11. To tighten the hinges, loosen the outer adjustment nut and turn the inner nut counter-clockwise; then tighten the outer adjustment nut securely. Adjust the top and bottom hinge for equal pressure when the door is latched.

2. To tighten the latch bearing, loosen the latch adjustment nut; then tap the latch bearing assembly in toward the firebox. Tighten the latch adjustment nut securely.

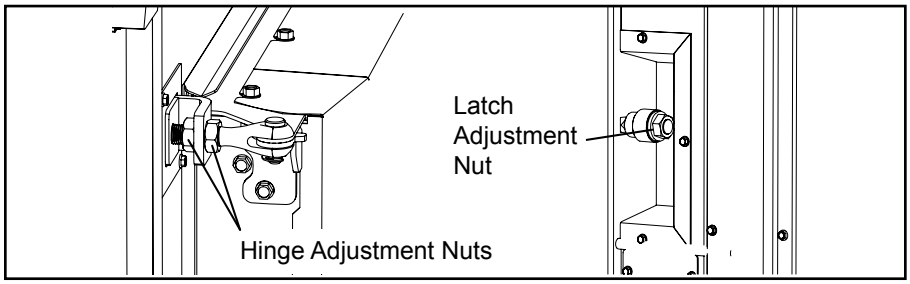

FIREBOX DOOR SEAL

The firebox door seal must be in good condition to ensure an airtight seal. If the outdoor furnace is operated with the door open or ajar, the firebox door seal may become damaged or brittle due to excessive temperatures. If replacement is necessary, use the following procedure:

⚠ WARNING

Remove all wood, coals and ash from the firebox.

1. Disconnect power to the outdoor furnace.

⚠ WARNING

Do not proceed without testing that power is disconnected. Make sure the power cannot be reconnected while testing components (i.e., use lock out, tag out).

2. Using a scraper, remove the firebox door seal on the inner side of the firebox door and clean any remaining silicone adhesive from the groove. Any residue left in the groove will interfere with the new door seal.

3. Apply a liberal amount of silicone sealant into the entire firebox door seal groove.

4. Starting at the center of the hinge side of the firebox door, insert the new door seal into the groove, pressing it firmly into the bead of silicone sealant. Make sure the seal is not stretched as it is pressed into the corners. Force the seal out to fill in the corners as shown.

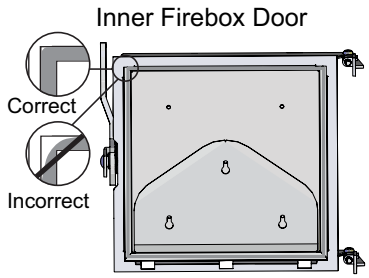

5. Scrape the face and surface area of the door frame to remove any deposits.

6. Close the firebox door. Make sure that pressure is felt as the latch is closed to ensure the seal is tight with the door frame.

7. Open the firebox door and check that there is an impression in the seal from the door frame. This mark must extend, with no gaps, around the entire perimeter of the firebox door seal. If needed, adjust the hinges and latch assembly.

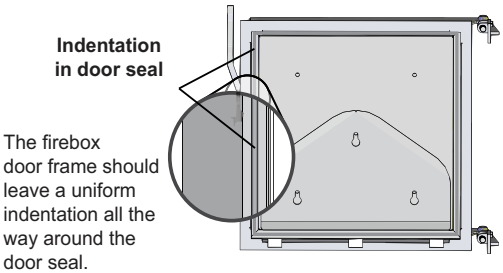

⚠ CAUTION

The firebox door seal will be damaged or destroyed if it is not installed properly.

REACTION CHAMBER DOOR SEAL

The Reaction Chamber door seal must be in good condition to ensure an airtight seal. If replacement is necessary due to the Reaction Chamber door seal becoming damaged or brittle, use the following procedure:

1. Disconnect power to the furnace.
2. Unlatch and open the Reaction Chamber door.
3. Use the maintenance tool to pull the ash to the front of the furnace; then use a small shovel to remove all of the ash and deposits from the Reaction Chamber. Take care not to damage the temperature sensor.

⚠ WARNING

Remove all ash from the Reaction Chamber.

4. Using a scraper, remove the Reaction Chamber door seal rope and clean any remaining silicone adhesive from the groove. Any residue left in the groove will interfere with the new seal.
5. Apply a liberal amount of silicone sealant into the entire Reaction Chamber door seal groove.
6. Starting at the center of the hinge side of the Reaction Chamber door, insert the new door seal rope into the groove, pressing it firmly into the bead of silicone sealant. Make sure the Reaction Chamber door seal rope is not stretched as it is pressed into the corners. Force the Reaction Chamber door seal rope out to fill in the corners as shown.

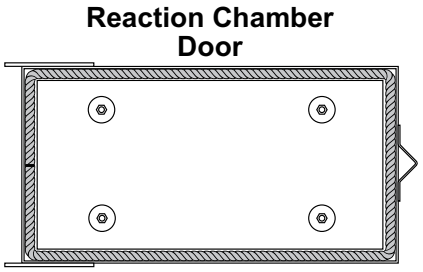

7. When the seal has been pressed into the groove all the way around the Reaction Chamber door, cut the end of the rope about one inch longer than required and press it tightly against the beginning end of the rope.
8. Close the Reaction Chamber door and secure the latch.

Heat Exchanger Door Seal Rope

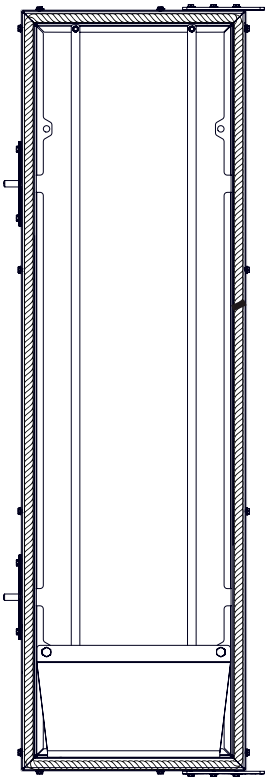

HEAT EXCHANGER DOOR SEAL

The heat exchanger door seal must be in good condition to ensure an airtight seal. If replacement is necessary due to the door seal becoming damaged or brittle, use the following procedure:

1. Press the **Power** ⏻ button on the FireStar combustion controller to turn it off.

⚠ CAUTION

Be sure to turn off the FireStar combustion controller before doing this procedure.

2. Remove the heat exchanger access cover from the back of the furnace.
3. Carefully undo both latches on the heat exchanger door; then slowly open the door making sure to stand clear of the opening.

⚠ CAUTION

Open the heat exchanger door slowly and stand off to the side when opening it.

4. Using a scraper, remove the heat exchanger door seal rope and clean any remaining silicone adhesive from the groove. Any residue left in the groove will interfere with the new seal.
5. Apply a liberal amount of silicone sealant into the entire heat exchanger door seal groove.
6. Starting at the center of the hinge side of the heat exchanger door, insert the new door seal rope into the groove, pressing it firmly into the bead of silicone sealant. Make sure the door seal rope is not stretched as it is pressed into the corners. Force the door seal rope out to fill in the corners as shown.
7. When the seal has been pressed into the groove all the way around the heat exchanger door, cut the end of the rope about one inch longer than required and press it tightly against the beginning end of the rope.
8. Close the heat exchanger door and secure with latches. Install and secure the heat exchanger access cover.

CIRCUIT BREAKER

The circuit breaker is located in the pump access area and also serves as the furnace disconnect. If the circuit breaker trips (turns off), reset it by turning it on. If the circuit breaker continues to trip, a component may be faulty. It is possible to isolate a faulty component using the following procedure.

1. Disconnect power to the outdoor furnace.

⚠ WARNING

Do not proceed without testing that power is disconnected. Make sure the power cannot be reconnected while testing components (i.e., use lock out, tag out).

2. Remove the airbox access cover; then open the airbox door.
3. Disconnect the actuator motor harness and disconnect the fan harness.
4. To test for a faulty component, connect one component at a time (e.g., start with one of the actuator motors); then connect power to the outdoor furnace. If the circuit breaker trips, the component is likely faulty. If not, disconnect power to the outdoor furnace and repeat the procedure until all components have been tested.

⚠ CAUTION

Disconnect power to the outdoor furnace before disconnecting a component and before connecting a component.

5. Close and secure the airbox door. Install the airbox access cover.

⚠ DANGER

Do not connect power or operate the outdoor furnace with the outer airbox cover removed. The outer airbox cover must be installed and secured with screws.

AIRBOX SEAL

Replace the airbox seal if it becomes damaged or worn to maintain proper operation of the furnace. See your WoodMaster dealer for replacement seals.

NOTE: It is best to replace the entire seal. Over time, the seal will compress, and replacing it in sections may result in the old sections not sealing completely against the airbox door.

1. Disconnect power to the outdoor furnace.

⚠ WARNING

Do not proceed without testing that power is disconnected. Make sure the power cannot be reconnected while replacing the airbox seal.

2. Remove the airbox access cover; then open the airbox door. Using a scraper or similar tool, scrape off the existing seal from the airbox.
3. Clean off any remaining adhesive residue with alcohol or a suitable solvent.
4. Measure and cut replacement seal.

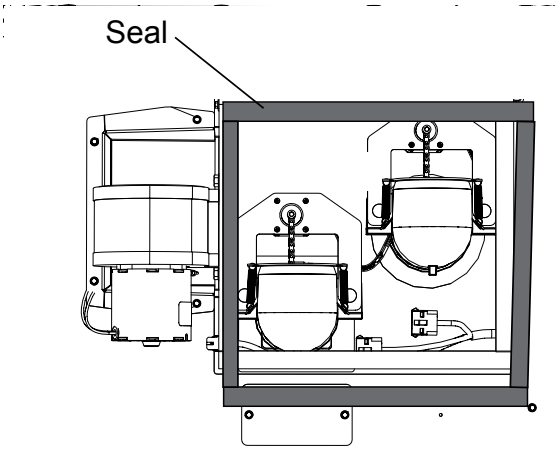

5. Remove the adhesive backing from the replacement seal and carefully apply the seal to the airbox as shown, making sure there are no gaps.
6. Close the airbox door and turn the furnace back on.
7. After the fan has started, use your hand to feel around the edges of the airbox door to check for leaks. A little air leakage, especially around the latches, is normal. If an excessive amount of air is felt, turn off the furnace; then check and repair/replace the seal if necessary.
8. Install the airbox access cover.

AIR TUBE AND REFRACTORY MODULES

⚠ WARNING

Remove all wood, coals and ash from the firebox and allow the firebox to cool thoroughly before replacing the air tube and/or refractory.

Air Tube and Refractory Removal Procedure

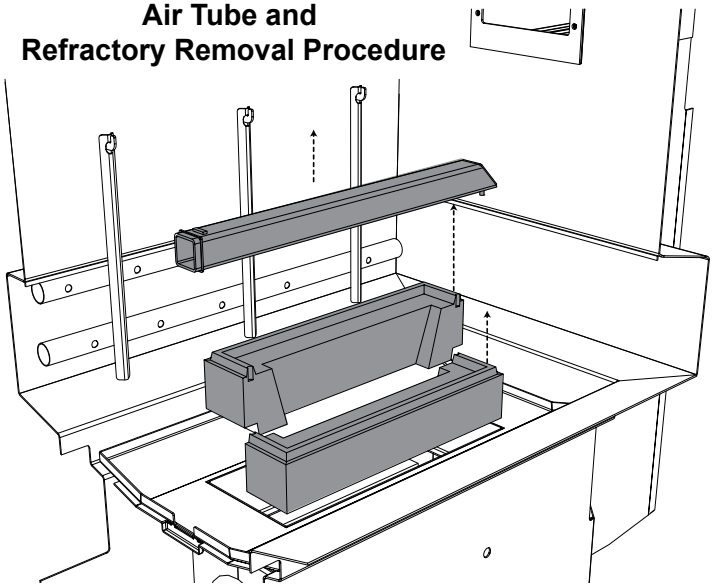

1. Remove the air tube by lifting it up and sliding it toward the back of the outdoor furnace.
2. Remove the rope gasket; then remove the existing refractory modules.
3. Ensure the area where the new refractory modules will be installed is clean and free of all debris. Install the new refractory modules; then install a new rope gasket on top of the refractory modules.
4. Install the new air tube by placing it in the opening at the front of the outdoor furnace as shown; then pull it toward the front of the outdoor furnace to secure it in place making sure the alignment pin fits into the alignment hole in the refractory modules.

THERMOCOUPLE

1. Disconnect power to the outdoor furnace.

⚠ WARNING

Do not proceed without testing that power is disconnected. Make sure the power cannot be reconnected while replacing the thermocouple.

2. Remove the pump access cover.
3. Disconnect the thermocouple connector; then remove the mastic tape from the thermocouple.
4. Remove the thermocouple.
5. Install the new thermocouple until the stop collar contacts the thermocouple tube.

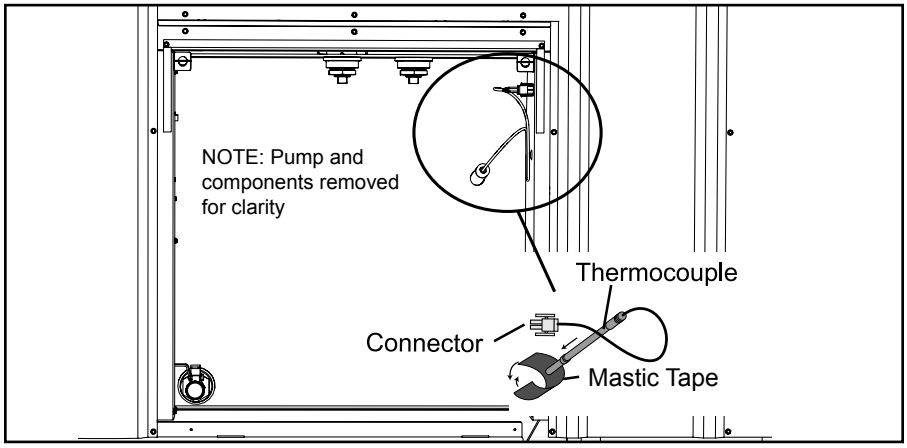

6. Secure the thermocouple with the mastic tape; then connect the thermocouple connector.
7. Install the pump access cover; then connect power to the furnace.

HEAT EXCHANGER DOOR INSULATION

NOTE: Insulation for the heat exchanger door is not standard fiberglass insulation. Use only the correct insulation when replacing or damage could occur. Contact your WoodMaster dealer for replacement insulation.

1. Press the **Power** ⏻ button on the FireStar combustion controller to turn it off.
2. Remove all wood, coals and ash from the firebox and allow the firebox to cool thoroughly.

⚠ WARNING

Remove all wood, coals and ash from the firebox and allow the firebox to cool thoroughly before replacing the heat exchanger door insulation.

3. Remove the heat exchanger access cover from the back of the furnace.
4. Carefully undo both latches on the heat exchanger door; then slowly open the door making sure to stand clear of the opening.

⚠ CAUTION

Open the heat exchanger door slowly and stand off to the side when opening it.

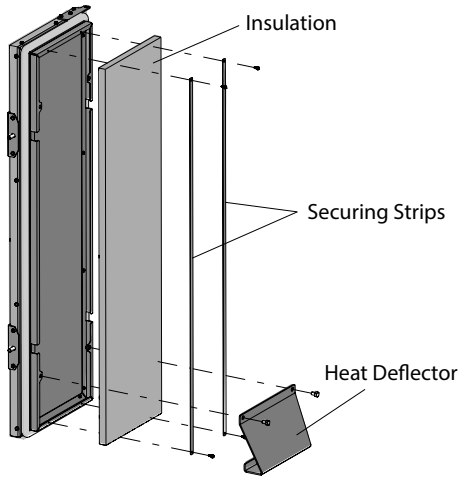

5. Swing the door open far enough to gain access to the inside of the door.
6. Wearing proper protective gear, use a brush or small broom to clean off any accumulated ash from the inside of the door.

7. Remove the heat deflector from the bottom of the door.
8. Remove the hardware and securing strips.
9. Carefully remove the insulation paying close attention to how the insulation is installed in the door and tucked into the edges of the door. This will aid in installation of the new insulation.
10. Before installing the new insulation, place it over the opening to make sure it is the correct size.
11. Place the new insulation inside the heat exchanger door with the reflective side facing out (toward you). Be careful not to tear the reflective material. Ensure that the edges of the new insulation are tucked into the edges of the door.
12. Install the securing strips. It may be necessary to adjust the insulation being careful not to tear it, after the securing strips are installed.
13. Install the heat deflector.
14. Check the insulation again to ensure that it is properly secured and attached to the inside of the heat exchanger door.
15. Carefully close and latch the heat exchanger door.

NOTE: The first few times the heat exchanger door is opened and closed after installing new insulation, it could seem more difficult to secure the latches. This is normal and once the insulation settles, securing the latches will be easier.

16. Install the heat exchanger access cover.

HEAT EXCHANGER ACCESS COVER INSULATION

NOTE: Be sure to check the temperature range for the spray adhesive. It may be necessary to replace the heat exchanger access cover insulation indoors to allow it to cure properly.

1. Remove the heat exchanger access cover from the back of the furnace.
2. Lay the cover on a piece of cardboard on a flat surface; then, wearing proper protective equipment, use a scraper to remove the insulation and any adhesive from the cover.
3. Test fit the new piece of insulation.
4. Using a good quality spray adhesive, follow the instructions on the can and apply the necessary amount to the inside of the cover.
5. Install the insulation in the cover, pressing down in multiple spots to ensure complete contact with the adhesive. Make sure the insulation is tucked all the way into the top of the cover.
6. Leave the cover on the flat surface until the adhesive cures according the adhesive manufacturer's instructions.

7. After the adhesive has cured, check to ensure the insulation has properly bonded to the cover; then install the heat exchanger access cover on the furnace.

COMBUSTION AIR TUBE / FRONT AIR CHANNEL

Press the **Power** ⏻ button on the FireStar combustion controller to turn it off.

⚠ CAUTION

Be sure to turn off the FireStar combustion controller before doing this procedure.

⚠ WARNING

Remove all wood, coals and ash from the firebox and allow the firebox to cool thoroughly before working inside the firebox.

Combustion Air Tube

1. Lift the end of the tube closest to the back of the firebox up off of the retaining pin, then in and toward the back of the firebox. Install by reversing this procedure.

NOTE: If there is a large amount of buildup on the exterior of the combustion air tube, it may be necessary to first remove the buildup to make removal easier.

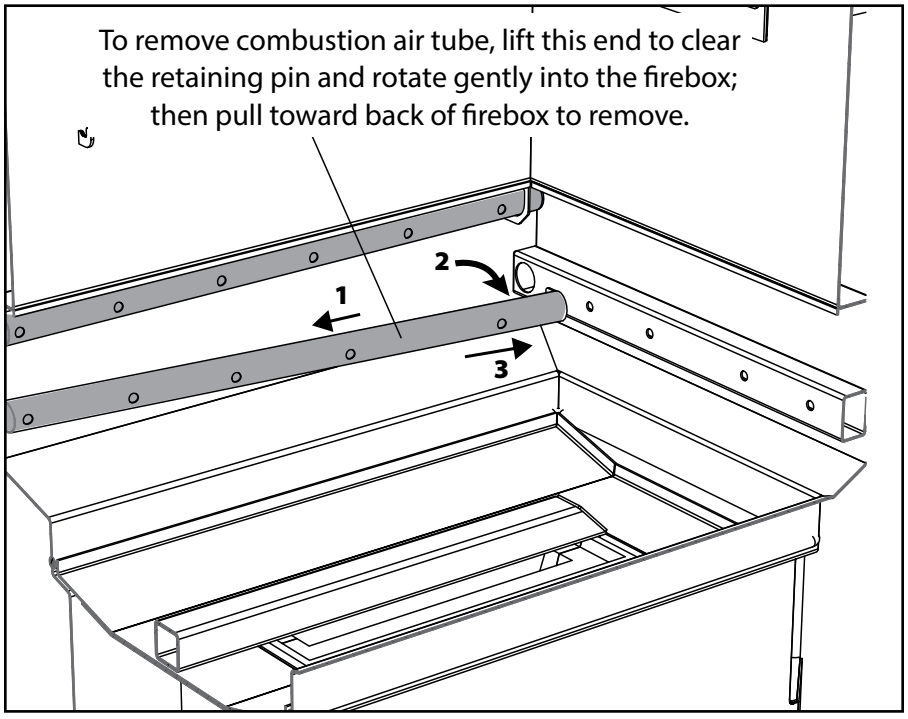

Front Air Channel

1. Remove the acorn nuts securing the front air channel and remove. Remove any ash or deposits from behind the air channel in the wall of the firebox.

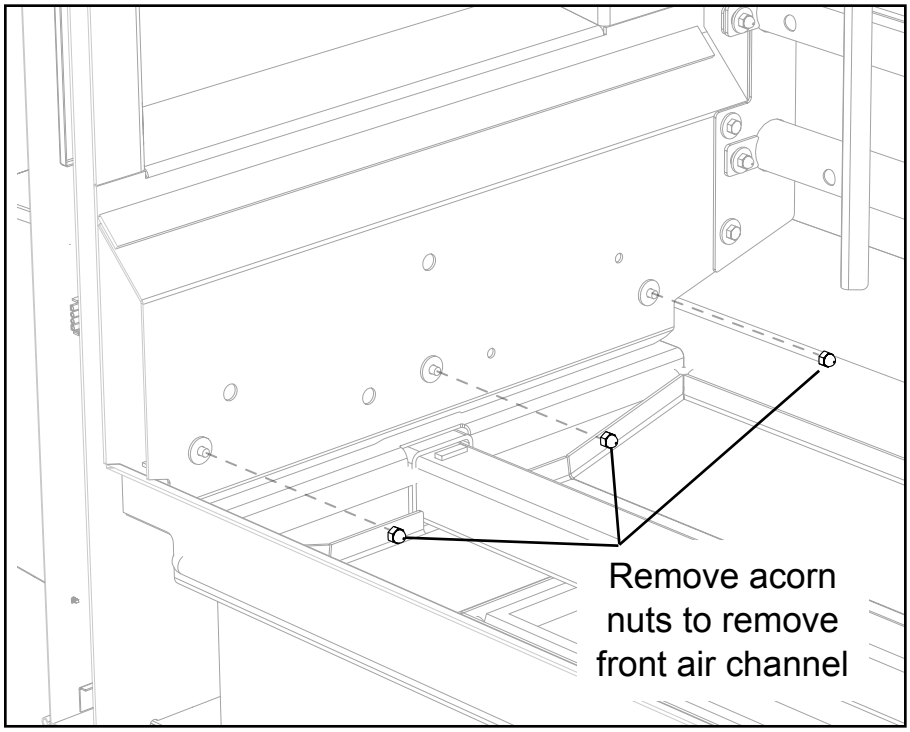

2. Install the new air channel. Apply a high-temperature, anti-seize compound to the stud threads; then secure with the acorn nuts and tighten securely.

TROUBLESHOOTING

GENERAL TROUBLESHOOTING INFORMATION

If the outdoor furnace is not operating the way it should, first review the information found in the Operation Instructions section, particularly the Adding Wood section.

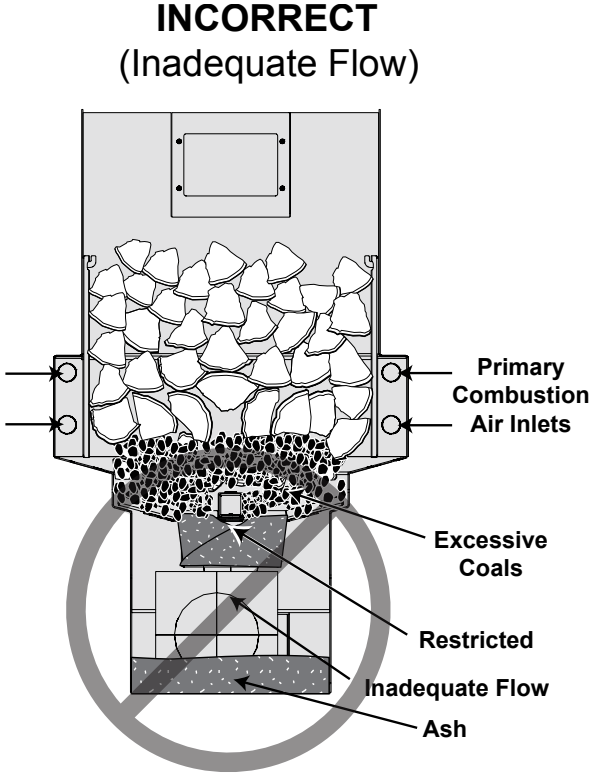

Is the Reaction Chamber full of ash?

The Reaction Chamber is where final combustion occurs. It is important that the Reaction Chamber remain unobstructed to allow final combustion to occur. It is not designed to be an ash collection area, although over time ash will gradually accumulate in the Reaction Chamber.

If ash builds up in the Reaction Chamber to a level that obstructs flow, the performance of the outdoor furnace will be affected, so the ash must be removed. A good rule is to clean the Reaction Chamber before it becomes 1/2 full (approximately 5" or 13 cm deep in any area of the Reaction Chamber).

INCORRECT
(Blocked Flow)

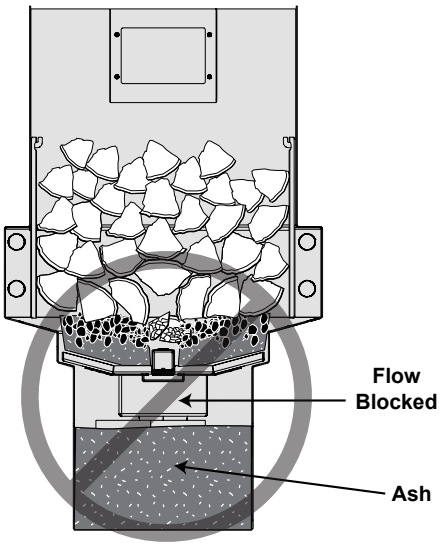

Are the air inlets plugged?

Primary combustion air is provided through the combustion air inlets in the firebox. If the air inlets are restricted or plugged, the furnace will not operate correctly. If it appears the combustion air inlets are plugged or restricted, refer to the Maintenance Sections for the Combustion Air Tubes and Air Tube and Refractory. If after cleaning each combustion air inlet, air flow is still blocked, inspect the primary combustion air elbow. Refer to the Maintenance Section for Primary Air Elbow.

NOTE: If there is creosote buildup in the primary air elbow, it is caused by operating the furnace incorrectly. It is important to follow the recommended operation and maintenance procedures (see Adding Wood section).

Is there creosote and/or ash inside the airbox?

Creosote, ash, or even coals in the airbox is an indication that the outdoor furnace has not been maintained and/or operated properly. Especially important to the operation and efficiency of the outdoor furnace is unrestricted air flow throughout the entire system. Refer to Adding Wood for a detailed explanation of how to operate and maintain your CleanFire.

One or more combustion air inlets are covered - If the level of coals and ash in the firebox is allowed to accumulate over the combustion air inlets, normal air flow can be blocked and could force coals and ash back into the airbox. Remove enough ash so the combustion air inlets are not covered. Review the Adding Wood section for more information.

TROUBLESHOOTING OTHER SITUATIONS

A. OUTDOOR FURNACE IS NOT OPERATING CORRECTLY

Review the information in the Adding Wood section, starting at step 5.

1. **Out of wood** - Add wood as necessary. Use correctly sized, seasoned wood.
2. **Area directly below the charge tube or Combustor obstructed** - Inspect and clean as required.
3. **Combustion air inlets obstructed** - Clean as required to prevent the combustion air inlets from being obstructed.
4. **Combustion air fan obstructed or not running** - Check the screen over the fan inlet and the inside of the fan for any obstructions.
5. **Airbox leaking** - The airbox cover must be properly secured. Determine the cause and correct.
6. **Primary air actuator motor closed** - If the primary air actuator motor is not operating properly, determine the cause and correct.
7. **Reaction Chamber, heat exchanger or the chimney plugged** - If the Reaction Chamber, heat exchanger or chimney are plugged, determine the cause and correct.
8. **Door open** - If the display on the controller indicates Door Open, close the firebox door. Make sure the firebox door is properly latched and check the condition of the firebox door seal. If it is not sealing properly (indicated by a uniform indentation), replace the seal.
9. **Low water** - If the display on the controller indicates Low Water, the system senses a low water condition. Check the water level at the sight gauge and, if necessary, add water according to the Water Quality and Maintenance section. If adding water does not correct the problem, contact your WoodMaster dealer.

NOTE: If water needs to be added, it is very important to identify the cause of water loss and correct immediately. A leaky system or overheating commonly leads to dilution of the corrosion inhibitor and water jacket corrosion.

10. **Low water temperature for too long a period of time** - The display on the controller will indicate Fire Out and the controller will shut down the furnace if the water temperature has been too low for too long. Determine the cause of the water temperature being too low.
11. **Alarm condition** - Refer to the FireStar Combustion Controller Operation Manual.
12. **Chimney not drafting properly** - Draft is the force which moves air from the appliance up through the chimney. The amount of draft in your chimney depends on the length of the chimney, local geography, nearby obstructions and other factors. Draft occurs when the temperature in the chimney is high enough to cause a negative pressure that "pulls" the exhaust up and out the chimney.

    Proper draft is necessary for the CleanFire to operate optimally. Too much draft may cause excessive temperatures in the appliance. Inadequate draft may cause backpuffing and plugging of the chimney.

If poor draft is suspected, perform the following test: with the outdoor furnace and chimney at normal operating temperature, loosen the chimney inspection cover and pull it back about an inch. If exhaust comes out from around the cover, pressure in the chimney may be incorrect and adding more chimney sections may be required. However, due to many variables, even if exhaust does not come out from around the cover, the chimney might still not be drafting properly at all times. Due to a number of variables, poor draft can be an intermittent problem.

NOTE: A qualified installer may perform the following test to check for proper draft. Before performing the test, the outdoor furnace should be completely cleaned to ensure nothing obstructs exhaust flow through the system. Fire the furnace and allow it to reach normal operating temperature before performing the test.

- Drill a hole in the chimney inspection cover; then with the outdoor furnace and chimney at normal operating temperature, use a manometer to check draft. If flue draft is less than -0.05 in. WC (-12.45 Pa) add more chimney sections.
- After the test, fill the hole in the chimney inspection cover with high-temp silicone.

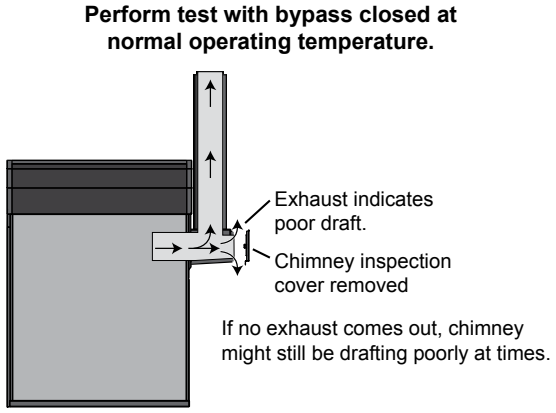

- If a spark arrestor is being used, make sure it is clean and unobstructed.
- Objects like buildings and trees in close proximity or nearby terrain (e.g., hills, valleys, etc.) can adversely affect air flow in the chimney. Adding chimney sections may overcome these factors.

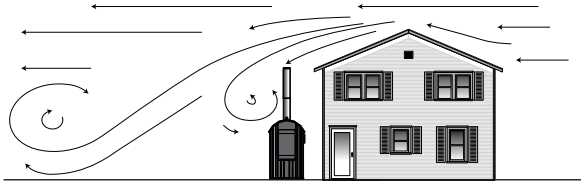

May cause poor draft.

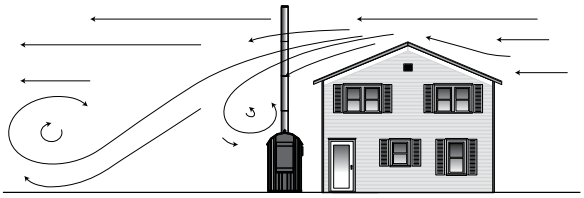

Allows for better draft.

B. FIRE GOES OUT OR KEEPS GOING OUT

Review the information in the Adding Wood section, starting at step 5.

C. BUILDING IS LOSING TEMPERATURE

Review the information in the Adding Wood section, starting at step 5.

1. **Circulation valve(s) closed** - Be sure the proper valves in the system are open to allow circulation.
2. **Circuit breaker off** - If there is a circuit breaker that supplies power to the outdoor furnace, check that it is on.
3. **Circuit breaker off** - Check that the circuit breaker switch (located in the pump compartment) is on. If the circuit breaker has tripped, determine the cause before resetting it.
4. **Circulation pump(s) not operating** - Check that circulation pumps are operating. If not, disconnect power to the pump. Close valves at the pump. Disassemble the pump and try to turn the pump shaft. If the shaft is stuck, replace the pump cartridge. Replace only the cartridge whenever possible. If necessary, replace the pump. Follow instructions supplied with the pump.
5. **Air in system** - Check for air in the water lines or heat exchangers. If you hear a gurgling sound in a heat exchanger, air is present in the system. Shut off the pump, wait 15 seconds and start the pump. If it is necessary to force air from lines, refer to Initial Start-up Procedures.
6. **Building(s) poorly insulated or uninsulated** - Poorly insulated or uninsulated buildings, buildings with uninsulated or poorly insulated ceilings, or a lack of proper insulation under radiant flooring can cause excessive fuel consumption and or heating problems.
7. **Supply and return lines installed incorrectly** - Make sure the hot supply line is connected to the correct fitting on the outdoor furnace and heat exchanger.

8. **Circulation pump(s) installed backwards** - Check that pump flow direction is correct. If not, shut off power to pump. If the flow is not in the correct direction, disconnect pump from water line and reverse pump mounting to correct flow direction. If the pump is not mounted on the outdoor furnace, check for proper pump mounting location.
9. **Underground supply and return lines insulated poorly** - Heat loss from poorly insulated underground supply and return lines is often indicated by an unusually high amount of snow melting above the lines when the ground temperature is 10º F (-12˚C) or colder.
10. **Supply and return lines uninsulated** - Uninsulated supply and return lines in areas that are not intended to be heated (unheated crawl spaces, under mobile homes, etc.) may cause excessive heat loss. Insulate the supply and return lines.
12. **Poor water quality** - Water with high amounts of solids, sand or dirt can create deposits inside the wall of heat exchanger components, reducing the amount of heat output. If this condition is suspected, contact your WoodMaster dealer.
13. **New construction with radiant in-floor heat** - Bringing a cold concrete slab up to temperature the first time will take a considerable amount of time and wood; once warm, wood consumption will be reduced if the concrete slab and building are insulated properly.
14. **Heat load too large** - Re-evaluate the system and match heat load to the outdoor furnace.

D. SMOKE COMING FROM BETWEEN FIREBOX DOOR AND FRONT OF THE DOOR FRAME

1. **Door seal faulty or door frame obstructed** - If there is smoke coming from between the firebox door and the front of the door frame for more than a short time after reloading, scrape the face and surface area of the door frame to remove any deposits. Check the condition of the firebox door seal and replace if necessary.
2. **Door hinges and/or latch need adjusting** - Adjust the hinges and/or latch bearing.

E. OUTDOOR FURNACE IS OVERHEATING

1. **Air entering through the firebox door or smoke coming out of the firebox door when the door is closed** - Make sure the firebox door is properly latched and check the condition of the firebox door seal. If it is not sealing properly (indicated by a uniform indentation), replace the seal. If firebox door does not close tightly, adjust using the appropriate procedure (see Owner Serviceable Items).

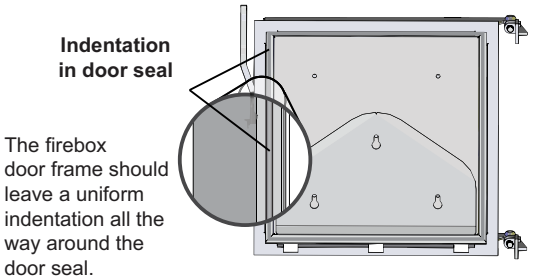

NOTE: If the outdoor furnace is operated with the door open, the firebox door seal may be damaged.

2. **Actuator motor and/or air regulating disc stuck open or obstructed** - Remove any obstructions. Lubricate the chain with a high temperature dry film lubricant rated for chains. Be careful not to get lubricant on the actuator motor or motor shaft. If replacement is necessary, refer to Air Regulating Disc Gaps for the factory settings for the air regulating discs.

NOTE: If the outdoor furnace loses water from boiling, the problem should be identified and repaired immediately. Under normal operation, little or no water needs to be added. Adding water to the furnace may cause corrosion if not immediately treated with MolyArmor 350. In addition, the amount of dissolved solids in the system (due to adding additional water) can cause problems.

3. **Water is not circulating** - Check to make sure the pump is operating and water is circulating continuously through the supply and return lines to keep water temperature uniform in the outdoor furnace.
4. **Circulation valve(s) closed** - Be sure the proper valves in the system are open to allow circulation.
5. **Pulse set to run too long and/or too often in a low heat draw situation** - Increase the time between idle pulses of air and/or decrease the amount of time the pulse is provided (see FireStar operating instructions).
6. **FireStar combustion controller set incorrectly** - Refer to FireStar Combustion Controller Operation Manual.

F. FREQUENT PUMP TROUBLE OR POOR WATER CIRCULATION

1. **Pump mounted incorrectly** - If the pump is not mounted on the outdoor furnace, it must be mounted at a minimum of four feet lower than the top water level in the outdoor furnace.

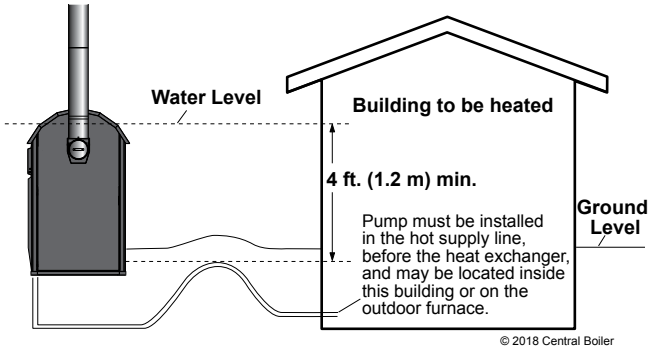

Make sure the pump motor is installed in a horizontal position. The junction box must not be located below the pump motor. If necessary, remove the four screws and rotate the pump body.

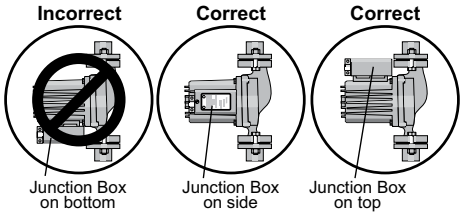

2. **Water will not circulate** - If the system has been drained and refilled, or if the system has been opened for any reason (e.g., replacement of pump, adding heat exchangers, repairing a leak), the system must be purged (see Initial Start-up Procedures).
3. **Poor water quality** - Water with high amounts of solids, sand or dirt can cause frequent pump failure. Use softened and/or filtered water.
4. **Deposits in water lines/heat exchanger walls** - If water high in silica or other mineral content has been used, material deposits may build up on the insides of the supply and return lines and on the heat exchanger walls. If this occurs, the system will need to be drained and then cleaned using Sludge Conditioner (p/n 166). The system must then be refilled with the proper amount of MolyArmor 350 (p/n 2900631) and fresh water.

G. BURNING AN EXCESSIVE AMOUNT OF WOOD

1. **High volume water heating** - High volume water heating (e.g., car wash, swimming pool, etc.) will require high wood consumption.
2. **Excessive heat loss** - See items 6-10 of Building is Losing Temperature.
3. **Supply and return line heat loss** - If not using ThermoPEX, supply and return lines buried in a wet, low-lying area may cause a large heat loss that will greatly increase wood consumption.
4. **High heat demand** - Concrete slabs (with radiant heat) that are poorly insulated or are exposed to water or cold outside temperatures will require increased wood consumption (see Hydronic Installations section). Bringing a cold concrete slab up to temperature the first time will take a considerable amount of time and wood; once warm, wood consumption will be reduced if the concrete slab and building are insulated properly. The following will also have a high heat demand: poorly insulated buildings, buildings with large amounts of glass windows/doors, buildings with overhead doors, greenhouses, uninsulated crawl spaces, outdoor air infiltration and air leaking through foundation.

H. VISIBLE EXHAUST COMING FROM CHIMNEY

Review the information in the Adding Wood section, starting at step 5.

There are conditions related to outside temperatures, humidity, fuel moisture, burn rate and other factors that can cause steam to be visible in the exhaust plume of combustion equipment, whether it is wood, gas or oil.

Seeing a white exhaust plume with moisture present is normal under many conditions and is not suggestive of poor combustion or high emissions.

Opacity is the amount of light which is blocked in an exhaust plume. It is a measurement that is usually stated as a percentage. For example, an opacity of 0% means that all light passes through while an opacity of 100% means that no light can pass through. Opacity measurements give an indication of the concentration of particles in an exhaust plume.

To read opacity correctly, observations should be made only when:

- The sun is shining and behind you,
- You are at least three times the distance of the chimney height away from the furnace, and
- The plume is traveling perpendicular to your position.

The observation should be conducted looking at the point of the plume where condensed water vapor (steam) is not present. Do not observe the plume itself but rather look through it at a contrasting background (such as green leaves or trees). There are many other important factors as well.

The amount of visible emissions can be reduced by burning seasoned wood, by making sure that your chimney meets the recommendations in this owner's manual and by loading the firebox to match your heat load. Once the water content of the wood has evaporated, the emissions become very transparent.

1. **Too much ash in firebox** - Refer to Routine Maintenance for ash removal.

I. CORROSION IS PRESENT - CALL DEALER

NOTE: To reduce condensation in the firebox, it is not recommended to set the temperature below 185˚F (85˚C).

1. **Burning garbage or plastic** -Do not burn garbage or plastic. It is likely unlawful and may damage the firebox in a very short period of time.

NOTE: Chloride or sulfurous gases can be generated if plastic or rubber is burned and will mix with the moisture from the wood to form hydrochloric or sulfuric acids in the firebox, creating corrosion.

2. **Firebox wasn't cleaned out at the end of the heating season** - Be sure to follow the post-heating season maintenance schedule which includes scraping out firebox and removing all ash.
3. **Cleaning rod not run through ash bed prior to loading wood** - It is important that you push the cleaning rod back and forth through the ash bed each time prior to loading wood to allow air flow and prevent the ashes from accumulating moisture. See Operating Instructions for more details.

GENERAL INFORMATION

Make note of these precautionary statements, also found on the outdoor furnace.

NOTICE

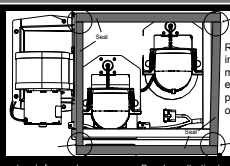

Refer to Owner's Manual in regards to stepper motor operation. This is essential to maintaining proper and efficient operation of the furnace.

Inspect seals for any damage or gaps. Pay close attention to corners and any location where one seal meets another, as a good seal is crucial for proper furnace operation. Refer to the Owner's Manual for instructions on how to replace a defective seal.

*Airbox illustration for reference only. Actual setup and component location may differ from your specific model. Refer to your Owner's Manual for more details.

p/n 7000852

CAUTION

Take care not to damage the temperature sensor when removing ash.

ATTENTION

Prenez soin de ne pas endommager le capteur de température lorsque vous enlevez les cendres.

NOTICE

During a cold start, a considerable amount of moisture from condensation will collect inside the firebox and Reaction Chamber. This is normal and the moisture will evaporate when the outdoor furnace reaches operating temperature.

REMARQUE

Lors d'un démarrage à froid, une importante quantité d'humidité de condensation s'accumule à l'intérieur du foyer et de la chambre de réaction. Ce phénomène est normal et l'humidité s'évaporera lorsque la chaudière extérieure aura atteint sa température de service.

p/n 7000856

NOTICE

Chimney pipe and all extensions must be insulated.

REMARQUE

Coupez l'alimentation électrique avant d'enlever ce panneau.

CAUTION

HOT Surfaces

Do NOT Touch During Operation

ATTENTION

Surfaces BRÛLANTES

NE touchez PAS pendant le fonctionnement

p/n 7000240

WARNING

Disconnect power before removing this panel.

AVERTISSEMENT

Coupez l'alimentation électrique avant d'enlever ce panneau.

p/n 7000245

NOTICE

For use with aluminum or copper conductors.

REMARQUE

Pour utilisation avec des conducteurs en aluminum ou en cuivre.

p/n 7000247

NOTICE

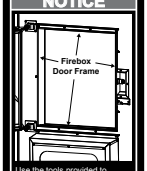

Use the tools provided to completely scrape the face of the firebox door frame where the door seal contacts.

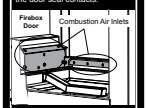

Keep the combustion air inlets and exhaust pathway open and clear of ash to allow the furnace to operate properly.

p/n 7000853 Rev. B

AVIS

Pour réarmer le disjoncteur, amenez l'interrupteur sur ARRÊT puis sur MARCHE.

p/n 7000230

WARNING

AVOID DAMAGE!

BEFORE operating this appliance read manual and watch videos for proper operation and maintenance procedures.

Damage or decreased life expectancy of appliance could result if appliance is not properly operated or maintained.

p/n 7000508

CAUTION

ANY TIME WATER IS ADDED, the furnace MUST BE immediately heated to 185°F, circulated, and the inhibitor level tested. FAILURE TO DO SO WILL RESULT IN DAMAGE to your furnace's water jacket!

Carefully follow the steps in your Owner's Manual for adding water and testing inhibitor levels.

p/n 7000877

NOTICE

Initially inspect the heat exchangers weekly, and clean as needed, until you can determine the frequency of cleaning based on your application.

Refer to the Owner's Manual for cleaning procedures.

p/n 7000676

WARNING

Risk of fire. Do not store fuel or other combustible materials within marked clearances to combustibles. Do not cover supply and return lines with combustible materials.

AVERTISSEMENT

Risque d'incendie. Ne stockez pas de carburant ou autres matériaux combustibles à l'intérieur du périmètre de sécurité indiqué. Ne recouvrez pas les conduites d'alimentation et de retour avec des matériaux combustibles.

p/n 7000243

DO NOT BURN GARBAGE

Burning garbage causes damage to components of wood burning appliances.

HPBA

Refer to your Owner's Manual.

BURN RESPONSIBLY

Preserve Your Right to Burn Wood

- Before installing, ALWAYS consider the direction that the chimney exhaust will travel with prevailing winds.
- BEFORE operating, the furnace must be installed with adequate chimney height. If there is a residence not served by the furnace within 300 feet (91.5 meters), the chimney must be 2 feet (0.6 meters) higher than the peak of the residence it serves. If there is a residence not served by the furnace within 100 feet (30.5 meters), the chimney must be 2 feet (0.6 meters) higher than the peak of the residence served or not served, whichever is higher. Proper chimney height will aid in dispersing the chimney exhaust. Chimney height may need to be greater than the above minimum requirements. The outdoor wood furnace must be installed in accordance with the manufacturer's recommendations and/or in accordance to all applicable codes and regulations, whichever is more stringent. Refer to your Owner's Manual.
- ONLY burn the proper fuels specified.
- DO NOT create a nuisance. Be certain your chimney exhaust is not adversely affecting neighbors. Creating a nuisance may affect your right to burn wood. If any issue with chimney exhaust arises, take immediate action to solve the issue.
- Properly dispose of ashes into a metal container with a cover.
- It's been said that lighting a fire can be more of an art than a science. You may need to vary techniques to achieve best results. Many factors can have a significant effect such as size of wood, moisture content, wood storage, etc. Over time, you will become familiar with your particular conditions. This will allow you to identify cause and effect in a variety of circumstances and what works best for your conditions.

Protect your right to heat with wood. Careless operation may result in a loss of your rights.

Rev. 1 p/n 7000001

DANGER

•Risk of fire or explosion.

DANGER

•Risque d'incendie ou d'explosion

WARNING

- Risk of fire.
- DO NOT operate with flue draft exceeding -0.050 in. water column (-12.450 Pa).
- DO NOT use chemicals to start unit firing.
- DO NOT burn garbage, gasoline, fuel oils, or other flammable liquids or materials.
- DO NOT operate with fuel-loading or ash-removal doors open.
- DO NOT store fuel or other combustible materials within marked installation clearances
- Inspect and clean flues and chimney regularly.
- For safety, open bypass door 15 seconds before opening the firebox door and do not operate the furnace with the firebox door unlatched.
- Operating the furnace with the firebox door unlatched may lead to a runaway fire. In the event of a runaway fire or immediately after tending to the fire, latch the firebox door and wait 15 seconds before closing the bypass door to purge the firebox.
- DO NOT leave furnace unattended with the firebox door unlatched.
- DO NOT install or operate furnace before first reading and understanding the Owner's Manual.
- DO NOT allow others to install or operate furnace without first reading and understanding the Owner's Manual.

AVERTISSEMENT

- Risque d'incendie.
- N'UTILISEZ PAS l'appareil si le tirage dépasse de -0,050 pouce la colonne d'eau (-12,450 Pa).
- N'utilisez PAS de produits chimiques pour allumer la machine.
- Ne brûlez PAS de déchets, d'essence, l'huile de vidange ni d'autres liquides ou matériaux inflammables.
- NE faites PAS fonctionner la chaudière avec la porte de chargement du combustible ou celle d'enlèvement des cendres ouverte.
- NE stockez PAS de carburant ou autres matériaux combustibles à l'intérieur du périmètre de sécurité indiqué.
- Inspectez et nettoyez périodiquement les carneaux et la cheminée.
- Pour des raisons de sécurité, ouvrez la porte de dérivation quinze secondes avant d'ouvrir la porte du foyer. Ne faites pas fonctionner la chaudière avec la porte du foyer déverrouillée.
- Si la chaudière fonctionne avec la porte du foyer déverrouillée, un feu de cheminée risque de se déclarer. Si un feu de cheminée survient ou immédiatement après avoir éteint le feu, verrouillez la porte du foyer et attendez quinze secondes avant de fermer la porte de dérivation pour purger le foyer.
- Ne laissez PAS la chaudière sans surveillance lorsque la porte du foyer est déverrouillée.
- N'installez PAS et N'utilisez PAS la chaudière avant de lire et de comprendre le manuel du propriétaire.
- N'autorisez PAS d'autres personnes à installer et utiliser la chaudière avant de lire et de comprendre le manuel du propriétaire.

p/n 7000232

WARNING

Turn off Furnace Power Disconnect before opening this panel. Furnace Power Disconnect located on side of furnace under the pump panel. Do not operate furnace with this panel removed.

AVERTISSEMENT

Avant d'ouvrir ce panneau, arrêtez le commutateur de coupure électrique de la chaudière. Ce commutateur est situé sur le côté de la chaudière sous le panneau de la pompe. Ne pas faire fonctionner la chaudière à bois extérieur avec ce panneau retiré.

p/n 7000441

WARNING

Risk of fire. Do not open the Reaction Chamber door when appliance is in operation. Do not leave Reaction Chamber door open unattended.

AVERTISSEMENT

Risque d'incendie. N'ouvrez pas la porte de la chambre de réaction lorsque l'appareil est en marche. Ne laissez pas la porte de la chambre de réaction ouverte sans surveillance.

p/n 7000391

CAUTION

Failure to perform proper care and maintenance will reduce the life and performance of your furnace. For best results, always follow these guidelines:

1. Add water treatment *before* filling with water.
2. Burn properly seasoned wood.
3. Do not burn anything other than the recommended fuels.
4. Clean and inspect the furnace regularly.
5. Do not operate with the water temperature below 150˚F (66˚C).
6. Maintain the recommended water treatment levels at all times.
7. Clean the firebox thoroughly and keep it dry when not in use.
8. See Owner's Manual for more information about regularly scheduled maintenance.

ATTENTIONI

Remove the Owner's Manual and read it before operating furnace. If you have any questions, contact your dealer.

NOTICE

Inspect and clean the heat exchangers monthly or as needed.

READ OWNER'S MANUAL FOR COMPLETE INSTRUCTIONS.

MAINTENANCE SCHEDULE

DAILY
Check water level. Remove ashes as needed.

MONTHLY
Check door seal, chimney and vent cap. Remove ashes and clean the firebox. Inspect and clean the heat exchanger and Reaction Chamber.

SEMIANNUALLY
Completely remove ashes from the firebox. Inspect and scrape the firebox. Inspect and clean the heat exchanger and Reaction Chamber. This inspection should also be performed after the first and third months of operation. Use a wire brush and small scraper to clean firebox, side walls, back wall and ash pan.

READ OWNER'S MANUAL FOR COMPLETE INSTRUCTIONS.

p/n 7000394 Rev. B

CAUTION

- DO NOT start fire until water level is full.
- Keep face away from door area.
- Hot surfaces.
- Keep children away.
- DO NOT touch during operation.
- DO NOT burn treated wood, plastics or rubber in the furnace.
- Maximum draft marked on the nameplate.
- ALWAYS comply with all applicable codes and regulations.
- ALWAYS take care when adding wood to the furnace to prevent hot coals from spilling out.
- ALWAYS store ashes in a covered non-combustible container.

ATTENTION

- NE démarrez PAS le feu avant de faire le plein d'eau.
- Éloignez votre visage de la porte.
- Surfaces brûlantes.
- Éloignez les enfants.
- NE touchez PAS pendant l'utilisation.
- NE brûlez PAS de bois traité, de plastique ou de caoutchouc dans la chaudière.
- Le tirage maximal est indiqué sur la plaque signalétique.
- Respectez TOUJOURS l'ensemble des législations et réglementations applicables.
- Procédez TOUJOURS avec précaution lorsque vous ajoutez du bois dans la chaudière pour éviter de faire tomber des braises à l'extérieur.
- Stockez TOUJOURS les cendres dans un récipient non combustible et couvert.

p/n 7000233

CAUTION

Do not plug, block or seal vent opening. Sealing can result in a dangerous buildup of pressure.

ATTENTION

Ne pas bloquer, obturer ou sceller l'ouverture du conduit d'évacuation. Sceller l'ouverture pourrait entraîner une augmentation dangereuse de la pression.

p/n 7000525

CAUTION

Watch your head.

p/n 8956

CAUTION

15 seconds before opening firebox door, lift and push handle toward back of furnace to open bypass door.

15 seconds after closing firebox door, pull handle toward front of furnace and push down to close bypass door.

ATTENTION

Quinze secondes avant d'ouvrir la porte du foyer, ouvrez la porte de dérivation en soulevant puis poussant la poignée en direction de l'arrière de la chaudière.

Quinze secondes après avoir fermé la porte du foyer, fermez la porte de dérivation en tirant la poignée en direction de l'avant de la chaudière puis en la poussant vers le bas.

p/n 7000273

CAUTION

DO NOT disable the door switch, as it serves as a safety and reset function.

ATTENTION

NE désactivez PAS l'interrupteur de porte car il sert de fonction de sécurité et de réinitialisation.

p/n 7000494

WIRING DIAGRAM

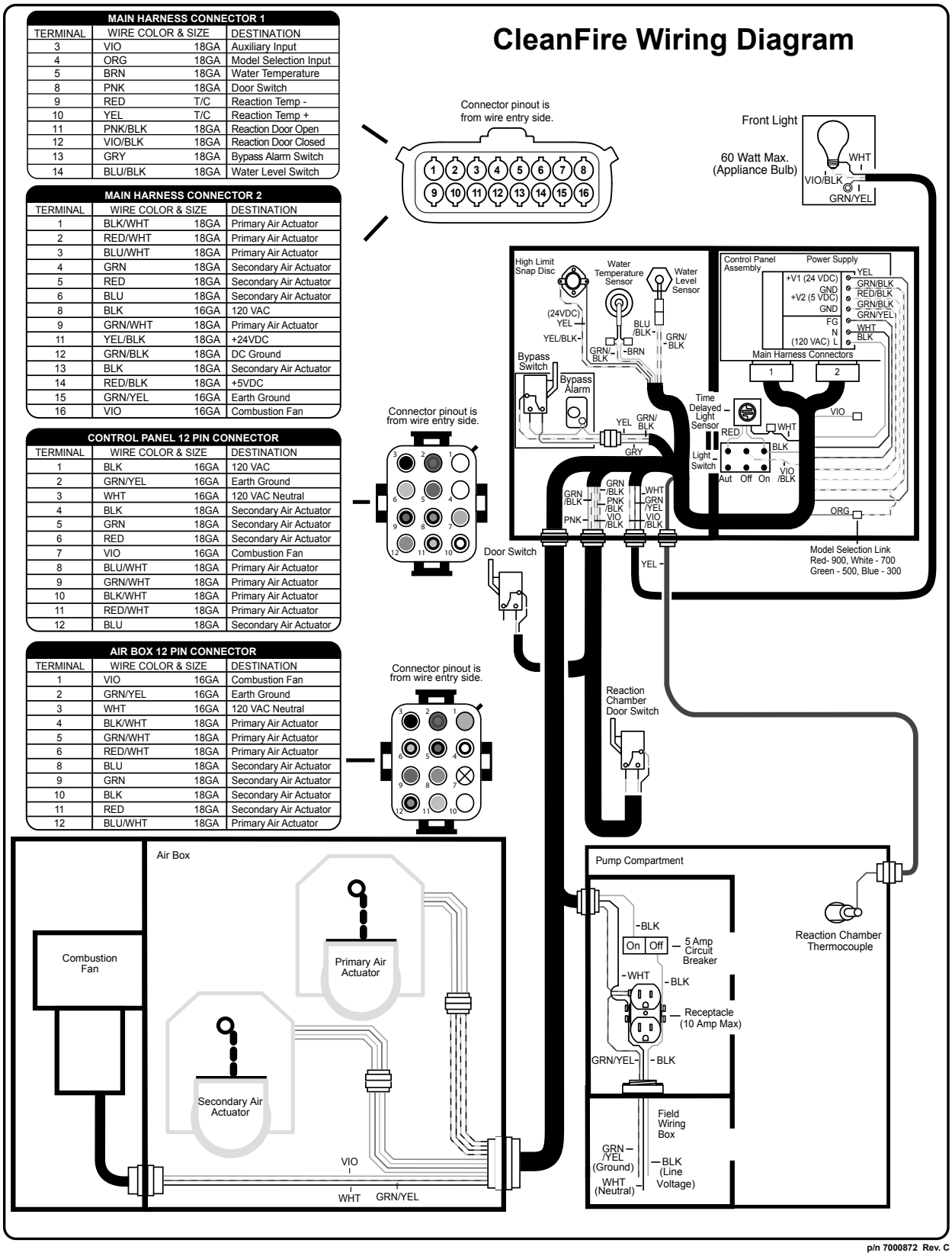

WATER SAMPLE INFORMATION - CLEANFIRE MODELS

NOTE: It is your responsibility as owner to ensure that your water sample information is accurate and that you submit your samples on a timely basis as required by the warranty for your stainless steel outdoor furnace. Failure to do so will result in a one year warranty.

WATER SAMPLE LABEL INFORMATION

Use the Water Sample Kit provided in your owner's packet or include the water sample label information below when mailing water samples to WoodMaster.

NAME: _____

ADDRESS: _____

CITY: _____STATE:_____ZIP: _____

EMAIL: _____

PHONE: _____ FURNACE SERIAL # _____

DEALER: _____

DATE SAMPLE COLLECTED: _____

☐ NO ANTIFREEZE ADDED ☐ANTIFREEZE ADDED

Please check ONE box

FOR LAB USE ONLY:

Moly pH Ni Date

MAILING LABEL

Use the Water Sample Kit provided in your owner's packet or send water samples to WoodMaster, Attn: Water Quality Department, 20502 160th Street, Greenbush, MN 56726.

FROM _____

_____

_____

WOODMASTER, INC.
ATTN: WATER QUALITY DEPARTMENT
20502 160th Street
Greenbush, MN 56726

LIMITED WARRANTY - CLEANFIRE MODELS

WoodMaster, Inc. ("WoodMaster") warrants to the original owner, except (a) parts manufactured by others and excluded from warranty coverage below; and (b) parts or items specified below as covered by a limited one year warranty, WoodMaster CleanFire Series furnaces against defects in workmanship and against corrosion failure of the firebox/water jacket assembly for a period of TWENTY-FIVE (25) YEARS from the date of original retail purchase, provided that the Limited Warranty Registration Form is completed and sent to WoodMaster within ten (10) days of the original owner taking possession of the furnace and the original owner strictly complies with the instructions for maintenance and water treatment contained in the Owner's Manual; otherwise this Limited Warranty shall be for a period of ONE (1) YEAR from the date of manufacture or one year from original retail purchase, if proof of purchase date can be provided.

If a failure of a warranty covered part occurs that is caused by a defect in workmanship or corrosion, at its option WoodMaster will (1) repair or replace (using new or refurbished replacement parts) the defective or failed part based on the date of original retail purchase at the following prorated scale:

First – Fifth year: Parts and labor will be covered at 100%
Sixth year: Parts will be covered at 70%
Seventh year: Parts will be covered at 60%
Eighth year: Parts will be covered at 50%
Ninth year: Parts will be covered at 40%
Tenth – Twentieth year: Parts will be covered at 15%
Twenty-first – Twenty-fifth: Parts will be covered at 10%

(2) exchange the furnace with a comparable model furnace that is new or which has been manufactured from new or serviceable used parts and is at least functionally equivalent to the original furnace, or (3) provide a discount off the retail purchase price of a new WoodMaster furnace of comparable model based on the pro-rated scale: Years 1-5 100%, years 6-7 at 50%, years 8-10 at 40%, years 11-15 at 30% and years 16-25 at 10%. A replacement furnace/part assumes the remaining warranty of the original furnace/part or ninety (90) days from the date of replacement or repair, whichever provides longer coverage. If a furnace or part is qualified for replacement under the provisions of this limited warranty, at WoodMaster's discretion, the furnace or part may be required to be returned to WoodMaster for inspection and recycling or disposal.

Because maintaining the corrosion inhibitor at a proper level is imperative to preventing corrosion failures, to qualify for the 25 year warranty the operator must comply with the instructions in the owner's manual for maintenance and water treatment and send a furnace water sample when the furnace is initially put into service and once each year thereafter to confirm proper maintenance and water treatment. No warranty claim can be approved unless the furnace registration and the required water test verifications are on file at WoodMaster.

Parts Manufactured By Others. Parts that are factory-installed by WoodMaster, but are manufactured by others, may be covered by their own manufacturer's warranty and are not covered by this limited warranty, except the FireStar® combustion controller on the CleanFire Titanium Series furnace is warranted against defects in workmanship for a period of two (2) years from the date of original retail purchase, provided that the Limited Warranty Registration Form is completed and sent to WoodMaster within ten (10) days of the original owner taking possession of the furnace; otherwise this limited warranty shall be for a period of ONE (1) YEAR from the date of original retail purchase. This limited warranty covers the controller part only; service calls, mileage, and labor to diagnose the problem and install a new part are not covered.

Parts Covered by a Limited One Year Warranty. The following parts are covered by a limited warranty for workmanship defects for one year: gaskets, seals, heat shields, paint, air charge tube, firebox ash pan, combustors, aquastats, actuators, heat refractory, firebrick, air channels, combustion air tubes, turbulators, chimney sections, and chimney tee. This limited warranty covers the part only; service calls, mileage, and labor to diagnose the problem and install a new part are not covered.

EXCLUSIONS AND LIMITATIONS - This Limited Warranty applies only to WoodMaster CleanFire Titanium Series outdoor furnaces. This limited warranty covers only those defects or corrosion failures that arise as a result of normal use of the outdoor furnace and does not cover any other defects or problems, including those that arise as a result of: (a) improper maintenance (b) operation outside the furnace's specifications (see owner's manual), accident, abuse, misuse, misapplication, or parts that are not factory-installed; (c) service performed by anyone other than WoodMaster unless authorized by WoodMaster in writing; (d) modifications undertaken without the written permission of WoodMaster; or (e) if any WoodMaster serial number has been removed or defaced. This limited corrosion warranty will be void if the owner fails to maintain the proper amount of WoodMaster inhibitor in the system, fails to send water samples to WoodMaster as required, or burns materials in the firebox other than natural wood. This limited warranty excludes the cost of shipping, labor to remove or reinstall the furnace, plumbing labor and/or parts and the cost of alternative heat if the furnace is out of service for repairs. Warranty excludes replacement of water, inhibitors or other additives, and parts used in the system whether or not mounted on the furnace, such as pumps, valves, and piping.

WoodMaster is not liable for damage or repairs required as a consequence of faulty installations or applications by others or any event of force majeure. WoodMaster is not liable for incidents or accidents which can be prevented by the owner or that occur from the operation of the outdoor furnace. A backup heating system should be in place to prevent damage in case of failure to refuel the outdoor furnace or in the event that mechanical failure of the outdoor furnace or system occurs. Heat replacement representations found in WoodMaster promotional information should be used only as a guideline. Heat loss for all applications with all weather extremes and other heat variables must be considered when sizing an outdoor furnace for different applications.

THIS LIMITED WARRANTY AND REMEDIES SET FORTH ABOVE ARE EXCLUSIVE AND IN LIEU OF ALL OTHER WARRANTIES, REMEDIES AND CONDITIONS, WHETHER ORAL OR WRITTEN, EXPRESS OR IMPLIED. WOODMASTER SPECIFICALLY DISCLAIMS ANY AND ALL IMPLIED WARRANTIES, INCLUDING, WITHOUT LIMITATION, WARRANTIES OF MERCHANTABILITY AND FITNESS FOR A PARTICULAR PURPOSE. IF WOODMASTER CANNOT LAWFULLY DISCLAIM IMPLIED WARRANTIES UNDER THIS LIMITED WARRANTY, ALL SUCH WARRANTIES, INCLUDING WARRANTIES OF MERCHANTABILITY AND FITNESS FOR A PARTICULAR PURPOSE ARE LIMITED IN DURATION TO THE DURATION OF THIS WARRANTY. No WoodMaster dealer or employee is authorized to make any modification, extension, or addition to this limited warranty. WOODMASTER IS NOT RESPONSIBLE FOR DIRECT, SPECIAL, INCIDENTAL OR CONSEQUENTIAL DAMAGES RESULTING FROM ANY BREACH OF WARRANTY OR CONDITION, OR UNDER ANY OTHER LEGAL THEORY. Some states and provinces do not allow the exclusion or limitation of incidental or consequential damages or exclusions or limitations on the duration of implied warranties or conditions, so the above limitations or exclusions may not apply to you. This warranty gives you specific legal rights, and you may also have other rights that vary by state or province.

OBTAINING WARRANTY SERVICE - To obtain warranty service, contact the WoodMaster dealer from whom you purchased your furnace or contact WoodMaster by telephone (800-932-3629) or mail (600 Polk Ave. SW, Red Lake Falls, MN 56750). Please provide the dealer's name, original date of sale, model number and serial number in all communications. WoodMaster reserves the right to require the warranty service to be performed at a WoodMaster facility when deemed necessary by WoodMaster. All corrosion repairs will be performed at WoodMaster unless authorized by WoodMaster in writing.

Design Changes. WoodMaster reserves the right to change and improve the product design for improved performance without assuming responsibility to upgrade previously sold products.

©2021 WoodMaster
(p/n 9000847 - REV. A) - JAN-2021

FIRESTAR®
COMBUSTION CONTROLLER OPERATION MANUAL

SOFTWARE VERSION 6.8x

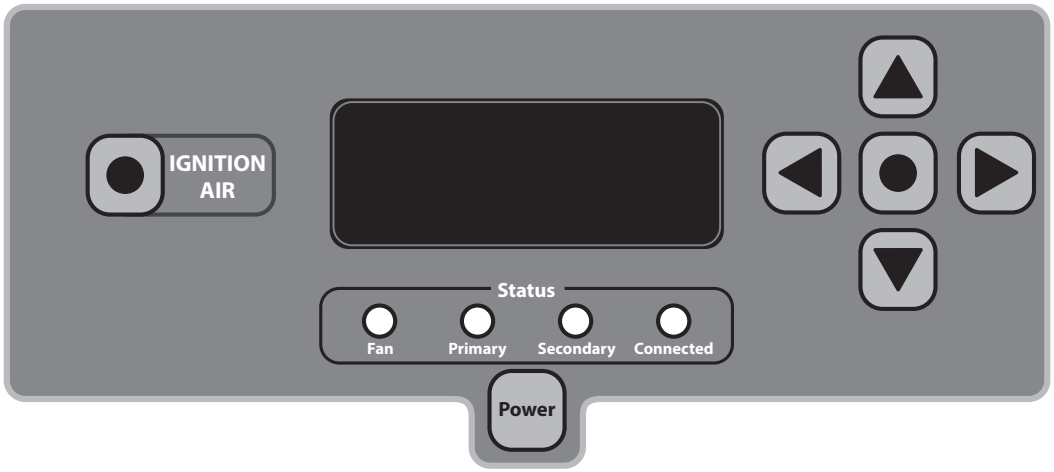

FIRESTAR® with E-Link Technology

For parts and accessories, service or repairs, call your authorized Central Boiler dealer or heating contractor. Record the information below for future reference.

Serial Number	Installation Date
Dealership Name	Phone Number
Owner Name	

Save This Manual
For Future Reference

(p/n 9000720) - Rev. C - OCT. 2020

MADE IN USA

Contents

How to Use This Guide

The guide is divided into sections to help with the operation of the FireStar Combustion Controller. If questions arise that are not answered with this manual, consult with your authorized Central Boiler dealer.

Overview **4**
- FireStar Combustion Controller 4

Outdoor Furnace Operation **6**
- Power 6
- Standby/Idle 6
- Idle Pulse 6
- Demand Mode 7
- Idle Transition Mode 8
- Door Open 8
- Ignition Air 9
- Burn Time Monitor 10
- Easy Refire Burn Time Limit 11

Basic Controller Features **12**
- Adjusting Water Temperature Setpoint 12
- To Lock/Unlock Controller 12
- Power Outage 12

Setup Mode and Adjusting FireStar Settings **13**
- To Enter Setup Mode 13
- Changing Control Preferences 13
- To Exit Setup Mode 13
- To reset controller to default settings: 13
- Variables Chart 14

LED Display Alarm Definitions **17**

Connecting FireStar Combustion Controller to Wi-Fi Network **20**

Overview

FireStar Combustion Controller

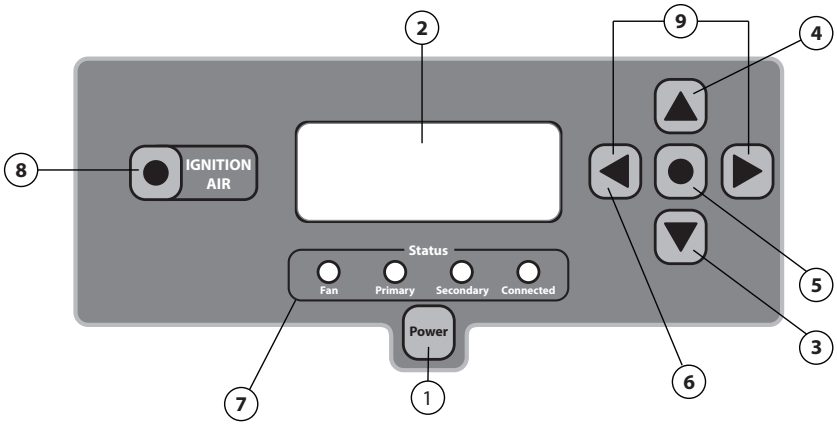

The FireStar Combustion Controller uses a number of sensors and sophisticated programming to optimize the operation of the outdoor furnace. The controller will automatically adjust the amount of primary and secondary air to optimize the gasification process, making the outdoor furnace more efficient and clean burning.

If the controller detects an abnormal condition (for example, the water level is low or the fire has gone out because there is no more wood in the firebox), the controller will display a message to alert you.

Before operating the FireStar Combustion Controller, become familiar with the information the control panel provides and with the procedures for making changes to settings.

How to Check the Controller Software Version Number

Press the Power button to turn the controller off, wait a moment, and then press the Power button again to turn the controller back on. During startup, the current software version number will be displayed, followed by the current furnace model that the controller is installed on.

1. **Power button** - used to turn the FireStar Combustion Controller on and off. It does not disable all electrical power to the furnace.

   To disable electrical power to the furnace: shut the breaker off in the house or wherever the source of power to the furnace is.

   To disable electrical power to the controller: shut off the circuit breaker located in the pump compartment. The circuit breaker in the pump compartment does NOT shut off power to the furnace.

2. **LED display** - displays the furnace water temperature (and the Reaction Chamber % if enabled). Other information will also be displayed on the LED display depending on setting, modes, alarms, warnings, etc.

3. **DOWN arrow button** - if quickly pressed four times, the display will start alternating water temperature and Reaction Chamber % (only alternates when the fan is running).

4. **UP arrow button** - if pressed and held during normal operation, the LED display will show the current Reaction Chamber % (as it relates to the combustion temperature).

5. **Center MENU button** - used to enter the menu system to adjust settings, and to enter changes to those settings when used in combination with the UP and DOWN arrows.

6. **LEFT arrow button** - if pressed and held, it will display the temperature sensed by the optional return water temperature kit. To lock the controller, quickly press the LEFT arrow button four times. LOCK will display on the LED display.

7. **Status indicator LEDs** - display the current state of furnace operation. The Connected LED indicates the status of the controller's wi-fi connection, when enabled.

8. **IGNITION AIR button** - used to bypass the normal door open function. If this button is pressed while the furnace door is open, the primary air actuator will open, helping to light the fire in the firebox.

9. **LEFT arrow button + RIGHT arrow button** - if pressed and held at the same time, it will display the total amount of time the fan has been running for this load of wood.

Outdoor Furnace Operation

Power

OVERVIEW: Turn the FireStar on or off by pressing the Power button. Look for the software version as the controller is turning on.

When the controller is off, the LED display will be off. To turn the controller on or off, press the Power button. Upon startup, the controller will display a number indicating the software version number followed by the furnace model number. Once the controller is on, briefly pressing the Power button will display the software version number. The settings and operation described in this article are for software version 6.8. Other software versions will operate differently.

Standby/Idle

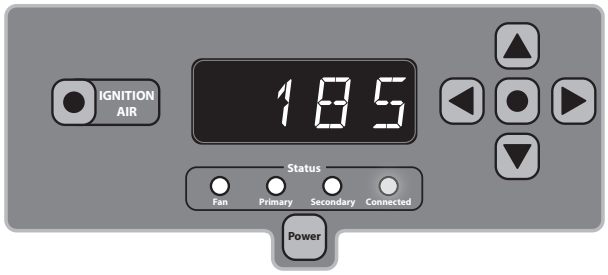

OVERVIEW: Once the water is at the temperature you set, the controller waits until the water temperature drops before entering into one of the burn cycles.

After the water temperature has risen above the Water Temperature Setpoint, the controller will go into Idle. When in Idle, the LED will display the furnace water temperature and the fan, primary and secondary air lights will be off. The connected light may be on, depending on wi-fi connection status.

Idle Pulse

OVERVIEW: When the controller is in idle, it adds a short burst of air occasionally to keep the fire in the coal bed ready.

While in idle, the combustion fan will start and the primary and secondary air actuators will open for a short time every 30 minutes to maintain the coal bed (the initial pulse will wait 60 minutes). Air will continue to flow until the temperature in the Reaction Chamber rises above 225°F.

Demand Mode

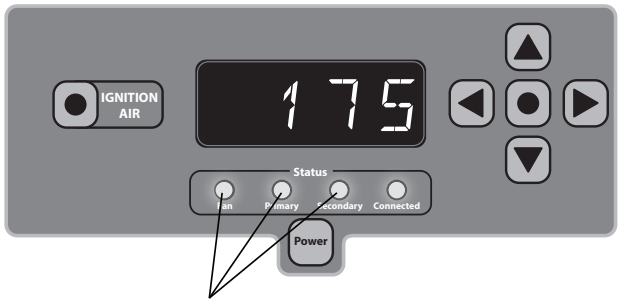

Fan, Primary and Secondary LEDs will be illuminated

OVERVIEW: When the water temperate drops enough, the controller starts to add air, which in turn gets the wood burning, causing the Reaction Chamber temperature to rise.

When the water temperature drops below the Water Temperature Setpoint minus the Water Temperature Differential, the controller will enter Demand Mode. During Demand Mode, the fan, primary and secondary LEDs will be illuminated.

Idle Transition Mode

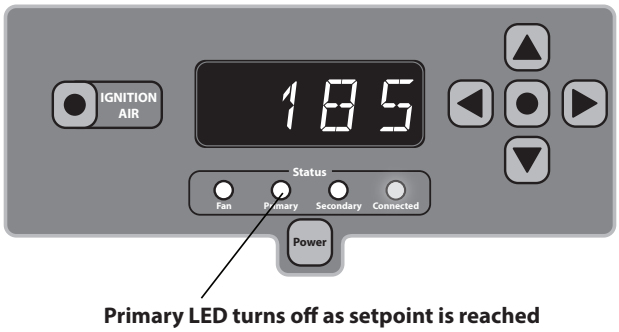

OVERVIEW: Once the water temperature reaches the water temperature you set, the primary air is shut and the secondary air is slowly shut off while burning off the remaining gases.

As the water temperature setpoint is reached in Demand Mode, the primary air actuator will close to stop combustion and the Primary status LED will turn off. The combustion fan will stay on for a while with the secondary air actuator open, and then the fan will shut off. This transition mode allows the combustion process to ramp down and burn off the gasification products before the furnace goes into idle.

Door Open

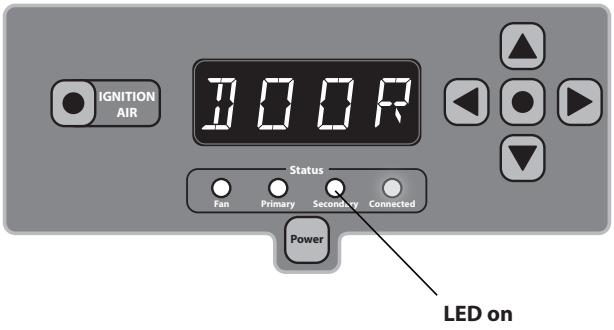

OVERVIEW: Indicates that the firebox door is open. The combustion fan will be running to vent gases from the furnace.

Opening the furnace door automatically places the furnace in Door Open Mode. In this mode, the primary air actuator is closed, the combustion fan is on, and the secondary air actuator is open to continually vent gases from the Reaction Chamber. The Secondary status LED will be illuminated while the actuator is open. DOOR will be displayed in the LED display.

Ignition Air

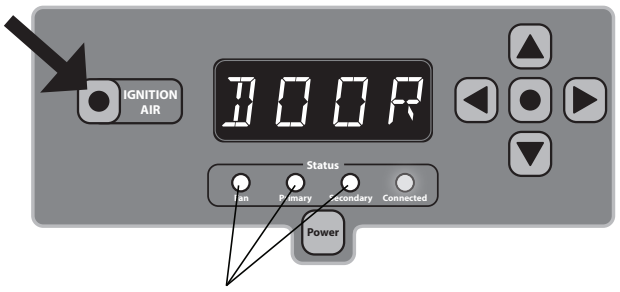

Fan, Primary and Secondary LEDs will be illuminated

OVERVIEW: Press the Ignition Air button with the firebox door open to add air and help ignite a new load of wood.

When pressed with the firebox door open: If the water temperature is below the water temperature setpoint, the primary air actuator will be open significantly and the secondary air actuator will be open slightly. This will provide air to the firebox, helping to ignite a new fuel load. The burn time monitor is also reset. To exit this mode, close the furnace firebox door to allow the furnace to shift into Demand mode.

When pressed with the firebox door closed: If the water temperature is below the water temperature setpoint, the furnace will immediately shift into Demand mode, even if the water temperature has not yet fallen below the water temperature setpoint minus the water temperature differential. The burn time monitor is also reset.

NOTE: Ignition air will not run if the water temperature is at or above the water temperature setpoint. If the Ignition Air button is pressed when the water temperature is above the water temperature setpoint, all that will happen is that the burn time monitor will be reset.

Burn Time Monitor

Accumulated Fan Time Since Last Loading

OVERVIEW: Burn Time is the ***total amount of time the fan has been running*** *for this load of wood. It is not the actual time since you last loaded wood.*

The controller monitors how long the fan has been activated during the current wood load. To view the accumulated fan time for this load, press and hold the LEFT and RIGHT button at the same time. This monitor will reset to 00:00 each time the furnace is loaded with wood (i.e., the firebox door is left open for more than 30 seconds). To manually reset this monitor, press the Ignition Air button.

To learn more about the Burn Time Monitor, visit https://centralboiler.com/support.

Easy Refire Burn Time Limit

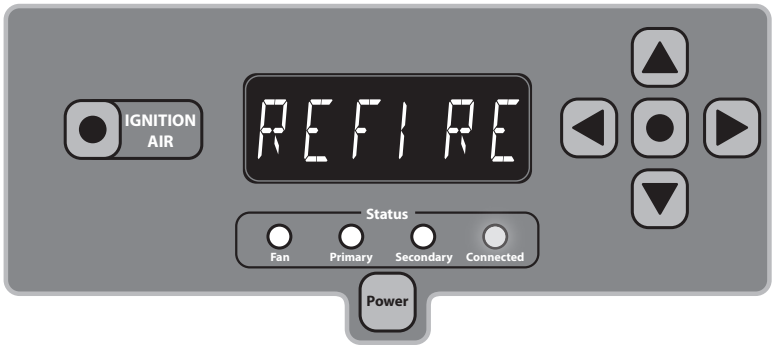

OVERVIEW: The Easy Refire Burn Time Limit feature will cause the controller to go into an Idle mode once it reaches the burn time limit that you choose, which can make it easier to refire once you add another load of wood. This can be a useful feature if you're burning higher moisture wood or if you frequently let your furnace run out of wood.

This feature limits the amount of Burn Time (accumulated fan time since last loading) that is allowed between loadings in an effort to preserve a portion of the current wood load until the next loading. When REFIRE is displayed on the controller, the furnace has limited-out and will remain in Idle state until the furnace is loaded with wood (i.e., the firebox door is left open for more than 30 seconds) or until the Ignition Air button is pressed.

Easy Refire Burn Time Limit is operator-adjustable and should be set to appropriately match the amount of wood that is being loaded into the furnace. It can be disabled by setting the limit below 00:15 minutes so that the controller reads " - - - - ".

To learn more about how to successfully use the Easy Refire Burn Time Limit for your benefit, visit https://centralboiler.com/support.

Basic Controller Features

Adjusting Water Temperature Setpoint

The default setting is 185˚F. To change the water temperature setpoint, press and hold the center MENU button; then press the UP button to raise the water temperature setpoint or the DOWN button to lower the water temperature setpoint. This setpoint can be adjusted from 170˚F to 195˚F. Release all buttons to store the newly adjusted setpoint.

NOTE: To reduce condensation in the firebox, it is recommended to set the Water Temperature Setpoint at or above 185˚F.

NOTE: If the water temperature regularly exceeds the Water Temperature Setpoint, lower the setpoint to avoid over-heating the furnace and losing water though steam or a boil-over.

To Lock/Unlock Controller

The controller can be locked to prevent unauthorized access to the controller settings. **To lock the controller**: Quickly press the LEFT button four times. The LED display will indicate (locked) for several seconds. **To unlock the controller**: Quickly press the LEFT button four times. The LED display will indicate (unlocked) for several seconds.

NOTE: The controller can be locked while it is off. If the controller is locked while it is off, it will have to be unlocked before it can be turned on.

Power Outage

In the event of a power outage, all controller settings will be saved. When power is restored, the controller will continue operating as it was prior to the power outage.

Setup Mode and Adjusting FireStar Settings

The FireStar Combustion Controller provides you with preferences you can adjust.

To Enter Setup Mode

Press and hold the center MENU button for 10 seconds until the LED display changes from the water temperature to 1. The controller is now in Setup Mode. If no buttons are selected before ten seconds, the controller will automatically exit Setup Mode.

Changing Control Preferences

While in Setup Mode, refer to the Preferences Chart and select the control variable you want to change using the UP or DOWN buttons. Press the RIGHT arrow button to select the variable by menu number. Use the UP or DOWN buttons to adjust the variable to the desired setting. Press the center MENU button to save the setting and return to Setup Mode.

To Exit Setup Mode

Wait 10 seconds (without pressing any buttons) and the controller will automatically exit Setup Mode.

To reset controller to default settings:

1. Press the **Power** button to turn off the controller; then, while pressing and holding the **Ignition Air** button, press the **Power** button to turn on the controller. The LED display will momentarily indicate "CS" (clear settings).

2. WAIT a moment while the controller auto-detects the furnace model.

   (If SELECT MODEL is displayed, press the UP or DOWN button to manually select a furnace model; then press the center MENU button to save.)

3. Continue to press the UP button as shown on the display to perform each diagnostic test. The last message will display PRESS UP TO EXIT. Press the UP button and the controller will run using factory default settings.

4. If the furnace was connected to the internet prior to resetting to default settings, it may be necessary to enable wi-fi again by setting Menu Item #8 to a value of 1 (see Setup Mode and Adjusting FireStar Settings).

Preferences Chart

The Preferences Chart displays each user-adjustable variable, its menu number, a brief description, the default setting, and the minimum and maximum values that can be set.

Menu #	Setting	DEFAULT	Min.	Max.
1	**WATER TEMPERATURE DIFFERENTIAL** Normally the water temperature must fall this many degrees below the Water Temperature Setpoint before shifting from Idle into Demand mode. This differential is bypassed if the water temperature is below the Water Temperature Setpoint and either (a) the firebox door is opened and then closed, or (b) the controller is turned off and back on.	20˚F (11˚C)	5	25
2	**IDLE PULSE TIMEOUT** The length of time between air pulses while the controller is in Idle. Before the very first pulse in idle, this timeout length is doubled (60 minutes by default).	30 (minutes)	0	59
3	**MINIMUM PULSE DURATION** The pulse function will operate for at least this long, even if the Reaction Chamber temperature is above the temperature from menu #4 - 225˚F (107˚C).	50 (seconds)	0	255
4	**IDLE PULSE TEMPERATURE** The idle pulse will continue until the temperature in the Reaction Chamber is above this temperature.	225˚F (107˚C)	100	400
5	**REACTION CHAMBER % DISPLAY ENABLED** The furnace's Reaction Chamber % can be manually viewed at any time by pressing and holding the UP button on the FireStar controller. However, when this variable is set to 1, the FireStar controller display will alternate between the water temperature and the Reaction Chamber % without the need to press and hold the UP button. This alternating display will only show while the fan is running (During Demand, Pulse, Vent, etc.).	1	0	1
6	**RESERVED**	1	-	-
7	**RESERVED**	1	-	-
8	**WI-FI ENABLED** After configuration has been performed, use this menu item to disable (or enable) the wi-fi feature without losing your network settings. During a new installation, proceed directly to menu item #9 to enable wi-fi for the first time.	0	0	1
9	**ENABLE WI-FI CONFIGURATION** Setting this to 1 will enable wi-fi and turn on the configuration network. This will erase any current wi-fi settings. When the Connected light turns blue, find the Firestar_network on your smartphone; then visit http://www.wifiset.net to configure your network settings.	0	0	1
10	**WI-FI WIRELESS N SUPPORT ENABLED** When set to 1, the FireStar will be able to use the 5gz frequency (where available). May significantly lower wi-fi range.	0	0	1
11	**RESERVED**	0	0	1

Menu #	Setting	DEFAULT	Min.	Max.
12	**WI-FI NETWORK SSID (READ ONLY)** Displays the current wi-fi network being used by the FireStar. To use a different network, reconfigure the FireStar using menu item #9.	-	-	-
13	**WI-FI SERIAL NUMBER (READ ONLY)** Displays the serial number of the furnace used during wi-fi communication. Typically begins with a letter. An incorrectly entered serial number can be adjusted by visiting http://myfirestar.com/find on a smartphone that is attached to the same wi-fi network as the FireStar.	-	-	-
14	**WI-FI IP ADDRESS (READ ONLY)** Displays the local IP address assigned to your FireStar by your wi-fi router. The FireStar must be successfully connected to wi-fi first. This is a read only item--if a static IP is desired, you must set a reservation on your router by MAC address.	-	-	-
15	**WI-FI CLEAN RELOAD ENABLED** When set to 1, the FireStar will be able to use the Clean Reload feature through the MyFireStar.com site.	0	0	1
16	**SYSTEM TEST** When set to 1, a system test in initiated. During the test, press the UP button as shown on the display to perform each diagnostic test. The last prompt will display PRESS UP TO EXIT. After exiting the test, turn the FireStar off and back on to ensure that the furnace returns to normal operation.	0	0	1
17	**FACTORY HARDWARE CONFIGURATION** Factory use only. Do not adjust.	- (varies)	0	1
18	**LOW WATER TEMPORARY OVERRIDE WATER LEVEL SENSOR** Check the water level at the sight gauge and, if necessary, add water according to the Water Quality and Maintenance section of the Owner's Manual. If adding water does not clear the LOW WATER alarm, set this variable to 1 to ***temporarily*** silence a false LOW WATER level sensor alarm. The controller will operate normally until the next loading (until the firebox door is left open for more than 30 seconds). This will allow operation for one loading (must override each loading) until a repair can be made. Do not override this alarm if the system has a leak. **NOTE: If water is added to the outdoor furnace and/or system, the system water should be tested and corrosion inhibitor should be added (if necessary) to maintain the recommended level of protection (see Owner's Manual).**	0	0	1
19	**ENABLE CELSIUS** When set to 1, all temperatures will be displayed in Celsius. Changing between Fahrenheit and Celsius will cause any custom temperature settings to be reset to the factory default settings.	0	0	1

Menu #	Setting	DEFAULT	Min.	Max.
20	**EASY REFIRE PULSE ENABLED** This setting is only utilized when the optional Easy Refire Burn Time Limit feature (see menu item #21) has also been enabled. When set to 1 and the Easy Refire Burn Time Limit has been met, the Idle Pulse (see menu items #2, #3 and #4) will be used to maintain active coals in the portion of the wood load that is being preserved. When set to 0, no Idle Pulse will be used.	1	0	1
21	**EASY REFIRE BURN TIME LIMIT** This feature allows you to limit the amount of Burn Time (accumulated fan time since last loading) that is allowed between loadings in an effort to preserve a portion of the current wood load until the next loading. Before adjusting this setting, you should have a good understanding of how the Burn Time Monitor works, as well as a good understanding of the amount of wood that is being loaded into the furnace. To disable, set below 00:15 minutes so that the controller reads " - - - - ". To learn more about how to successfully use the Easy Refire Burn Time Limit for your benefit, visit https://centralboiler.com/support.	06:00 (6 hrs)[360] 07:00 (7 hrs)[560] 08:00 (8 hrs)[760] 10:00 (10 hrs)[960]	- - - - (disabled)	99:00 (99 hours, 0 min.)

LED Display Alarm Definitions

The LED display will display an alarm message when abnormal conditions appear. If any of the following messages appear, take corrective action.

FIRE OUT

When the system is calling for heat, if the temperature in the Reaction Chamber has been below 300˚F for 60 minutes and does not rise more than 5˚F, or after three hours even if the temperature is rising, the combustion fan will turn off and the primary air actuator will close. This alarm is reset by opening and closing the furnace door, or by turning the controller off and back on.

HIGH TEMP 1

The temperature sensor connected to the FireStar combustion controller has detected that the water temperature is above 200˚F. The controller will continue to alternate between HIGH TEMP 1 and the water temperature until it senses that the water temperature has fallen below 199˚F.

HIGH TEMP 2

The external high limit sensor has sensed that the water temperature is above 200˚F and has disconnected power to the combustion fan and actuators. The controller will continue to alternate between HIGH TEMP 2 and the water temperature until it senses that the external sensor has reconnected power. This will normally happen when the sensor cools to 165˚F.

LOW WATER

The water level in the furnace has fallen below the level of the water level float switch. This alarm will only clear when the water level is above the float switch. Check the water level at the sight gauge and, if necessary, add water according to the Water Quality and Maintenance section of the Owner's Manual.

NOTE: If water is added to the outdoor furnace and/or system, the system water should be tested and corrosion inhibitor should be added (if necessary) to maintain the recommended level of protection (see Owner's Manual).

REFIRE / REFIRE OUT

The furnace has shut down because the optional Easy Refire Burn Time Limit has been met. This alarm is reset automatically during the next loading (when the firebox door is left open for more than 30 seconds). Pressing the **Ignition Air** button will also reset this alarm.

LOCKED

This will be displayed when any button is pressed while the controller is locked. When the controller is locked, all buttons are disabled. To lock and unlock the control, quickly press the LEFT arrow four times.

UNLOCKED

This will be displayed once after unlocking the controller.

BYPASS

The bypass door is open (if applicable to your model).

DOOR

The firebox door is open.

REACTION DOOR OPEN

The Reaction Chamber door is open (if your model is equipped with a Reaction Chamber door switch).

T-59, T-58, T-57, etc.

The furnace is currently in Idle Mode (no pulse) because the Clean Reload Idle feature has been activated. This T-minus countdown represents the number of minutes remaining before the furnace will resume normal operation.

To learn more about how to successfully use the Clean Reload Idle feature for your benefit, visit https://centralboiler.com/support.

TC1

The thermocouple in the Reaction Chamber outlet is unplugged, is disconnected, or has been damaged. The LED display will flash TC1 to indicate that the system is not operating at optimal efficiency. Contact your dealer.

TC2

The thermocouple in the Reaction Chamber outlet is shorting to ground, has absorbed moisture, or has been damaged. The LED display will flash TC2 to indicate that the system is not operating at optimal efficiency. Continue to operate the furnace. If the alarm does not clear within a few days, contact your dealer.

A-1

The thermocouple in the Reaction Chamber outlet is attempting to gather accurate Reaction Chamber temperature readings. The LED display will flash A-1 to indicate that the system is not operating at optimal efficiency. Wait 5 minutes for the alarm to clear. (You can also power cycle the furnace's main breaker to bypass this delay).

If the alarm recurs, take note of recent Reaction Chamber readings and contact your dealer.

INVALID MODEL

This message indicates that the FireStar controller's model setting does not match the actual furnace model the controller is installed on. The furnace will continue to operate normally (as the invalid model).

Power the controller off and back on to clear this alarm. If the alarm recurs, reset the controller to default settings according to Setup Mode and Adjusting FireStar Settings section.

NOTE: Model detection is performed by looking at the furnace's wiring harness. If the wiring harness has recently been damaged, repaired or replaced, contact your dealer for further assistance troubleshooting this alarm.

STEP FAIL 1, STEP FAIL 2

If the display indicates one of these messages, it indicates a protection fault to one of the stepper motor drives. Power the controller off and back on to clear this alarm. If the alarm recurs, contact your dealer.

EF

The message will indicate that the controller was unable to recover from a memory failure. All settings will be reset to the factory default settings and will not be saved if the controller is turned off or power is interrupted. In the event of a power outage, the controller will not restart when power is restored. Contact your dealer.

Connecting FireStar Combustion Controller to Wi-Fi Network

The FireStar Combustion Controller's integrated wi-fi allows you to connect to your local wi-fi network and take advantage of the online features when you create an online account.

YOUR WIRELESS NETWORK AND FURNACE INFORMATION

Record information about your home's wireless network and your furnace.

_____

Wireless Network Name

_____

Wireless Network Password

_____

Your Furnace Serial Number

CONNECT TO YOUR WI-FI NETWORK

1. Disconnect power to the furnace.
2. Using a 1/4" nut driver or socket, remove the two screws and open the control panel.
3. Remove the round plug on the left side of the control.
4. Install the grommet into the hole.
5. Align the antenna through the grommet and tighten it onto the gold threaded connector installed on the side of the control panel. Take care not to cross-thread the antenna and damage the threads on the connector.
6. Connect power to the furnace and turn on the control.
7. Press and hold the center MENU button until 1 is displayed.
8. Turn on the wi-fi configuration network by pressing the up or down arrow until menu #9 is displayed. Press the RIGHT arrow to display the setting stored in menu #9. Use the UP arrow to change this setting to 1. Press the center MENU button to store this setting. The connected light will start flashing blue.
9. Watch the connection LED as the control enters wi-fi setup mode. When the LED is a steady blue (not flashing), the control is ready to be configured.

10. On a smartphone or other wi-fi enabled device, find the Firestar_XXXX network and connect to it.
11. Using a web browser on the connected device, navigate to www.wifiset.net. You may need to "refresh" your browser a few times before it will load.
12. Your browser will display the FireStar Setup page. Select the wi-fi network SSID you would like to connect to. Select your wi-fi security type and enter your wi-fi password and furnace serial number (SSID and password are case-sensitive).
13. Click the connect button. The control will now turn off the configuration network and attempt to connect to your selected wi-fi network.
14. The connection LED will flash blue while it is attempting to connect. When the LED is a steady green, the control is connected to your network.
15. If the control fails to connect, the connection LED will be steady red. Verify your personal wi-fi network's SSID and password before performing the setup steps again.
16. Visit https://centralboiler.com/support for more detailed "Connecting to Wi-fi" instructions.

MYFIRESTAR.COM ACCOUNT

Create your online account at MyFireStar.com and access information about your furnace from anywhere via your web browser, smartphone or other web-enabled devices.

Record your User Name and Password once you have created them for your MyFireStar.com account.

_____

User Name

_____

Password

NOTES

NOTES

©2020 Central Boiler
(p/n 9000720 - REV. C) • OCT 2020

FIRESTAR®
COMBUSTION CONTROLLER
OPERATION MANUAL

WOODMASTER®

SOFTWARE VERSION 6.8x

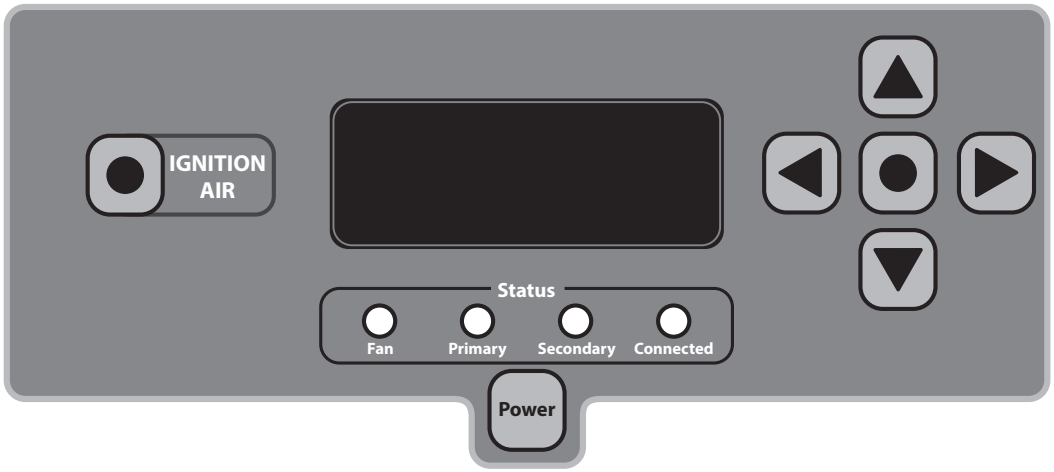

FIRESTAR® with E-Link Technology

For parts and accessories, service or repairs, call your authorized WoodMaster dealer or heating contractor. Record the information below for future reference.

Serial Number	Installation Date
Dealership Name	Phone Number
Owner Name	

MADE IN USA

Save This Manual
For Future Reference

(p/n 9000753) - Rev. B - OCT-2020

Contents

How to Use This Guide

The guide is divided into sections to help with the operation of the FireStar Combustion Controller. If questions arise that are not answered with this manual, consult with your authorized WoodMaster dealer.

Overview **4**
- FireStar Combustion Controller 4

Outdoor Furnace Operation **6**
- Power 6
- Standby/Idle 6
- Idle Pulse 6
- Demand Mode 7
- Idle Transition Mode 8
- Door Open 8
- Ignition Air 9
- Burn Time Monitor 10
- Easy Refire Burn Time Limit 11

Basic Controller Features **12**
- Adjusting Water Temperature Setpoint 12
- To Lock/Unlock Controller 12
- Power Outage 12

Setup Mode and Adjusting FireStar Settings **13**
- To Enter Setup Mode 13
- Changing Control Preferences 13
- To Exit Setup Mode 13
- To reset controller to default settings: 13
- Variables Chart 14

LED Display Alarm Definitions **17**

Connecting FireStar Combustion Controller to Wi-Fi Network **20**

Overview

FireStar Combustion Controller

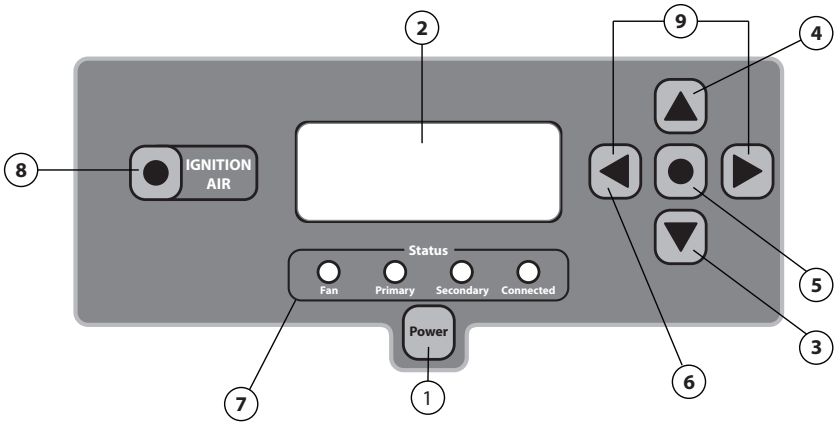

The FireStar Combustion Controller uses a number of sensors and sophisticated programming to optimize the operation of the outdoor furnace. The controller will automatically adjust the amount of primary and secondary air to optimize the gasification process, making the outdoor furnace more efficient and clean burning.

If the controller detects an abnormal condition (for example, the water level is low or the fire has gone out because there is no more wood in the firebox), the controller will display a message to alert you.

Before operating the FireStar Combustion Controller, become familiar with the information the control panel provides and with the procedures for making changes to settings.

How to Check the Controller Software Version Number

Press the Power button to turn the controller off, wait a moment, and then press the Power button again to turn the controller back on. During startup, the current software version number will be displayed, followed by the current furnace model that the controller is installed on.

1. **Power button** - used to turn the FireStar Combustion Controller on and off. It does not disable all electrical power to the furnace.

   To disable electrical power to the furnace: shut the breaker off in the house or wherever the source of power to the furnace is.

   To disable electrical power to the controller: shut off the circuit breaker located in the pump compartment. The circuit breaker in the pump compartment does NOT shut off power to the furnace.

2. **LED display** - displays the furnace water temperature (and the Reaction Chamber % if enabled). Other information will also be displayed on the LED display depending on setting, modes, alarms, warnings, etc.

3. **DOWN arrow button** - if quickly pressed four times, the display will start alternating water temperature and Reaction Chamber % (only alternates when the fan is running).

4. **UP arrow button** - if pressed and held during normal operation, the LED display will show the current Reaction Chamber % (as it relates to the combustion temperature).

5. **Center MENU button** - used to enter the menu system to adjust settings, and to enter changes to those settings when used in combination with the UP and DOWN arrows.

6. **LEFT arrow button** - if pressed and held, it will display the temperature sensed by the optional return water temperature kit. To lock the controller, quickly press the LEFT arrow button four times. LOCK will display on the LED display.

7. **Status indicator LEDs** - display the current state of furnace operation. The Connected LED indicates the status of the controller's wi-fi connection, when enabled.

8. **IGNITION AIR button** - used to bypass the normal door open function. If this button is pressed while the furnace door is open, the primary air actuator will open, helping to light the fire in the firebox.

9. **LEFT arrow button + RIGHT arrow button** - if pressed and held at the same time, it will display the total amount of time the fan has been running for this load of wood.

Outdoor Furnace Operation

Power

OVERVIEW: Turn the FireStar on or off by pressing the Power button. Look for the software version as the controller is turning on.

When the controller is off, the LED display will be off. To turn the controller on or off, press the Power button. Upon startup, the controller will display a number indicating the software version number followed by the furnace model number. Once the controller is on, briefly pressing the Power button will display the software version number. The settings and operation described in this article are for software version 6.8. Other software versions will operate differently.

Standby/Idle

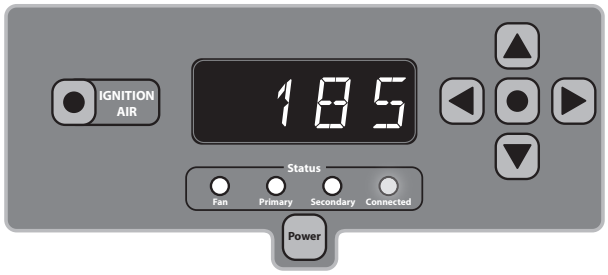

OVERVIEW: Once the water is at the temperature you set, the controller waits until the water temperature drops before entering into one of the burn cycles.

After the water temperature has risen above the Water Temperature Setpoint, the controller will go into Idle. When in Idle, the LED will display the furnace water temperature and the fan, primary and secondary air lights will be off. The connected light may be on, depending on wi-fi connection status.

Idle Pulse

OVERVIEW: When the controller is in idle, it adds a short burst of air occasionally to keep the fire in the coal bed ready.

While in idle, the combustion fan will start and the primary and secondary air actuators will open for a short time every 30 minutes to maintain the coal bed (the initial pulse will wait 60 minutes). Air will continue to flow until the temperature in the Reaction Chamber rises above 225°F.

Demand Mode

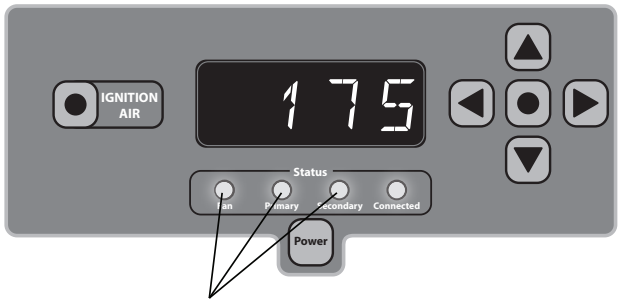

Fan, Primary and Secondary LEDs will be illuminated

OVERVIEW: When the water temperate drops enough, the controller starts to add air, which in turn gets the wood burning, causing the Reaction Chamber temperature to rise.

When the water temperature drops below the Water Temperature Setpoint minus the Water Temperature Differential, the controller will enter Demand Mode. During Demand Mode, the fan, primary and secondary LEDs will be illuminated.

Idle Transition Mode

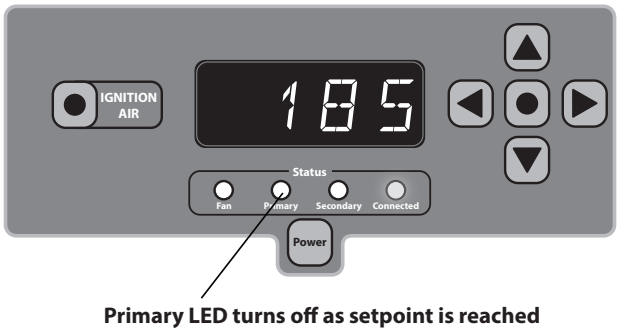

OVERVIEW: Once the water temperature reaches the water temperature you set, the primary air is shut and the secondary air is slowly shut off while burning off the remaining gases.

As the water temperature setpoint is reached in Demand Mode, the primary air actuator will close to stop combustion and the Primary status LED will turn off. The combustion fan will stay on for a while with the secondary air actuator open, and then the fan will shut off. This transition mode allows the combustion process to ramp down and burn off the gasification products before the furnace goes into idle.

Door Open

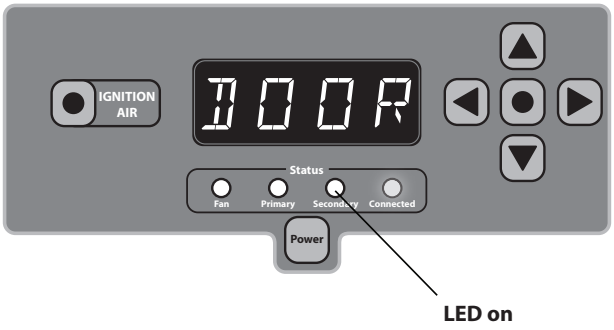

OVERVIEW: Indicates that the firebox door is open. The combustion fan will be running to vent gases from the furnace.

Opening the furnace door automatically places the furnace in Door Open Mode. In this mode, the primary air actuator is closed, the combustion fan is on, and the secondary air actuator is open to continually vent gases from the Reaction Chamber. The Secondary status LED will be illuminated while the actuator is open. DOOR will be displayed in the LED display.

Ignition Air

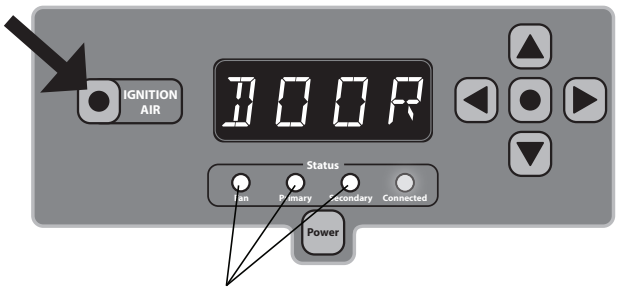

Fan, Primary and Secondary LEDs will be illuminated

OVERVIEW: Press the Ignition Air button with the firebox door open to add air and help ignite a new load of wood.

When pressed with the firebox door open: If the water temperature is below the water temperature setpoint, the primary air actuator will be open significantly and the secondary air actuator will be open slightly. This will provide air to the firebox, helping to ignite a new fuel load. The burn time monitor is also reset. To exit this mode, close the furnace firebox door to allow the furnace to shift into Demand mode.

When pressed with the firebox door closed: If the water temperature is below the water temperature setpoint, the furnace will immediately shift into Demand mode, even if the water temperature has not yet fallen below the water temperature setpoint minus the water temperature differential. The burn time monitor is also reset.

NOTE: Ignition air will not run if the water temperature is at or above the water temperature setpoint. If the Ignition Air button is pressed when the water temperature is above the water temperature setpoint, all that will happen is that the burn time monitor will be reset.

Burn Time Monitor

Accumulated Fan Time Since Last Loading

OVERVIEW: Burn Time is the ***total amount of time the fan has been running*** *for this load of wood. It is not the actual time since you last loaded wood.*

The controller monitors how long the fan has been activated during the current wood load. To view the accumulated fan time for this load, press and hold the LEFT and RIGHT button at the same time. This monitor will reset to 00:00 each time the furnace is loaded with wood (i.e., the firebox door is left open for more than 30 seconds). To manually reset this monitor, press the Ignition Air button.

Easy Refire Burn Time Limit

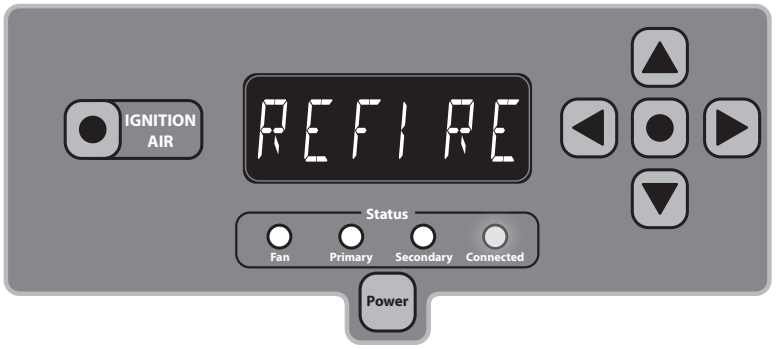

OVERVIEW: The Easy Refire Burn Time Limit feature will cause the controller to go into an Idle mode once it reaches the burn time limit that you choose, which can make it easier to refire once you add another load of wood. This can be a useful feature if you're burning higher moisture wood or if you frequently let your furnace run out of wood.

This feature limits the amount of Burn Time (accumulated fan time since last loading) that is allowed between loadings in an effort to preserve a portion of the current wood load until the next loading. When REFIRE is displayed on the controller, the furnace has limited-out and will remain in Idle state until the furnace is loaded with wood (i.e., the firebox door is left open for more than 30 seconds) or until the Ignition Air button is pressed.

Easy Refire Burn Time Limit is operator-adjustable and should be set to appropriately match the amount of wood that is being loaded into the furnace. It can be disabled by setting the limit below 00:15 minutes so that the controller reads " - - - - ".

Basic Controller Features

Adjusting Water Temperature Setpoint

The default setting is 185˚F. To change the water temperature setpoint, press and hold the center MENU button; then press the UP button to raise the water temperature setpoint or the DOWN button to lower the water temperature setpoint. This setpoint can be adjusted from 170˚F to 195˚F. Release all buttons to store the newly adjusted setpoint.

NOTE: To reduce condensation in the firebox, it is recommended to set the Water Temperature Setpoint at or above 185˚F.

NOTE: If the water temperature regularly exceeds the Water Temperature Setpoint, lower the setpoint to avoid over-heating the furnace and losing water though steam or a boil-over.

To Lock/Unlock Controller

The controller can be locked to prevent unauthorized access to the controller settings. **To lock the controller**: Quickly press the LEFT button four times. The LED display will indicate (locked) for several seconds. **To unlock the controller**: Quickly press the LEFT button four times. The LED display will indicate (unlocked) for several seconds.

NOTE: The controller can be locked while it is off. If the controller is locked while it is off, it will have to be unlocked before it can be turned on.

Power Outage

In the event of a power outage, all controller settings will be saved. When power is restored, the controller will continue operating as it was prior to the power outage.

Setup Mode and Adjusting FireStar Settings

The FireStar Combustion Controller provides you with preferences you can adjust.

To Enter Setup Mode

Press and hold the center MENU button for 10 seconds until the LED display changes from the water temperature to 1. The controller is now in Setup Mode. If no buttons are selected before ten seconds, the controller will automatically exit Setup Mode.

Changing Control Preferences

While in Setup Mode, refer to the Preferences Chart and select the control variable you want to change using the UP or DOWN buttons. Press the RIGHT arrow button to select the variable by menu number. Use the UP or DOWN buttons to adjust the variable to the desired setting. Press the cener MENU button to save the setting and return to Setup Mode.

To Exit Setup Mode

Wait 10 seconds (without pressing any buttons) and the controller will automatically exit Setup Mode.

To reset controller to default settings:

1. Press the **Power** button to turn off the controller; then, while pressing and holding the **Ignition Air** button, press the **Power** button to turn on the controller. The LED display will momentarily indicate "CS" (clear settings).

2. WAIT a moment while the controller auto-detects the furnace model.

   (If SELECT MODEL is displayed, press the UP or DOWN button to manually select a furnace model; then press the center MENU button to save.)

3. Continue to press the UP button as shown on the display to perform each diagnostic test. The last message will display PRESS UP TO EXIT. Press the UP button and the controller will run using factory default settings.

4. If the furnace was connected to the internet prior to resetting to default settings, it may be necessary to enable wi-fi again by setting Menu Item #8 to a value of 1 (see Setup Mode and Adjusting FireStar Settings).

Preferences Chart

The Preferences Chart displays each user-adjustable variable, its menu number, a brief description, the default setting, and the minimum and maximum values that can be set.

Menu #	Setting	DEFAULT	Min.	Max.
1	**WATER TEMPERATURE DIFFERENTIAL** Normally the water temperature must fall this many degrees below the Water Temperature Setpoint before shifting from Idle into Demand mode. This differential is bypassed if the water temperature is below the Water Temperature Setpoint and either (a) the firebox door is opened and then closed, or (b) the controller is turned off and back on.	20˚F (11˚C)	5	25
2	**IDLE PULSE TIMEOUT** The length of time between air pulses while the controller is in Idle. Before the very first pulse in idle, this timeout length is doubled (60 minutes by default).	30 (minutes)	0	59
3	**MINIMUM PULSE DURATION** The pulse function will operate for at least this long, even if the Reaction Chamber temperature is above the temperature from menu #4 - 225˚F (107˚C).	50 (seconds)	0	255
4	**IDLE PULSE TEMPERATURE** The idle pulse will continue until the temperature in the Reaction Chamber is above this temperature.	225˚F (107˚C)	100	400
5	**REACTION CHAMBER % DISPLAY ENABLED** The furnace's Reaction Chamber % can be manually viewed at any time by pressing and holding the UP button on the FireStar controller. However, when this variable is set to 1, the FireStar controller display will alternate between the water temperature and the Reaction Chamber % without the need to press and hold the UP button. This alternating display will only show while the fan is running (During Demand, Pulse, Vent, etc.).	1	0	1
6	**RESERVED**	1	-	-
7	**RESERVED**	1	-	-
8	**WI-FI ENABLED** After configuration has been performed, use this menu item to disable (or enable) the wi-fi feature without losing your network settings. During a new installation, proceed directly to menu item #9 to enable wi-fi for the first time.	0	0	1
9	**ENABLE WI-FI CONFIGURATION** Setting this to 1 will enable wi-fi and turn on the configuration network. This will erase any current wi-fi settings. When the Connected light turns blue, find the Firestar_network on your smartphone; then visit http://www.wifiset.net to configure your network settings.	0	0	1
10	**WI-FI WIRELESS N SUPPORT ENABLED** When set to 1, the FireStar will be able to use the 5gz frequency (where available). May significantly lower wi-fi range.	0	0	1
11	**RESERVED**	0	0	1

Menu #	Setting	DEFAULT	Min.	Max.
12	**WI-FI NETWORK SSID (READ ONLY)** Displays the current wi-fi network being used by the FireStar. To use a different network, reconfigure the FireStar using menu item #9.	-	-	-
13	**WI-FI SERIAL NUMBER (READ ONLY)** Displays the serial number of the furnace used during wi-fi communication. Typically begins with a letter. An incorrectly entered serial number can be adjusted by visiting http://myfirestar.com/find on a smartphone that is attached to the same wi-fi network as the FireStar.	-	-	-
14	**WI-FI IP ADDRESS (READ ONLY)** Displays the local IP address assigned to your FireStar by your wi-fi router. The FireStar must be successfully connected to wi-fi first. This is a read only item--if a static IP is desired, you must set a reservation on your router by MAC address.	-	-	-
15	**WI-FI CLEAN RELOAD ENABLED** When set to 1, the FireStar will be able to use the Clean Reload feature through the MyFireStar.com site.	0	0	1
16	**SYSTEM TEST** When set to 1, a system test in initiated. During the test, press the UP button as shown on the display to perform each diagnostic test. The last prompt will display PRESS UP TO EXIT. After exiting the test, turn the FireStar off and back on to ensure that the furnace returns to normal operation.	0	0	1
17	**FACTORY HARDWARE CONFIGURATION** Factory use only. Do not adjust.	- (varies)	0	1
18	**LOW WATER TEMPORARY OVERRIDE WATER LEVEL SENSOR** Check the water level at the sight gauge and, if necessary, add water according to the Water Quality and Maintenance section of the Owner's Manual. If adding water does not clear the LOW WATER alarm, set this variable to 1 to ***temporarily*** silence a false LOW WATER level sensor alarm. The controller will operate normally until the next loading (until the firebox door is left open for more than 30 seconds). This will allow operation for one loading (must override each loading) until a repair can be made. Do not override this alarm if the system has a leak. **NOTE: If water is added to the outdoor furnace and/or system, the system water should be tested and MolyArmor 350 should be added (if necessary) to maintain the recommended level of protection.**	0	0	1
19	**ENABLE CELSIUS** When set to 1, all temperatures will be displayed in Celsius. Changing between Fahrenheit and Celsius will cause any custom temperature settings to be reset to the factory default settings.	0	0	1

Menu #	Setting	DEFAULT	Min.	Max.
20	**EASY REFIRE PULSE ENABLED** This setting is only utilized when the optional Easy Refire Burn Time Limit feature (see menu item #21) has also been enabled. When set to 1 and the Easy Refire Burn Time Limit has been met, the Idle Pulse (see menu items #2, #3 and #4) will be used to maintain active coals in the portion of the wood load that is being preserved. When set to 0, no Idle Pulse will be used.	1	0	1
21	**EASY REFIRE BURN TIME LIMIT** This feature allows you to limit the amount of Burn Time (accumulated fan time since last loading) that is allowed between loadings in an effort to preserve a portion of the current wood load until the next loading. Before adjusting this setting, you should have a good understanding of how the Burn Time Monitor works, as well as a good understanding of the amount of wood that is being loaded into the furnace. To disable, set below 00:15 minutes so that the controller reads " - - - - ".	06:00 (6 hrs)[300] 07:00 (7 hrs)[500] 08:00 (8 hrs)[700] 10:00 (10 hrs)[900]	- - - - (disabled)	99:00 (99 hours, 0 min.)

LED Display Alarm Definitions

The LED display will display an alarm message when abnormal conditions appear. If any of the following messages appear, take corrective action.

FIRE OUT

When the system is calling for heat, if the temperature in the Reaction Chamber has been below 300˚F for 60 minutes and does not rise more than 5˚F, or after three hours even if the temperature is rising, the combustion fan will turn off and the primary air actuator will close. This alarm is reset by opening and closing the furnace door, or by turning the controller off and back on.

HIGH TEMP 1

The temperature sensor connected to the FireStar combustion controller has detected that the water temperature is above 200˚F. The controller will continue to alternate between HIGH TEMP 1 and the water temperature until it senses that the water temperature has fallen below 199˚F.

HIGH TEMP 2

The external high limit sensor has sensed that the water temperature is above 200˚F and has disconnected power to the combustion fan and actuators. The controller will continue to alternate between HIGH TEMP 2 and the water temperature until it senses that the external sensor has reconnected power. This will normally happen when the sensor cools to 165˚F.

LOW WATER

The water level in the furnace has fallen below the level of the water level float switch. This alarm will only clear when the water level is above the float switch. Check the water level at the sight gauge and, if necessary, add water according to the Water Quality and Maintenance section of the Owner's Manual.

NOTE: If water is added to the outdoor furnace and/or system, the system water should be tested and MolyArmor 350 should be added (if necessary) to maintain the recommended level of protection.

REFIRE / REFIRE OUT

The furnace has shut down because the optional Easy Refire Burn Time Limit has been met. This alarm is reset automatically during the next loading (when the firebox door is left open for more than 30 seconds). Pressing the **Ignition Air** button will also reset this alarm.

LOCKED

This will be displayed when any button is pressed while the controller is locked. When the controller is locked, all buttons are disabled. To lock and unlock the control, quickly press the LEFT arrow four times.

UNLOCKED

This will be displayed once after unlocking the controller.

BYPASS

The bypass door is open (if applicable to your model).

DOOR

The firebox door is open.

REACTION DOOR OPEN

The Reaction Chamber door is open (if your model is equipped with a Reaction Chamber door switch).

T-59, T-58, T-57, etc.

The furnace is currently in Idle Mode (no pulse) because the Clean Reload Idle feature has been activated. This T-minus countdown represents the number of minutes remaining before the furnace will resume normal operation.

TC1

The thermocouple in the Reaction Chamber outlet is unplugged, is disconnected, or has been damaged. The LED display will flash TC1 to indicate that the system is not operating at optimal efficiency. Contact your dealer.

TC2

The thermocouple in the Reaction Chamber outlet is shorting to ground, has absorbed moisture, or has been damaged. The LED display will flash TC2 to indicate that the system is not operating at optimal efficiency. Continue to operate the furnace. If the alarm does not clear within a few days, contact your dealer.

A-1

The thermocouple in the Reaction Chamber outlet is attempting to gather accurate Reaction Chamber temperature readings. The LED display will flash A-1 to indicate that the system is not operating at optimal efficiency. Wait 5 minutes for the alarm to clear. (You can also power cycle the furnace's main breaker to bypass this delay).

If the alarm recurs, take note of recent Reaction Chamber readings and contact your dealer.

INVALID MODEL

This message indicates that the FireStar controller's model setting does not match the actual furnace model the controller is installed on. The furnace will continue to operate normally (as the invalid model).

Power the controller off and back on to clear this alarm. If the alarm recurs, reset the controller to default settings according to Setup Mode and Adjusting FireStar Settings section.

NOTE: Model detection is performed by looking at the furnace's wiring harness. If the wiring harness has recently been damaged, repaired or replaced, contact your dealer for further assistance troubleshooting this alarm.

STEP FAIL 1, STEP FAIL 2

If the display indicates one of these messages, it indicates a protection fault to one of the stepper motor drives. Power the controller off and back on to clear this alarm. If the alarm recurs, contact your dealer.

EF

The message will indicate that the controller was unable to recover from a memory failure. All settings will be reset to the factory default settings and will not be saved if the controller is turned off or power is interrupted. In the event of a power outage, the controller will not restart when power is restored. Contact your dealer.

Connecting FireStar Combustion Controller to Wi-Fi Network

The FireStar Combustion Controller's integrated wi-fi allows you to connect to your local wi-fi network and take advantage of the online features when you create an online account.

YOUR WIRELESS NETWORK AND FURNACE INFORMATION

Record information about your home's wireless network and your furnace.

_____

Wireless Network Name

_____

Wireless Network Password

_____

Your Furnace Serial Number

CONNECT TO YOUR WI-FI NETWORK

1. Disconnect power to the furnace.
2. Using a 1/4" nut driver or socket, remove the two screws and open the control panel.
3. Remove the round plug on the left side of the control.
4. Install the grommet into the hole.
5. Align the antenna through the grommet and tighten it onto the gold threaded connector installed on the side of the control panel. Take care not to cross-thread the antenna and damage the threads on the connector.
6. Connect power to the furnace and turn on the control.
7. Press and hold the center MENU button until 1 is displayed.
8. Turn on the wi-fi configuration network by pressing the up or down arrow until menu #9 is displayed. Press the RIGHT arrow to display the setting stored in menu #9. Use the UP arrow to change this setting to 1. Press the center MENU button to store this setting. The connected light will start flashing blue.
9. Watch the connection LED as the control enters wi-fi setup mode. When the LED is a steady blue (not flashing), the control is ready to be configured.

10. On a smartphone or other wi-fi enabled device, find the Firestar_XXXX network and connect to it.
11. Using a web browser on the connected device, navigate to www.wifiset.net. You may need to "refresh" your browser a few times before it will load.
12. Your browser will display the FireStar Setup page. Select the wi-fi network SSID you would like to connect to. Select your wi-fi security type and enter your wi-fi password and furnace serial number (SSID and password are case-sensitive).
13. Click the connect button. The control will now turn off the configuration network and attempt to connect to your selected wi-fi network.
14. The connection LED will flash blue while it is attempting to connect. When the LED is a steady green, the control is connected to your network.
15. If the control fails to connect, the connection LED will be steady red. Verify your personal wi-fi network's SSID and password before performing the setup steps again.

MYFIRESTAR.COM ACCOUNT

Create your online account at MyFireStar.com and access information about your furnace from anywhere via your web browser, smartphone or other web-enabled devices.

Record your User Name and Password once you have created them for your MyFireStar.com account.

_____

User Name

_____

Password

NOTES

NOTES

©2020 WoodMaster
(p/n 9000753 - REV. B) • OCT-2020

Section 4

Test Data by Run

Hydronic Heating Appliances - Test Method ASTM 2618
Conditioning

Manufacturer:	Central Boiler - WoodMaster
Model:	Edge 960 - CleanFire 900
Tracking No.:	2430
Project No.:	0117WB041E
Test Date:	2020
Technician:	Central Boiler
Operation Category:	CAT I - CAT II
Stove Weight (lb):	2714
Water Weight (lb):	3425

Elapsed Time (hr)	Scale Reading	Flue Gas Temp (degrees F)
0	400.1	137.0
1	354.7	191.0
2	354.7	197.0
3	329.6	144.0
4	315.7	284.0
5	278.5	135.0
6	278.4	287.0
7	239.0	216.0
8	239.0	137.0
9	201.0	268.0
10	189.0	136.0
11	160.0	269.0
12	126.5	138.0
13	122.5	260.0
14	87.0	140.0
15	87.0	244.0
16	58.8	141.0
17	55.0	226.0
18	34.0	144.0
19	14.0	188.0
20	12.1	148.0
21	0.0	122.0
22	400.1	151.0
23	391.0	123.0
24	370.0	149.0
25	347.9	188.0
26	306.7	146.0
27	302.1	247.0
28	258.1	136.0
29	258.0	159.0
30	215.6	276.0
31	215.0	146.0
32	176.6	291.0
33	176.7	141.0
34	145.1	296.0
35	145.2	142.0
36	119.1	130.0
37	111.6	275.0
38	95.5	144.0
39	77.1	133.0
40	72.7	140.0
41	55.4	160.0
42	54.4	133.0
43	42.3	125.0
44	36.2	183.0
45	27.4	145.0
46	129.4	135.0
47	75.5	293.0
48	363.0	140.0
49	348.6	129.0
50	299.3	289.0

Fuel was added during seasoning runs to keep the unit in operation.

Operated for 50 hours at a medium heat draw.

ASTM 2618 Test Standard

Manufacturer:	Central Boiler - WoodMaster
Model:	Edge 960 - CleanFire 900
Tracking No.:	2430
Project No.:	0117WB041E
Technician:	BD, TT
Comments:	

Adjustable Parameters:	Category I	Category II	Category III	Category IV
Run Number:	3	4	2	1
Test Date:	12/14/20	12/21/20	12/10/20	12/9/20
Total Fuel Weight (lb):	389.5	387.9	390.2	389.8
Average Moisture of Fuel (% dry):	20.7	21.7	21.2	21.0
Average Temperature of Appliance Water at Start of Test:	160.7	157.2	151.2	157.2
Average Temperature of Appliance Water at End of Test:	158.4	178.7	164.2	157.2
Average Thermopile Reading:	116.8	119.0	118.1	116.1
Average Load Side Liquid Flow Rate (gal/min):	0.8	1.5	3.1	6.5
Time Interval (min):	3100	1538	728	368
Burn Rate (kg/hr):	2.83	5.64	12.03	23.82
Emissions (g):	69.5	51.2	70.1	73.4

Constant Parameters:

Fuel Heating Value:	8600	Btu/lb	Higher Heating Value
Heating Season Weighting			
Category I Weighting Factor:	0.175		
Category II Weighting Factor:	0.275		
Category III Weighting Factor:	0.450		
Category IV Weighting Factor:	0.100		
Year Round Use Weighting			
Category I Weighting Factor:	0.437		
Category II Weighting Factor:	0.238		
Category III Weighting Factor:	0.275		
Category IV Weighting Factor:	0.050		

Calculations:	Category I	Category II	Category III	Category IV	Totals
Heat Input (Btu):	2774295	2740968	2768316	2770253	
Heat Input Rate (Btu/hr):	53696	106930	228158	451672	
Appliance Water Specific Heat (Btu/lb °F):	1.001	1.001	1.001	1.001	
Heat Output (Btu):	2447330	2306118	2294524	2320480	
Heat Output Rate (Btu/hr):	47368	89966	189109	378339	
Total Particulate Emissions (g):	69.5	51.2	70.1	73.4	
Time Interval (hr):	51.7	25.6	12.1	6.1	
Emissions (g/kg):	0.5	0.4	0.5	0.5	
Heating Season Weighting:	0.083	0.097	0.216	0.050	0.4
Year Round Use Weighting:	0.208	0.084	0.132	0.025	0.4
Total Particulate Emissions Rate (g/MJ):	0.03	0.02	0.03	0.03	
Heating Season Weighting:	0.005	0.006	0.013	0.003	0.03
Year Round Use Weighting:	0.012	0.005	0.008	0.001	0.03
Total Particulate Emissions Rate (lbs/mmbtu input):	0.06	0.04	0.06	0.06	
Heating Season Weighting:	0.010	0.011	0.025	0.006	0.05
Year Round Use Weighting:	0.024	0.010	0.015	0.003	0.05
Total Particulate Emissions Rate (lbs/mmbtu output):	0.063	0.049	0.067	0.070	
Heating Season Weighting:	0.011	0.013	0.030	0.007	0.06
Year Round Use Weighting:	0.027	0.012	0.019	0.003	0.06
Total Particulate Emissions Rate (g/hr 10,000BTU):	0.01	0.01	0.03	0.05	
Heating Season Weighting:	0.001	0.002	0.011	0.005	0.02
Year Round Use Weighting:	0.002	0.002	0.007	0.003	0.01
Emissions (g/hr):	1.3	2.0	5.8	12.0	
Heating Season Weighting:	0.24	0.55	2.60	1.20	4.6
Year Round Use Weighting:	0.59	0.48	1.59	0.60	3.3
Efficiency (%):	88.2	84.1	82.9	83.8	
Heating Season Weighting:	15.4	23.1	37.3	8.4	84.2
Year Round Use Weighting:	38.5	20.0	22.8	4.2	85.6
First Hour Emissions (g/hr):	23.3	4.8	10.1	16.7	
Target Load High:	56751	90801	189170	378339	
Target Load Low:	NA	60534	94585	NA	

Weighted Emissions

Heating Season Use:	0.05 lbs/mmbtu input	**8 Hr Burn Load**		**8 Hr Efficiency Rating**		
Year Round Use:	0.05 lbs/mmbtu input	X1 =	189109	X1 =	82.9	
		Y1 =	12.1	Y1 =	12.1	
Heating Season Use:	0.06 lbs/mmbtu output	X2 =	378339	X2 =	83.8	
Year Round Use:	0.06 lbs/mmbtu output	Y2 =	6.1	Y2 =	6.1	

Weighted Efficiency

Heating Season Use:	84.2 %	8 Hr Burn Load =	319468	Btu/hr
Year Round Use:	85.6 %	8 Hr Efficiency =	83.5	%

Run 1

Hydronic Heating Appliances - Test Method ASTM 2618
Results

Manufacturer: Central Boiler - WoodMaster
Model: Edge 960 - CleanFire 900
Tracking No.: 2430
Project No.: 0117WB041E
Run: 1
Test Date: December 9, 2020

Burn Rate	**23.82 kg/hr dry**
Average Tunnel Temperature	105 degrees F
Average Gas Velocity in Dilution Tunnel - vs	14.3 feet/second
Average Gas Flow Rate in Dilution Tunnel - Qsd	37545 dscf/hour
Average Delta p	0.045 inches H20
Average Delta H	1.29 inches H20
Total Time of Test	368 minutes

PARTICULATE EMISSIONS RESULTS

First Hour:	**16.70** g/hr **0.52** g/kg **0.10** lb/mmBTU output
Complete Run:	**11.97** g/hr **0.50** g/kg **0.07** lb/mmBTU output

	SAMPLE TRAIN 1	SAMPLE TRAIN 2	AMBIENT SAMPLE TRAIN
Total Sample Volume - Vm	57.18 cubic feet	56.02 cubic feet	113.46 cubic feet
Average Gas Meter Temperature	71 degrees F	72 degrees F	68 degrees F
Total Sample Volume (Standard Conditions) - Vmstd	58.6 dscf	56.4 dscf	111.8 dscf
Total Particulates - mn	19.8 mg	17.2 mg	0.3 mg
Particulate Concentration (dry-standard)	0.00034 grams/dscf	0.00030 grams/dscf	0.000003 grams/dscf
Particulate Emissions	77.23 grams	69.60 grams	
Difference from Average	3.82 grams	3.82 grams	

Results Are Acceptable

AVERAGE

Total Sample Volume - Vm	56.60 cubic feet
Average Gas Meter Temperature	72 degrees F
Total Sample Volume (Standard Conditions) - Vmstd	57.5 dscf
Particulate Concentration (dry-standard)	0.00032 grams/dscf
Particulate Emissions	73.41 grams
7.5% of the average particulate emissions	5.51 grams

ADDITIONAL ACCEPTANCE CRITERIA

Boiler Water Return Temperature >120 °F	**Acceptable**
Proportional Rate Variation >80%	**Not Acceptable**
90% of PR Values between 90-110%	**Acceptable**
Train Precision < 7.5%	**7.80**
G/kg ≤ 0.5	**0.50**

SAMPLE TRAIN 1 - FIRST HOUR

Total Sample Volume - Vm	9.11 cubic feet
Average Gas Meter Temperature	69 degrees F
Total Sample Volume (Standard Conditions) - Vmstd	9.38 dscf
Total Particulates - mn	4.2 mg
Particulate Concentration (dry-standard)	0.00045 grams/dscf
Particulate Emissions	16.70 grams
Burn Rate	31.90 (dry kg/hr)
Heat Output Rate	357399 BTU/hr

Hydronic Heating Appliances - Test Method ASTM 2618
Test Data

Run: 1

Manufacturer: Central Boiler - WoodMaster
Model: Edge 960 - CleanFire 900
Tracking No.: 2430
Project No.: 0117WB041E
Test Date: December 9, 2020
Technician: BD, TT
Beginning Clock Time: 17:00
Recording Interval: 1 min.
Total Sampling Time: 368 min.

Velocity Traverse Data

	Pt.1	Pt.2	Pt.3	Pt.4	Pt.5	Pt.6	Pt.7	Pt.8	Pt.9	Pt.10	Pt.11	Pt.12	Center	
Initial dP	0.044	0.050	0.054	0.052	0.045	0.038	0.042	0.046	0.052	0.052	0.050	0.036	0.048	"H2O
Initial Temp.	110	108	110	111	111	111	111	111	111	111	111	111	109	oF

Air Velocity: Initial: <50 Final: <50 V_{strav} 14.76 ft/sec
Scale Audit: Pre: 10.0 Post: 10.0 Induced Draft: 0 V_{scent} 14.96 ft/sec
Pitot Tube Leak Test: Pre: 0 Post: 0 % Smoke Capture: 100 F_p 0.986
Flue Pipe Cleaned Prior to First Test in Series: Date: 12/8/2020

PM Control Module: 335, 336
Dilution Tunnel MW(dry): 29.00 lb/lb-mole
Dilution Tunnel MW(wet): 28.78 lb/lb-mole
Dilution Tunnel H2O: 2.00 percent
Dilution Tunnel Static: -0.516 "H2O
Pitot Tube Cp: 0.99

Meter Box Y Factor:	(1) 1.013	(2) 0.997	(amb) 0.97

Barometric Pressure:	Begin	Middle	End	Average
	30.40	30.37	30.34	30.37 "Hg

Tunnel Velocity: 14.30 ft/sec.
Intial Tunnel Flow: 628.5 scfm
Average Tunnel Flow: 625.7 scfm
Tunnel Area: 0.785 ft2
Post-Test Leak Check (1): 0.000 cfm @ 10 in. Hg
Post-Test Leak Check (2): 0.000 cfm @ 8 in. Hg
Fuel Moisture (dry basis %): 21.0
Total Particulate (1): 19.8
Total Particulate (2): 17.2

Elapsed Time	Particulate Sampling Data																Fuel Weight, lb		Flow, gpm		Temperature Data, oF											
	Gas Meter Cubic Feet (1)	Gas Meter Cubic Feet (2)	Gas Meter Cubic Feet (amb)	Sample Rate, cfm (1)	Sample Rate, cfm (2)	Orifice dH (1)	Orifice dH (2)	Orifice dH (amb)	Meter oF (1)	Meter oF (2)	Meter oF (amb)	Meter Vac. In. Hg. (1)	Meter Vac. In. Hg. (2)	Dilution Tunnel Temp.	Dilution Tunnel dP	Pro. Rate (%) (1)	Pro. Rate (%) (2)	Scale Reading	Weight Change	Load Side Liquid Flow Rate	Boiler Side Liquid Flow Rate (optional)	Thermopile ΔT	Boiler to Heat Exch. Temp.	Heat Exch to Boiler Temp.	Inlet Load Temp.	Outlet Load Temp.	Stack	Filter (1)	Filter (2)	Ambient	Stack Draft	Specific Heat of Inlet Water (BTU/lb-°F)	Mass Flow Rate of Inlet Water (lb/min)	Heat Output, Btu
0	0.000	0.000	0.000			0.98	0.90	0.38	67	66	70	2.45	1.30	106	0.046			389.8		6.39	15.3	119.2	181.3	133.1	51.7	170.9	306	61	61	70	0.050			
1	0.154	0.147		0.15	0.15	1.39	1.06	0.38	67	67	70	2.65	1.40	82	0.043	101	98	387.6	2.20	6.47	15.4	119.1	181.2	133.3	51.8	170.9	274	62	62	70	0.046	1.001	53.919	6432
2	0.314	0.302		0.16	0.16	1.38	1.05	0.38	67	67	70	2.62	1.40	78	0.048	99	97	386.4	1.20	6.41	15.4	118.5	180.7	132.9	51.8	170.3	253	63	62	70	0.045	1.001	53.430	6340
3	0.473	0.458		0.16	0.16	1.04	1.03	0.38	67	67	70	2.22	1.50	103	0.045	103	104	384.5	1.88	6.49	15.3	117.6	179.6	132.5	51.8	169.4	289	67	66	70	0.058	1.001	54.116	6372
4	0.629	0.612		0.16	0.15	1.33	1.05	0.38	67	67	70	2.59	1.50	104	0.047	99	100	383.1	1.45	6.41	15.4	117.1	179.1	131.9	51.8	168.9	298	68	68	70	0.053	1.001	53.473	6270
5	0.785	0.768		0.16	0.16	1.32	1.04	0.38	67	67	70	2.61	1.50	102	0.047	99	101	382.5	0.56	6.76	15.3	117.4	179.4	132.1	51.8	169.1	296	69	68	70	0.056	1.001	56.343	6622
6	0.941	0.922		0.16	0.15	1.31	1.04	0.38	67	67	70	2.59	1.50	104	0.043	104	105	380.2	2.32	6.33	15.4	116.8	178.7	131.9	51.8	168.6	300	70	69	70	0.053	1.001	52.784	6175
7	1.096	1.077		0.16	0.16	1.31	1.03	0.38	67	67	70	2.61	1.50	104	0.048	98	100	380.1	0.11	6.54	15.4	117.0	179.0	131.9	51.8	168.8	298	70	69	70	0.057	1.001	54.558	6391
8	1.253	1.230		0.16	0.15	1.30	1.03	0.38	67	67	70	2.60	1.50	102	0.043	104	104	378.1	2.03	6.41	15.4	116.6	178.5	131.6	51.8	168.3	297	71	70	70	0.054	1.001	53.427	6236
9	1.408	1.384		0.16	0.15	1.30	1.02	0.38	67	67	70	2.63	1.50	104	0.047	99	100	376.6	1.46	6.37	15.4	116.4	178.3	131.5	51.8	168.1	300	72	70	70	0.055	1.001	53.119	6189
10	1.563	1.538		0.16	0.15	1.31	1.02	0.38	67	67	70	2.61	1.50	101	0.044	102	103	376.4	0.23	6.18	15.4	116.3	178.2	131.5	51.8	168.0	297	72	71	70	0.052	1.001	51.529	5999
11	1.718	1.690		0.16	0.15	1.30	1.01	0.38	67	67	70	2.63	1.50	106	0.046	100	100	375.1	1.25	6.31	15.4	116.6	178.2	131.9	51.8	168.3	302	73	72	70	0.055	1.001	52.640	6143
12	1.874	1.844		0.16	0.15	1.30	1.01	0.38	68	67	70	2.62	1.60	107	0.049	97	98	373.1	1.96	6.52	15.4	116.1	178.1	131.3	51.8	167.9	305	74	73	70	0.056	1.001	54.382	6323
13	2.028	1.996		0.15	0.15	1.29	1.01	0.38	68	67	70	2.63	1.60	107	0.049	96	97	371.9	1.24	6.49	15.5	116.0	177.9	131.3	51.8	167.7	305	74	73	70	0.057	1.001	54.136	6287
14	2.182	2.148		0.15	0.15	1.29	1.00	0.38	68	68	70	2.64	1.60	107	0.048	97	98	370.3	1.58	6.60	15.4	115.7	177.7	131.1	51.8	167.5	306	75	73	70	0.059	1.001	55.061	6380
15	2.337	2.300		0.16	0.15	1.29	0.99	0.38	68	68	70	2.65	1.60	107	0.045	101	101	369.0	1.32	6.49	15.3	115.6	177.5	131.1	51.8	167.4	306	75	74	70	0.054	1.001	54.105	6264
16	2.492	2.451		0.16	0.15	1.11	1.01	0.38	68	68	70	2.54	1.60	107	0.047	99	98	368.6	0.35	6.39	15.4	116.4	177.6	132.2	51.7	168.2	306	75	74	70	0.056	1.001	53.281	6211
17	2.648	2.604		0.16	0.15	1.29	1.05	0.38	68	68	70	2.72	1.70	107	0.048	98	99	366.4	2.29	6.58	15.4	115.9	177.7	131.2	51.8	167.6	305	76	75	70	0.058	1.001	54.908	6369
18	2.805	2.760		0.16	0.16	1.32	1.05	0.38	68	68	70	2.77	1.70	107	0.048	99	101	365.9	0.49	6.73	15.5	115.0	177.0	130.5	51.8	166.7	305	76	75	70	0.056	1.001	56.088	6457
19	2.961	2.914		0.16	0.15	1.30	1.04	0.38	68	68	70	2.79	1.70	107	0.047	99	100	364.6	1.22	6.27	15.4	115.2	177.1	130.8	51.8	167.0	305	76	75	70	0.055	1.001	52.302	6032
20	3.117	3.069		0.16	0.16	1.30	1.00	0.38	68	68	70	2.80	1.80	107	0.044	103	104	363.4	1.22	6.59	15.4	114.7	176.7	130.5	51.8	166.5	304	77	75	70	0.055	1.001	54.917	6309
21	3.272	3.220		0.16	0.15	1.30	1.01	0.38	68	68	70	2.79	1.80	107	0.048	98	97	361.4	2.07	6.51	15.4	114.7	176.6	130.3	51.8	166.4	304	77	76	70	0.057	1.001	54.267	6230
22	3.427	3.373		0.16	0.15	1.30	1.01	0.38	68	68	70	2.80	1.80	107	0.047	99	100	360.7	0.67	6.41	15.4	114.9	176.7	130.6	51.8	166.6	304	77	76	70	0.057	1.001	53.453	6148
23	3.583	3.526		0.16	0.15	1.29	1.01	0.38	69	69	70	2.81	1.80	107	0.045	101	102	359.9	0.83	6.51	15.4	115.0	176.8	130.7	51.8	166.8	304	77	76	70	0.058	1.001	54.263	6250
24	3.737	3.677		0.15	0.15	1.29	0.99	0.38	69	69	70	2.84	1.80	108	0.043	103	103	358.0	1.86	6.74	15.4	114.4	176.3	130.2	51.8	166.1	306	78	76	70	0.056	1.001	56.201	6435
25	3.891	3.829		0.15	0.15	1.29	0.99	0.38	69	69	70	2.83	1.80	108	0.045	100	101	355.8	2.21	6.39	15.3	114.5	176.4	130.4	51.8	166.3	306	78	77	70	0.057	1.001	53.292	6112
26	4.047	3.980		0.16	0.15	1.30	1.00	0.38	69	69	70	2.83	1.80	108	0.045	102	100	355.3	0.49	6.66	15.4	114.4	176.2	130.3	51.8	166.2	306	78	77	70	0.056	1.001	55.555	6364
27	4.197	4.132		0.15	0.15	1.31	1.01	0.38	69	69	70	3.04	1.80	108	0.044	99	102	354.4	0.95	6.42	15.4	114.2	176.1	130.1	51.8	166.0	306	78	77	70	0.055	1.001	53.513	6119
28	4.354	4.277		0.16	0.15	1.34	0.44	0.38	69	69	70	3.11	9.80	108	0.045	102	96	352.5	1.85	6.59	15.4	114.1	176.0	130.0	51.8	165.8	306	78	75	70	0.057	1.001	54.923	6274
29	4.511	4.374		0.16	0.10	1.33	0.94	0.38	69	69	70	3.12	4.60	108	0.045	102	64	350.8	1.66	6.58	15.4	114.1	175.9	130.0	51.7	165.8	306	78	74	70	0.057	1.001	54.903	6270
30	4.669	4.527		0.16	0.15	1.33	0.99	0.38	69	69	70	3.14	1.80	108	0.046	102	101	349.0	1.83	6.60	15.3	114.0	175.9	129.9	51.8	165.7	306	79	74	70	0.056	1.001	55.074	6285
31	4.826	4.680		0.16	0.15	1.32	1.02	0.38	69	70	70	3.12	1.80	108	0.043	105	104	348.6	0.44	6.62	15.4	113.8	175.6	129.9	51.8	165.5	306	79	75	70	0.059	1.001	55.231	6292
32	4.974	4.833		0.15	0.15	0.38	1.02	0.38	69	70	70	8.89	1.80	108	0.047	94	99	346.8	1.74	6.47	15.4	114.0	175.9	130.0	51.8	165.8	306	78	75	70	0.055	1.001	53.942	6158
33	5.041	4.987		0.07	0.15	0.32	1.02	0.38	69	70	70	10.48	1.80	108	0.046	43	101	345.6	1.25	6.02	15.5	114.3	175.7	130.4	51.8	166.1	306	76	75	70	0.057	1.001	50.223	5748
34	5.145	5.136		0.10	0.15	0.79	0.96	0.38	69	70	70	7.19	2.00	108	0.046	67	98	342.9	2.62	6.70	15.3	114.0	175.7	129.9	51.8	165.7	306	73	75	70	0.055	1.001	55.851	6373
35	5.267	5.287		0.12	0.15	0.76	1.10	0.38	70	70	70	7.35	2.20	108	0.047	78	98	342.2	0.72	6.53	15.3	113.7	175.6	129.7	51.8	165.5	306	74	75	70	0.056	1.001	54.482	6203
36	5.357	5.447		0.09	0.16	1.53	1.09	0.38	70	70	70	2.99	2.30	108	0.042	61	110	340.2	2.04	6.56	15.3	114.0	175.9	129.9	51.8	165.7	306	3218	76	70	0.057	1.001	54.705	6242
37	5.512	5.604		0.15	0.16	1.29	1.08	0.38	70	70	70	2.69	2.30	108	0.042	104	108	338.7	1.52	6.55	15.4	113.6	175.4	129.8	51.8	165.4	307	75	76	70	0.054	1.001	54.655	6217
38	5.668	5.763		0.16	0.16	1.31	1.08	0.38	70	70	70	2.70	2.30	108	0.046	100	104	337.8	0.88	6.78	15.4	113.4	175.2	129.6	51.8	165.2	307	75	76	70	0.056	1.001	56.520	6420
39	5.824	5.922		0.16	0.16	1.30	1.08	0.38	70	70	70	2.72	2.30	109	0.046	100	104	336.2	1.56	6.56	15.4	113.4	175.3	129.6	51.7	165.2	307	76	76	70	0.057	1.001	54.746	6217
40	5.980	6.079		0.16	0.16	1.30	1.08	0.38	70	71	70	2.72	2.30	109	0.048	98	101	334.5	1.77	6.68	15.4	113.3	175.1	129.5	51.7	165.0	308	76	76	70	0.055	1.001	55.713	6317
41	6.135	6.238		0.15	0.16	1.30	1.07	0.38	70	71	70	2.72	2.30	109	0.046	100	104	333.1	1.40	6.53	15.4	113.4	175.2	129.6	51.7	165.1	308	76	76	70	0.056	1.001	54.427	6178
42	6.291	6.394		0.16	0.16	1.30	1.06	0.38	70	71	70	2.72	2.30	109	0.048	98	100	330.8	2.27	6.59	15.4	113.1	174.9	129.4	51.7	164.8	309	77	76	70	0.056	1.001	54.942	6221
43	6.447	6.551		0.16	0.16	1.28	1.06	0.38	70	71	70	2.79	2.40	109	0.045	101	104	330.0	0.83	6.53	15.4	113.1	175.0	129.4	51.7	164.9	309	77	77	70	0.058	1.001	54.420	6165
44	6.602	6.707		0.16	0.16	1.32	1.05	0.38	70	71	69	2.85	2.40	109	0.047	99	101	328.0	1.96	6.43	15.3	113.4	175.2	129.6	51.7	165.2	310	77	77	69	0.054	1.001	53.631	6090
45	6.759	6.837		0.16	0.13	1.32	0.15	0.38	70	71	69	2.85	8.40	109	0.044	103	87	326.6	1.37	6.58	15.4	113.2	175.1	129.5	51.7	164.9	311	78	76	69	0.057	1.001	54.915	6224
46	6.915	6.927		0.16	0.09	1.32	0.62	0.38	71	71	69	2.86	8.40	108	0.044	102	60	325.8	0.79	6.68	15.5	113.2	175.0	129.5	51.7	164.9	308	78	75	69	0.055	1.001	55.721	6316

Elapsed Time	Particulate Sampling Data																	Fuel Weight, lb		Flow, gpm		Temperature Data, oF										Stack Draft			
	Gas Meter Cubic Feet (1)	Gas Meter Cubic Feet (2)	Gas Meter Cubic Feet (amb)	Sample Rate, cfm (1)	Sample Rate, cfm (2)	Orifice dH (1)	Orifice dH (2)	Orifice dH (amb)	Meter oF (1)	Meter oF (2)	Meter oF (amb)	Meter Vac. In. Hg. (1)	Meter Vac. In. Hg. (2)	Dilution Tunnel Temp.	Dilution Tunnel dP	Pro. Rate (%) (1)	Pro. Rate (%) (2)	Scale Reading	Weight Change	Load Side Liquid Flow Rate	Boiler Side Liquid Flow Rate (optional)	Thermopile ΔT	Boiler to Heat Exch. Temp.	Heat Exch to Boiler Temp.	Inlet Load Temp.	Outlet Load Temp.	Stack	Filter (1)	Filter (2)	Ambient		Specific Heat of Inlet Water (BTU/lb-°F)	Mass Flow Rate of Inlet Water (lb/min)	Heat Output, Btu
47	7.072	7.061		0.16	0.13	1.31	1.02	0.38	71	71	69	2.88	1.20	109	0.044	103	90	324.1	1.74	6.37	15.3	113.3	175.1	129.6	51.7	165.0	309	78	74	69	0.053	1.001	53.127	6025
48	7.229	7.215		0.16	0.15	1.30	1.01	0.38	71	71	70	2.90	1.80	109	0.049	98	98	322.4	1.67	6.64	15.4	113.2	174.9	129.5	51.7	164.9	309	78	75	70	0.054	1.001	55.390	6277
49	7.385	7.368		0.16	0.15	1.31	1.02	0.38	71	71	69	2.89	1.80	109	0.047	99	99	320.8	1.65	6.56	15.4	113.1	174.8	129.4	51.7	164.8	310	78	76	69	0.057	1.001	54.739	6197
50	7.541	7.521		0.16	0.15	1.31	1.01	0.38	71	71	69	2.90	1.80	109	0.047	99	99	319.6	1.21	6.55	15.4	113.2	175.0	129.5	51.7	165.0	310	78	76	69	0.056	1.001	54.599	6190
51	7.697	7.676		0.16	0.16	1.31	1.00	0.38	71	71	69	2.91	1.80	109	0.046	100	102	317.7	1.87	6.32	15.4	113.1	174.8	129.4	51.7	164.8	310	78	76	69	0.055	1.001	52.674	5963
52	7.854	7.828		0.16	0.15	1.29	1.01	0.38	71	72	69	2.93	1.80	109	0.045	102	101	316.8	0.89	6.45	15.4	114.3	175.0	131.3	51.7	166.0	310	78	76	69	0.056	1.001	53.758	6153
53	8.009	7.981		0.16	0.15	1.65	1.00	0.38	71	72	69	2.92	1.90	109	0.047	98	99	314.9	1.92	6.79	15.3	113.1	174.9	129.3	51.7	164.8	311	75	76	69	0.058	1.001	56.623	6409
54	8.165	8.133		0.16	0.15	1.24	1.00	0.38	71	72	70	2.73	1.90	109	0.046	100	99	313.0	1.92	6.66	15.4	114.6	175.2	131.5	51.7	166.3	311	76	77	70	0.055	1.001	55.561	6374
55	8.322	8.285		0.16	0.15	1.35	0.99	0.38	71	72	69	2.83	1.90	108	0.047	100	98	311.5	1.46	6.58	15.4	114.4	175.2	131.3	51.7	166.1	309	77	76	69	0.058	1.001	54.912	6290
56	8.481	8.439		0.16	0.15	1.35	1.01	0.38	71	72	69	2.83	1.90	109	0.048	100	99	310.5	1.01	6.39	15.4	113.2	175.1	129.4	51.7	164.9	310	77	76	69	0.054	1.001	53.296	6039
57	8.640	8.591		0.16	0.15	1.34	1.00	0.38	71	72	69	2.86	2.00	109	0.044	104	102	309.4	1.14	6.51	15.3	113.2	175.0	129.4	51.7	164.9	311	77	77	69	0.059	1.001	54.263	6148
58	8.799	8.735		0.16	0.14	1.34	0.29	0.38	71	72	69	2.85	5.50	109	0.046	102	94	307.6	1.74	6.49	15.4	113.3	175.1	129.4	51.7	165.0	311	78	76	69	0.054	1.001	54.112	6137
59	8.956	8.856		0.16	0.12	1.32	1.07	0.38	71	72	69	2.91	1.30	108	0.042	105	83	305.8	1.86	6.57	15.4	113.1	175.0	129.3	51.7	164.8	310	79	74	69	0.056	1.001	54.763	6201
60	9.112	9.015		0.16	0.16	1.31	1.06	0.38	71	72	69	2.92	2.10	109	0.046	100	104	304.7	1.05	6.47	15.4	113.4	175.3	129.6	51.7	165.1	309	79	75	69	0.056	1.001	53.995	6132
61	9.269	9.173		0.16	0.16	1.50	1.09	0.38	71	72	69	2.40	2.10	109	0.046	101	103	303.1	1.61	6.65	15.4	113.3	175.0	129.4	51.7	165.0	309	66	75	69	0.055	1.001	55.419	6286
62	9.432	9.332		0.16	0.16	1.37	1.08	0.38	71	72	69	2.78	2.10	109	0.044	107	106	302.0	1.13	6.57	15.3	113.5	175.3	129.6	51.7	165.2	310	62	75	69	0.055	1.001	54.755	6221
63	9.592	9.491		0.16	0.16	1.37	1.07	0.38	72	72	69	2.76	2.10	108	0.045	104	105	299.7	2.29	6.58	15.4	113.1	174.9	129.4	51.7	164.8	310	61	75	69	0.056	1.001	54.911	6218
64	9.752	9.649		0.16	0.16	1.36	1.07	0.38	72	72	69	2.78	2.10	108	0.044	105	106	298.5	1.19	6.55	15.4	113.7	175.6	129.8	51.7	165.4	310	61	75	69	0.056	1.001	54.591	6213
65	9.912	9.806		0.16	0.16	1.37	1.03	0.38	72	72	69	2.77	2.20	109	0.044	105	105	296.9	1.58	6.62	15.4	113.2	175.0	129.5	51.7	164.9	310	61	76	69	0.054	1.001	55.230	6261
66	10.072	9.960		0.16	0.15	1.36	1.02	0.38	72	72	69	2.79	2.20	109	0.042	107	105	295.9	1.02	6.62	15.3	113.3	175.1	129.5	51.7	165.0	310	60	76	69	0.056	1.001	55.196	6262
67	10.232	10.115		0.16	0.15	1.35	1.01	0.38	72	72	69	2.79	2.30	109	0.046	103	101	293.8	2.06	6.57	15.3	113.3	175.1	129.5	51.7	164.9	311	60	77	69	0.057	1.001	54.754	6210
68	10.391	10.268		0.16	0.15	1.34	1.01	0.38	72	72	69	2.79	2.30	109	0.045	103	101	292.8	1.06	6.56	15.4	113.4	175.2	129.5	51.7	165.1	310	60	77	69	0.055	1.001	54.706	6211
69	10.549	10.422		0.16	0.15	1.33	1.01	0.38	72	72	69	2.79	2.30	108	0.043	105	104	291.8	1.00	6.70	15.4	113.6	175.4	129.6	51.7	165.2	310	60	77	69	0.053	1.001	55.842	6350
70	10.707	10.575		0.16	0.15	1.34	1.00	0.38	72	72	69	2.80	2.30	108	0.046	101	100	289.3	2.48	6.47	15.4	113.4	175.2	129.5	51.7	165.0	310	60	77	69	0.055	1.001	53.941	6122
71	10.865	10.727		0.16	0.15	1.33	0.99	0.38	72	72	69	2.82	2.30	108	0.047	100	98	288.0	1.31	6.43	15.4	113.2	175.0	129.4	51.7	164.9	309	60	77	69	0.054	1.001	53.626	6077
72	11.023	10.880		0.16	0.15	1.33	1.01	0.38	72	72	69	2.83	2.30	108	0.041	107	106	286.9	1.08	6.64	15.4	113.7	175.4	130.0	51.7	165.4	309	60	77	69	0.057	1.001	55.400	6307
73	11.181	11.035		0.16	0.15	1.32	1.06	0.38	72	72	69	2.86	2.40	108	0.042	106	106	285.2	1.71	6.45	15.3	113.6	175.3	129.8	51.7	165.3	309	60	77	69	0.056	1.001	53.782	6119
74	11.339	11.189		0.16	0.15	1.32	1.01	0.38	72	72	69	2.86	2.30	108	0.049	98	98	283.3	1.85	6.45	15.3	113.6	175.2	129.7	51.6	165.2	309	60	77	69	0.055	1.001	53.818	6119
75	11.496	11.343		0.16	0.15	1.32	1.02	0.38	72	72	69	2.89	2.30	108	0.043	104	104	282.5	0.80	6.52	15.3	113.8	175.5	129.8	51.6	165.4	310	60	77	69	0.058	1.001	54.335	6190
76	11.652	11.496		0.16	0.15	1.32	1.02	0.38	72	72	69	2.90	2.30	108	0.045	101	101	281.9	0.68	6.64	15.3	113.5	175.3	129.7	51.6	165.2	310	60	77	69	0.055	1.001	55.383	6295
77	11.809	11.650		0.16	0.15	1.31	1.01	0.38	72	72	69	2.90	2.30	108	0.043	104	104	280.5	1.40	6.33	15.4	113.7	175.5	129.8	51.6	165.4	310	60	77	69	0.055	1.001	52.754	6008
78	11.965	11.804		0.16	0.15	1.31	1.06	0.38	72	72	69	2.91	1.30	108	0.045	101	102	278.7	1.77	6.68	15.3	113.6	175.3	129.7	51.7	165.2	310	60	74	69	0.054	1.001	55.718	6335
79	12.122	11.953		0.16	0.15	1.29	1.07	0.38	72	72	69	2.94	1.30	107	0.041	106	103	277.0	1.65	6.18	15.4	114.4	175.6	130.7	51.6	166.1	308	60	73	69	0.055	1.001	51.500	5900
80	12.278	12.109		0.16	0.16	1.28	1.08	0.38	72	72	69	2.94	1.80	108	0.046	100	102	275.7	1.36	6.29	15.4	114.4	175.5	130.8	51.6	166.1	309	60	74	69	0.053	1.001	52.476	6013
81	12.433	12.268		0.15	0.16	1.28	1.08	0.38	72	73	69	2.97	1.80	107	0.048	97	102	274.5	1.14	6.58	15.4	113.6	175.5	129.5	51.6	165.2	308	60	75	69	0.052	1.001	54.900	6243
82	12.588	12.427		0.15	0.16	1.28	1.09	0.38	72	73	69	3.00	1.80	107	0.045	100	105	273.5	1.05	6.58	15.4	113.5	175.5	129.4	51.6	165.2	307	60	75	69	0.056	1.001	54.888	6240
83	12.741	12.598		0.15	0.17	1.49	1.04	0.38	72	73	69	3.23	1.70	107	0.042	102	117	271.9	1.57	6.54	15.3	113.7	175.5	129.7	51.6	165.3	308	60	75	69	0.055	1.001	54.512	6205
84	12.898	12.755		0.16	0.16	1.30	1.04	0.38	72	73	69	3.07	1.80	107	0.046	100	102	269.9	2.02	6.44	15.4	113.6	175.4	129.7	51.6	165.2	307	60	75	69	0.053	1.001	53.730	6112
85	13.054	12.910		0.16	0.15	1.29	1.03	0.38	72	73	69	3.08	1.80	107	0.046	100	101	268.8	1.07	6.58	15.4	113.6	175.4	129.6	51.6	165.1	308	60	75	69	0.056	1.001	54.898	6242
86	13.209	13.065		0.15	0.15	1.29	1.02	0.38	72	73	69	3.11	1.80	105	0.047	98	100	267.4	1.48	6.37	15.4	113.6	175.4	129.6	51.6	165.2	305	60	75	69	0.055	1.001	53.114	6040
87	13.361	13.219		0.15	0.15	1.32	1.00	0.38	72	73	69	2.20	1.90	107	0.045	98	102	266.7	0.67	6.47	15.4	113.6	175.5	129.5	51.6	165.2	308	73	75	69	0.056	1.001	53.927	6132
88	13.519	13.370		0.16	0.15	1.20	0.98	0.38	72	73	69	2.52	1.90	107	0.046	101	98	266.0	0.72	6.62	15.4	113.5	175.4	129.5	51.6	165.1	308	61	75	69	0.055	1.001	55.226	6278
89	13.675	13.521		0.16	0.15	1.32	0.96	0.38	72	73	69	2.76	1.90	107	0.046	100	98	263.6	2.32	6.64	15.4	113.9	175.7	129.8	51.6	165.5	309	60	75	69	0.055	1.001	55.373	6316
90	13.833	13.673		0.16	0.15	1.33	0.99	0.38	72	73	69	2.77	2.00	106	0.044	103	101	261.3	2.32	6.58	15.4	113.7	175.6	129.6	51.6	165.3	307	60	75	69	0.055	1.001	54.901	6252
91	13.992	13.824		0.16	0.15	1.33	0.99	0.38	72	73	69	2.76	2.00	105	0.046	102	98	261.0	0.29	6.35	15.3	113.7	175.4	129.6	51.6	165.3	306	60	75	69	0.052	1.001	52.936	6024
92	14.149	13.976		0.16	0.15	1.32	0.98	0.38	72	73	69	2.76	2.00	106	0.044	103	101	259.5	1.55	6.46	15.4	113.5	175.2	129.6	51.6	165.1	307	60	75	69	0.056	1.001	53.850	6118
93	14.307	14.128		0.16	0.15	1.31	0.98	0.38	72	73	69	2.77	2.00	105	0.044	103	101	258.8	0.70	6.56	15.4	113.7	175.5	129.7	51.6	165.3	305	60	75	69	0.053	1.001	54.746	6231
94	14.464	14.279		0.16	0.15	1.27	1.03	0.38	72	73	69	2.92	2.10	107	0.045	102	100	256.9	1.83	6.10	15.4	113.8	175.3	129.8	51.6	165.3	308	60	75	69	0.055	1.001	50.865	5793
95	14.621	14.434		0.16	0.15	1.34	1.02	0.38	72	73	69	3.05	2.20	107	0.049	97	98	255.1	1.80	6.45	15.4	114.1	175.5	130.4	51.6	165.7	308	60	75	69	0.057	1.001	53.772	6145
96	14.779	14.588		0.16	0.15	1.33	1.01	0.38	72	73	69	3.06	2.20	107	0.046	101	100	254.2	0.94	6.58	15.4	113.9	175.7	129.7	51.6	165.4	309	60	75	69	0.054	1.001	54.905	6259
97	14.937	14.741		0.16	0.15	1.33	0.99	0.38	72	73	69	3.09	2.20	107	0.043	105	103	252.4	1.84	6.49	15.4	113.3	175.1	129.4	51.6	164.9	309	60	75	69	0.054	1.001	54.090	6138
98	15.094	14.893		0.16	0.15	1.31	0.98	0.38	72	73	69	3.10	2.30	107	0.049	97	96	251.9	0.45	6.60	15.4	113.9	175.7	129.9	51.6	165.5	310	60	75	69	0.055	1.001	55.072	6282
99	15.251	15.043		0.16	0.15	1.30	1.02	0.38	72	73	68	3.15	2.50	107	0.043	104	101	249.7	2.23	6.46	15.4	114.0	175.7	129.8	51.6	165.5	310	60	74	68	0.054	1.001	53.862	6146
100	15.406	15.197		0.16	0.15	1.30	1.00	0.38	72	73	69	3.18	2.50	107	0.043	103	104	248.4	1.29	6.40	15.4	113.8	175.5	129.6	51.5	165.3	310	60	74	69	0.056	1.001	53.389	6081
101	15.563	15.350		0.16	0.15	1.29	0.94	0.38	73	73	69	3.21	2.80	107	0.041	106	106	247.2	1.18	6.54	15.4	114.0	175.8	129.7	51.5	165.5	310	60	74	69	0.058	1.001	54.579	6229
102	15.717	15.500		0.15	0.15	1.27	0.97	0.38	73	73	69	3.25	1.30	108	0.045	100	99	246.3	0.91	6.62	15.5	113.9	175.8	129.8	51.6	165.5	310	60	73	69	0.057	1.001	55.229	6300
103	15.871	15.651		0.15	0.15	1.26	1.00	0.38	73	73	69	3.29	2.10	107	0.042	103	103	244.4	1.87	6.64	15.4	113.9	175.7	129.8	51.5	165.4	310	60	74	69	0.054	1.001	55.393	6317
104	16.028	15.804		0.16	0.15	1.31	0.98	0.38	73	73	69	3.51	2.20	108	0.044	103	102	242.7	1.69	6.43	15.3	114.2	176.0	129.9	51.5	165.8	311	60	75	69	0.060	1.001	53.618	6132
105	16.181	15.955		0.15	0.15	1.57	0.98	0.38	73	73	68	2.53	2.20	107	0.043	101	102	242.5	0.26	6.56	15.4	114.2	176.0	129.9	51.5	165.7	308	74	75	68	0.055	1.001	54.744	6260
106	16.337	16.107		0.16	0.15	1.27	0.99	0.38	73	73	68	2.16	2.20	107	0.046	100	99	240.5	2.03	6.41	15.3	114.1	175.9	129.8	51.5	165.6	308	62	74	68	0.056	1.001	53.449	6104
107	16.491	16.261		0.15	0.15	1.32	1.00	0.38	73	73	68	2.88	2.10	107	0.039	107	109	239.5	0.93	6.48	15.3	114.2	175.9	130.1	51.5	165.8	308	60	74	68	0.055	1.001	54.082	6186

Elapsed Time	Particulate Sampling Data																Fuel Weight, lb		Flow, gpm		Temperature Data, oF										Stack Draft	Specific Heat of Inlet Water (BTU/lb-°F)	Mass Flow Rate of Inlet Water (lb/min)	Heat Output, Btu
	Gas Meter Cubic Feet (1)	Gas Meter Cubic Feet (2)	Gas Meter Cubic Feet (amb)	Sample Rate, cfm (1)	Sample Rate, cfm (2)	Orifice dH (1)	Orifice dH (2)	Orifice dH (amb)	Meter oF (1)	Meter oF (2)	Meter oF (amb)	Meter Vac. In. Hg. (1)	Meter Vac. In. Hg. (2)	Dilution Tunnel Temp.	Dilution Tunnel dP	Pro. Rate (%) (1)	Pro. Rate (%) (2)	Scale Reading	Weight Change	Load Side Liquid Flow Rate	Boiler Side Liquid Flow Rate (optional)	Thermopile ΔT	Boiler to Heat Exch. Temp.	Heat Exch to Boiler Temp.	Inlet Load Temp.	Outlet Load Temp.	Stack	Filter (1)	Filter (2)	Ambient				
108	16.649	16.413		0.16	0.15	1.33	1.00	0.38	73	73	68	2.88	2.20	107	0.045	102	100	237.8	1.69	6.48	15.4	113.9	175.7	129.8	51.5	165.5	308	60	74	68	0.056	1.001	54.057	6166

Elapsed Time	Particulate Sampling Data																	Fuel Weight, lb		Flow, gpm		Temperature Data, oF												
	Gas Meter Cubic Feet (1)	Gas Meter Cubic Feet (2)	Gas Meter Cubic Feet (amb)	Sample Rate, cfm (1)	Sample Rate, cfm (2)	Orifice dH (1)	Orifice dH (2)	Orifice dH (amb)	Meter oF (1)	Meter oF (2)	Meter oF (amb)	Meter Vac. In. Hg. (1)	Meter Vac. In. Hg. (2)	Dilution Tunnel Temp.	Dilution Tunnel dP	Pro. Rate (%) (1)	Pro. Rate (%) (2)	Scale Reading	Weight Change	Load Side Liquid Flow Rate	Boiler Side Liquid Flow Rate (optional)	Thermopile ΔT	Boiler to Heat Exch. Temp.	Heat Exch to Boiler Temp.	Inlet Load Temp.	Outlet Load Temp.	Stack	Filter (1)	Filter (2)	Ambient	Stack Draft	Specific Heat of Inlet Water (BTU/lb-°F)	Mass Flow Rate of Inlet Water (lb/min)	Heat Output, Btu
109	16.808	16.565		0.16	0.15	1.32	0.99	0.38	73	73	68	2.87	2.20	107	0.041	108	105	236.6	1.21	6.41	15.5	114.2	176.0	129.9	51.5	165.7	307	60	74	68	0.055	1.001	53.456	6111
110	16.966	16.718		0.16	0.15	1.33	0.99	0.38	73	73	68	2.87	2.20	107	0.045	102	101	235.2	1.46	6.24	15.4	114.2	176.0	129.9	51.5	165.7	307	60	74	68	0.054	1.001	51.999	5944
111	17.123	16.869		0.16	0.15	1.32	1.19	0.38	73	73	68	2.88	1.60	106	0.047	99	97	233.9	1.30	6.57	15.4	114.1	175.9	129.8	51.5	165.7	307	60	73	68	0.053	1.001	54.754	6258
112	17.281	17.022		0.16	0.15	1.32	1.00	0.38	73	73	68	2.89	2.40	106	0.045	102	101	233.0	0.90	6.29	15.3	114.0	175.8	129.9	51.5	165.6	306	60	74	68	0.055	1.001	52.484	5993
113	17.438	17.174		0.16	0.15	1.33	1.00	0.38	73	73	68	2.90	2.40	106	0.045	101	100	232.2	0.74	6.57	15.5	114.1	175.9	129.8	51.5	165.6	307	60	74	68	0.055	1.001	54.755	6257
114	17.596	17.326		0.16	0.15	1.28	0.99	0.38	73	73	68	3.02	2.50	106	0.046	101	99	230.4	1.78	6.56	15.4	114.0	175.7	129.9	51.5	165.5	307	60	74	68	0.054	1.001	54.744	6251
115	17.751	17.479		0.16	0.15	1.27	0.98	0.38	73	73	68	3.07	2.50	106	0.048	97	98	228.8	1.68	6.66	15.4	114.0	175.7	129.9	51.5	165.5	308	60	74	68	0.053	1.001	55.558	6342
116	17.904	17.630		0.15	0.15	1.26	0.98	0.38	73	73	68	3.07	2.50	107	0.048	96	96	227.3	1.44	6.44	15.3	114.2	176.0	129.9	51.5	165.7	309	60	74	68	0.054	1.001	53.717	6143
117	18.061	17.780		0.16	0.15	1.29	0.97	0.38	73	73	68	3.13	2.50	107	0.048	98	96	226.3	1.02	6.47	15.3	114.1	175.8	129.7	51.5	165.6	310	60	74	68	0.054	1.001	53.948	6161
118	18.217	17.931		0.16	0.15	1.28	0.96	0.38	73	73	68	3.15	2.60	107	0.051	95	94	225.0	1.29	6.55	15.4	114.4	176.2	130.1	51.5	165.9	309	60	74	68	0.055	1.001	54.588	6255
119	18.371	18.086		0.15	0.15	1.27	0.98	0.38	73	73	68	3.16	2.70	107	0.047	97	100	223.7	1.35	6.74	15.3	114.2	175.9	130.0	51.5	165.7	309	60	74	68	0.053	1.001	56.203	6425
120	18.526	18.237		0.16	0.15	1.28	0.98	0.38	73	73	68	3.16	2.70	107	0.045	100	100	221.4	2.26	6.51	15.4	114.5	176.2	130.1	51.5	166.0	309	60	74	68	0.053	1.001	54.268	6220
121	18.680	18.388		0.15	0.15	1.27	0.97	0.38	73	73	68	3.18	2.70	106	0.045	99	99	220.8	0.61	6.60	15.3	114.4	176.1	130.1	51.5	165.9	309	60	73	68	0.053	1.001	55.069	6307
122	18.835	18.540		0.16	0.15	1.26	0.96	0.38	73	73	68	3.21	2.80	106	0.045	100	100	219.7	1.07	6.24	15.4	114.4	176.2	130.1	51.5	165.9	308	60	73	68	0.056	1.001	52.000	5959
123	18.987	18.691		0.15	0.15	1.24	1.00	0.38	73	73	68	3.25	3.00	106	0.044	99	101	217.5	2.20	6.46	15.4	114.6	176.3	130.2	51.5	166.1	308	59	73	68	0.055	1.001	53.875	6181
124	19.143	18.836		0.16	0.15	1.24	0.95	0.38	73	73	68	3.31	3.20	106	0.046	100	94	216.5	1.04	6.47	15.4	114.6	176.4	130.1	51.5	166.1	307	59	74	68	0.055	1.001	53.928	6187
125	19.300	18.996		0.16	0.16	1.31	1.27	0.38	73	73	68	3.49	1.40	106	0.047	99	103	215.7	0.80	6.57	15.4	114.5	176.2	130.2	51.5	166.0	307	59	72	68	0.053	1.001	54.755	6279
126	19.449	19.145		0.15	0.15	1.27	1.08	0.38	73	73	68	3.61	1.30	105	0.049	92	94	213.8	1.91	6.60	15.4	114.5	176.1	130.2	51.5	166.0	306	60	72	68	0.053	1.001	55.071	6314
127	19.608	19.308		0.16	0.16	1.13	1.11	0.38	73	73	68	2.01	1.20	106	0.045	103	107	212.7	1.06	6.72	15.5	114.6	176.4	130.2	51.5	166.1	306	72	71	68	0.056	1.001	56.041	6433
128	19.768	19.464		0.16	0.16	1.35	1.12	0.38	73	73	68	2.25	1.20	105	0.045	103	103	211.9	0.82	6.58	15.3	114.6	176.2	130.3	51.5	166.1	305	59	70	68	0.056	1.001	54.915	6302
129	19.928	19.614		0.16	0.15	1.36	0.98	0.38	73	73	68	2.23	2.80	107	0.046	102	98	211.8	0.13	6.39	15.3	114.8	176.5	130.3	51.5	166.2	308	60	70	68	0.056	1.001	53.291	6124
130	20.067	19.768		0.14	0.15	1.36	1.04	0.38	73	73	68	2.21	3.80	106	0.045	90	101	209.0	2.80	6.25	15.3	114.3	175.9	130.1	51.4	165.7	308	70	71	68	0.055	1.001	52.159	5969
131	20.215	19.922		0.15	0.15	0.67	1.01	0.38	73	73	68	6.83	3.90	108	0.046	95	101	208.6	0.40	6.51	15.3	115.0	176.7	130.4	51.4	166.4	310	60	72	68	0.055	1.001	54.321	6252
132	20.372	20.076		0.16	0.15	1.32	1.00	0.38	73	73	68	2.18	3.90	108	0.046	100	101	206.8	1.78	6.54	15.5	114.7	176.4	130.2	51.4	166.1	312	70	72	68	0.053	1.001	54.539	6261
133	20.528	20.228		0.16	0.15	1.28	1.00	0.38	73	73	68	2.72	3.90	106	0.048	97	97	206.0	0.81	6.55	15.4	114.9	176.7	130.4	51.4	166.4	308	70	72	68	0.052	1.001	54.588	6282
134	20.685	20.382		0.16	0.15	1.28	1.00	0.38	73	73	68	2.74	3.90	106	0.046	100	100	204.8	1.15	6.68	15.4	114.7	176.5	130.2	51.4	166.2	307	72	72	68	0.056	1.001	55.723	6400
135	20.840	20.534		0.16	0.15	1.29	1.00	0.38	73	73	68	2.75	3.90	108	0.046	99	99	203.0	1.87	6.60	15.3	114.9	176.6	130.4	51.5	166.3	310	72	72	68	0.057	1.001	55.071	6335
136	20.995	20.687		0.16	0.15	1.28	0.99	0.38	73	73	68	2.75	3.90	107	0.043	102	103	201.8	1.14	6.37	15.4	114.8	176.5	130.2	51.4	166.2	310	72	72	68	0.058	1.001	53.135	6105
137	21.150	20.839		0.15	0.15	1.29	0.99	0.38	73	73	68	2.77	3.90	107	0.045	100	100	200.4	1.40	6.68	15.3	115.1	176.8	130.5	51.4	166.5	309	72	72	68	0.057	1.001	55.726	6420
138	21.306	20.989		0.16	0.15	1.29	0.97	0.38	73	73	68	2.76	4.00	106	0.043	103	101	199.1	1.36	6.68	15.3	114.7	176.4	130.2	51.4	166.1	308	72	72	68	0.054	1.001	55.720	6399
139	21.461	21.139		0.15	0.15	1.28	0.97	0.38	73	73	68	2.76	4.10	107	0.043	102	101	198.2	0.87	6.55	15.3	115.1	176.9	130.6	51.4	166.6	309	72	72	68	0.056	1.001	54.593	6294
140	21.616	21.289		0.16	0.15	1.28	0.96	0.38	73	73	68	2.77	4.10	109	0.046	99	98	196.7	1.49	6.72	15.3	115.2	176.9	130.6	51.4	166.6	314	73	73	68	0.057	1.001	56.016	6460
141	21.771	21.440		0.16	0.15	1.28	0.96	0.38	73	73	68	2.78	4.10	107	0.045	100	100	195.8	0.88	6.61	15.5	115.2	176.9	130.4	51.4	166.6	312	72	73	68	0.055	1.001	55.099	6353
142	21.926	21.589		0.15	0.15	1.27	0.96	0.38	73	73	68	2.78	4.10	108	0.046	99	97	194.1	1.75	6.49	15.4	115.1	176.8	130.5	51.4	166.5	312	73	73	68	0.053	1.001	54.112	6236
143	22.078	21.740		0.15	0.15	1.26	0.97	0.38	73	73	68	2.79	4.00	106	0.047	96	97	193.0	1.02	6.58	15.4	115.0	176.7	130.5	51.4	166.5	309	73	73	68	0.056	1.001	54.918	6325
144	22.234	21.892		0.16	0.15	1.32	0.98	0.38	73	73	68	4.34	4.10	108	0.045	101	100	191.5	1.58	6.37	15.4	115.0	176.7	130.5	51.4	166.5	311	73	73	68	0.054	1.001	53.139	6121
145	22.389	22.043		0.15	0.15	1.29	0.98	0.38	73	73	68	4.51	4.20	108	0.046	99	99	190.7	0.75	6.51	15.4	115.2	176.9	130.5	51.4	166.6	312	73	73	68	0.053	1.001	54.277	6259
146	22.543	22.194		0.15	0.15	1.27	0.98	0.38	73	73	68	4.53	4.20	108	0.045	100	100	189.6	1.12	6.61	15.4	115.5	177.2	130.8	51.4	166.9	312	72	73	68	0.055	1.001	55.088	6372
147	22.691	22.345		0.15	0.15	1.24	0.98	0.38	73	73	68	4.66	4.20	109	0.044	97	101	188.6	1.04	6.47	15.3	115.5	177.2	130.6	51.4	166.9	314	72	73	68	0.056	1.001	53.928	6234
148	22.848	22.497		0.16	0.15	1.32	0.97	0.38	73	73	68	2.20	4.20	110	0.046	101	99	186.4	2.13	6.46	15.4	115.4	177.0	130.7	51.4	166.8	317	70	73	68	0.057	1.001	53.906	6226
149	23.005	22.648		0.16	0.15	1.31	0.98	0.38	73	73	68	2.21	4.20	107	0.045	101	100	185.3	1.15	6.46	15.4	115.7	177.3	131.0	51.4	167.1	312	59	73	68	0.054	1.001	53.857	6238
150	23.161	22.800		0.16	0.15	1.29	0.98	0.38	73	73	68	2.95	4.10	106	0.046	100	99	184.6	0.69	6.54	15.4	115.5	177.3	130.7	51.4	166.9	309	60	73	68	0.053	1.001	54.543	6308
151	23.318	22.952		0.16	0.15	1.31	0.97	0.38	73	73	68	2.93	4.20	106	0.046	100	99	183.9	0.73	6.60	15.4	115.5	177.2	130.6	51.4	166.9	309	60	73	68	0.054	1.001	55.074	6367
152	23.476	23.102		0.16	0.15	1.32	0.98	0.38	73	73	68	2.95	4.10	109	0.045	102	99	183.0	0.89	6.66	15.4	115.8	177.6	131.0	51.4	167.2	314	60	73	68	0.053	1.001	55.562	6443
153	23.632	23.253		0.16	0.15	1.31	0.98	0.38	73	73	68	2.93	4.20	107	0.046	100	98	180.9	2.08	6.49	15.3	115.8	177.5	130.8	51.4	167.1	312	60	73	68	0.055	1.001	54.097	6269
154	23.788	23.411		0.16	0.16	1.31	0.82	0.38	73	73	68	2.95	5.10	106	0.046	100	103	179.9	0.95	6.70	15.3	115.8	177.4	131.0	51.4	167.2	309	60	72	68	0.055	1.001	55.888	6478
155	23.944	23.555		0.16	0.14	1.30	1.09	0.38	73	73	68	2.95	1.30	107	0.047	99	93	178.7	1.27	6.48	15.3	115.9	177.7	131.0	51.4	167.3	310	60	71	68	0.055	1.001	54.008	6268
156	24.102	23.713		0.16	0.16	1.30	0.09	0.38	73	73	68	2.97	8.80	108	0.042	106	108	177.3	1.36	6.40	15.4	115.6	177.3	130.8	51.4	167.0	312	73	71	68	0.055	1.001	53.364	6176
157	24.258	23.867		0.16	0.15	1.30	1.01	0.38	73	73	68	2.97	1.30	108	0.049	97	97	176.3	1.05	6.49	15.4	115.8	177.5	131.1	51.4	167.2	313	60	72	68	0.056	1.001	54.106	6275
158	24.413	24.018		0.16	0.15	1.29	0.96	0.38	73	73	68	2.98	1.60	107	0.047	98	97	175.5	0.74	6.66	15.4	115.7	177.5	131.0	51.4	167.2	312	60	72	68	0.052	1.001	55.564	6439
159	24.569	24.171		0.16	0.15	1.29	0.99	0.38	73	73	68	2.98	1.70	105	0.046	99	100	175.0	0.55	6.43	15.4	115.8	177.6	130.9	51.4	167.2	308	60	72	68	0.053	1.001	53.620	6219
160	24.722	24.323		0.15	0.15	1.30	0.99	0.38	73	73	68	2.97	1.70	106	0.049	95	96	173.4	1.56	6.27	15.3	115.9	177.6	131.1	51.4	167.3	310	60	72	68	0.052	1.001	52.328	6073
161	24.874	24.475		0.15	0.15	1.30	0.99	0.38	73	73	68	4.47	1.70	106	0.049	94	96	172.6	0.84	6.31	15.3	116.3	178.0	131.2	51.4	167.7	309	60	72	68	0.054	1.001	52.651	6130
162	25.033	24.628		0.16	0.15	1.23	0.99	0.38	73	73	68	2.13	1.70	106	0.040	109	107	171.2	1.44	6.39	15.4	116.2	178.0	131.1	51.4	167.6	309	60	72	68	0.053	1.001	53.295	6201
163	25.190	24.779		0.16	0.15	1.31	0.99	0.38	73	73	68	2.20	1.70	108	0.047	99	97	169.5	1.68	6.47	15.4	116.0	177.8	131.0	51.4	167.4	312	71	71	68	0.057	1.001	53.951	6265
164	25.348	24.931		0.16	0.15	1.27	0.98	0.38	73	73	68	2.14	1.70	108	0.047	100	98	167.9	1.54	6.32	15.4	116.2	177.8	131.3	51.4	167.6	313	71	71	68	0.055	1.001	52.677	6126
165	25.505	25.082		0.16	0.15	1.30	0.98	0.38	73	73	68	2.17	1.80	107	0.045	101	100	167.2	0.70	6.59	15.4	116.1	177.8	131.1	51.4	167.5	311	70	71	68	0.056	1.001	54.919	6383
166	25.663	25.233		0.16	0.15	1.33	0.98	0.38	73	73	68	2.78	1.80	108	0.043	104	102	166.2	1.00	6.55	15.3	116.1	177.8	131.2	51.4	167.5	313	59	71	68	0.055	1.001	54.589	6346
167	25.821	25.383		0.16	0.15	1.32	0.97	0.38	73	73	68	2.79	1.80	105	0.044	103	100	166.0	0.28	6.55	15.4	116.1	177.8	131.2	51.4	167.5	308	59	71	68	0.053	1.001	54.590	6347
168	25.979	25.534		0.16	0.15	1.32	0.96	0.38	73	73	68	2.78	1.80	106	0.046	101	98	163.3	2.68	6.57	15.4	116.4	178.1	131.3	51.4	167.8	309	59	71	68	0.053	1.001	54.763	6381
169	26.136	25.684		0.16	0.15	1.32	0.96	0.38	73	73	68	2.81	1.80	105	0.043	104	101	162.9	0.43	6.43	15.3	116.3	178.0	131.3	51.4	167.7	307	59	71	68	0.055	1.001	53.626	6243

Elapsed Time	Particulate Sampling Data																Fuel Weight, lb		Flow, gpm		Temperature Data, oF													
	Gas Meter Cubic Feet (1)	Gas Meter Cubic Feet (2)	Gas Meter Cubic Feet (amb)	Sample Rate, cfm (1)	Sample Rate, cfm (2)	Orifice dH (1)	Orifice dH (2)	Orifice dH (amb)	Meter oF (1)	Meter oF (2)	Meter oF (amb)	Meter Vac. In. Hg. (1)	Meter Vac. In. Hg. (2)	Dilution Tunnel Temp.	Dilution Tunnel dP	Pro. Rate (%) (1)	Pro. Rate (%) (2)	Scale Reading	Weight Change	Load Side Liquid Flow Rate	Boiler Side Liquid Flow Rate (optional)	Thermopile ΔT	Boiler to Heat Exch. Temp.	Heat Exch to Boiler Temp.	Inlet Load Temp.	Outlet Load Temp.	Stack	Filter (1)	Filter (2)	Ambient	Stack Draft	Specific Heat of Inlet Water (BTU/lb-°F)	Mass Flow Rate of Inlet Water (lb/min)	Heat Output, Btu
170	26.295	25.834		0.16	0.15	1.32	0.97	0.38	73	73	68	2.81	1.80	105	0.044	104	100	162.4	0.49	6.41	15.4	116.2	178.0	131.3	51.4	167.6	306	59	71	68	0.054	1.001	53.463	6222

Elapsed Time	Particulate Sampling Data																	Fuel Weight, lb		Flow, gpm		Temperature Data, oF										Stack Draft			
	Gas Meter Cubic Feet (1)	Gas Meter Cubic Feet (2)	Gas Meter Cubic Feet (amb)	Sample Rate, cfm (1)	Sample Rate, cfm (2)	Orifice dH (1)	Orifice dH (2)	Orifice dH (amb)	Meter oF (1)	Meter oF (2)	Meter oF (amb)	Meter Vac. In. Hg. (1)	Meter Vac. In. Hg. (2)	Dilution Tunnel Temp.	Dilution Tunnel dP	Pro. Rate (%) (1)	Pro. Rate (%) (2)	Scale Reading	Weight Change	Load Side Liquid Flow Rate	Boiler Side Liquid Flow Rate (optional)	Thermopile ΔT	Boiler to Heat Exch. Temp.	Heat Exch to Boiler Temp.	Inlet Load Temp.	Outlet Load Temp.	Stack	Filter (1)	Filter (2)	Ambient		Specific Heat of Inlet Water (BTU/lb-°F)	Mass Flow Rate of Inlet Water (lb/min)	Heat Output, Btu
171	26.452	25.984		0.16	0.15	1.32	0.97	0.38	73	73	68	2.80	1.80	105	0.044	102	100	161.0	1.32	6.55	15.4	116.3	178.0	131.3	51.4	167.7	307	59	71	68	0.052	1.001	54.595	6356
172	26.610	26.133		0.16	0.15	1.32	0.96	0.38	73	73	68	2.82	1.80	105	0.044	103	99	160.3	0.72	6.65	15.4	115.6	177.2	130.8	51.4	166.9	306	59	71	68	0.055	1.001	55.434	6413
173	26.767	26.285		0.16	0.15	1.32	0.92	0.38	73	73	68	2.82	1.90	105	0.045	101	100	158.8	1.57	6.71	15.4	116.1	177.8	131.1	51.4	167.5	306	59	71	68	0.052	1.001	55.959	6504
174	26.924	26.436		0.16	0.15	1.32	0.98	0.38	73	73	68	2.83	2.00	105	0.045	101	99	157.5	1.26	6.53	15.4	116.1	177.8	131.1	51.4	167.5	306	59	71	68	0.052	1.001	54.431	6327
175	27.081	26.588		0.16	0.15	1.32	0.99	0.38	73	73	68	2.84	2.00	105	0.046	100	99	156.1	1.44	6.51	15.4	116.1	177.7	131.2	51.4	167.4	306	59	71	68	0.052	1.001	54.273	6308
176	27.239	26.741		0.16	0.15	1.32	0.98	0.38	73	73	67	2.83	2.00	105	0.044	103	102	155.3	0.76	6.29	15.4	116.0	177.7	131.2	51.4	167.4	306	59	71	67	0.051	1.001	52.497	6096
177	27.395	26.892		0.16	0.15	1.31	0.98	0.38	72	73	67	2.84	2.00	105	0.045	101	99	154.1	1.17	6.37	15.4	116.0	177.8	131.0	51.4	167.4	306	59	71	67	0.054	1.001	53.148	6173
178	27.552	27.043		0.16	0.15	1.30	0.99	0.38	72	73	67	2.85	2.00	104	0.046	100	98	153.2	0.88	6.47	15.3	115.9	177.6	131.0	51.4	167.3	306	59	71	67	0.052	1.001	53.948	6260
179	27.708	27.195		0.16	0.15	1.31	0.98	0.38	72	73	68	2.84	2.00	104	0.048	97	97	151.8	1.40	6.45	15.3	116.0	177.7	130.9	51.4	167.3	306	59	71	68	0.053	1.001	53.808	6247
180	27.865	27.344		0.16	0.15	1.31	0.97	0.38	73	73	67	2.85	2.00	104	0.046	100	97	150.1	1.72	6.47	15.4	115.9	177.7	131.0	51.4	167.3	305	59	71	67	0.053	1.001	53.958	6261
181	28.022	27.495		0.16	0.15	1.30	0.97	0.38	72	73	67	2.85	2.00	106	0.046	100	98	150.0	0.14	6.67	15.3	116.0	177.8	131.1	51.4	167.4	308	59	71	67	0.056	1.001	55.613	6460
182	28.177	27.646		0.16	0.15	1.30	0.96	0.38	72	73	67	2.88	2.00	104	0.044	101	100	148.9	1.02	6.57	15.4	116.1	177.8	131.2	51.4	167.4	306	59	71	67	0.055	1.001	54.794	6368
183	28.333	27.797		0.16	0.15	1.29	0.96	0.38	72	73	67	2.88	2.00	104	0.039	108	107	147.4	1.60	6.57	15.4	115.9	177.6	131.0	51.4	167.3	306	59	71	67	0.055	1.001	54.753	6355
184	28.489	27.947		0.16	0.15	1.30	0.96	0.38	72	72	67	2.87	2.00	104	0.046	100	98	146.5	0.84	6.53	15.5	115.9	177.6	131.1	51.4	167.2	305	59	71	67	0.053	1.001	54.438	6316
185	28.646	28.103		0.16	0.16	1.29	0.99	0.38	72	73	67	2.89	2.10	103	0.042	105	106	146.0	0.56	6.20	15.4	116.1	177.8	131.2	51.4	167.4	305	59	71	67	0.051	1.001	51.687	6008
186	28.799	28.256		0.15	0.15	1.30	1.09	0.38	72	73	67	2.89	2.70	104	0.049	95	96	144.8	1.17	6.45	15.4	115.9	177.6	130.9	51.4	167.2	305	59	71	67	0.052	1.001	53.789	6240
187	28.882	28.409		0.08	0.15	1.03	0.98	0.38	72	72	67	3.90	2.60	104	0.046	53	100	143.5	1.24	6.62	15.4	115.9	177.6	131.0	51.4	167.2	305	59	71	67	0.055	1.001	55.247	6410
188	28.990	28.561		0.11	0.15	0.18	0.98	0.38	72	72	67	9.21	2.60	104	0.043	71	102	142.8	0.77	6.20	15.4	117.1	178.0	132.4	51.4	168.4	305	59	71	67	0.053	1.001	51.700	6061
189	29.148	28.711		0.16	0.15	1.33	0.98	0.38	72	72	67	2.26	2.60	103	0.045	102	99	141.5	1.30	6.43	15.3	116.0	177.6	131.1	51.4	167.3	305	69	71	67	0.054	1.001	53.640	6228
190	29.302	28.853		0.15	0.14	1.27	0.98	0.38	72	72	67	2.72	2.60	103	0.045	99	93	139.9	1.58	6.40	15.4	116.0	177.9	131.1	51.4	167.3	305	59	70	67	0.054	1.001	53.373	6198
191	29.458	29.029		0.16	0.18	1.27	1.30	0.38	72	72	67	2.76	1.70	103	0.045	101	116	138.8	1.07	6.49	15.4	115.9	177.6	131.0	51.4	167.2	304	59	70	67	0.052	1.001	54.114	6278
192	29.613	29.185		0.16	0.16	1.27	1.34	0.38	72	72	67	2.77	1.60	103	0.045	100	103	138.0	0.86	6.43	15.3	115.7	177.5	130.9	51.4	167.1	304	59	70	67	0.053	1.001	53.624	6214
193	29.770	29.338		0.16	0.15	1.27	1.01	0.38	72	72	67	2.78	2.50	103	0.043	104	103	137.1	0.90	6.57	15.3	116.0	177.7	131.1	51.3	167.3	304	59	71	67	0.052	1.001	54.760	6360
194	29.926	29.490		0.16	0.15	1.30	1.00	0.38	72	72	67	2.80	2.50	103	0.042	104	104	135.1	1.91	6.58	15.3	115.8	177.5	130.9	51.3	167.1	304	59	71	67	0.051	1.001	54.914	6366
195	30.083	29.643		0.16	0.15	1.30	0.98	0.38	72	72	67	2.81	2.60	103	0.046	100	100	134.6	0.55	6.64	15.4	115.8	177.6	130.9	51.3	167.2	304	59	70	67	0.055	1.001	55.393	6424
196	30.240	29.795		0.16	0.15	1.30	1.00	0.38	72	72	67	2.83	2.60	103	0.044	102	101	133.6	0.95	6.68	15.4	115.7	177.4	130.9	51.3	167.1	304	59	70	67	0.052	1.001	55.726	6456
197	30.396	29.947		0.16	0.15	1.29	0.99	0.38	72	72	67	2.82	2.60	103	0.042	104	104	133.0	0.64	6.48	15.3	115.8	177.5	130.9	51.3	167.1	305	59	70	67	0.053	1.001	54.011	6261
198	30.552	30.099		0.16	0.15	1.30	0.98	0.38	72	72	67	2.81	2.60	103	0.046	99	99	132.0	1.05	6.48	15.3	115.9	177.6	130.9	51.3	167.2	305	59	70	67	0.055	1.001	54.025	6266
199	30.708	30.250		0.16	0.15	1.30	0.99	0.38	72	72	67	2.81	2.60	103	0.046	99	98	130.6	1.39	6.68	15.4	115.9	177.6	130.9	51.3	167.2	305	59	70	67	0.051	1.001	55.727	6465
200	30.865	30.402		0.16	0.15	1.30	0.98	0.38	72	72	67	2.83	2.60	103	0.046	100	99	129.7	0.85	6.47	15.3	115.6	177.3	130.8	51.3	166.9	305	59	70	67	0.052	1.001	53.952	6244
201	31.021	30.553		0.16	0.15	1.29	0.98	0.38	72	72	67	2.84	2.60	103	0.046	99	98	128.2	1.52	6.33	15.4	115.7	177.4	130.9	51.3	167.0	306	59	70	67	0.050	1.001	52.815	6117
202	31.177	30.704		0.16	0.15	1.29	0.97	0.38	72	72	67	2.83	2.60	103	0.045	101	99	127.6	0.63	6.47	15.4	115.7	177.4	130.9	51.3	167.0	306	59	70	67	0.052	1.001	53.959	6251
203	31.333	30.855		0.16	0.15	1.29	0.98	0.38	72	72	67	2.83	2.60	104	0.047	98	97	126.3	1.24	6.63	15.3	115.6	177.4	130.7	51.3	167.0	306	59	70	67	0.052	1.001	55.259	6398
204	31.488	31.007		0.16	0.15	1.29	0.97	0.38	72	72	67	2.83	2.60	103	0.048	97	97	125.0	1.29	6.24	15.4	115.7	177.4	131.0	51.3	167.1	306	59	70	67	0.051	1.001	52.014	6028
205	31.643	31.157		0.16	0.15	1.26	0.97	0.38	72	72	67	2.93	2.60	103	0.042	103	102	123.8	1.25	6.61	15.5	115.8	177.4	131.0	51.3	167.1	306	59	70	67	0.052	1.001	55.133	6391
206	31.799	31.309		0.16	0.15	1.30	0.98	0.38	72	72	67	2.99	2.60	103	0.046	99	99	122.2	1.59	6.51	15.4	115.9	177.5	131.0	51.3	167.2	307	59	70	67	0.053	1.001	54.287	6297
207	31.956	31.460		0.16	0.15	1.30	0.98	0.38	72	72	67	3.02	2.60	103	0.045	101	99	122.3	-0.10	6.43	15.3	115.8	177.5	130.8	51.3	167.1	307	59	70	67	0.054	1.001	53.622	6214
208	32.112	31.611		0.16	0.15	1.30	0.98	0.38	72	72	67	3.00	2.60	103	0.044	102	101	120.1	2.20	6.57	15.4	115.9	177.6	131.0	51.3	167.2	307	59	70	67	0.054	1.001	54.756	6354
209	32.269	31.762		0.16	0.15	1.30	0.98	0.38	72	72	67	3.01	2.60	104	0.045	101	99	120.3	-0.23	6.59	15.4	116.1	177.9	131.0	51.3	167.4	307	59	70	67	0.053	1.001	54.924	6384
210	32.423	31.913		0.15	0.15	1.26	0.98	0.38	72	72	67	3.14	2.60	103	0.047	97	97	117.8	2.49	6.64	15.4	115.8	177.6	130.9	51.3	167.2	307	59	70	67	0.053	1.001	55.409	6426
211	32.580	32.065		0.16	0.15	1.30	0.99	0.38	72	72	67	3.24	2.70	103	0.047	99	98	117.2	0.62	6.46	15.4	116.1	177.9	131.2	51.3	167.5	307	59	70	67	0.052	1.001	53.917	6270
212	32.736	32.217		0.16	0.15	1.30	0.98	0.38	72	72	67	3.25	2.70	103	0.045	101	100	116.5	0.69	6.40	15.4	116.2	177.9	131.3	51.3	167.5	307	59	70	67	0.051	1.001	53.345	6204
213	32.894	32.368		0.16	0.15	1.30	0.99	0.38	72	72	67	3.26	2.70	103	0.045	102	99	115.6	0.90	6.68	15.4	115.9	177.6	131.0	51.3	167.2	306	59	70	67	0.052	1.001	55.700	6463
214	33.050	32.520		0.16	0.15	1.30	0.96	0.38	72	72	67	3.26	2.80	103	0.045	101	100	114.0	1.61	6.52	15.4	115.9	177.7	130.9	51.3	167.3	307	59	70	67	0.053	1.001	54.383	6313
215	33.206	32.671		0.16	0.15	1.29	0.98	0.38	72	72	67	3.25	2.90	103	0.047	98	97	113.1	0.88	6.43	15.3	116.2	177.9	131.1	51.3	167.5	307	59	70	67	0.052	1.001	53.636	6240
216	33.362	32.822		0.16	0.15	1.29	0.98	0.38	72	72	67	3.26	2.90	103	0.047	98	97	112.3	0.84	6.28	15.4	115.9	177.5	131.1	51.3	167.2	307	59	70	67	0.051	1.001	52.337	6072
217	33.519	32.974		0.16	0.15	1.30	0.97	0.38	72	72	67	3.26	2.90	103	0.046	100	99	110.9	1.41	6.49	15.4	115.7	177.5	130.9	51.3	167.1	306	58	70	67	0.053	1.001	54.113	6271
218	33.675	33.124		0.16	0.15	1.30	0.98	0.38	72	72	67	3.26	2.90	103	0.044	102	100	110.3	0.62	6.59	15.4	116.1	177.9	131.1	51.3	167.5	307	59	70	67	0.051	1.001	54.924	6386
219	33.831	33.274		0.16	0.15	1.29	0.97	0.38	72	72	67	3.26	2.90	103	0.047	98	97	108.7	1.56	6.62	15.4	116.3	178.0	131.4	51.3	167.6	307	59	70	67	0.052	1.001	55.237	6432
220	33.987	33.426		0.16	0.15	1.29	0.97	0.38	72	72	67	3.26	2.90	103	0.046	99	99	107.5	1.22	6.49	15.4	116.4	178.1	131.4	51.3	167.7	307	59	70	67	0.053	1.001	54.129	6307
221	34.143	33.576		0.16	0.15	1.30	0.97	0.38	72	72	67	3.27	2.90	103	0.046	99	98	106.2	1.28	6.50	15.5	116.4	178.1	131.3	51.3	167.7	307	58	70	67	0.052	1.001	54.170	6312
222	34.300	33.727		0.16	0.15	1.30	0.98	0.38	72	72	67	3.27	2.90	103	0.045	101	99	105.4	0.82	6.66	15.4	116.5	178.2	131.4	51.3	167.9	308	59	70	67	0.053	1.001	55.576	6485
223	34.457	33.879		0.16	0.15	1.29	0.97	0.38	72	72	67	3.28	2.90	102	0.045	101	100	104.1	1.33	6.57	15.4	116.3	178.1	131.2	51.3	167.7	306	59	70	67	0.052	1.001	54.770	6380
224	34.611	34.033		0.15	0.15	1.32	1.01	0.38	72	72	67	3.32	3.00	104	0.047	97	99	103.5	0.57	6.57	15.4	116.6	178.3	131.5	51.3	167.9	307	59	70	67	0.052	1.001	54.762	6391
225	34.769	34.187		0.16	0.15	1.25	1.01	0.38	72	72	67	3.60	3.00	103	0.046	101	100	103.1	0.44	6.37	15.3	116.5	178.2	131.4	51.3	167.8	307	58	70	67	0.053	1.001	53.137	6197
226	34.927	34.343		0.16	0.16	1.32	1.02	0.38	72	72	67	3.74	3.00	103	0.042	105	106	101.4	1.67	6.53	15.4	116.8	178.6	131.5	51.3	168.1	307	58	70	67	0.048	1.001	54.439	6364
227	35.080	34.497		0.15	0.15	1.31	1.02	0.38	72	72	67	3.75	3.00	103	0.045	99	101	100.5	0.90	6.43	15.4	116.7	178.4	131.6	51.3	168.1	307	59	71	67	0.054	1.001	53.623	6267
228	35.189	34.652		0.11	0.16	0.63	1.02	0.38	72	72	67	7.97	3.00	103	0.045	70	102	99.3	1.19	6.32	15.3	116.5	178.3	131.3	51.3	167.8	308	58	70	67	0.050	1.001	52.743	6152
229	35.345	34.806		0.16	0.15	1.30	1.02	0.38	72	72	67	2.18	3.00	103	0.046	99	100	98.0	1.30	6.56	15.4	116.5	178.3	131.4	51.3	167.9	307	69	71	67	0.051	1.001	54.699	6381
230	35.501	34.968		0.16	0.16	1.08	1.40	0.38	72	72	67	2.78	1.70	103	0.045	101	107	97.2	0.84	6.62	15.3	116.8	178.5	131.6	51.3	168.1	307	59	70	67	0.054	1.001	55.236	6457
231	35.657	35.127		0.16	0.16	1.31	1.05	0.38	72	72	67	3.31	1.30	103	0.045	101	105	95.6	1.56	6.59	15.4	116.6	178.4	131.5	51.3	168.0	307	59	69	67	0.053	1.001	54.923	6414

Elapsed Time	Particulate Sampling Data																	Fuel Weight, lb		Flow, gpm		Temperature Data, oF												
	Gas Meter Cubic Feet (1)	Gas Meter Cubic Feet (2)	Gas Meter Cubic Feet (amb)	Sample Rate, cfm (1)	Sample Rate, cfm (2)	Orifice dH (1)	Orifice dH (2)	Orifice dH (amb)	Meter oF (1)	Meter oF (2)	Meter oF (amb)	Meter Vac. In. Hg. (1)	Meter Vac. In. Hg. (2)	Dilution Tunnel Temp.	Dilution Tunnel dP	Pro. Rate (%) (1)	Pro. Rate (%) (2)	Scale Reading	Weight Change	Load Side Liquid Flow Rate	Boiler Side Liquid Flow Rate (optional)	Thermopile ΔT	Boiler to Heat Exch. Temp.	Heat Exch to Boiler Temp.	Inlet Load Temp.	Outlet Load Temp.	Stack	Filter (1)	Filter (2)	Ambient	Stack Draft	Specific Heat of Inlet Water (BTU/lb-°F)	Mass Flow Rate of Inlet Water (lb/min)	Heat Output, Btu
232	35.814	35.259		0.16	0.13	1.29	1.08	0.38	72	72	67	3.34	1.30	103	0.047	99	85	94.8	0.83	6.45	15.4	116.6	178.4	131.5	51.3	168.0	307	59	70	67	0.052	1.001	53.797	6283
233	35.970	35.419		0.16	0.16	1.29	1.08	0.38	72	72	67	3.33	1.30	103	0.046	99	104	94.4	0.33	6.39	15.3	116.5	178.2	131.3	51.3	167.8	307	59	70	67	0.051	1.001	53.308	6216
234	36.127	35.573		0.16	0.15	1.30	0.90	0.38	72	72	67	3.33	1.70	103	0.046	100	100	92.8	1.61	6.28	15.3	116.5	178.3	131.4	51.3	167.9	307	59	69	67	0.054	1.001	52.336	6107
235	36.284	35.729		0.16	0.16	1.30	1.04	0.38	72	72	67	3.34	1.90	103	0.047	99	100	92.9	-0.05	6.43	15.4	116.4	178.2	131.4	51.3	167.8	306	59	70	67	0.053	1.001	53.628	6251
236	36.440	35.884		0.16	0.16	1.30	1.03	0.38	72	72	67	3.34	1.90	103	0.044	102	103	92.1	0.81	6.53	15.4	116.7	178.5	131.6	51.3	168.1	306	59	70	67	0.052	1.001	54.441	6363
237	36.596	36.041		0.16	0.16	1.29	1.04	0.38	72	72	67	3.34	1.90	102	0.045	100	103	90.9	1.15	6.75	15.4	116.7	178.4	131.5	51.3	168.0	306	59	70	67	0.052	1.001	56.266	6573
238	36.752	36.196		0.16	0.16	1.29	1.04	0.38	72	72	67	3.36	1.90	103	0.047	98	100	89.9	1.01	6.32	15.4	116.9	178.6	131.7	51.3	168.2	306	58	70	67	0.052	1.001	52.670	6165
239	36.909	36.353		0.16	0.16	1.29	1.04	0.38	72	72	67	3.37	1.90	102	0.046	100	102	88.8	1.15	6.57	15.3	116.7	178.6	131.5	51.3	168.1	306	59	69	67	0.051	1.001	54.768	6401
240	37.064	36.508		0.16	0.16	1.29	1.03	0.38	72	72	67	3.37	2.00	102	0.047	98	100	86.9	1.82	6.55	15.5	116.8	178.7	131.6	51.3	168.2	306	58	69	67	0.054	1.001	54.603	6387
241	37.220	36.663		0.16	0.15	1.28	1.04	0.38	72	72	67	3.37	2.00	102	0.047	98	100	86.0	0.92	6.51	15.4	116.8	178.6	131.6	51.3	168.1	305	58	69	67	0.050	1.001	54.282	6345
242	37.376	36.818		0.16	0.16	1.29	1.03	0.38	72	72	67	3.36	2.00	102	0.043	103	104	86.2	-0.21	6.30	15.5	116.8	178.7	131.5	51.3	168.2	305	58	69	67	0.053	1.001	52.503	6142
243	37.533	36.974		0.16	0.16	1.29	1.03	0.38	72	72	67	3.36	2.00	102	0.047	99	100	83.8	2.45	6.53	15.3	116.6	178.5	131.4	51.3	168.0	306	58	69	67	0.053	1.001	54.445	6357
244	37.688	37.128		0.16	0.15	1.28	1.02	0.38	72	72	67	3.37	2.00	102	0.048	97	98	84.1	-0.29	6.33	15.4	117.0	178.8	131.7	51.3	168.3	306	58	69	67	0.050	1.001	52.831	6187
245	37.843	37.283		0.16	0.16	1.28	1.02	0.38	72	72	67	3.38	2.00	102	0.046	99	101	83.0	1.03	6.54	15.3	116.7	178.6	131.5	51.3	168.1	307	58	68	67	0.054	1.001	54.535	6374
246	37.997	37.437		0.15	0.15	1.26	1.02	0.38	72	72	67	3.49	2.00	102	0.048	96	98	81.4	1.64	6.26	15.4	117.0	178.8	131.8	51.3	168.3	307	58	68	67	0.050	1.001	52.174	6113
247	38.151	37.591		0.15	0.15	1.25	1.02	0.38	72	72	67	3.49	2.00	102	0.042	103	105	81.0	0.42	6.59	15.4	117.2	179.0	131.9	51.3	168.5	306	58	68	67	0.051	1.001	54.933	6447
248	38.304	37.746		0.15	0.16	1.25	1.01	0.38	72	72	67	3.50	2.00	102	0.043	101	104	79.5	1.47	6.53	15.4	117.3	179.1	131.9	51.3	168.6	306	58	68	67	0.054	1.001	54.442	6392
249	38.458	37.899		0.15	0.15	1.25	1.01	0.38	72	72	67	3.51	2.00	102	0.045	99	101	79.4	0.13	6.47	15.4	117.2	178.9	131.8	51.3	168.5	306	58	68	67	0.051	1.001	53.957	6329
250	38.612	38.053		0.15	0.15	1.26	1.01	0.38	72	72	67	3.50	2.00	102	0.044	100	102	77.8	1.54	6.28	15.3	117.1	178.9	131.7	51.3	168.4	305	58	68	67	0.053	1.001	52.342	6136
251	38.765	38.206		0.15	0.15	1.25	1.01	0.38	72	72	67	3.49	2.00	102	0.044	100	102	77.6	0.26	6.59	15.3	117.3	179.2	131.9	51.3	168.7	304	58	68	67	0.050	1.001	54.936	6453
252	38.919	38.359		0.15	0.15	1.25	1.01	0.38	72	72	67	3.50	2.00	101	0.047	97	98	76.3	1.27	6.25	15.4	116.9	178.6	131.7	51.3	168.2	304	58	68	67	0.052	1.001	52.084	6094
253	39.073	38.512		0.15	0.15	1.25	1.00	0.38	72	72	67	3.52	2.00	101	0.045	99	101	76.8	-0.45	6.16	15.4	117.6	178.9	132.4	51.3	168.9	304	58	68	67	0.052	1.001	51.382	6050
254	39.226	38.665		0.15	0.15	1.24	0.99	0.38	72	72	67	3.52	2.10	101	0.044	100	102	76.0	0.78	6.54	15.4	117.5	179.1	132.2	51.3	168.8	303	58	68	67	0.052	1.001	54.574	6420
255	39.382	38.818		0.16	0.15	1.29	1.00	0.38	72	72	67	3.57	2.10	101	0.045	100	101	74.1	1.92	6.35	15.3	116.9	178.7	131.5	51.3	168.2	304	58	68	67	0.051	1.001	52.985	6200
256	39.538	38.970		0.16	0.15	1.28	0.99	0.38	72	72	67	3.57	2.10	101	0.046	99	99	73.0	1.08	6.49	15.3	117.2	179.1	131.8	51.3	168.6	303	58	68	67	0.050	1.001	54.123	6354
257	39.693	39.120		0.16	0.15	1.28	0.97	0.38	72	72	67	3.57	2.10	101	0.046	99	97	72.4	0.57	6.53	15.3	117.2	179.1	131.8	51.3	168.6	303	58	68	67	0.052	1.001	54.450	6392
258	39.851	39.273		0.16	0.15	1.28	0.98	0.38	72	72	67	3.58	2.10	101	0.047	99	98	71.1	1.36	6.26	15.4	117.5	179.4	132.0	51.3	168.8	303	58	67	67	0.051	1.001	52.176	6138
259	40.010	39.425		0.16	0.15	1.35	0.98	0.38	72	72	67	3.70	2.10	101	0.046	101	99	70.0	1.06	6.55	15.4	117.1	178.9	131.6	51.3	168.4	303	58	67	67	0.052	1.001	54.613	6401
260	40.168	39.578		0.16	0.15	1.33	0.99	0.38	72	72	67	3.64	2.10	101	0.046	101	99	69.4	0.65	6.67	15.3	117.0	178.8	131.8	51.3	168.3	303	58	67	67	0.052	1.001	55.639	6519
261	40.327	39.731		0.16	0.15	1.33	1.00	0.38	72	72	67	3.65	2.00	101	0.046	101	99	68.8	0.58	6.43	15.4	117.3	179.1	131.9	51.3	168.6	302	58	67	67	0.052	1.001	53.597	6292
262	40.485	39.884		0.16	0.15	1.33	1.00	0.38	72	72	67	3.64	2.00	100	0.044	103	102	68.5	0.25	6.28	15.3	117.0	178.9	131.7	51.3	168.3	302	58	67	67	0.051	1.001	52.343	6132
263	40.644	40.037		0.16	0.15	1.33	1.01	0.38	72	72	67	3.65	2.00	100	0.043	105	103	67.7	0.82	6.59	15.3	117.0	178.8	131.8	51.3	168.4	301	58	67	67	0.050	1.001	54.932	6437
264	40.801	40.190		0.16	0.15	1.32	0.99	0.38	72	72	67	3.63	2.10	100	0.044	102	102	66.6	1.12	6.59	15.3	116.5	178.3	131.4	51.3	167.8	301	58	67	67	0.050	1.001	54.930	6408
265	40.960	40.342		0.16	0.15	1.33	0.99	0.38	72	72	67	3.63	2.10	100	0.046	101	99	66.5	0.04	6.47	15.4	117.2	179.0	131.8	51.3	168.5	302	58	67	67	0.052	1.001	53.962	6331
266	41.118	40.495		0.16	0.15	1.33	1.00	0.38	72	72	67	3.63	2.00	101	0.047	99	98	64.3	2.20	6.61	15.4	116.8	178.7	131.5	51.3	168.2	302	58	67	67	0.050	1.001	55.094	6445
267	41.276	40.648		0.16	0.15	1.33	1.00	0.38	72	72	67	3.64	2.00	101	0.046	101	99	64.1	0.22	6.49	15.4	116.5	178.3	131.4	51.3	167.8	302	58	67	67	0.050	1.001	54.128	6314
268	41.435	40.800		0.16	0.15	1.33	0.99	0.38	72	72	67	3.65	2.10	100	0.048	99	97	64.2	-0.09	6.61	15.3	116.4	178.2	131.2	51.3	167.7	302	58	67	67	0.052	1.001	55.159	6427
269	41.594	40.953		0.16	0.15	1.33	1.00	0.38	72	72	67	3.63	2.00	101	0.046	101	99	62.5	1.69	6.59	15.3	116.6	178.5	131.5	51.3	168.0	302	58	67	67	0.050	1.001	54.960	6417
270	41.752	41.106		0.16	0.15	1.33	1.00	0.38	72	72	67	3.63	2.00	100	0.046	100	99	61.6	0.90	6.49	15.4	116.7	178.4	131.6	51.3	168.0	301	58	67	67	0.051	1.001	54.122	6322
271	41.910	41.257		0.16	0.15	1.33	0.99	0.38	72	72	67	3.64	2.10	100	0.046	100	98	61.6	0.04	6.41	15.3	116.6	178.5	131.4	51.3	167.9	301	58	67	67	0.050	1.001	53.472	6242
272	42.069	41.410		0.16	0.15	1.33	0.99	0.38	72	72	67	3.64	2.10	101	0.043	105	103	59.7	1.91	6.43	15.4	116.6	178.3	131.6	51.3	167.9	302	58	67	67	0.050	1.001	53.635	6261
273	42.227	41.561		0.16	0.15	1.33	0.98	0.38	72	72	67	3.63	2.10	100	0.045	102	99	60.2	-0.53	6.61	15.4	116.0	177.8	131.0	51.3	167.3	301	58	67	67	0.051	1.001	55.092	6397
274	42.385	41.712		0.16	0.15	1.34	0.98	0.38	72	72	67	3.65	2.10	100	0.046	100	98	58.0	2.16	6.49	15.3	116.6	178.4	131.5	51.3	167.9	301	58	67	67	0.050	1.001	54.124	6316
275	42.544	41.865		0.16	0.15	1.32	0.99	0.38	72	72	67	3.63	2.10	100	0.044	103	102	58.4	-0.39	6.26	15.3	116.3	178.0	131.3	51.3	167.6	301	58	67	67	0.049	1.001	52.181	6074
276	42.703	42.017		0.16	0.15	1.33	0.98	0.38	72	72	67	3.63	2.10	102	0.043	105	102	56.2	2.28	6.40	15.4	116.8	178.7	131.4	51.3	168.1	303	58	67	67	0.051	1.001	53.349	6238
277	42.861	42.168		0.16	0.15	1.33	0.98	0.38	72	72	67	3.64	2.10	103	0.046	101	98	56.9	-0.79	6.61	15.3	116.6	178.4	131.5	51.3	167.9	306	58	67	67	0.052	1.001	55.165	6440
278	43.019	42.320		0.16	0.15	1.33	0.98	0.38	72	72	67	3.64	2.10	101	0.044	103	101	54.9	2.06	6.36	15.3	116.7	178.6	131.4	51.3	168.1	303	58	67	67	0.053	1.001	53.023	6197
279	43.177	42.472		0.16	0.15	1.32	0.98	0.38	71	72	67	3.64	2.10	103	0.045	102	100	55.7	-0.80	6.66	15.3	116.8	178.6	131.5	51.3	168.1	306	58	67	67	0.052	1.001	55.582	6498
280	43.335	42.623		0.16	0.15	1.33	0.99	0.38	72	72	67	3.64	2.10	101	0.047	99	97	53.7	2.01	6.57	15.3	116.7	178.4	131.7	51.3	168.0	303	58	67	67	0.051	1.001	54.774	6400
281	43.494	42.775		0.16	0.15	1.33	0.98	0.38	72	72	67	3.63	2.10	102	0.047	100	98	52.7	0.97	6.43	15.4	116.3	178.2	131.2	51.3	167.7	304	58	67	67	0.049	1.001	53.634	6247
282	43.652	42.927		0.16	0.15	1.33	0.98	0.38	71	72	67	3.64	2.10	102	0.046	101	99	51.3	1.45	6.33	15.3	116.6	178.5	131.5	51.3	168.0	306	58	67	67	0.051	1.001	52.828	6170
283	43.811	43.077		0.16	0.15	1.33	0.97	0.38	71	72	67	3.65	2.10	103	0.047	100	97	51.4	-0.16	6.16	15.4	116.9	178.7	131.7	51.3	168.2	307	58	67	67	0.053	1.001	51.370	6011
284	43.967	43.230		0.16	0.15	1.33	0.96	0.38	71	72	67	3.64	2.10	103	0.045	101	101	50.2	1.21	6.54	15.4	116.5	178.3	131.4	51.3	167.8	306	58	67	67	0.051	1.001	54.578	6366
285	44.122	43.384		0.16	0.15	1.27	1.01	0.38	72	72	67	3.55	2.10	102	0.044	101	102	49.6	0.59	6.35	15.3	116.6	178.4	131.5	51.3	167.9	306	58	67	67	0.053	1.001	52.994	6186
286	44.277	43.537		0.16	0.15	1.27	1.01	0.38	71	72	67	3.54	2.10	103	0.046	99	100	48.2	1.46	6.55	15.3	116.7	178.6	131.5	51.3	168.1	308	58	67	67	0.052	1.001	54.592	6381
287	44.433	43.692		0.16	0.16	1.28	1.01	0.38	71	72	67	3.55	2.10	103	0.047	99	100	48.1	0.04	6.67	15.4	116.9	178.8	131.6	51.3	168.2	308	58	67	67	0.053	1.001	55.590	6504
288	44.588	43.845		0.16	0.15	1.26	1.01	0.38	71	72	67	3.55	2.10	103	0.045	100	101	47.6	0.48	6.59	15.4	116.7	178.5	131.6	51.3	168.1	307	58	67	67	0.052	1.001	54.938	6420
289	44.743	44.001		0.16	0.16	1.27	1.03	0.38	71	72	67	3.55	2.10	103	0.045	100	103	46.8	0.87	6.35	15.4	116.9	178.6	131.7	51.3	168.2	308	58	67	67	0.052	1.001	52.995	6200
290	44.898	44.155		0.16	0.15	1.28	1.02	0.38	71	72	67	3.56	2.10	103	0.047	98	99	46.1	0.67	6.53	15.4	116.8	178.6	131.6	51.3	168.1	307	58	67	67	0.051	1.001	54.446	6367
291	45.054	44.309		0.16	0.15	1.28	1.03	0.38	71	72	67	3.54	2.10	103	0.047	99	99	45.5	0.59	6.78	15.3	117.1	179.0	131.8	51.3	168.5	307	58	67	67	0.052	1.001	56.546	6632
292	45.209	44.464		0.16	0.16	1.28	1.02	0.38	71	72	67	3.54	2.10	103	0.047	98	100	45.0	0.55	6.51	15.3	117.1	179.0	131.7	51.3	168.4	308	58	67	67	0.052	1.001	54.284	6365

Elapsed Time	Particulate Sampling Data																	Fuel Weight, lb		Flow, gpm		Temperature Data, oF									Stack Draft			
	Gas Meter Cubic Feet (1)	Gas Meter Cubic Feet (2)	Gas Meter Cubic Feet (amb)	Sample Rate, cfm (1)	Sample Rate, cfm (2)	Orifice dH (1)	Orifice dH (2)	Orifice dH (amb)	Meter oF (1)	Meter oF (2)	Meter oF (amb)	Meter Vac. In. Hg. (1)	Meter Vac. In. Hg. (2)	Dilution Tunnel Temp.	Dilution Tunnel dP	Pro. Rate (%) (1)	Pro. Rate (%) (2)	Scale Reading	Weight Change	Load Side Liquid Flow Rate	Boiler Side Liquid Flow Rate (optional)	Thermopile ΔT	Boiler to Heat Exch. Temp.	Heat Exch to Boiler Temp.	Inlet Load Temp.	Outlet Load Temp.	Stack	Filter (1)	Filter (2)	Ambient		Specific Heat of Inlet Water (BTU/lb-°F)	Mass Flow Rate of Inlet Water (lb/min)	Heat Output, Btu
293	45.364	44.613		0.15	0.15	1.28	1.03	0.38	71	72	67	3.56	2.10	102	0.043	102	100	44.2	0.79	6.44	15.4	117.3	179.3	131.9	51.3	168.7	307	58	67	67	0.050	1.001	53.709	6309
294	45.520	44.744		0.16	0.13	1.28	0.78	0.38	71	72	67	3.55	2.90	102	0.047	98	84	42.9	1.32	6.53	15.3	117.2	179.1	131.9	51.3	168.6	307	58	66	67	0.052	1.001	54.452	6390
295	45.676	44.896		0.16	0.15	1.28	0.82	0.38	71	71	67	3.56	3.50	103	0.045	101	100	42.3	0.55	6.64	15.3	117.4	179.2	132.1	51.3	168.7	307	58	66	67	0.053	1.001	55.416	6513
296	45.830	45.048		0.15	0.15	1.27	0.98	0.38	71	71	67	3.55	1.40	104	0.043	102	103	41.4	0.92	6.41	15.4	117.5	179.4	132.1	51.3	168.8	310	58	66	67	0.052	1.001	53.471	6291
297	45.985	45.200		0.16	0.15	1.28	0.81	0.38	71	72	67	3.55	2.30	103	0.045	100	100	41.3	1.05	6.51	15.4	117.5	179.4	132.2	51.3	168.8	309	58	67	67	0.052	1.001	54.287	6386
298	46.142	45.358		0.16	0.16	1.28	0.92	0.38	71	72	67	3.54	3.50	104	0.047	99	102	39.4	1.81	6.70	15.3	117.5	179.4	132.1	51.3	168.9	310	58	68	67	0.052	1.001	55.898	6577
299	46.297	45.510		0.15	0.15	1.27	1.04	0.38	71	72	67	3.55	1.30	104	0.046	99	99	38.6	0.81	6.66	15.3	117.6	179.5	132.2	51.3	169.0	311	58	68	67	0.052	1.001	55.570	6545
300	46.452	45.663		0.16	0.15	1.28	0.97	0.38	71	72	67	3.55	1.80	104	0.045	100	101	39.1	-0.47	6.57	15.4	117.8	179.7	132.3	51.3	169.1	312	58	68	67	0.052	1.001	54.758	6458
301	46.608	45.816		0.16	0.15	1.28	1.01	0.38	71	72	67	3.53	1.80	103	0.045	101	101	37.1	1.97	6.47	15.3	117.3	179.2	131.9	51.3	168.6	309	58	68	67	0.053	1.001	53.944	6334
302	46.764	45.969		0.16	0.15	1.29	1.00	0.38	71	71	67	3.53	1.80	104	0.046	100	100	37.0	0.11	6.57	15.4	117.7	179.6	132.2	51.3	169.1	311	58	68	67	0.051	1.001	54.768	6456
303	46.920	46.122		0.16	0.15	1.28	1.00	0.38	71	72	67	3.54	1.80	104	0.045	101	101	34.5	2.49	6.33	15.3	117.7	179.6	132.2	51.3	169.0	311	58	68	67	0.054	1.001	52.826	6226
304	47.075	46.274		0.16	0.15	1.28	1.00	0.38	71	71	67	3.53	1.80	104	0.046	99	99	35.3	-0.77	6.45	15.3	117.8	179.7	132.3	51.3	169.2	311	58	67	67	0.049	1.001	53.804	6346
305	47.231	46.428		0.16	0.15	1.29	0.99	0.38	71	71	67	3.53	1.80	103	0.049	97	97	35.1	0.23	6.35	15.3	117.9	179.9	132.3	51.3	169.3	310	58	67	67	0.051	1.001	52.983	6257
306	47.387	46.579		0.16	0.15	1.29	1.00	0.38	71	71	67	3.51	1.80	104	0.046	100	99	33.4	1.65	6.39	15.4	118.1	180.1	132.4	51.3	169.5	310	58	67	67	0.053	1.001	53.319	6306
307	47.543	46.732		0.16	0.15	1.29	0.99	0.38	71	71	67	3.52	1.80	104	0.045	101	101	33.1	0.29	6.39	15.4	118.0	180.0	132.5	51.3	169.4	310	58	66	67	0.052	1.001	53.317	6301
308	47.698	46.885		0.16	0.15	1.28	0.99	0.38	71	71	67	3.52	1.80	104	0.046	99	100	32.6	0.54	6.50	15.3	117.9	179.9	132.2	51.3	169.3	310	58	66	67	0.052	1.001	54.177	6397
309	47.854	47.036		0.16	0.15	1.29	0.99	0.38	71	71	67	3.51	1.80	103	0.047	99	97	32.1	0.52	6.48	15.4	118.2	180.0	132.5	51.3	169.5	310	58	66	67	0.051	1.001	54.056	6395
310	48.011	47.189		0.16	0.15	1.29	0.99	0.38	71	71	67	3.51	1.80	104	0.047	99	99	32.2	-0.11	6.49	15.3	118.0	179.9	132.3	51.3	169.3	310	58	66	67	0.049	1.001	54.121	6392
311	48.167	47.341		0.16	0.15	1.29	0.98	0.38	71	71	67	3.50	1.80	104	0.047	99	98	31.1	1.05	6.61	15.4	118.5	180.4	132.7	51.3	169.8	310	58	66	67	0.053	1.001	55.096	6536
312	48.322	47.492		0.16	0.15	1.28	0.99	0.38	71	71	67	3.52	1.80	104	0.047	98	98	30.1	1.05	6.67	15.3	118.3	180.2	132.6	51.3	169.6	310	58	66	67	0.049	1.001	55.586	6581
313	48.478	47.645		0.16	0.15	1.29	0.99	0.38	71	71	67	3.51	1.80	104	0.041	106	106	29.6	0.53	6.70	15.4	118.4	180.4	132.5	51.3	169.7	310	58	65	67	0.048	1.001	55.905	6627
314	48.635	47.797		0.16	0.15	1.29	0.99	0.38	71	71	67	3.50	1.80	103	0.047	99	98	28.9	0.67	6.61	15.4	118.5	180.4	132.7	51.3	169.8	310	58	65	67	0.051	1.001	55.097	6536
315	48.791	47.949		0.16	0.15	1.29	0.99	0.38	71	71	67	3.50	1.80	104	0.044	102	101	28.1	0.76	6.57	15.4	118.4	180.3	132.7	51.4	169.7	311	58	65	67	0.051	1.001	54.755	6490
316	48.947	48.101		0.16	0.15	1.29	0.99	0.38	71	71	67	3.47	1.80	103	0.042	104	104	27.4	0.68	6.44	15.4	118.2	180.2	132.5	51.4	169.6	310	58	65	67	0.049	1.001	53.688	6354
317	49.103	48.252		0.16	0.15	1.29	0.98	0.38	71	71	67	3.47	1.80	104	0.043	103	102	26.9	0.51	6.53	15.3	118.3	180.2	132.6	51.3	169.6	311	58	65	67	0.050	1.001	54.419	6445
318	49.260	48.403		0.16	0.15	1.31	0.99	0.38	71	71	67	3.46	1.80	103	0.046	100	98	26.8	0.11	6.41	15.4	118.5	180.4	132.7	51.4	169.8	310	58	65	67	0.049	1.001	53.471	6342
319	49.418	48.556		0.16	0.15	1.30	0.99	0.38	71	71	67	3.47	1.80	104	0.044	103	102	25.9	0.90	6.28	15.3	118.2	180.3	132.3	51.3	169.5	311	58	65	67	0.050	1.001	52.342	6194
320	49.575	48.707		0.16	0.15	1.31	0.98	0.38	71	71	67	3.45	1.80	103	0.042	105	103	24.9	1.05	6.59	15.4	118.6	180.6	132.8	51.4	169.9	311	58	64	67	0.049	1.001	54.933	6522
321	49.732	48.858		0.16	0.15	1.31	0.98	0.38	71	71	67	3.44	1.80	104	0.042	105	103	24.3	0.62	6.72	15.3	118.6	180.6	132.8	51.4	170.0	311	58	64	67	0.048	1.001	56.069	6660
322	49.889	49.010		0.16	0.15	1.31	0.98	0.38	71	71	67	3.43	1.80	104	0.048	98	97	23.5	0.72	6.63	15.4	118.7	180.7	132.9	51.4	170.1	311	58	64	67	0.052	1.001	55.259	6569
323	50.047	49.162		0.16	0.15	1.32	0.98	0.38	71	71	67	3.42	1.80	104	0.047	100	98	22.7	0.81	6.68	15.3	119.1	181.2	133.0	51.4	170.5	312	58	64	67	0.051	1.001	55.741	6647
324	50.206	49.313		0.16	0.15	1.32	0.98	0.38	71	71	67	3.39	1.80	104	0.043	105	102	22.5	0.19	6.61	15.4	118.9	180.9	133.0	51.3	170.2	312	58	64	67	0.051	1.001	55.092	6556
325	50.365	49.464		0.16	0.15	1.33	0.98	0.38	71	71	67	3.38	1.80	104	0.047	101	98	21.7	0.86	6.30	15.3	119.0	181.1	133.0	51.4	170.4	312	58	64	67	0.054	1.001	52.540	6262
326	50.523	49.616		0.16	0.15	1.32	0.98	0.38	71	71	67	3.38	1.80	103	0.047	100	98	22.1	-0.39	6.44	15.3	119.0	180.9	133.2	51.4	170.4	311	58	64	67	0.050	1.001	53.713	6399
327	50.681	49.766		0.16	0.15	1.33	0.98	0.38	71	71	67	3.37	1.80	103	0.046	101	98	21.7	0.39	6.57	15.5	119.1	181.0	133.2	51.4	170.4	311	58	64	67	0.049	1.001	54.771	6529
328	50.839	49.918		0.16	0.15	1.33	0.97	0.38	71	71	67	3.38	1.80	105	0.046	101	99	20.7	0.94	6.47	15.3	119.2	181.2	133.3	51.4	170.5	313	58	64	67	0.052	1.001	53.959	6438
329	50.996	50.069		0.16	0.15	1.34	0.98	0.38	71	71	67	3.35	1.80	104	0.048	98	96	19.4	1.35	6.51	15.3	119.2	181.2	133.2	51.4	170.5	311	58	64	67	0.049	1.001	54.281	6477
330	51.153	50.221		0.16	0.15	1.30	0.99	0.38	71	71	67	3.30	1.80	105	0.047	99	98	18.6	0.80	6.63	15.3	119.1	181.2	133.1	51.4	170.5	314	58	64	67	0.050	1.001	55.253	6591
331	51.311	50.373		0.16	0.15	1.31	0.99	0.38	71	71	67	3.28	1.80	104	0.047	100	98	18.6	-0.04	6.66	15.4	119.5	181.6	133.3	51.4	170.9	312	58	64	67	0.051	1.001	55.581	6650
332	51.468	50.526		0.16	0.15	1.30	0.99	0.38	71	71	67	3.29	1.80	105	0.043	104	103	18.6	-0.02	6.45	15.3	118.9	180.9	133.0	51.4	170.3	314	58	64	67	0.050	1.001	53.802	6407
333	51.624	50.677		0.16	0.15	1.30	0.98	0.38	71	71	67	3.27	1.80	104	0.046	100	99	17.0	1.59	6.45	15.4	119.4	181.4	133.5	51.4	170.8	312	58	64	67	0.050	1.001	53.811	6435
334	51.781	50.829		0.16	0.15	1.31	0.99	0.38	71	71	67	3.27	1.80	104	0.045	101	100	16.9	0.19	6.74	15.3	119.4	181.5	133.2	51.4	170.8	312	58	64	67	0.051	1.001	56.213	6722
335	51.939	50.981		0.16	0.15	1.32	0.98	0.38	71	71	67	3.25	1.80	104	0.046	101	99	16.2	0.68	6.51	15.3	119.5	181.5	133.3	51.4	170.8	312	58	64	67	0.051	1.001	54.278	6493
336	52.097	51.132		0.16	0.15	1.32	0.98	0.38	71	71	67	3.25	1.80	104	0.045	102	100	15.4	0.82	6.45	15.4	119.7	181.7	133.5	51.4	171.0	312	58	63	67	0.051	1.001	53.804	6447
337	52.255	51.284		0.16	0.15	1.31	0.98	0.38	71	71	67	3.23	1.80	104	0.043	104	103	15.1	0.30	6.61	15.4	119.3	181.4	133.3	51.4	170.7	312	58	63	67	0.049	1.001	55.094	6583
338	52.413	51.435		0.16	0.15	1.33	0.98	0.38	71	71	67	3.23	1.80	104	0.048	99	96	14.4	0.68	6.24	15.3	118.8	180.7	133.1	51.4	170.2	312	58	63	67	0.051	1.001	52.025	6190
339	52.571	51.586		0.16	0.15	1.32	0.98	0.38	71	71	67	3.21	1.80	104	0.047	100	98	14.4	-0.03	6.55	15.4	119.3	181.4	133.3	51.4	170.7	312	58	63	67	0.050	1.001	54.613	6524
340	52.728	51.737		0.16	0.15	1.33	0.98	0.38	71	71	67	3.21	1.80	104	0.044	103	101	13.9	0.50	6.31	15.4	119.5	181.6	133.3	51.4	170.9	313	58	63	67	0.047	1.001	52.595	6292
341	52.887	51.889		0.16	0.15	1.33	0.98	0.38	71	71	67	3.21	1.90	103	0.044	104	101	12.9	0.98	6.58	15.3	119.9	182.0	133.6	51.4	171.2	311	58	63	67	0.050	1.001	54.884	6587
342	53.046	52.041		0.16	0.15	1.33	0.99	0.38	71	71	67	3.18	1.80	104	0.046	102	99	12.3	0.60	6.53	15.3	119.4	181.5	133.2	51.4	170.7	312	58	63	67	0.050	1.001	54.444	6508
343	53.205	52.193		0.16	0.15	1.34	0.99	0.38	71	71	67	3.18	1.80	104	0.044	104	101	11.1	1.28	6.53	15.4	119.5	181.6	133.3	51.4	170.9	311	58	63	67	0.051	1.001	54.453	6516
344	53.365	52.346		0.16	0.15	1.34	0.99	0.38	71	71	67	3.16	1.80	103	0.045	103	101	11.8	-0.77	6.49	15.4	119.4	181.4	133.3	51.4	170.8	312	58	63	67	0.051	1.001	54.129	6471
345	53.524	52.498		0.16	0.15	1.34	0.98	0.38	71	71	67	3.16	1.80	104	0.044	104	101	10.1	1.74	6.53	15.3	119.4	181.4	133.4	51.4	170.8	314	58	63	67	0.051	1.001	54.447	6511
346	53.683	52.650		0.16	0.15	1.35	1.00	0.38	71	71	67	3.14	1.80	104	0.044	104	101	9.5	0.56	6.51	15.3	119.7	181.8	133.6	51.4	171.1	313	58	63	67	0.050	1.001	54.291	6507
347	53.843	52.803		0.16	0.15	1.35	0.99	0.38	71	71	67	3.14	1.80	104	0.047	101	99	9.8	-0.29	6.51	15.3	119.8	181.8	133.6	51.4	171.1	313	58	63	67	0.050	1.001	54.292	6510
348	54.003	52.954		0.16	0.15	1.36	0.98	0.38	71	71	67	3.12	1.80	103	0.044	104	101	9.4	0.44	6.67	15.3	119.4	181.5	133.4	51.4	170.8	313	58	63	67	0.049	1.001	55.664	6656
349	54.162	53.106		0.16	0.15	1.36	0.99	0.38	71	71	67	3.11	1.80	103	0.044	104	101	9.2	0.22	6.64	15.4	119.6	181.7	133.4	51.4	171.0	312	58	63	67	0.052	1.001	55.346	6629
350	54.320	53.259		0.16	0.15	1.32	0.99	0.38	71	71	67	3.05	1.80	103	0.047	100	99	9.0	0.14	6.53	15.4	119.9	182.0	133.7	51.4	171.3	312	58	63	67	0.049	1.001	54.451	6535
351	54.479	53.410		0.16	0.15	1.33	0.99	0.38	71	71	67	3.02	1.80	103	0.047	100	97	7.9	1.10	6.66	15.3	119.8	182.0	133.5	51.4	171.2	312	58	63	67	0.050	1.001	55.584	6670
352	54.638	53.563		0.16	0.15	1.34	0.99	0.38	71	71	67	3.01	1.80	103	0.045	103	101	6.9	0.96	6.72	15.3	119.4	181.5	133.4	51.4	170.8	312	58	62	67	0.049	1.001	56.068	6704
353	54.796	53.715		0.16	0.15	1.32	0.99	0.38	71	71	67	2.98	1.80	103	0.045	102	100	6.7	0.20	6.41	15.4	119.6	181.7	133.5	51.4	171.0	312	58	62	67	0.050	1.001	53.480	6404

Elapsed Time	Particulate Sampling Data																	Fuel Weight, lb		Flow, gpm		Temperature Data, oF															
	Gas Meter Cubic Feet (1)	Gas Meter Cubic Feet (2)	Gas Meter Cubic Feet (amb)	Sample Rate, cfm (1)	Sample Rate, cfm (2)	Orifice dH (1)	Orifice dH (2)	Orifice dH (amb)	Meter oF (1)	Meter oF (2)	Meter oF (amb)	Meter Vac. In. Hg. (1)	Meter Vac. In. Hg. (2)	Dilution Tunnel Temp.	Dilution Tunnel dP	Pro. Rate (%) (1)	Pro. Rate (%) (2)	Scale Reading	Weight Change	Load Side Liquid Flow Rate	Boiler Side Liquid Flow Rate (optional)	Thermopile ΔT	Boiler to Heat Exch. Temp.	Heat Exch to Boiler Temp.	Inlet Load Temp.	Outlet Load Temp.	Stack	Filter (1)	Filter (2)	Ambient	Stack Draft	Specific Heat of Inlet Water (BTU/lb-°F)	Mass Flow Rate of Inlet Water (lb/min)	Heat Output, Btu
354	54.954	53.867		0.16	0.15	1.32	0.99	0.38	71	71	67	2.97	1.80	103	0.043	104	103	6.9	-0.12	6.41	15.4	119.5	181.7	133.3	51.4	170.9	312	58	62	67	0.051	1.001	53.481	6398
355	55.112	54.019		0.16	0.15	1.32	0.99	0.38	71	71	68	2.96	1.80	103	0.046	101	99	5.0	1.84	6.88	15.3	119.6	181.7	133.4	51.4	171.0	311	58	62	68	0.049	1.001	57.356	6869
356	55.270	54.172		0.16	0.15	1.33	1.00	0.38	71	71	68	2.95	1.80	102	0.047	100	99	4.9	0.14	6.55	15.4	119.6	181.7	133.5	51.4	171.0	311	58	62	68	0.050	1.001	54.619	6540
357	55.429	54.324		0.16	0.15	1.33	1.00	0.38	71	71	68	2.92	1.80	102	0.046	101	99	4.7	0.23	6.39	15.4	119.7	181.7	133.6	51.4	171.0	311	58	62	68	0.051	1.001	53.316	6388
358	55.588	54.476		0.16	0.15	1.34	0.99	0.38	71	71	68	2.92	1.80	103	0.044	104	101	4.2	0.46	6.58	15.3	119.7	181.9	133.5	51.4	171.1	312	58	62	68	0.050	1.001	54.841	6574
359	55.747	54.630		0.16	0.15	1.34	1.00	0.38	71	71	68	2.93	1.80	102	0.046	101	100	3.7	0.49	6.35	15.3	120.1	182.1	133.8	51.4	171.4	311	58	62	68	0.050	1.001	52.996	6370
360	55.906	54.783		0.16	0.15	1.35	1.01	0.38	71	71	68	2.91	1.80	102	0.045	103	101	3.4	0.28	6.53	15.3	120.0	181.6	134.3	51.4	171.4	311	58	62	68	0.048	1.001	54.452	6542
361	56.066	54.937		0.16	0.15	1.34	1.01	0.38	71	71	68	2.90	1.80	102	0.045	103	101	3.2	0.22	6.59	15.3	119.2	181.3	133.2	51.4	170.6	311	58	62	68	0.051	1.001	54.937	6556
362	56.225	55.090		0.16	0.15	1.35	1.00	0.38	71	71	68	2.90	1.80	102	0.046	101	100	2.8	0.38	6.37	15.4	119.5	181.8	133.2	51.4	170.9	311	58	62	68	0.048	1.001	53.152	6360
363	56.385	55.244		0.16	0.15	1.35	1.02	0.38	71	71	68	2.89	1.80	103	0.045	103	102	2.5	0.29	6.68	15.2	119.5	181.6	133.4	51.4	170.9	312	58	62	68	0.049	1.001	55.746	6670
364	56.544	55.399		0.16	0.16	1.34	1.02	0.38	71	71	68	2.90	1.80	103	0.048	99	99	1.7	0.86	6.52	15.4	119.4	181.6	133.3	51.4	170.8	312	58	62	68	0.051	1.001	54.381	6503
365	56.703	55.553		0.16	0.15	1.34	1.02	0.38	71	71	68	2.89	1.70	102	0.042	106	105	0.8	0.84	6.36	15.3	119.3	181.4	133.2	51.4	170.7	311	58	62	68	0.049	1.001	53.082	6340
366	56.863	55.708		0.16	0.16	1.35	1.02	0.38	71	71	68	2.89	1.70	103	0.047	101	100	1.2	-0.33	6.49	15.3	119.4	181.5	133.2	51.4	170.8	312	58	62	68	0.050	1.001	54.145	6473
367	57.022	55.861		0.16	0.15	1.35	1.02	0.38	71	71	68	2.89	1.70	103	0.044	104	102	0.8	0.40	6.45	15.3	119.1	181.2	133.1	51.4	170.5	312	58	62	68	0.051	1.001	53.804	6416
368	57.182	56.016	113.458	0.16	0.16	1.35	1.02	0.38	71	71	68	2.89	1.70	104	0.045	103	102	0.0	0.77	6.64	15.4	119.1	181.2	133.2	51.4	170.5	313	58	62	68	0.049	1.001	55.417	6608
	57.182	56.016	113.458			1.29	0.99	0.38	71	72	68			105	0.045					6.51	15.37	116.1	177.9	131.2	51.5	167.5		70.98	70.21		0.05			6306
																														TOTAL:			2320587

TF_{avg}	157.173
TI_{avg}	157.202

Hydronic Heating Appliances - Test Method ASTM 2618
Fuel Moisture

Manufacturer:	Central Boiler - WoodMaster
Model:	Edge 960 - CleanFire 900
Tracking No.:	2430
Project No.:	0117WB041E
Technician:	BD, TT
Run #:	1
Test Date:	December 9, 2020

Wet Weight (lb)	% Moisture				
9.9	19.3	20.4	20.2	22	21
10	26.3	18	27	22	24.9
10.9	20.4	21.4	20.8	19.6	19.1
9.4	19.7	19.1	18.6	19	19.2
10	21	20.1	23.2	24.3	20.6
11.1	21.5	20.7	18.9	19.1	18.4
10.7	18.1	18.1	18.1	21	20.7
10.6	22.4	20.9	18.2	18.1	18.9
9.7	23.8	27.9	26.3	22.9	22.5
9.8	20.5	20.6	19.6	18.6	18.6
10.8	20.8	21.6	18	21.4	25.1
10.8	21.8	23	20.7	20.9	18.3
9.7	26.3	25	23.7	20.7	20.2
11.9	21.5	22.8	22.8	25.4	27.5
10	18.3	19.5	21.7	19.1	27.1
10.5	24.1	24.9	23.4	18.2	18.3
11	18.7	18.2	20.7	20.7	20.4
10.5	22	24.5	22	22.1	21.6
10.1	27	23.7	25.1	18.1	19.1
11	20.1	18.7	22.3	27	20.6
9.6	20.8	22.8	21.2	18.1	18
10	20.9	21.5	18.4	19.3	25.2
10.2	18	18.3	18.3	21	21.6
9.7	21.8	18.6	21.2	20.7	21.2
9.9	20.6	21.9	18.1	18	19
10.8	20.6	23	23.8	18	21
10.2	19	18.3	19.7	18.9	20.6
10.2	21.2	21	22.1	18.6	18.2
10.9	18.1	23.4	18	18.4	21.7
10	21.6	20.9	20.1	20.7	18.2
9	20.9	18.6	18.9	18.1	20.9
11.2	24.7	23.6	21.7	20.9	25.8
10.4	20.6	20.8	26.3	24.2	22.9
10.3	20.6	18.9	19.1	19.1	18
10.9	18.1	20.6	20.8	18.6	21.4
9.2	20.7	22.5	18.2	21.2	19.4
9.1	21.2	19.1	21.2	20.8	18.4
9.8	26.8	22.4	27.8	19.4	20

Total Weight of Load (lb):	389.8
Total Moisture of Load (%):	21.0

Equipment Numbers:

Hydronic Heating Appliances - Test Method ASTM 2618
Results

Manufacturer: Central Boiler - WoodMaster
Model: Edge 960 - CleanFire 900
Tracking No.: 2430
Project No.: 0117WB041E
Run #: 1
Date: 12/9/20

Equipment Numbers:

TRAIN 1 (First Hour emissions)

Sample Component	Reagent	Filter, Probe or Dish #	Weights		
			Final, mg	Tare, mg	Particulate, mg
B. Front filter catch	Filter	E101	120.9	120.3	0.6
C. Rear filter catch	Filter	E108	121.7	119.9	1.8
D. Probe catch*	Probe	18	114400.7	114400.2	0.5
E. Filter seals catch*	Seals	S044	4117.4	4116.1	1.3

Sub-Total | Total Particulate, mg: | 4.2

TRAIN 1

Sample Component	Reagent	Filter, Probe or Dish #	Weights		
			Final, mg	Tare, mg	Particulate, mg
A. Front filter catch (remainder)	Filter		1207.9	1196.4	11.5
B. Rear filter catch	Filter		480.4	477.4	3.0
C. Probe catch*	Probe	22	114340.9	114341.0	0.0
D. Filter seals catch*	Seals	S045	4120.0	4118.9	1.1

Sub-Total | Total Particulate, mg: | 15.6

Total Particulate, mg: | 19.8

TRAIN 2

Sample Component	Reagent	Filter, Probe or Dish #	Weights		
			Final, mg	Tare, mg	Particulate, mg
A. Front filter catch	Filter		1324.0	1313.5	10.5
B. Rear filter catch	Filter		841.9	837.3	4.6
C. Probe catch*	Probe	21	114390.6	114389.8	0.8
D. Filter seals catch*	Seals	S046	3343.6	3342.3	1.3

Total Particulate, mg: | 17.2

AMBIENT

Sample Component	Reagent	Filter # or Probe #	Weights		
			Final, mg	Tare, mg	Particulate, mg
A. Front filter catch*	Filter	E107	119.7	119.4	0.3

Total Particulate, mg: | 0.3

*Any particulate catch that results in a negative number, is assumed to be zero

Component	Equations:
A. Front filter catch	Final (mg) - Tare (mg) = Particulate, mg
B. Rear filter catch	Final (mg) - Tare (mg) = Particulate, mg
C. Probe catch	Final (mg) - Tare (mg) = Particulate, mg

OMNI-Test Laboratories, Inc. **ASTM E2780 Wood Heater Run Sheets**

Client: Central Boiler WoodMaster Project Number: 0117WB041E Run Number: 1

Model: Edge 960 ClearFire 900 Tracking Number: 2430 Date: 12/09/2020

Test Crew: Bruce Davis, Tony Tong

OMNI Equipment ID numbers: _____

Wood Heater Supplemental Data

Start Time: 17:00 Booth #: 3

Stop Time: 23:08

Stack Gas Leak Check:

Initial: good Final: good

Sample Train Leak Check:

A: 0.00 @ 10 "Hg

B: 0.00 @ 8 "Hg

Calibrations: Span Gas CO_2: 16.94% CO: 4.32%

	Pre Test		Post Test	
	Zero	Span	Zero	Span
Time	16:00	16:03	11:~~20~~	11:26
CO_2	0.00	17.33	-0.04	17.19
CO	0.000	4.36	4 ppm	~~4.356~~ 4.373

Air Velocity (ft/min): Initial: good Final: <50

Scale Audit (lbs): Initial: 10 Final: 10

Pitot Tube Leak Test: Initial: good Final: good

Stack Diameter (in): 8

Induced Draft: 0.00

% Smoke Capture: 100

Flue Pipe Cleaned Prior to First Test in Series:

Date: 12/8/20 Initials: SA

	Initial	Middle	Ending
P_b (in/Hg)	30.40		30.34
RH (%)			
Ambient (°F)	~~70~~		68

Tunnel Traverse

Microtector Reading	dP (in H_2O)	T(°F)
1	.044	110
2	.050	108
3	.054	110
4	.052	111
5	.045	111
6	.038	111
7	.042	111
8	.046	111
9	.052	111
10	.052	111
11	.050	111
12	.036	111
Center:		
	.048	109

Background Filter Volume: 113.458

Tunnel Static Pressure (in H_2O):	
Beginning of Test	End of Test
-.516	-.516

Technician Signature: _____ Date: 12/9/20

OMNI-Test Laboratories, Inc. **ASTM E2780 Wood Heater Run Sheets**

Client: Central Boiler (Woodmaster) Project Number: 0117WB041E Run Number: 1
Model: Edge 960 (Clean-Fire 900) Tracking Number: 2430 Date: 12/09/2020
Test Crew: Bruce Davis, Tony Tong
OMNI Equipment ID numbers:

Wood Heater Run Notes

Air Control Settings

Primary:

Automatic
Heat draw set @ 165-185
Comb. blower on @ 165 and off @ 185 °F

Secondary: fixed

Tertiary/Pilot: N/A

Fan: Automatic

Preburn Notes

Time	Notes
ϕ	Operated @ maximum BTU entree test

Test Notes

Sketch test fuel configuration:

See photo

Start up procedures & Timeline:

Bypass: N/A
Fuel loaded by: 3.5 minutes
Door closed at: Closed @ 4:00
Primary air: Automatic

Notes:

Time	Notes
17:30	changing front filter of train B
17:35	changing both front and rear filters of train A

Technician Signature: Date: 12/9/20

Wood Heater Run Sheets

Client: Central Boiler, WoodMaster Project Number: 0117WB041E Run Number: 1
Model: Edge 960, CleanFire 900 Tracking Number: 2430 Date: 12/9/20
Test Crew: BD, TT, RT
OMNI Equipment ID numbers:

Central Boiler filter change

~~A~~ ~~B~~

- Replaced FRONT FILTER ~~A~~ A at 18:00 with E114
- Replaced front filter B at 1807 E115
- 1 hour filter replaced at 1807
- Replaced filter B Front: E117 Rear: E116 at 1825
- ~~Replaced front filter~~
- Replaced Filter A front with E118 at 1833
- Replaced filter B front at 18:50 E119
- Replaced filter A front at 18:55 E120
- Replaced filter B rear with E121
- Replaced filter B front E122 } = 19:17
- Replaced filter A front E123
- Replaced fiter A Rear E124 at 19:20
- Replaced filter A front E125 at 1935
- Replaced filter B front E126 Rear E127 1944
- Replaced filter A rear E128 } 1955
- Replaced filter A front E129
- Replaced filter A front E130 } 20:18
- Replaced filter B front E131
- Replaced filter A front E132 20:56
- Replaced filter B front E133 20:57
- Replaced ~~rear~~ filter B rear E134 20:59
- Replaced filter B front E135 22:00
- Replaced filter B rear E136 22:06

23:15 = Test complete

Technician Signature: Date: 12/9/20

OMNI-Test Laboratories, Inc.

Manufacturer: Central Boiler, WoodMaster
Model: Edge 960, CleanFire 900
Date: 12/09/20
Run: 1
Control #: 0117WB041E
Test Duration: 368
Output Category: IV

Technicians: B. Davis

Test Results in Accordance with CSA B415.1-09

	HHV Basis	LHV Basis
Overall Efficiency	83.7%	89.6%
Combustion Efficiency	99.5%	99.5%
Heat Transfer Efficiency	84%	90.0%

Output Rate (kJ/h)	398,611	378,125	**(Btu/h)**
Burn Rate (kg/h)	23.83	52.52	**(lb/h)**
Input (kJ/h)	475,957	451,496	**(Btu/h)**

Test Load Weight (dry kg)	146.16	322.13	**dry lb**
MC wet (%)	17.36		
MC dry (%)	21.01		
Particulate (g)	86.35		
CO (g)	722		
Test Duration (h)	6.13		

Emissions	Particulate	CO
g/MJ Output	N/A	0.30
g/kg Dry Fuel	N/A	4.94
g/h	N/A	117.69
lb/MM Btu Output	N/A	0.69

Air/Fuel Ratio (A/F)	7.04

VERSION: **2.3** **3/23/2010**

VERSION: 2.3 3/23/2010

Manufacturer:	Central Boiler, WoodMaster	**Appliance Type:**	Non-Cat
Model:	Edge 960, CleanFire 900		
Date:	12/9/2020	**Temp. Units**	F (F or C)
Run:	1	**Weight Units**	lb (kg or lb)
Control #:	0117WB041E		
Test Duration:	368		
Output Category:	IV		

		Fuel Data		
			Maple	
Wood Moisture (% wet):	17.36	**HHV**	19,973	kJ/kg
Load Weight (lb wet):	389.80	**%C**	50.64	
Burn Rate (dry kg/h):	23.82	**%H**	6.02	
Total Particulate Emissions:	86.35 g	**%O**	41.74	
		%Ash	1.35	

Averages	**0.07**	**15.90**	**#DIV/0!**	**307.55**	**67.92**	
					Temp. (ºF)	
Elapsed Time (min)	**Fuel Weight Remaining (lb)**	**Flue Gas Composition (%) CO**	**CO_2**	**O_2**	**Flue Gas**	**Room Temp**
0	389.80	0.04	14.94		306.0	70
1	387.60	0.06	13.72		274.0	70
2	386.40	0.00	11.23		253.0	70
3	384.52	0.16	10.66		289.0	70
4	383.07	0.52	19.35		298.0	70
5	382.51	0.05	15.10		296.0	70
6	380.19	0.07	17.95		300.0	70
7	380.08	0.06	15.57		298.0	70
8	378.05	0.08	18.04		297.0	70
9	376.59	0.06	15.45		300.0	70
10	376.35	0.07	18.09		297.0	70
11	375.10	0.06	16.19		302.0	70
12	373.14	0.06	17.47		305.0	70
13	371.90	0.06	17.39		305.0	70
14	370.32	0.06	17.27		306.0	70
15	369.00	0.06	17.13		306.0	70
16	368.65	0.06	17.06		306.0	70
17	366.36	0.05	16.69		305.0	70
18	365.87	0.05	16.47		305.0	70
19	364.65	0.06	16.80		305.0	70
20	363.43	0.05	16.44		304.0	70
21	361.36	0.05	16.34		304.0	70

22	360.69	0.05	16.34		304.0	70
23	359.87	0.06	16.51		304.0	70
24	358.01	0.06	16.84		306.0	70
25	355.80	0.06	17.07		306.0	70
26	355.31	0.07	16.94		306.0	70
27	354.36	0.07	16.84		306.0	70
28	352.50	0.07	16.81		306.0	70
29	350.84	0.07	16.92		306.0	70
30	349.02	0.07	16.90		306.0	70
31	348.57	0.07	16.99		306.0	70
32	346.83	0.07	16.91		306.0	70
33	345.57	0.07	16.88		306.0	70
34	342.95	0.07	16.95		306.0	70
35	342.23	0.07	16.99		306.0	70
36	340.20	0.07	16.99		306.0	70
37	338.68	0.07	17.00		307.0	70
38	337.79	0.07	17.04		307.0	70
39	336.23	0.07	17.17		307.0	70
40	334.47	0.07	17.31		308.0	70
41	333.06	0.07	17.39		308.0	70
42	330.79	0.07	17.55		309.0	70
43	329.96	0.08	17.74		309.0	70
44	327.99	0.08	17.91		310.0	69
45	326.62	0.08	18.06		311.0	69
46	325.83	0.08	18.16		308.0	69
47	324.09	0.08	17.72		309.0	69
48	322.41	0.08	17.56		309.0	70
49	320.77	0.08	17.82		310	69
50	319.56	0.08	17.72		310	69
51	317.69	0.08	17.7		310	69
52	316.80	0.08	17.7		310	69
53	314.88	0.08	17.79		311	69
54	312.96	0.09	17.92		311	70
55	311.50	0.08	17.47		309	69
56	310.49	0.08	17.57		310	69
57	309.35	0.08	17.76		311	69
58	307.62	0.09	17.86		311	69
59	305.76	0.08	17.08		310	69
60	304.70	0.08	17.31		309	69
61	303.09	0.08	17.34		309	69
62	301.97	0.08	17.4		310	69
63	299.67	0.08	17.51		310	69

64	298.48	0.08	17.42		310	69
65	296.90	0.09	17.55		310	69
66	295.89	0.08	17.53		310	69
67	293.82	0.09	17.58		311	69
68	292.77	0.09	17.48		310	69
69	291.77	0.08	17.37		310	69
70	289.29	0.08	17.3		310	69
71	287.98	0.08	17.19		309	69
72	286.91	0.08	17.12		309	69
73	285.19	0.08	17.15		309	69
74	283.34	0.08	17.11		309	69
75	282.54	0.08	17.19		310	69
76	281.86	0.08	17.21		310	69
77	280.46	0.08	17.41		310	69
78	278.68	0.08	17.39		310	69
79	277.04	0.07	16.78		308	69
80	275.68	0.07	17.24		309	69
81	274.54	0.07	17.28		308	69
82	273.49	0.06	15.68		307	69
83	271.92	0.07	17.21		308	69
84	269.90	0.07	16.1		307	69
85	268.83	0.08	17.35		308	69
86	267.35	0.08	17.47		305	69
87	266.69	0.09	17.44		308	69
88	265.96	0.08	17.19		308	69
89	263.64	0.08	17.31		309	69
90	261.32	0.08	17.48		307	69
91	261.03	0.09	17.63		306	69
92	259.48	0.07	15.97		307	69
93	258.78	0.08	17.26		305	69
94	256.95	0.08	17.43		308	69
95	255.15	0.07	17.19		308	69
96	254.20	0.07	17.26		309	69
97	252.37	0.08	17.23		309	69
98	251.92	0.08	17.23		310	69
99	249.69	0.08	17.21		310	68
100	248.40	0.08	17.29		310	69
101	247.22	0.08	17.26		310	69
102	246.30	0.08	17.19		310	69
103	244.43	0.07	16.97		310	69
104	242.74	0.07	17.03		311	69
105	242.48	0.07	15.41		308	68

106	240.45	0.07	16.42		308	68
107	239.52	0.07	16.44		308	68
108	237.83	0.07	16.41		308	68
109	236.62	0.07	16.41		307	68
110	235.17	0.07	16.32		307	68
111	233.87	0.06	16.2		307	68
112	232.97	0.06	16.1		306	68
113	232.23	0.06	16.08		307	68
114	230.45	0.06	16.21		307	68
115	228.77	0.07	16.38		308	68
116	227.33	0.07	16.69		309	68
117	226.32	0.08	17.18		310	68
118	225.03	0.07	17.15		309	68
119	223.68	0.07	16.83		309	68
120	221.42	0.07	16.73		309	68
121	220.81	0.07	16.6		308	68
122	219.75	0.07	16.53		308	68
123	217.55	0.07	16.54		307	68
124	216.51	0.07	16.34		307	68
125	215.71	0.07	16.32		306	68
126	213.79	0.07	16.18		306	68
127	212.73	0.07	16.12		305	68
128	211.91	0.06	15.98		308	68
129	211.77	0.07	16.4		308	68
130	208.97	0.07	16.18		310	68
131	208.57	0.06	16.12		312	68
132	206.79	0.06	16.24		308	68
133	205.98	0.07	16.33		307	68
134	204.83	0.07	16.21		310	68
135	202.96	0.06	16.13		310	68
136	201.82	0.07	16.18		309	68
137	200.41	0.08	16.27		308	68
138	199.05	0.07	16.23		309	68
139	198.18	0.07	16.1		314	68
140	196.69	0.06	16.1		312	68
141	195.81	0.07	16		312	68
142	194.07	0.06	15.94		309	68
143	193.05	0.07	15.78		311	68
144	191.47	0.06	15.94		312	68
145	190.72	0.06	15.89		312	68
146	189.60	0.06	15.92		314	68
147	188.56	0.06	15.94		317	68

148	186.43	0.07	16.24		312	68
149	185.28	0.07	16.13		309	68
150	184.59	0.07	16.02		309	68
151	183.86	0.06	16		314	68
152	182.98	0.06	15.76		312	68
153	180.89	0.06	15.81		309	68
154	179.95	0.07	15.93		310	68
155	178.68	0.06	15.93		312	68
156	177.33	0.06	15.79		313	68
157	176.28	0.06	15.92		312	68
158	175.54	0.06	15.92		308	68
159	174.99	0.06	15.81		310	68
160	173.43	0.06	15.81		309	68
161	172.59	0.06	15.85		309	68
162	171.16	0.06	15.84		312	68
163	169.48	0.06	15.83		313	68
164	167.94	0.06	15.82		311	68
165	167.24	0.06	15.86		313	68
166	166.24	0.06	15.7		308	68
167	165.96	0.06	15.64		309	68
168	163.28	0.06	15.65		307	68
169	162.85	0.06	15.78		306	68
170	162.36	0.06	15.62		307	68
171	161.04	0.07	15.81		306	68
172	160.32	0.06	15.61		306	68
173	158.75	0.06	15.7		306	68
174	157.49	0.06	15.81		306	68
175	156.05	0.06	15.79		306	67
176	155.29	0.06	15.74		306	67
177	154.12	0.06	15.76		306	67
178	153.24	0.06	15.67		306	68
179	151.83	0.06	15.62		305	67
180	150.11	0.06	15.51		308	67
181	149.97	0.06	15.7		306	67
182	148.95	0.06	15.68		306	67
183	147.35	0.06	15.66		305	67
184	146.51	0.06	15.76		305	67
185	145.95	0.06	15.73		305	67
186	144.79	0.06	15.78		305	67
187	143.55	0.06	15.83		305	67
188	142.78	0.06	15.81		305	67
189	141.48	0.07	15.98		305	67

190	139.89	0.07	15.9		304	67
191	138.82	0.07	15.83		304	67
192	137.96	0.07	15.85		304	67
193	137.06	0.07	15.81		304	67
194	135.15	0.07	15.88		304	67
195	134.60	0.07	15.89		304	67
196	133.65	0.07	16.05		305	67
197	133.00	0.07	16.21		305	67
198	131.96	0.07	16.25		305	67
199	130.57	0.07	16.17		305	67
200	129.73	0.07	16.3		306	67
201	128.21	0.07	16.42		306	67
202	127.58	0.07	16.43		306	67
203	126.34	0.07	16.53		306	67
204	125.05	0.07	16.6		306	67
205	123.80	0.07	16.58		307	67
206	122.21	0.07	16.61		307	67
207	122.31	0.07	16.6		307	67
208	120.11	0.07	16.58		307	67
209	120.34	0.07	16.57		307	67
210	117.85	0.07	16.53		307	67
211	117.23	0.06	16.41		307	67
212	116.54	0.06	16.43		306	67
213	115.64	0.06	16.42		307	67
214	114.02	0.06	16.28		307	67
215	113.14	0.06	16.34		307	67
216	112.31	0.06	16.27		306	67
217	110.90	0.06	16.34		307	67
218	110.28	0.06	16.38		307	67
219	108.72	0.05	16.38		307	67
220	107.50	0.05	16.36		307	67
221	106.23	0.05	16.63		308	67
222	105.41	0.06	16.76		306	67
223	104.07	0.06	16.65		307	67
224	103.50	0.06	16.44		307	67
225	103.06	0.05	16.59		307	67
226	101.39	0.05	15.24		307	67
227	100.49	0.05	16.59		308	67
228	99.30	0.05	16.43		307	67
229	98.00	0.05	16.25		307	67
230	97.16	0.05	16.18		307	67
231	95.61	0.05	16.15		307	67

232	94.78	0.05	16.06		307	67
233	94.45	0.05	15.95		307	67
234	92.84	0.05	15.88		306	67
235	92.89	0.05	15.75		306	67
236	92.08	0.05	15.79		306	67
237	90.92	0.05	15.83		306	67
238	89.91	0.05	15.74		306	67
239	88.76	0.05	15.68		306	67
240	86.94	0.04	15.67		305	67
241	86.03	0.04	15.66		305	67
242	86.24	0.04	15.68		306	67
243	83.78	0.04	15.73		306	67
244	84.07	0.04	16.03		307	67
245	83.04	0.04	16.01		307	67
246	81.41	0.04	15.84		306	67
247	80.98	0.04	15.73		306	67
248	79.52	0.04	15.64		306	67
249	79.38	0.04	15.57		305	67
250	77.84	0.04	15.46		304	67
251	77.59	0.05	15.48		304	67
252	76.32	0.05	15.41		304	67
253	76.78	0.04	15.4		303	67
254	75.99	0.04	15.38		304	67
255	74.07	0.04	15.37		303	67
256	73.00	0.04	15.35		303	67
257	72.42	0.04	15.29		303	67
258	71.07	0.04	15.37		303	67
259	70.00	0.04	15.26		303	67
260	69.35	0.04	15.29		302	67
261	68.77	0.04	15.19		302	67
262	68.52	0.04	15.09		301	67
263	67.70	0.04	15.07		301	67
264	66.58	0.04	15.11		302	67
265	66.54	0.04	15.09		302	67
266	64.34	0.04	15.13		302	67
267	64.12	0.04	15.1		302	67
268	64.21	0.04	15.06		302	67
269	62.52	0.04	14.99		301	67
270	61.62	0.04	14.89		301	67
271	61.58	0.04	14.78		302	67
272	59.67	0.04	14.83		301	67
273	60.20	0.04	14.85		301	67

274	58.04	0.04	14.76		301	67
275	58.44	0.04	14.87		303	67
276	56.16	0.04	15.05		306	67
277	56.94	0.04	14.92		303	67
278	54.89	0.04	14.84		306	67
279	55.69	0.04	15.07		303	67
280	53.68	0.04	14.79		304	67
281	52.71	0.04	14.97		306	67
282	51.26	0.04	14.89		307	67
283	51.42	0.04	14.92		306	67
284	50.21	0.04	15.19		306	67
285	49.62	0.04	15.22		308	67
286	48.16	0.04	15.19		308	67
287	48.12	0.04	14.91		307	67
288	47.64	0.04	14.95		308	67
289	46.77	0.04	14.71		307	67
290	46.09	0.04	14.73		307	67
291	45.51	0.05	15.06		308	67
292	44.96	0.05	14.8		307	67
293	44.17	0.05	14.92		307	67
294	42.86	0.05	15.1		307	67
295	42.31	0.05	15		310	67
296	41.39	0.05	15.05		309	67
297	41.26	0.05	14.68		310	67
298	39.44	0.05	14.92		311	67
299	38.63	0.05	14.85		312	67
300	39.10	0.05	14.94		309	67
301	37.13	0.05	14.63		311	67
302	37.03	0.05	14.76		311	67
303	34.54	0.05	14.71		311	67
304	35.31	0.05	14.69		310	67
305	35.08	0.05	14.56		310	67
306	33.42	0.05	14.52		310	67
307	33.14	0.05	14.45		310	67
308	32.60	0.05	14.37		310	67
309	32.08	0.05	14.34		310	67
310	32.18	0.05	14.22		310	67
311	31.14	0.05	14.8		310	67
312	30.09	0.05	14.26		310	67
313	29.56	0.05	14.23		310	67
314	28.88	0.05	14.23		311	67
315	28.12	0.05	14.89		310	67

316	27.44	0.05	14.26		311	67
317	26.93	0.05	14.71		310	67
318	26.82	0.05	14.26		311	67
319	25.92	0.05	14.91		311	67
320	24.87	0.05	14.26		311	67
321	24.25	0.05	14.88		311	67
322	23.53	0.05	14.57		312	67
323	22.72	0.05	14.32		312	67
324	22.53	0.06	15		312	67
325	21.67	0.06	14.35		311	67
326	22.06	0.06	14.38		311	67
327	21.67	0.06	14.56		313	67
328	20.72	0.06	14.92		311	67
329	19.37	0.06	14.58		314	67
330	18.57	0.06	14.85		312	67
331	18.61	0.05	14.78		314	67
332	18.63	0.05	14.73		312	67
333	17.05	0.05	14.76		312	67
334	16.85	0.05	14.34		312	67
335	16.17	0.06	14.94		312	67
336	15.35	0.05	14.36		312	67
337	15.06	0.05	14.3		312	67
338	14.38	0.05	14.79		312	67
339	14.41	0.06	14.78		313	67
340	13.91	0.05	14.49		311	67
341	12.94	0.05	14.21		312	67
342	12.33	0.05	14.17		311	67
343	11.06	0.05	14.66		312	67
344	11.82	0.05	14.16		314	67
345	10.09	0.05	14.85		313	67
346	9.53	0.05	14.2		313	67
347	9.81	0.06	14.86		313	67
348	9.37	0.05	14.32		312	67
349	9.15	0.05	14.34		312	67
350	9.01	0.05	14.28		312	67
351	7.91	0.05	14.3		312	67
352	6.95	0.04	14.19		312	67
353	6.75	0.05	14.2		312	67
354	6.87	0.05	14.17		311	68
355	5.02	0.05	14.13		311	68
356	4.89	0.05	14.07		311	68
357	4.66	0.05	14.06		312	68

358	4.20	0.05	14.09		311	68
359	3.71	0.05	14.09		311	68
360	3.42	0.07	14.01		311	68
361	3.20	0.06	13.99		311	68
362	2.82	0.07	13.83		312	68
363	2.54	0.09	13.93		312	68
364	1.68	0.12	14.19		311	68
365	0.84	0.17	13.76		312	68
366	1.16	0.32	13.55		312	68
367	0.77	0.66	13.79		313	68
368	0.00	1.05	13.5		314	68

Run 1
Proportional Rate verification

Test data was edited by changing recording interval from 1 minute to 10 minutes. This was done to demonstrate maximum data points outside of the 90 to 110 percent proportionate rate specification.

Hydronic Heating Appliances - Test Method ASTM 2618
Test Data

Run: 1

Manufacturer: Central Boiler, Wood Master
Model: Edge 960, CleanFire 900
Tracking No.: 2430
Project No.: 0117WB041E
Test Date: December 9, 2020
Technician: B Davis
Beginning Clock Time: 17:00
Recording Interval: 10 min.
Total Sampling Time: 368 min.

Velocity Traverse Data	Pt.1	Pt.2	Pt.3	Pt.4	Pt.5	Pt.6	Pt.7	Pt.8	Pt.9	Pt.10	Pt.11	Pt.12	Center	
Initial dP	0.044	0.050	0.054	0.052	0.045	0.038	0.042	0.046	0.052	0.052	0.050	0.036	0.048	"H2O
Initial Temp.	110	108	110	111	111	111	111	111	111	111	111	111	109	oF

Air Velocity: Initial: <50 Final: <50 V_{strav} 14.76 ft/sec
Scale Audit: Pre: 10.0 Post: 10.0 Induced Draft: 0 V_{scent} 14.96 ft/sec
Pitot Tube Leak Test: Pre: 0 Post: 0 % Smoke Capture: 100 F_p 0.986
Flue Pipe Cleaned Prior to First Test in Series: Date:

PM Control Module: 335, 336
Dilution Tunnel MW(dry): 29.00 lb/lb-mole
Dilution Tunnel MW(wet): 28.78 lb/lb-mole
Dilution Tunnel H2O: 2.00 percent
Dilution Tunnel Static: -0.516 "H2O
Pitot Tube Cp: 0.99

Meter Box Y Factor:	(1) 1.013	(2) 0.997	(amb) 0.97
Barometric Pressure:	Begin 30.40	Middle 30.37	End 30.34

Average 30.37 "Hg

Tunnel Velocity: 14.34 ft/sec.
Intial Tunnel Flow: 628.5 scfm
Average Tunnel Flow: 627.5 scfm
Tunnel Area: 0.785 ft2
Post-Test Leak Check (1): 0.000 cfm @ 10 in. Hg
Post-Test Leak Check (2): 0.000 cfm @ 8 in. Hg
Fuel Moisture (dry basis %): 21.0
Total Particulate (1): 0.0
Total Particulate (2): 0.0

Elapsed Time	Particulate Sampling Data																Fuel Weight, lb		Flow, gpm		Temperature Data, oF										Stack Draft	Specific Heat of Inlet Water (BTU/lb-°F)	Mass Flow Rate of Inlet Water (lb/min)	Heat Output, Btu
	Gas Meter Cubic Feet (1)	Gas Meter Cubic Feet (2)	Gas Meter Cubic Feet (amb)	Sample Rate, cfm (1)	Sample Rate, cfm (2)	Orifice dH (1)	Orifice dH (2)	Orifice dH (amb)	Meter oF (1)	Meter oF (2)	Meter oF (amb)	Meter Vac. In. Hg. (1)	Meter Vac. In. Hg. (2)	Dilution Tunnel Temp.	Dilution Tunnel dP	Pro. Rate (%) (1)	Pro. Rate (%) (2)	Scale Reading	Weight Change	Load Side Liquid Flow Rate	Boiler Side Liquid Flow Rate (optional)	Thermopile ΔT	Boiler to Heat Exch. Temp.	Heat Exch to Boiler Temp.	Inlet Load Temp.	Outlet Load Temp.	Stack	Filter (1)	Filter (2)	Ambient				
0	0.000	0.000				0.98	0.90		67	66		2.45	1.30	106	0.046			389.8																
10	1.563	1.538		0.16	0.15	1.31	1.02		67	67		2.61	1.50	101	0.044	103	103	376.4	13.45													1.001	0.000	0
20	3.117	3.069		0.16	0.15	1.30	1.00		68	68		2.80	1.80	107	0.044	103	103	363.4	12.92													1.001	0.000	0
30	4.669	4.527		0.16	0.15	1.33	0.99		69	69		3.14	1.80	108	0.046	100	96	349.0	14.42													1.001	0.000	0
40	5.980	6.079		0.13	0.16	1.30	1.08		70	71		2.72	2.30	109	0.048	83	100	334.5	14.55													1.001	0.000	0
50	7.541	7.521		0.16	0.14	1.31	1.01		71	71		2.90	1.80	109	0.047	99	94	319.6	14.91													1.001	0.000	0
60	9.112	9.015		0.16	0.15	1.31	1.06		71	72		2.92	2.10	109	0.046	101	98	304.7	14.85													1.001	0.000	0
70	10.707	10.575		0.16	0.16	1.34	1.00		72	72		2.80	2.30	108	0.046	102	102	289.3	15.41													1.001	0.000	0
80	12.278	12.109		0.16	0.15	1.28	1.08		72	72		2.94	1.80	108	0.046	101	101	275.7	13.61													1.001	0.000	0
90	13.833	13.673		0.16	0.16	1.33	0.99		72	73		2.77	2.00	106	0.044	102	104	261.3	14.36													1.001	0.000	0
100	15.406	15.197		0.16	0.15	1.30	1.00		72	73		3.18	2.50	107	0.043	104	103	248.4	12.92													1.001	0.000	0
110	16.966	16.718		0.16	0.15	1.33	0.99		73	73		2.87	2.20	107	0.045	101	101	235.2	13.23													1.001	0.000	0
120	18.526	18.237		0.16	0.15	1.27	0.97		73	73		3.18	2.70	106	0.045	101	100	221.4	13.75													1.001	0.000	0
130	20.067	19.768		0.15	0.15	0.67	1.01		73	73		6.83	3.90	108	0.046	99	100	209.0	12.45													1.001	0.000	0
140	21.616	21.289		0.15	0.15	1.28	0.96		73	73		2.78	4.10	107	0.045	100	101	196.7	12.28													1.001	0.000	0
150	23.161	22.800		0.15	0.15	1.31	0.97		73	73		2.93	4.20	106	0.046	99	99	184.6	12.10													1.001	0.000	0
160	24.722	24.323		0.16	0.15	1.30	0.99		73	73		4.47	1.70	106	0.049	97	96	173.4	11.16													1.001	0.000	0
170	26.295	25.834		0.16	0.15	1.32	0.97		73	73		2.80	1.80	105	0.044	103	101	162.4	11.07													1.001	0.000	0
180	27.865	27.344		0.16	0.15	1.30	0.97		72	73		2.85	2.00	106	0.046	101	99	150.1	12.25													1.001	0.000	0
190	29.302	28.853		0.14	0.15	1.27	1.30		72	72		2.76	1.70	103	0.045	93	100	139.9	10.22													1.001	0.000	0
200	30.865	30.402		0.16	0.15	1.29	0.98		72	72		2.84	2.60	103	0.046	100	101	129.7	10.17													1.001	0.000	0
210	32.423	31.913		0.16	0.15	1.30	0.99		72	72		3.24	2.70	103	0.047	99	98	117.8	11.88													1.001	0.000	0
220	33.987	33.426		0.16	0.15	1.30	0.97		72	72		3.27	2.90	103	0.046	100	99	107.5	10.35													1.001	0.000	0
230	35.501	34.968		0.15	0.15	1.31	1.05		72	72		3.31	1.30	103	0.045	98	102	97.2	10.34													1.001	0.000	0
240	37.064	36.508		0.16	0.15	1.28	1.04		72	72		3.37	2.00	102	0.047	99	99	86.9	10.22													1.001	0.000	0
250	38.612	38.053		0.15	0.15	1.25	1.01		72	72		3.49	2.00	102	0.044	101	103	77.8	9.10													1.001	0.000	0
260	40.168	39.578		0.16	0.15	1.33	1.00		72	72		3.65	2.00	101	0.046	99	99	69.4	8.49													1.001	0.000	0
270	41.752	41.106		0.16	0.15	1.33	0.99		72	72		3.64	2.10	100	0.046	101	99	61.6	7.73													1.001	0.000	0
280	43.335	42.623		0.16	0.15	1.33	0.98		72	72		3.63	2.10	102	0.047	100	98	53.7	7.94													1.001	0.000	0
290	44.898	44.155		0.16	0.15	1.28	1.03		71	72		3.54	2.10	103	0.047	99	99	46.1	7.59													1.001	0.000	0
300	46.452	45.663		0.16	0.15	1.28	1.01		71	72		3.53	1.80	103	0.045	101	100	39.1	6.99													1.001	0.000	0
310	48.011	47.189		0.16	0.15	1.29	0.98		71	71		3.50	1.80	104	0.047	99	99	32.2	6.92													1.001	0.000	0
320	49.575	48.707		0.16	0.15	1.31	0.98		71	71		3.44	1.80	104	0.042	105	104	24.9	7.31													1.001	0.000	0
330	51.153	50.221		0.16	0.15	1.31	0.99		71	71		3.28	1.80	104	0.047	100	98	18.6	6.30													1.001	0.000	0
340	52.728	51.737		0.16	0.15	1.33	0.98		71	71		3.21	1.90	103	0.044	103	101	13.9	4.66													1.001	0.000	0
350	54.320	53.259		0.16	0.15	1.33	0.99		71	71		3.02	1.80	103	0.047	101	98	9.0	4.90													1.001	0.000	0
360	55.906	54.783		0.16	0.15	1.34	1.01		71	71		2.90	1.80	102	0.045	103	101	3.4	5.59													1.001	0.000	0
368	57.182	56.016		0.13	0.12	1.35	1.02		71	71		2.89	1.70	104	0.045	83	82	0.0	3.42													1.001	0.000	0

Elapsed Time	Particulate Sampling Data															Fuel Weight, lb		Flow, gpm		Temperature Data, oF														
	Gas Meter Cubic Feet (1)	Gas Meter Cubic Feet (2)	Gas Meter Cubic Feet (amb)	Sample Rate, cfm (1)	Sample Rate, cfm (2)	Orifice dH (1)	Orifice dH (2)	Orifice dH (amb)	Meter oF (1)	Meter oF (2)	Meter oF (amb)	Meter Vac. In. Hg. (1)	Meter Vac. In. Hg. (2)	Dilution Tunnel Temp.	Dilution Tunnel dP	Pro. Rate (%) (1)	Pro. Rate (%) (2)	Scale Reading	Weight Change	Load Side Liquid Flow Rate	Boiler Side Liquid Flow Rate (optional)	Thermopile ΔT	Boiler to Heat Exch. Temp.	Heat Exch to Boiler Temp.	Inlet Load Temp.	Outlet Load Temp.	Stack	Filter (1)	Filter (2)	Ambient	Stack Draft	Specific Heat of Inlet Water (BTU/lb-°F)	Mass Flow Rate of Inlet Water (lb/min)	Heat Output, Btu
	57.182	56.016	0.000			1.28	1.01	#DIV/0!	71	72	#DIV/0!			105	0.046					#DIV/0!	#DIV/0!	#DIV/0!	#DIV/0!	#DIV/0!	#DIV/0!	#DIV/0!		#DIV/0!	#DIV/0!		#DIV/0!			0
																														TOTAL:			0

TF_{avg}	0.000
TI_{avg}	0.000

Hydronic Heating Appliances - Test Method ASTM 2618
Results

Manufacturer: Central Boiler, Wood Master
Model: Edge 960, CleanFire 900
Tracking No.: 2430
Project No.: 0117WB041E
Run: 1
Test Date: December 9, 2020

Burn Rate	**23.82 kg/hr dry**
Average Tunnel Temperature	105 degrees F
Average Gas Velocity in Dilution Tunnel - vs	14.3 feet/second
Average Gas Flow Rate in Dilution Tunnel - Qsd	37648 dscf/hour
Average Delta p	0.046 inches H20
Average Delta H	1.28 inches H20
Total Time of Test	368 minutes

PARTICULATE EMISSIONS RESULTS

First Hour:	g/hr g/kg lb/mmBTU output
Complete Run:	g/hr g/kg lb/mmBTU output

	SAMPLE TRAIN 1	SAMPLE TRAIN 2	AMBIENT SAMPLE TRAIN
Total Sample Volume - Vm	57.18 cubic feet	56.02 cubic feet	cubic feet
Average Gas Meter Temperature	71 degrees F	72 degrees F	degrees F
Total Sample Volume (Standard Conditions) - Vmstd	58.6 dscf	56.4 dscf	dscf
Total Particulates - mn			
Particulate Concentration (dry-standard)			
Particulate Emissions			
Difference from Average			

AVERAGE

Total Sample Volume - Vm	56.60 cubic feet
Average Gas Meter Temperature	71 degrees F
Total Sample Volume (Standard Conditions) - Vmstd	57.5 dscf
Particulate Concentration (dry-standard)	grams/dscf
Particulate Emissions	grams
7.5% of the average particulate emissions	grams

ADDITIONAL ACCEPTANCE CRITERIA

Proportional Rate Variation >80%	**Acceptable**
90% of PR Values between 90-110%	**Acceptable**

SAMPLE TRAIN 1 - FIRST HOUR

Total Sample Volume - Vm	cubic feet
Average Gas Meter Temperature	degrees F
Total Sample Volume (Standard Conditions) - Vmstd	dscf
Total Particulates - mn	mg
Particulate Concentration (dry-standard)	grams/dscf
Particulate Emissions	grams
Burn Rate	(dry kg/hr)
Heat Output Rate	BTU/hr

Run 2

Hydronic Heating Appliances - Test Method ASTM 2618
Results

Manufacturer: Central Boiler - WoodMaster
Model: Edge 960 - CleanFire 900
Tracking No.: 2430
Project No.: 0117WB041E
Run: 2
Test Date: December 10, 2020

Burn Rate	**12.03 kg/hr dry**
Average Tunnel Temperature	90 degrees F
Average Gas Velocity in Dilution Tunnel - vs	14.6 feet/second
Average Gas Flow Rate in Dilution Tunnel - Qsd	39091 dscf/hour
Average Delta p	0.044 inches H20
Average Delta H	1.31 inches H20
Total Time of Test	728 minutes

PARTICULATE EMISSIONS RESULTS

First Hour:	**10.09** g/hr
	0.55 g/kg
	0.12 lb/mmBTU output
Complete Run:	**5.78** g/hr
	0.48 g/kg
	0.07 lb/mmBTU output

	SAMPLE TRAIN 1	SAMPLE TRAIN 2	AMBIENT SAMPLE TRAIN
Total Sample Volume - Vm	111.23 cubic feet	114.26 cubic feet	214.95 cubic feet
Average Gas Meter Temperature	80 degrees F	80 degrees F	68 degrees F
Total Sample Volume (Standard Conditions) - Vmstd	111.4 dscf	112.5 dscf	210.3 dscf
Total Particulates - mn	17.1 mg	16.2 mg	0.2 mg
Particulate Concentration (dry-standard)	0.00015 grams/dscf	0.00014 grams/dscf	0.000001 grams/dscf
Particulate Emissions	72.37 grams	67.87 grams	
Difference from Average	2.25 grams	2.25 grams	

Results Are Acceptable

AVERAGE

Total Sample Volume - Vm	112.74 cubic feet
Average Gas Meter Temperature	80 degrees F
Total Sample Volume (Standard Conditions) - Vmstd	111.9 dscf
Particulate Concentration (dry-standard)	0.00015 grams/dscf
Particulate Emissions	70.12 grams
7.5% of the average particulate emissions	5.26 grams

ADDITIONAL ACCEPTANCE CRITERIA

Boiler Water Return Temperature >120 °F	**Acceptable**
Proportional Rate Variation >80%	**Acceptable**
90% of PR Values between 90-110%	**Acceptable**
Train Precision < 7.5%	**4.82**

SAMPLE TRAIN 1 - FIRST HOUR

Total Sample Volume - Vm	9.54 cubic feet
Average Gas Meter Temperature	73 degrees F
Total Sample Volume (Standard Conditions) - Vmstd	9.65 dscf
Total Particulates - mn	2.5 mg
Particulate Concentration (dry-standard)	0.00026 grams/dscf
Particulate Emissions	10.09 grams
Burn Rate	18.32 (dry kg/hr)
Heat Output Rate	180499 BTU/hr

Hydronic Heating Appliances - Test Method ASTM 2618
Fuel Moisture

Manufacturer:	Central Boiler - WoodMaster
Model:	Edge 960 - CleanFire 900
Tracking No.:	2430
Project No.:	0117WB041E
Technician:	BD, TT
Run #:	2
Test Date:	December 10, 2020

Wet Weight (lb)	% Moisture				
11.2	21.3	25.1	20.5	20.2	19.4
11	18.4	18.9	20.7	19.7	18.6
10.5	20.7	20.6	26	24.2	19.6
10.8	19	21.9	20.1	19.3	19.4
11.2	22.8	21.8	19.2	19.1	21
10.7	24.2	24.8	22.4	23.5	18.4
11	24.2	18.2	24.9	22	18.9
11.6	25.1	18.2	18.9	19.5	19.1
11	27.3	27.5	23.6	19.1	19.4
11.1	19.1	19.8	19.1	24.2	23.1
11.5	24.6	23.4	20.6	22.5	24.6
10.7	22.1	22.9	27.2	18.1	25.7
9.6	21.3	19.6	19.1	22.3	18.2
10.8	24.8	22.3	24.2	21	18
9.4	21.6	19.2	18.1	18.2	19
10.3	20.9	23.7	18.3	20	18.1
10.4	27.8	25.9	19.3	22.3	22.6
10.3	23.1	21.4	18.6	19.1	26.2
10.1	18.7	23.1	19.6	19.2	21.9
9.4	20.2	20.1	18	19.4	20.2
10.7	22.7	22.3	19.1	19.2	18.9
10.6	18.3	22.1	20.6	18.2	19.2
11.2	26	22.1	19.7	19.3	21.4
11.5	19.7	19.1	19.6	19	18.5
11.5	22.5	22.8	19.1	19.1	18.9
10.7	22.3	21.9	19.7	22.4	20.7
11.6	19.4	18.7	22.9	19.7	20.9
11.2	21.8	22.4	24.2	23.6	20.6
11.5	21.8	21.2	21.0	19.5	18.5
11.1	21.3	22.1	26.3	19.5	19.6
10.2	18.6	19.1	18.2	20.7	21.8
11.1	19.1	19.8	19.1	20.2	22.3
10.8	23.6	24.2	18.9	24.8	22.3
11.2	24.8	25.6	18.2	18.4	19.6
11.5	26.4	26.9	22.1	21.6	19.2
11.2	23.5	28.0	23.6	18.9	19.1

Total Weight of Load (lb):	390.2
Total Moisture of Load (%):	21.2

Equipment Numbers:

Hydronic Heating Appliances - Test Method ASTM 2618
Test Data

Run: 2

Manufacturer: Central Boiler - WoodMaster
Model: Edge 960 - CleanFire 900
Tracking No.: 2430
Project No.: 0117WB041E
Test Date: December 10, 2020
Technician: BD, TT
Beginning Clock Time: 15:58
Recording Interval: 1 min.
Total Sampling Time: 728 min.

Velocity Traverse Data

	Pt.1	Pt.2	Pt.3	Pt.4	Pt.5	Pt.6	Pt.7	Pt.8	Pt.9	Pt.10	Pt.11	Pt.12	Center	
Initial dP	0.040	0.052	0.054	0.052	0.048	0.038	0.038	0.046	0.050	0.058	0.050	0.038	0.044	"H2O
Initial Temp.	71	71	71	71	71	71	71	71	71	71	71	71	71	oF

Air Velocity: Initial: <50 Final: <50
Scale Audit: Pre: 10.0 Post: 10.0
Pitot Tube Leak Test: Pre: 0 Post: 0
Flue Pipe Cleaned Prior to First Test in Series: Date: 12/8/2020

Induced Draft: 0
% Smoke Capture: 100

V_{strav} 14.34 ft/sec
V_{scent} 13.91 ft/sec
F_p 1.031

PM Control Module: 335, 336
Dilution Tunnel MW(dry): 29.00 lb/lb-mole
Dilution Tunnel MW(wet): 28.78 lb/lb-mole
Dilution Tunnel H2O: 2.00 percent
Dilution Tunnel Static: -0.498 "H2O
Pitot Tube Cp: 0.99

Meter Box Y Factor: (1) 1.013 (2) 0.997 (amb) 0.97

Barometric Pressure: Begin 30.09 Middle 30.14 End 30.18 Average 30.14 "Hg

Tunnel Velocity: 14.62 ft/sec.
Intial Tunnel Flow: 682.0 scfm
Average Tunnel Flow: 651.5 scfm
Tunnel Area: 0.785 ft2
Post-Test Leak Check (1): 0.000 cfm @ 14 in. Hg
Post-Test Leak Check (2): 0.000 cfm @ 9 in. Hg
Fuel Moisture (dry basis %): 21.2
Total Particulate (1): 17.1
Total Particulate (2): 16.2

Elapsed Time	Particulate Sampling Data																Fuel Weight, lb		Flow, gpm		Temperature Data, oF												
	Gas Meter Cubic Feet (1)	Gas Meter Cubic Feet (2)	Gas Meter Cubic Feet (amb)	Sample Rate, cfm (1)	Sample Rate, cfm (2)	Orifice dH (1)	Orifice dH (2)	Orifice dH (amb)	Meter oF (1)	Meter oF (2)	Meter oF (amb)	Meter Vac. In. Hg. (1)	Meter Vac. In. Hg. (2)	Dilution Tunnel Temp.	Dilution Tunnel dP	Pro. Rate (%) (1)	Pro. Rate (%) (2)	Scale Reading	Weight Change	Load Side Liquid Flow Rate	Boiler Side Liquid Flow Rate (optional)	Thermopile ΔT	Boiler to Heat Exch. Temp.	Heat Exch to Boiler Temp.	Inlet Load Temp.	Outlet Load Temp.	Stack	Filter (1)	Filter (2)	Ambient	Stack Draft	Specific Heat of Inlet Water (BTU/lb-°F)	Mass Flow Rate of Inlet Water (lb/min)	Heat Output, Btu
0	0.000	0.000	0			1.23	1.01	0.36	71	70	66	2.57	1.7	98	0.044			390.2		3.42	15.4277658	107.5	161.9	140.6	52.5	159.9	254	66	66	66	0.039			
1	0.155	0.141		0.16	0.14	1.3	1.06	0.36	71	71	66	2.61	1.7	79	0.046	100	89	388.4	1.80	3.59	15.4885302	107.4	162.2	139.4	52.4	159.9	220	66	65	66	0.032	1.001	29.950	3222
2	0.312	0.299		0.16	0.16	1.3	1.07	0.36	71	71	66	2.6	1.7	76	0.045	102	100	386.9	1.50	3.40	15.4516735	107.1	161.9	139.2	52.4	159.5	202	66	66	66	0.031	1.001	28.339	3039
3	0.470	0.459		0.16	0.16	1.29	1.06	0.36	71	71	66	2.62	1.7	89	0.044	105	104	386.0	0.91	3.55	15.3755693	106.5	161.3	138.8	52.4	158.9	216	66	66	66	0.050	1.001	29.618	3159
4	0.629	0.619		0.16	0.16	1.33	1.07	0.36	71	71	66	2.67	1.7	101	0.049	101	99	383.7	2.33	3.45	15.3647566	106.1	160.9	138.5	52.4	158.5	251	66	68	66	0.056	1.001	28.753	3054
5	0.789	0.776		0.16	0.16	1.33	1.07	0.36	71	71	66	2.67	1.7	105	0.043	109	104	381.9	1.80	3.53	15.5174313	106.4	161.1	138.7	52.4	158.8	270	66	69	66	0.058	1.001	29.441	3135
6	0.948	0.935		0.16	0.16	1.34	1.08	0.36	71	71	66	2.67	1.7	105	0.049	102	99	380.6	1.27	3.44	15.4631729	107.3	161.8	139.7	52.4	159.7	278	66	69	66	0.051	1.001	28.679	3082
7	1.107	1.095		0.16	0.16	1.33	1.07	0.36	71	71	66	2.66	1.7	101	0.043	108	106	379.9	0.70	3.27	15.4408245	108.1	162.4	140.7	52.5	160.5	271	66	70	66	0.047	1.001	27.241	2948
8	1.266	1.253		0.16	0.16	1.33	1.06	0.36	71	71	66	2.66	1.7	107	0.049	102	99	379.0	0.84	3.34	15.3783026	108.6	163.0	141.0	52.5	161.0	281	65	70	66	0.056	1.001	27.883	3031
9	1.425	1.412		0.16	0.16	1.33	1.06	0.36	71	71	65	2.66	1.7	105	0.041	111	108	377.0	2.04	3.40	15.3933401	109.2	163.7	141.7	52.5	161.7	278	65	71	65	0.056	1.001	28.378	3104
10	1.583	1.569		0.16	0.16	1.33	1.06	0.36	71	71	65	2.66	1.7	108	0.043	108	105	376.3	0.69	3.38	15.4672022	109.7	164.0	142.2	52.5	162.2	285	65	71	65	0.054	1.001	28.214	3098
11	1.742	1.726		0.16	0.16	1.33	1.05	0.36	71	71	65	2.65	1.7	108	0.043	109	105	374.6	1.67	3.44	15.4520493	110.2	164.7	142.4	52.5	162.7	285	64	72	65	0.049	1.001	28.695	3165
12	1.901	1.884		0.16	0.16	1.32	1.04	0.36	71	72	65	2.66	1.7	109	0.047	104	101	373.9	0.74	3.42	15.3932905	110.6	165.1	142.8	52.5	163.1	287	64	72	65	0.056	1.001	28.540	3161
13	2.060	2.040		0.16	0.16	1.33	1.04	0.36	71	72	65	2.66	1.7	110	0.042	110	105	372.1	1.76	3.34	15.4546413	111.2	165.8	143.3	52.5	163.7	290	64	72	65	0.051	1.001	27.888	3104
14	2.219	2.197		0.16	0.16	1.32	1.02	0.36	71	72	64	2.68	1.7	110	0.047	104	100	370.5	1.68	3.15	15.490303	111.9	166.3	144.7	52.5	164.4	291	64	72	64	0.056	1.001	26.280	2944
15	2.377	2.352		0.16	0.16	1.33	1.01	0.36	72	72	64	2.67	1.7	111	0.040	112	107	369.8	0.69	3.35	15.4796734	112.5	167.0	144.5	52.6	165.1	292	63	73	64	0.055	1.001	27.919	3144
16	2.535	2.509		0.16	0.16	1.32	1.06	0.36	72	72	64	2.69	1.8	111	0.045	106	102	368.3	1.45	3.29	15.4517975	113.1	167.8	145.0	52.6	165.7	292	63	73	64	0.054	1.001	27.396	3103
17	2.693	2.666		0.16	0.16	1.31	1.06	0.36	72	72	64	2.67	1.8	111	0.046	105	101	367.5	0.85	3.38	15.3953123	114.2	168.6	146.5	52.6	166.8	293	63	73	64	0.056	1.001	28.198	3225
18	2.851	2.824		0.16	0.16	1.32	1.03	0.36	72	72	63	2.69	1.9	112	0.048	103	100	365.7	1.72	3.12	15.4898033	114.4	168.9	146.9	52.6	167.0	294	63	73	63	0.052	1.001	26.013	2980
19	3.008	2.979		0.16	0.16	1.31	1.04	0.36	72	72	63	2.7	1.8	111	0.041	110	106	365.0	0.78	3.07	15.4795313	115.3	169.6	148.2	52.6	167.9	295	63	73	63	0.057	1.001	25.640	2959
20	3.167	3.137		0.16	0.16	1.31	1.04	0.36	72	72	63	2.71	1.8	112	0.045	107	103	364.1	0.90	3.11	15.4411879	116.1	170.4	148.8	52.6	168.7	296	63	73	63	0.054	1.001	25.971	3020
21	3.324	3.293		0.16	0.16	1.31	1.04	0.36	72	72	63	2.7	1.8	112	0.042	109	106	362.1	1.98	3.04	15.46103	117.0	171.1	150.2	52.6	169.6	296	62	74	63	0.055	1.001	25.327	2967
22	3.482	3.450		0.16	0.16	1.3	1.03	0.36	72	72	63	2.7	1.8	112	0.039	114	110	361.3	0.84	2.69	15.4027147	117.6	171.7	150.8	52.7	170.2	297	63	74	63	0.056	1.001	22.403	2637
23	3.640	3.606		0.16	0.16	1.32	1.01	0.36	72	73	63	2.74	1.9	112	0.043	108	104	360.1	1.15	2.73	15.3558302	118.9	172.7	153.1	52.7	171.6	298	62	74	63	0.057	1.001	22.735	2707
24	3.799	3.763		0.16	0.16	1.33	1.06	0.36	72	73	63	2.73	1.9	113	0.046	106	101	359.1	1.02	2.76	15.423008	119.5	173.3	153.6	52.7	172.2	298	62	74	63	0.055	1.001	23.053	2758
25	3.958	3.921		0.16	0.16	1.33	1.05	0.36	72	73	63	2.75	1.9	114	0.041	112	108	357.7	1.43	2.82	15.4026814	120.1	173.9	154.5	52.7	172.8	300	62	74	63	0.056	1.001	23.535	2829
26	4.116	4.079		0.16	0.16	1.33	1.05	0.36	72	73	63	2.73	1.9	113	0.043	109	106	356.4	1.23	3.02	15.507597	120.6	174.8	153.5	52.8	173.4	299	62	74	63	0.056	1.001	25.150	3037
27	4.276	4.237		0.16	0.16	1.33	1.05	0.36	72	73	63	2.73	1.9	113	0.046	106	102	355.0	1.44	2.98	15.4696703	121.0	175.2	153.8	52.7	173.7	300	63	74	63	0.055	1.001	24.812	3006
28	4.435	4.394		0.16	0.16	1.33	1.06	0.36	72	73	64	2.74	1.9	114	0.046	106	101	354.3	0.67	2.92	15.4763966	121.8	175.9	155.1	52.7	174.5	300	63	74	64	0.057	1.001	24.315	2966
29	4.594	4.553		0.16	0.16	1.32	1.06	0.36	73	73	64	2.75	1.9	115	0.042	110	108	352.8	1.53	2.84	15.3562155	122.4	176.6	154.9	52.8	175.1	301	64	75	64	0.051	1.001	23.646	2897
30	4.752	4.710		0.16	0.16	1.32	1.05	0.36	73	73	65	2.76	1.9	116	0.043	109	105	351.6	1.24	2.70	15.5462627	123.2	177.2	156.7	52.8	176.0	301	64	75	65	0.054	1.001	22.502	2776
31	4.910	4.867		0.16	0.16	1.31	1.04	0.36	73	73	66	2.78	2	117	0.046	105	102	350.4	1.16	2.58	15.4609442	124.1	178.0	158.2	52.9	177.0	302	65	75	66	0.053	1.001	21.528	2675
32	5.068	5.025		0.16	0.16	1.31	1.03	0.36	73	73	67	2.79	2	118	0.044	108	105	349.1	1.34	2.66	15.4409866	124.8	178.8	159.0	53.0	177.8	303	65	75	67	0.052	1.001	22.144	2767
33	5.226	5.182		0.16	0.16	1.31	1.05	0.36	73	73	67	2.78	2	119	0.046	105	102	348.6	0.50	2.64	15.3560266	125.4	179.6	159.7	53.1	178.6	303	66	76	67	0.050	1.001	22.005	2763
34	5.384	5.340		0.16	0.16	1.31	1.04	0.36	73	73	67	2.8	2	118	0.041	111	109	347.0	1.54	2.64	15.4313488	125.9	180.1	160.1	53.2	179.1	300	66	76	67	0.050	1.001	22.011	2775
35	5.543	5.496		0.16	0.16	1.32	1.05	0.36	73	73	68	2.82	2	121	0.042	111	106	345.5	1.52	2.57	15.4518175	126.7	180.9	160.9	53.3	179.9	302	67	76	68	0.049	1.001	21.390	2713
36	5.701	5.655		0.16	0.16	1.32	1.04	0.36	73	74	69	2.81	2	120	0.043	109	107	344.8	0.72	2.61	15.3262777	127.2	181.5	161.4	53.4	180.5	300	67	77	69	0.047	1.001	21.747	2769
37	5.860	5.811		0.16	0.16	1.31	1.03	0.36	74	74	69	2.83	2	121	0.045	107	102	343.2	1.61	2.62	15.4212952	127.8	182.2	162.0	53.4	181.2	302	67	77	69	0.050	1.001	21.848	2796
38	6.018	5.968		0.16	0.16	1.32	1.02	0.36	74	74	69	2.81	2	122	0.044	108	104	342.7	0.44	2.69	15.4219151	128.4	182.8	162.5	53.4	181.8	304	68	77	69	0.054	1.001	22.448	2886
39	6.177	6.124		0.16	0.16	1.32	1.04	0.36	74	74	69	2.81	2	101	0.044	106	102	342.2	0.56	2.69	15.4194412	129.1	183.5	163.2	53.4	182.5	275	68	76	69	0.039	1.001	22.454	2902
40	6.335	6.282		0.16	0.16	1.32	1.04	0.36	74	74	70	2.81	2	95	0.046	103	100	341.2	0.93	2.56	15.4518509	129.5	183.8	164.1	53.4	182.9	253	68	75	70	0.038	1.001	21.318	2764
41	6.495	6.439		0.16	0.16	1.32	1.03	0.36	74	75	70	2.8	2	92	0.046	104	99	341.8	-0.54	2.54	15.4228096	129.5	183.8	164.3	53.5	183.0	241	69	75	70	0.037	1.001	21.161	2745
42	6.654	6.597		0.16	0.16	1.32	1.04	0.36	74	75	71	2.78	2	91	0.045	104	101	341.4	0.38	2.54	15.467536	129.3	183.6	164.2	53.5	182.8	232	69	74	71	0.036	1.001	21.166	2740
43	6.814	6.755		0.16	0.16	1.32	1.05	0.36	75	75	71	2.78	1.9	90	0.047	102	98	341.7	-0.31	2.50	15.453825	129.1	183.5	164.1	53.6	182.7	227	69	73	71	0.035	1.001	20.834	2694
44	6.974	6.913		0.16	0.16	1.32	1.05	0.36	75	75	72	2.78	1.9	90	0.045	105	101	341.6	0.06	2.60	15.402832	129.1	183.5	164.1	53.6	182.7	223	69	73	72	0.035	1.001	21.638	2797
45	7.133	7.071		0.16	0.16	1.32	1.05	0.36	75	75	72	2.78	1.9	90	0.041	109	105	341.5	0.15	2.54	15.4222441	128.7	183.1	163.7	53.6	182.3	219	70	72	72	0.034	1.001	21.150	2726
46	7.293	7.229		0.16	0.16	1.32	1.05	0.36	75	76	72	2.78	1.9	88	0.044	106	101	341.3	0.22	2.56	15.4796324	128.4	182.8	163.6	53.6	182.0	216	70	72	72	0.034	1.001	21.314	2740
47	7.453	7.388		0.16	0.16	1.32	1.05	0.36	76	76	72	2.77	1.9	88	0.044	105	102	341.8	-0.59	2.54	15.428441	128.0	182.5	163.2	53.6	181.7	213	70	71	72	0.033	1.001	21.150	2711
48	7.613	7.547		0.16	0.16	1.32	1.05	0.36	76	76	73	2.78	1.9	88	0.044	105	102	341.7	0.18	2.54	15.4744654	127.8	182.2	163.0	53.6	181.4	210	70	71	73	0.032	1.001	21.155	2707
49	7.772	7.706		0.16	0.16	1.33	1.05	0.36	76	76	73	2.77	1.9	89	0.042	107	105	342.1	-0.44	2.46	15.3464422	127.3	181.7	162.6	53.7	181.0	210	70	70	73	0.030	1.001	20.503	2614

Elapsed Time	Particulate Sampling Data																	Fuel Weight, lb		Flow, gpm		Temperature Data, oF													
	Gas Meter Cubic Feet (1)	Gas Meter Cubic Feet (2)	Gas Meter Cubic Feet (amb)	Sample Rate, cfm (1)	Sample Rate, cfm (2)	Orifice dH (1)	Orifice dH (2)	Orifice dH (amb)	Meter oF (1)	Meter oF (2)	Meter oF (amb)	Meter Vac. In. Hg. (1)	Meter Vac. In. Hg. (2)	Dilution Tunnel Temp.	Dilution Tunnel dP	Pro. Rate (%) (1)	Pro. Rate (%) (2)	Scale Reading	Weight Change	Load Side Liquid Flow Rate	Boiler Side Liquid Flow Rate (optional)	Thermopile ΔT	Boiler to Heat Exch. Temp.	Heat Exch to Boiler Temp.	Inlet Load Temp.	Outlet Load Temp.	Stack	Filter (1)	Filter (2)	Ambient	Stack Draft	Specific Heat of Inlet Water (BTU/lb-°F)	Mass Flow Rate of Inlet Water (lb/min)	Heat Output, Btu
50	7.933	7.864		0.16	0.16	1.33	1.06	0.36	76	77	74	2.77	1.9	88	0.047	103	98	342.0	0.06	2.48	15.38482	127.0	181.5	162.3	53.7	180.7	210	71	70	74	0.030	1.001	20.658	2627
51	8.093	8.024		0.16	0.16	1.32	1.05	0.36	77	77	74	2.76	1.9	88	0.046	103	100	342.2	-0.12	2.55	15.4320154	126.6	181.1	162.1	53.7	180.3	208	71	70	74	0.029	1.001	21.303	2701
52	8.254	8.183		0.16	0.16	1.33	1.06	0.36	77	77	73	2.77	1.9	87	0.041	110	105	340.8	1.33	2.52	15.4318352	126.2	180.7	161.8	53.7	180.0	206	71	69	73	0.028	1.001	20.986	2652
53	8.414	8.343		0.16	0.16	1.34	1.07	0.36	77	77	73	2.76	1.9	86	0.045	104	101	341.7	-0.88	2.50	15.5369177	125.9	180.4	161.5	53.7	179.7	204	71	69	73	0.028	1.001	20.826	2626
54	8.575	8.504		0.16	0.16	1.33	1.07	0.36	77	78	73	2.76	1.9	86	0.045	105	102	341.7	0.00	2.48	15.5306749	125.6	179.9	161.1	53.6	179.2	201	71	69	73	0.027	1.001	20.673	2599
55	8.736	8.664		0.16	0.16	1.34	1.08	0.36	77	78	73	2.75	1.9	84	0.046	103	100	341.6	0.14	2.50	15.4236774	125.3	179.7	160.7	53.6	178.9	198	71	69	73	0.028	1.001	20.838	2614
56	8.897	8.825		0.16	0.16	1.34	1.07	0.36	78	78	73	2.76	1.8	84	0.043	107	104	341.4	0.18	2.60	15.4411764	125.1	179.4	160.6	53.5	178.6	196	71	69	73	0.027	1.001	21.649	2711
57	9.059	8.986		0.16	0.16	1.34	1.08	0.36	78	78	73	2.76	1.8	82	0.048	101	98	341.3	0.11	2.56	15.4030485	124.5	178.7	160.0	53.5	178.0	193	71	69	73	0.027	1.001	21.333	2660
58	9.220	9.147		0.16	0.16	1.34	1.09	0.36	78	78	73	2.75	1.8	82	0.043	106	104	340.9	0.36	2.52	15.4232788	124.2	178.3	159.7	53.4	177.6	191	71	69	73	0.027	1.001	21.001	2611
59	9.382	9.308		0.16	0.16	1.35	1.09	0.36	78	79	73	2.76	1.8	81	0.042	108	105	341.5	-0.60	2.52	15.4228277	123.8	177.9	159.3	53.4	177.2	188	71	69	73	0.026	1.001	21.015	2605
60	9.544	9.470		0.16	0.16	1.35	1.09	0.36	78	79	73	2.76	1.8	80	0.044	106	103	341.2	0.30	2.56	15.4614401	123.4	177.4	158.9	53.3	176.7	186	70	69	73	0.026	1.001	21.324	2634
61	9.708	9.633		0.16	0.16	1.33	1.10	0.36	79	79	73	2.81	1.8	80	0.047	103	100	341.3	-0.04	2.50	15.4415684	123.0	177.1	158.5	53.3	176.3	183	66	69	73	0.026	1.001	20.873	2570
62	9.868	9.793		0.16	0.16	1.33	1.07	0.36	79	79	73	2.81	1.7	79	0.046	102	99	341.8	-0.54	2.54	15.4031076	122.6	176.6	158.0	53.3	175.9	181	66	69	73	0.025	1.001	21.210	2603
63	10.029	9.954		0.16	0.16	1.34	1.08	0.36	79	79	72	2.81	1.7	79	0.045	103	101	341.5	0.32	2.58	15.537343	122.2	176.2	157.5	53.2	175.4	178	66	69	72	0.025	1.001	21.510	2631
64	10.191	10.116		0.16	0.16	1.34	1.08	0.36	79	79	72	2.79	1.7	78	0.042	108	105	341.8	-0.32	2.54	15.4795332	121.8	175.8	157.2	53.2	175.0	176	66	70	72	0.025	1.001	21.186	2583
65	10.352	10.277		0.16	0.16	1.34	1.08	0.36	79	80	72	2.79	1.7	78	0.046	102	99	341.7	0.18	2.62	15.4470129	121.3	175.2	156.7	53.2	174.5	174	67	70	72	0.024	1.001	21.886	2657
66	10.514	10.438		0.16	0.16	1.35	1.10	0.36	79	80	72	2.78	1.7	78	0.045	104	101	341.6	0.03	2.52	15.3364677	120.8	174.8	156.4	53.2	174.0	172	67	70	72	0.024	1.001	21.022	2543
67	10.676	10.599		0.16	0.16	1.35	1.05	0.36	79	80	72	2.77	1.6	78	0.044	105	102	342.1	-0.52	2.73	15.4603024	120.5	174.5	156.0	53.2	173.7	170	67	70	72	0.024	1.001	22.799	2751
68	10.839	10.759		0.16	0.16	1.35	1.05	0.36	80	80	71	2.76	1.6	77	0.045	104	100	341.9	0.20	2.58	15.4904995	119.9	173.8	155.0	53.1	173.0	168	67	70	71	0.024	1.001	21.520	2583
69	11.001	10.917		0.16	0.16	1.35	1.06	0.36	80	80	71	2.78	1.6	77	0.047	102	96	341.9	0.03	2.71	15.4796438	119.4	173.4	154.4	53.1	172.5	166	67	70	71	0.023	1.001	22.588	2701
70	11.163	11.077		0.16	0.16	1.35	1.06	0.36	80	80	71	2.77	1.6	77	0.047	102	98	342.0	-0.09	2.68	15.3942442	118.9	172.9	153.8	53.0	172.0	164	67	70	71	0.022	1.001	22.327	2659
71	11.325	11.237		0.16	0.16	1.35	1.06	0.36	80	80	71	2.76	1.6	77	0.046	103	99	342.1	-0.09	2.70	15.3647203	118.4	172.4	153.3	53.0	171.5	162	67	70	71	0.022	1.001	22.491	2666
72	11.488	11.397		0.16	0.16	1.33	1.06	0.36	80	80	71	2.74	1.6	76	0.046	103	99	342.0	0.07	2.64	15.4615955	117.9	171.8	152.8	53.0	170.9	159	67	69	71	0.022	1.001	22.004	2597
73	11.649	11.557		0.16	0.16	1.33	1.07	0.36	80	81	71	2.75	1.6	76	0.044	104	101	342.3	-0.27	2.72	15.479558	117.4	171.3	152.4	53.0	170.4	158	67	69	71	0.022	1.001	22.649	2662
74	11.810	11.718		0.16	0.16	1.33	1.08	0.36	80	81	71	2.74	1.6	76	0.043	105	102	342.4	-0.11	2.66	15.4901228	116.9	170.9	152.0	53.0	170.0	157	67	69	71	0.021	1.001	22.165	2595
75	11.972	11.879		0.16	0.16	1.33	1.07	0.36	80	81	71	2.75	1.6	76	0.044	105	101	342.1	0.31	2.76	15.423173	116.5	170.4	151.3	53.0	169.5	155	67	69	71	0.021	1.001	22.976	2679
76	12.133	12.040		0.16	0.16	1.34	1.08	0.36	80	81	71	2.75	1.6	76	0.044	104	101	342.2	-0.14	2.77	15.4795971	115.8	169.8	150.6	53.0	168.8	153	68	69	71	0.021	1.001	23.137	2683
77	12.295	12.202		0.16	0.16	1.33	1.07	0.36	80	81	70	2.75	1.60	76	0.044	105	102	342.0	0.19	2.79	15.4413271	115.3	169.3	150.2	53.0	168.3	152	68	69	70	0.021	1.001	23.297	2691
78	12.456	12.362		0.16	0.16	1.34	1.08	0.36	80	81	70	2.75	1.60	75	0.042	107	103	342.3	-0.26	2.81	15.4795856	114.9	168.8	149.8	52.9	167.8	150	68	69	70	0.020	1.001	23.464	2699
79	12.618	12.523		0.16	0.16	1.33	1.08	0.36	80	81	70	2.74	1.60	75	0.045	104	100	342.2	0.15	2.74	15.4414358	114.4	168.4	149.2	52.9	167.3	149	68	69	70	0.020	1.001	22.816	2613
80	12.779	12.684		0.16	0.16	1.34	1.08	0.36	80	81	70	2.74	1.60	75	0.045	103	100	342.2	-0.08	2.89	15.3849277	113.8	167.9	148.6	52.9	166.8	147	68	69	70	0.020	1.001	24.113	2748
81	12.941	12.846		0.16	0.16	1.34	1.08	0.36	80	81	70	2.75	1.60	75	0.046	102	100	342.3	-0.06	2.81	15.441411	113.3	167.3	148.2	52.9	166.3	146	68	69	70	0.019	1.001	23.456	2662
82	13.103	13.006		0.16	0.16	1.34	1.08	0.36	80	81	70	2.74	1.60	75	0.048	100	96	342.1	0.14	2.91	15.4521694	112.7	166.9	147.3	52.9	165.7	144	68	69	70	0.019	1.001	24.289	2742
83	13.264	13.168		0.16	0.16	1.33	1.08	0.36	81	81	70	2.76	1.50	75	0.044	104	102	342.6	-0.44	2.76	15.5063639	112.2	166.3	147.4	52.9	165.1	143	68	69	70	0.019	1.001	22.994	2584
84	13.426	13.330		0.16	0.16	1.34	1.08	0.36	81	81	70	2.74	1.60	75	0.046	102	100	342.4	0.24	2.96	15.4199686	111.4	165.7	145.8	52.9	164.4	142	68	69	70	0.019	1.001	24.642	2750
85	13.588	13.491		0.16	0.16	1.34	1.08	0.36	81	81	70	2.76	1.50	75	0.048	100	97	342.5	-0.11	3.02	15.4900122	110.9	165.1	145.2	52.8	163.7	141	68	69	70	0.019	1.001	25.144	2792
86	13.749	13.652		0.16	0.16	1.33	1.08	0.36	81	81	70	2.75	1.60	75	0.048	99	97	342.7	-0.28	3.05	15.4614735	110.4	164.6	144.8	52.8	163.2	140	68	69	70	0.018	1.001	25.398	2807
87	13.910	13.812		0.16	0.16	1.32	1.06	0.36	81	81	70	2.73	1.50	75	0.046	102	98	342.2	0.56	3.08	15.5177088	109.8	164.0	144.4	52.8	162.6	138	68	69	70	0.018	1.001	25.723	2828
88	14.071	13.973		0.16	0.16	1.32	1.06	0.36	81	81	70	2.74	1.50	75	0.047	101	98	342.1	0.06	3.05	15.5951624	109.2	163.4	143.8	52.8	162.0	137	68	69	70	0.018	1.001	25.405	2777
89	14.232	14.132		0.16	0.16	1.32	1.06	0.36	81	81	70	2.74	1.50	74	0.047	100	97	342.4	-0.32	3.03	15.4320679	108.8	163.0	143.5	52.8	161.7	136	68	69	70	0.018	1.001	25.244	2751
90	14.392	14.292		0.16	0.16	1.32	1.06	0.36	81	81	69	2.73	1.50	74	0.045	102	99	342.2	0.28	2.97	15.4615793	108.3	162.5	143.0	52.8	161.0	135	68	69	69	0.018	1.001	24.758	2683
91	14.553	14.453		0.16	0.16	1.32	1.06	0.36	81	81	69	2.75	1.50	77	0.044	104	101	342.3	-0.14	3.03	15.5371494	107.7	161.9	142.5	52.8	160.5	143	68	69	69	0.036	1.001	25.240	2721
92	14.713	14.611		0.16	0.16	1.31	1.05	0.36	81	81	69	2.75	1.60	90	0.045	104	100	340.9	1.37	3.01	15.4797182	107.1	161.4	142.1	52.8	160.0	192	69	70	69	0.039	1.001	25.082	2691
93	14.873	14.770		0.16	0.16	1.32	1.05	0.36	81	81	69	2.76	1.60	95	0.044	105	102	340.0	0.98	3.05	15.4767704	106.7	161.0	141.7	52.8	159.5	225	70	70	69	0.039	1.001	25.405	2715
94	15.033	14.929		0.16	0.16	1.32	1.05	0.36	81	81	69	2.77	1.60	101	0.044	106	102	338.4	1.56	2.93	15.4673328	106.7	161.0	141.7	52.7	159.5	250	70	70	69	0.048	1.001	24.437	2611
95	15.193	15.087		0.16	0.16	1.32	1.05	0.36	81	81	69	2.77	1.60	104	0.045	105	101	337.0	1.42	2.97	15.5045767	107.0	161.3	142.0	52.7	159.8	264	71	71	69	0.051	1.001	24.754	2653
96	15.353	15.246		0.16	0.16	1.32	1.05	0.36	81	81	69	2.78	1.60	107	0.041	110	107	335.6	1.38	2.99	15.4793959	107.1	161.4	142.0	52.8	159.9	273	72	71	69	0.050	1.001	24.916	2672
97	15.514	15.403		0.16	0.16	1.31	1.04	0.36	81	81	69	2.80	1.60	109	0.048	103	97	334.8	0.84	3.09	15.3935032	107.2	161.5	141.9	52.8	159.9	282	73	72	69	0.050	1.001	25.727	2761
98	15.673	15.561		0.16	0.16	1.31	1.04	0.36	81	81	69	2.78	1.60	109	0.043	107	104	333.5	1.30	3.09	15.5034904	107.6	162.1	142.2	52.7	160.4	285	73	72	69	0.053	1.001	25.730	2773
99	15.833	15.718		0.16	0.16	1.31	1.03	0.36	81	81	69	2.79	1.60	111	0.044	107	102	332.3	1.12	3.01	15.4544182	108.2	162.6	142.5	52.7	160.9	288	74	73	69	0.053	1.001	25.081	2716
100	15.992	15.875		0.16	0.16	1.31	1.03	0.36	81	81	69	2.80	1.60	109	0.047	102	98	330.5	1.87	3.15	15.4519596	108.9	163.2	143.3	52.7	161.6	286	74	73	69	0.050	1.001	26.267	2863
101	16.151	16.032		0.16	0.16	1.31	1.03	0.36	81	81	69	2.80	1.60	112	0.043	107	103	329.9	0.59	3.03	15.4994459	109.4	163.7	143.7	52.7	162.1	291	75	74	69	0.054	1.001	25.242	2764
102	16.310	16.189		0.16	0.16	1.30	1.03	0.36	81	81	69	2.80	1.60	111	0.048	101	98	328.4	1.46	3.03	15.4613705	109.7	164.1	143.9	52.7	162.4	290	76	74	69	0.049	1.001	25.244	2772
103	16.469	16.346		0.16	0.16	1.31	1.02	0.36	81	81	69	2.82	1.60	111	0.043	107	103	326.7	1.74	2.99	15.4799862	110.5	164.8	144.9	52.7	163.2	290	76	74	69	0.054	1.001	24.917	2755
104	16.628	16.502		0.16	0.16	1.31	1.02	0.36	81	81	69	2.82	1.60	111	0.046	104	99	325.5	1.16	2.91	15.4898977	111.2	165.6	145.4	52.8	164.0	291	77	75	69	0.052	1.001	24.267	2702
105	16.787	16.659		0.16	0.16	1.32	1.05	0.36	81	81	69	2.86	1.70	113	0.044	106	102	323.9	1.61	3.07	15.4136066	111.4	166.0	144.9	52.7	164.2	295	77	75	69	0.050	1.001	25.559	2851
106	16.947	16.816		0.16	0.16	1.32	1.05	0.36	81	81	69	2.85	1.70	113	0.044	107	102	323.1	0.86	3.20	15.4552135	112.2	166.8	145.5	52.7	164.9	294	78	76	69	0.054	1.001	26.690	2997
107	17.107	16.975		0.16	0.16	1.32	1.05	0.36	81	81	69	2.85	1.70	114	0.044	107	103	321.6	1.51	3.01	15.4411898	112.9	167.4	146.5	52.7	165.6	298	78	76	69	0.056	1.001	25.078	2834
108	17.267	17.132		0.16	0.16	1.31	1.04	0.36	81	81	69	2.87	1.70	113	0.042	109	105	319.7	1.90	3.09	15.4856682	113.3	167.8	146.8	52.7	166.1	297	79	76	69	0.051	1.001	25.726	2919
109	17.427	17.290		0.16	0.16	1.31	1.04	0.36	81	81	69	2.88	1.70	113	0.046	104	100	318.0	1.68	3.05	15.5081921	114.4	168.8	148.5	52.8	167.2	298	79	77	69	0.056	1.001	25.396	2909
110	17.586	17.448		0.16	0.16	1.32	1.04	0.36	81	81	69	2.87	1.70	113	0.044	106	103	317.6	0.40	3.07	15.4315605	115.0	169.5	148.2	52.8	167.8	297	79	77	69	0.052	1.001	25.570	2944
111	17.745	17.605		0.16	0.16	1.30	1.03	0.36	81	81	69	2.88	1.70	114	0.045	105	101	316.1	1.42	3.10	15.441411	115.6	170.2	148.7	52.8	168.4	299	79	77	69	0.052	1.001	25.884	2997

Elapsed Time	Particulate Sampling Data																	Fuel Weight, lb		Flow, gpm		Temperature Data, oF														
	Gas Meter Cubic Feet (1)	Gas Meter Cubic Feet (2)	Gas Meter Cubic Feet (amb)	Sample Rate, cfm (1)	Sample Rate, cfm (2)	Orifice dH (1)	Orifice dH (2)	Orifice dH (amb)	Meter oF (1)	Meter oF (2)	Meter oF (amb)	Meter Vac. In. Hg. (1)	Meter Vac. In. Hg. (2)	Dilution Tunnel Temp.	Dilution Tunnel dP	Pro. Rate (%) (1)	Pro. Rate (%) (2)	Scale Reading	Weight Change	Load Side Liquid Flow Rate	Boiler Side Liquid Flow Rate (optional)	Thermopile ΔT	Boiler to Heat Exch. Temp.	Heat Exch to Boiler Temp.	Inlet Load Temp.	Outlet Load Temp.	Stack	Filter (1)	Filter (2)	Ambient	Stack Draft	Specific Heat of Inlet Water (BTU/lb-°F)	Mass Flow Rate of Inlet Water (lb/min)	Heat Output, Btu
112	17.904	17.762		0.16	0.16	1.31	1.03	0.36	81	81	69	2.89	1.70	113	0.044	106	102	315.2	0.99	3.07	15.4995317	116.6	171.0	149.9	52.8	169.4	298	79	77	69	0.055	1.001	25.559	2984
113	18.063	17.918		0.16	0.16	1.31	1.03	0.36	81	81	69	2.89	1.80	112	0.045	105	100	314.2	0.94	2.70	15.4699173	118.0	171.8	152.6	52.7	170.7	296	79	77	69	0.050	1.001	22.489	2656
114	18.222	18.076		0.16	0.16	1.30	1.02	0.36	81	81	69	2.90	1.80	114	0.046	104	101	312.2	2.03	2.76	15.4332638	118.2	172.1	152.4	52.8	171.0	300	80	78	69	0.053	1.001	22.997	2721
115	18.381	18.231		0.16	0.16	1.30	1.02	0.36	81	81	69	2.89	1.80	113	0.042	109	103	311.3	0.90	2.87	15.5172462	119.1	173.1	153.0	52.8	171.8	299	80	78	69	0.052	1.001	23.930	2852
116	18.540	18.388		0.16	0.16	1.30	1.02	0.36	81	81	69	2.90	1.80	114	0.041	110	106	309.4	1.89	2.74	15.3753433	119.6	173.7	153.5	52.8	172.5	300	80	78	69	0.052	1.001	22.807	2732
117	18.699	18.543		0.16	0.15	1.30	1.01	0.36	81	81	69	2.92	1.80	115	0.045	105	100	308.2	1.21	2.87	15.3934326	119.9	174.0	153.6	52.8	172.7	303	80	78	69	0.055	1.001	23.907	2870
118	18.857	18.699		0.16	0.16	1.29	1.01	0.36	81	81	68	2.94	1.80	115	0.046	103	99	307.0	1.23	2.80	15.4230757	120.8	175.0	154.3	52.8	173.6	303	80	79	68	0.054	1.001	23.344	2823
119	19.015	18.856		0.16	0.16	1.28	1.08	0.36	81	81	69	2.96	1.90	114	0.044	106	102	305.0	1.94	2.82	15.4899626	121.7	175.9	155.0	52.8	174.5	300	80	79	69	0.056	1.001	23.548	2869
120	19.173	19.016		0.16	0.16	1.29	1.08	0.36	81	81	69	2.95	1.90	115	0.042	108	107	303.7	1.28	2.78	15.5175734	122.5	176.6	155.7	52.8	175.2	302	81	79	69	0.055	1.001	23.141	2837
121	19.331	19.176		0.16	0.16	1.29	1.06	0.36	81	81	69	2.92	1.90	117	0.042	108	107	302.6	1.17	2.80	15.4995747	123.1	177.2	156.2	52.7	175.9	305	81	79	69	0.057	1.001	23.313	2874
122	19.489	19.333		0.16	0.16	1.29	1.03	0.36	81	81	69	2.94	2.00	116	0.045	105	101	301.6	1.02	2.83	15.441329	123.8	177.9	156.7	52.7	176.5	306	81	79	69	0.058	1.001	23.627	2929
123	19.647	19.492		0.16	0.16	1.29	1.03	0.36	81	81	69	2.95	1.90	116	0.041	110	107	299.4	2.12	2.83	15.3753052	124.6	178.7	157.3	52.7	177.3	306	81	79	69	0.055	1.001	23.625	2947
124	19.806	19.649		0.16	0.16	1.29	1.05	0.36	81	81	69	2.94	1.90	115	0.046	104	100	298.7	0.73	2.52	15.4614878	125.6	179.5	159.3	52.7	178.4	305	81	79	69	0.058	1.001	21.038	2646
125	19.964	19.807		0.16	0.16	1.28	1.04	0.36	81	81	69	2.94	1.90	118	0.046	104	101	297.0	1.68	2.50	15.375351	126.6	180.3	161.3	52.8	179.4	309	82	80	69	0.058	1.001	20.877	2647
126	20.121	19.963		0.16	0.16	1.28	0.99	0.36	81	81	69	2.95	2.00	116	0.044	105	102	296.6	0.37	2.64	15.4517565	126.9	180.8	160.5	52.9	179.7	308	82	80	69	0.058	1.001	22.002	2795
127	20.279	20.119		0.16	0.16	1.28	1.03	0.36	81	81	69	2.96	1.90	118	0.041	110	106	294.1	2.58	2.70	15.4170818	127.6	181.6	161.0	52.9	180.5	311	82	80	69	0.055	1.001	22.496	2874
128	20.436	20.276		0.16	0.16	1.28	1.01	0.36	81	81	69	2.97	2.00	118	0.043	107	104	293.0	1.11	2.66	15.4231281	128.5	182.5	161.8	52.9	181.3	312	82	80	69	0.055	1.001	22.171	2852
129	20.594	20.432		0.16	0.16	1.28	1.02	0.36	81	81	69	2.94	2.00	116	0.044	106	102	292.0	0.91	2.68	15.4479704	129.3	183.3	162.5	52.9	182.2	312	82	80	69	0.045	1.001	22.332	2892
130	20.753	20.589		0.16	0.16	1.28	1.05	0.36	81	81	69	2.95	1.90	93	0.045	103	99	291.1	0.96	2.68	15.5370073	129.9	183.7	163.1	52.8	182.7	273	79	78	69	0.043	1.001	22.330	2904
131	20.910	20.747		0.16	0.16	1.27	1.05	0.36	81	81	69	2.94	1.90	89	0.044	103	101	290.2	0.89	2.66	15.4413748	129.9	183.7	163.1	52.8	182.7	254	78	77	69	0.041	1.001	22.172	2883
132	21.068	20.907		0.16	0.16	1.28	1.05	0.36	81	81	68	2.95	1.90	85	0.047	100	98	290.3	-0.08	2.62	15.4238329	129.9	183.7	163.0	52.8	182.7	241	77	77	68	0.040	1.001	21.846	2840
133	21.225	21.066		0.16	0.16	1.27	1.05	0.36	81	81	69	2.95	1.90	84	0.046	100	99	290.2	0.13	2.66	15.4029293	129.6	183.5	162.8	52.9	182.4	232	76	76	69	0.041	1.001	22.163	2876
134	21.383	21.225		0.16	0.16	1.28	1.05	0.36	81	81	69	2.95	1.90	80	0.048	98	96	289.5	0.68	2.74	15.4806108	129.6	183.4	162.7	52.8	182.4	228	74	74	69	0.039	1.001	22.816	2959
135	21.542	21.384		0.16	0.16	1.28	1.05	0.36	81	81	69	2.93	1.80	79	0.046	101	98	290.1	-0.59	2.43	15.4582691	129.7	183.4	164.4	52.8	182.6	223	74	74	69	0.039	1.001	20.240	2629
136	21.700	21.543		0.16	0.16	1.29	1.05	0.36	81	81	68	2.93	1.80	78	0.047	99	97	289.8	0.24	2.58	15.4654198	129.4	183.2	163.6	52.9	182.3	219	73	73	68	0.038	1.001	21.525	2790
137	21.859	21.702		0.16	0.16	1.29	1.06	0.36	81	81	69	2.91	1.80	77	0.047	99	97	289.2	0.61	2.62	15.3753958	129.2	182.9	163.5	52.9	182.0	215	73	72	69	0.037	1.001	21.840	2824
138	22.018	21.862		0.16	0.16	1.28	1.06	0.36	81	81	68	2.92	1.80	77	0.045	102	100	289.3	-0.08	2.53	15.4994955	128.9	182.6	163.2	52.9	181.8	212	72	71	68	0.036	1.001	21.081	2721
139	22.177	22.022		0.16	0.16	1.29	1.06	0.36	81	81	68	2.90	1.80	76	0.043	104	102	290.1	-0.87	2.58	15.4997997	128.7	182.5	163.0	52.9	181.6	209	72	70	68	0.034	1.001	21.529	2774
140	22.335	22.182		0.16	0.16	1.29	1.07	0.36	81	81	69	2.90	1.80	75	0.045	101	99	289.6	0.59	2.50	15.5178461	128.5	182.1	163.5	52.9	181.4	211	71	69	69	0.033	1.001	20.814	2677
141	22.495	22.343		0.16	0.16	1.29	1.07	0.36	81	81	69	2.90	1.80	74	0.045	102	100	289.6	-0.08	2.65	15.5176182	128.0	181.8	162.0	52.9	180.9	210	70	68	69	0.032	1.001	22.066	2828
142	22.654	22.503		0.16	0.16	1.30	1.07	0.36	81	81	68	2.89	1.80	74	0.044	102	100	289.6	0.05	2.64	15.4700241	127.6	181.4	161.4	52.9	180.5	208	69	68	68	0.031	1.001	22.012	2813
143	22.813	22.663		0.16	0.16	1.30	1.07	0.36	81	81	69	2.88	1.80	74	0.046	100	98	289.4	0.19	2.71	15.4050112	127.1	180.9	160.8	52.9	180.0	206	69	67	69	0.031	1.001	22.557	2871
144	22.973	22.825		0.16	0.16	1.30	1.07	0.36	81	81	68	2.87	1.80	74	0.048	99	97	289.6	-0.19	2.62	15.4406509	126.8	180.7	160.7	52.9	179.7	203	68	67	68	0.030	1.001	21.852	2775
145	23.133	22.986		0.16	0.16	1.30	1.07	0.36	81	81	68	2.86	1.80	74	0.048	99	97	290.3	-0.74	2.66	15.4899292	126.5	180.3	160.1	52.8	179.3	200	68	66	68	0.030	1.001	22.176	2809
146	23.293	23.146		0.16	0.16	1.31	1.07	0.36	81	81	68	2.86	1.80	74	0.045	102	99	289.8	0.57	2.68	15.4521151	126.1	180.0	159.6	52.8	179.0	198	68	66	68	0.029	1.001	22.336	2821
147	23.453	23.308		0.16	0.16	1.31	1.09	0.36	81	81	68	2.86	1.80	74	0.045	102	101	290.1	-0.31	2.68	15.4900961	125.7	179.6	159.3	52.8	178.5	195	67	65	68	0.028	1.001	22.340	2812
148	23.613	23.471		0.16	0.16	1.31	1.09	0.36	81	81	68	2.86	1.80	74	0.044	103	102	290.1	-0.07	2.58	15.4132051	125.3	179.1	159.4	52.8	178.1	192	67	65	68	0.028	1.001	21.534	2702
149	23.773	23.632		0.16	0.16	1.31	1.09	0.36	81	81	68	2.85	1.70	74	0.042	106	103	290.6	-0.45	2.81	15.4558964	124.9	178.7	158.5	52.8	177.7	189	67	65	68	0.027	1.001	23.469	2934
150	23.934	23.794		0.16	0.16	1.31	1.10	0.36	81	81	68	2.85	1.70	74	0.046	102	99	290.5	0.09	2.68	15.4077072	124.1	178.0	157.8	52.8	177.0	186	66	65	68	0.027	1.001	22.335	2776
151	24.094	23.957		0.16	0.16	1.31	1.08	0.36	81	81	68	2.84	1.70	74	0.047	100	99	289.6	0.85	2.78	15.5276461	124.0	177.9	157.7	52.8	176.8	184	66	65	68	0.026	1.001	23.145	2873
152	24.255	24.115		0.16	0.16	1.31	1.01	0.36	81	81	68	2.83	1.60	73	0.042	106	101	290.1	-0.47	2.78	15.4535885	123.4	177.3	157.2	52.8	176.2	181	66	65	68	0.026	1.001	23.145	2859
153	24.415	24.271		0.16	0.16	1.31	1.01	0.36	81	81	68	2.83	1.60	73	0.046	101	96	290.5	-0.38	2.70	15.444665	123.1	177.0	156.9	52.8	175.9	179	66	65	68	0.025	1.001	22.495	2772
154	24.576	24.429		0.16	0.16	1.32	1.02	0.36	81	81	68	2.82	1.60	73	0.047	100	96	290.0	0.46	2.74	15.467926	122.5	176.4	156.4	52.8	175.3	177	66	65	68	0.025	1.001	22.819	2800
155	24.736	24.585		0.16	0.16	1.32	1.02	0.36	81	81	68	2.83	1.60	73	0.045	102	97	290.4	-0.36	2.85	15.4612217	122.2	175.9	156.8	52.8	175.0	174	66	66	68	0.025	1.001	23.792	2911
156	24.897	24.743		0.16	0.16	1.32	1.02	0.36	80	81	68	2.81	1.60	73	0.045	103	98	290.2	0.20	2.66	15.4912968	121.6	175.4	155.7	52.8	174.4	172	66	66	68	0.024	1.001	22.176	2700
157	25.058	24.899		0.16	0.16	1.33	1.03	0.36	80	81	68	2.81	1.60	73	0.045	103	97	290.2	0.03	2.68	15.4702082	121.2	175.0	155.4	52.8	174.0	170	66	66	68	0.024	1.001	22.334	2710
158	25.219	25.057		0.16	0.16	1.33	1.03	0.36	81	81	68	2.81	1.50	73	0.045	103	98	290.6	-0.40	2.74	15.5078945	120.7	174.5	154.9	52.8	173.5	168	67	66	68	0.023	1.001	22.819	2757
159	25.381	25.215		0.16	0.16	1.33	1.03	0.36	81	81	68	2.80	1.50	73	0.044	104	99	290.6	-0.08	2.72	15.5560122	120.3	174.2	154.5	52.8	173.1	166	67	66	68	0.023	1.001	22.663	2730
160	25.542	25.373		0.16	0.16	1.33	1.03	0.36	80	81	68	2.81	1.50	73	0.046	102	97	290.6	0.02	2.70	15.4045477	120.0	173.8	154.3	52.8	172.8	164	67	66	68	0.022	1.001	22.480	2702
161	25.703	25.531		0.16	0.16	1.33	1.03	0.36	80	81	68	2.81	1.50	73	0.042	106	101	290.9	-0.24	2.72	15.4135504	119.4	173.2	153.7	52.8	172.2	162	67	66	68	0.022	1.001	22.670	2710
162	25.864	25.689		0.16	0.16	1.33	1.03	0.36	80	81	68	2.79	1.50	73	0.044	104	99	290.7	0.19	2.69	15.5564442	119.0	172.8	153.5	52.8	171.8	160	67	66	68	0.022	1.001	22.448	2675
163	26.026	25.848		0.16	0.16	1.33	1.04	0.36	80	81	68	2.79	1.50	73	0.039	111	106	290.6	0.09	2.83	15.4318829	118.4	172.1	153.0	52.7	171.2	158	67	66	68	0.021	1.001	23.631	2801
164	26.187	26.007		0.16	0.16	1.33	1.04	0.36	80	81	68	2.80	1.50	73	0.045	103	99	290.6	-0.04	2.74	15.4961939	118.0	171.8	152.6	52.8	170.8	156	67	66	68	0.021	1.001	22.828	2696
165	26.349	26.165		0.16	0.16	1.33	1.04	0.36	80	81	68	2.80	1.50	73	0.046	102	97	290.9	-0.27	2.79	15.5848322	117.5	171.4	152.2	52.8	170.3	154	67	66	68	0.020	1.001	23.273	2739
166	26.511	26.325		0.16	0.16	1.33	1.04	0.36	80	81	68	2.77	1.50	73	0.044	105	100	290.7	0.19	2.72	15.4134912	117.0	170.8	151.8	52.8	169.8	153	67	67	68	0.020	1.001	22.667	2656
167	26.673	26.483		0.16	0.16	1.33	1.04	0.36	80	81	68	2.79	1.50	73	0.045	103	98	291.1	-0.35	2.76	15.5651255	116.6	170.4	151.3	52.8	169.3	152	67	67	68	0.020	1.001	22.987	2683
168	26.834	26.641		0.16	0.16	1.34	1.04	0.36	80	81	68	2.78	1.50	73	0.048	99	95	291.1	-0.05	2.56	15.43188	116.2	169.9	151.5	52.7	168.9	150	67	67	68	0.020	1.001	21.373	2486
169	26.996	26.801		0.16	0.16	1.33	1.04	0.36	80	81	68	2.78	1.50	73	0.046	102	98	291.0	0.07	2.78	15.5283518	115.8	169.5	150.8	52.8	168.5	149	67	67	68	0.019	1.001	23.142	2682
170	27.157	26.959		0.16	0.16	1.31	1.04	0.36	81	81	68	2.74	1.50	72	0.045	102	98	291.1	-0.10	2.70	15.4226389	115.2	169.0	150.2	52.8	167.9	147	67	67	68	0.019	1.001	22.502	2595
171	27.317	27.119		0.16	0.16	1.31	1.04	0.36	80	81	68	2.74	1.50	72	0.045	102	99	290.7	0.44	2.68	15.4900398	114.6	168.4	149.8	52.7	167.4	145	67	67	68	0.019	1.001	22.340	2564
172	27.477	27.277		0.16	0.16	1.32	1.05	0.36	80	81	68	2.75	1.50	72	0.044	103	99	291.1	-0.37	2.74	15.4940243	114.2	167.9	149.3	52.7	166.9	144	67	67	68	0.019	1.001	22.819	2608
173	27.638	27.435		0.16	0.16	1.32	1.04	0.36	80	81	68	2.75	1.50	72	0.047	100	96	291.1	-0.02	2.76	15.4344902	113.8	167.6	149.0	52.8	166.5	142	67	67	68	0.018	1.001	22.982	2618

Elapsed Time	Particulate Sampling Data																	Fuel Weight, lb		Flow, gpm		Temperature Data, oF														
	Gas Meter Cubic Feet (1)	Gas Meter Cubic Feet (2)	Gas Meter Cubic Feet (amb)	Sample Rate, cfm (1)	Sample Rate, cfm (2)	Orifice dH (1)	Orifice dH (2)	Orifice dH (amb)	Meter oF (1)	Meter oF (2)	Meter oF (amb)	Meter Vac. In. Hg. (1)	Meter Vac. In. Hg. (2)	Dilution Tunnel Temp.	Dilution Tunnel dP	Pro. Rate (%) (1)	Pro. Rate (%) (2)	Scale Reading	Weight Change	Load Side Liquid Flow Rate	Boiler Side Liquid Flow Rate (optional)	Thermopile ΔT	Boiler to Heat Exch. Temp.	Heat Exch to Boiler Temp.	Inlet Load Temp.	Outlet Load Temp.	Stack	Filter (1)	Filter (2)	Ambient	Stack Draft	Specific Heat of Inlet Water (BTU/lb-°F)	Mass Flow Rate of Inlet Water (lb/min)	Heat Output, Btu
174	27.798	27.590		0.16	0.16	1.31	0.96	0.36	80	81	68	2.75	1.40	72	0.044	103	97	291.0	0.06	2.76	15.5732193	113.2	167.1	148.4	52.8	166.0	141	67	67	68	0.018	1.001	22.985	2606
175	27.958	27.743		0.16	0.15	1.31	0.97	0.36	80	81	68	2.75	1.40	72	0.047	100	93	291.1	-0.11	2.70	15.441124	112.9	166.6	148.3	52.8	165.6	140	67	67	68	0.017	1.001	22.497	2542
176	28.118	27.896		0.16	0.15	1.32	0.96	0.36	80	81	68	2.74	1.40	72	0.046	101	94	291.1	-0.01	2.76	15.4702311	112.2	166.0	147.7	52.8	165.0	139	67	67	68	0.018	1.001	22.982	2583
177	28.279	28.049		0.16	0.15	1.32	0.96	0.36	80	81	68	2.74	1.40	72	0.045	103	95	291.1	0.00	2.78	15.4135904	111.8	165.5	147.4	52.8	164.6	137	67	67	68	0.017	1.001	23.147	2591
178	28.439	28.201		0.16	0.15	1.31	0.96	0.36	80	81	68	2.74	1.40	72	0.046	101	93	291.1	0.02	2.74	15.5081873	111.2	165.0	146.8	52.8	164.0	136	67	67	68	0.017	1.001	22.820	2541
179	28.600	28.354		0.16	0.15	1.32	0.96	0.36	80	81	68	2.74	1.40	72	0.047	100	93	291.1	0.05	2.70	15.4994078	110.8	164.6	146.5	52.8	163.6	135	67	67	68	0.017	1.001	22.501	2496
180	28.760	28.508		0.16	0.15	1.30	0.96	0.36	81	81	68	2.74	1.40	72	0.046	101	94	291.1	-0.04	2.78	15.4898977	110.4	164.2	146.1	52.7	163.2	134	67	67	68	0.017	1.001	23.147	2559
181	28.920	28.660		0.16	0.15	1.31	0.96	0.36	80	81	68	2.74	1.40	72	0.043	104	96	290.9	0.19	3.12	15.4903307	109.0	163.4	142.9	52.7	161.7	132	67	67	68	0.017	1.001	26.054	2842
182	29.081	28.815		0.16	0.16	1.31	1.00	0.36	80	81	68	2.74	1.50	72	0.044	104	97	291.6	-0.67	3.16	15.4699831	108.4	162.8	142.4	52.6	161.1	131	67	67	68	0.016	1.001	26.332	2859
183	29.241	28.971		0.16	0.16	1.30	1.00	0.36	80	81	68	2.74	1.50	72	0.043	104	99	291.1	0.47	3.13	15.4898462	107.9	162.2	142.0	52.6	160.5	130	68	67	68	0.016	1.001	26.068	2816
184	29.401	29.127		0.16	0.16	1.30	0.99	0.36	80	81	68	2.76	1.50	75	0.046	101	96	290.7	0.40	3.01	15.5181475	107.6	161.8	142.2	52.6	160.2	142	68	67	68	0.032	1.001	25.135	2707
185	29.561	29.281		0.16	0.15	1.30	0.99	0.36	80	81	68	2.77	1.50	88	0.047	101	95	289.8	0.92	3.23	15.5367622	106.9	161.2	141.1	52.6	159.5	189	69	68	68	0.039	1.001	26.963	2886
186	29.720	29.436		0.16	0.16	1.31	0.99	0.36	80	81	68	2.77	1.50	93	0.043	106	100	288.7	1.11	3.14	15.5654221	106.3	160.6	140.6	52.6	158.9	221	70	69	68	0.042	1.001	26.177	2786
187	29.879	29.590		0.16	0.15	1.31	0.99	0.36	80	81	68	2.78	1.50	97	0.045	104	98	287.3	1.36	3.20	15.5453796	106.0	160.4	140.3	52.6	158.6	241	70	69	68	0.046	1.001	26.688	2832
188	30.038	29.745		0.16	0.16	1.31	0.99	0.36	80	81	68	2.80	1.50	100	0.045	104	99	287.1	0.25	3.18	15.4578075	106.1	160.5	140.4	52.6	158.7	255	70	69	68	0.047	1.001	26.534	2817
189	30.198	29.899		0.16	0.15	1.31	0.99	0.36	80	81	68	2.79	1.50	103	0.044	106	99	284.9	2.23	3.09	15.4410543	106.0	160.5	140.4	52.6	158.6	265	71	70	68	0.046	1.001	25.728	2731
190	30.357	30.052		0.16	0.15	1.31	0.99	0.36	80	81	68	2.80	1.50	105	0.044	106	99	284.3	0.54	3.18	15.4390469	106.2	160.7	140.6	52.7	158.9	274	72	70	68	0.048	1.001	26.534	2822
191	30.517	30.206		0.16	0.15	1.31	0.98	0.36	80	81	68	2.80	1.50	107	0.042	109	102	283.2	1.09	3.09	15.364583	106.7	161.3	140.9	52.6	159.3	279	72	71	68	0.054	1.001	25.727	2748
192	30.676	30.359		0.16	0.15	1.30	0.98	0.36	80	81	68	2.80	1.50	109	0.046	104	97	281.5	1.72	3.18	15.4432812	106.9	161.4	141.1	52.6	159.5	284	73	71	68	0.052	1.001	26.531	2840
193	30.835	30.513		0.16	0.15	1.30	0.98	0.36	80	81	68	2.80	1.50	111	0.044	106	100	280.4	1.15	3.12	15.5315132	107.3	161.8	141.4	52.6	159.9	289	74	72	68	0.055	1.001	26.043	2798
194	30.993	30.667		0.16	0.15	1.30	0.97	0.36	80	81	68	2.82	1.60	112	0.041	109	104	278.7	1.68	3.18	15.3176966	107.8	162.3	141.8	52.6	160.4	293	75	73	68	0.052	1.001	26.531	2864
195	31.151	30.818		0.16	0.15	1.30	0.97	0.36	80	81	68	2.82	1.60	113	0.041	109	102	277.0	1.72	3.22	15.4315805	108.5	163.0	142.4	52.6	161.1	297	76	73	68	0.057	1.001	26.859	2919
196	31.310	30.971		0.16	0.15	1.30	0.97	0.36	80	81	68	2.84	1.60	113	0.046	104	97	275.4	1.58	3.14	15.4993715	109.3	163.8	143.0	52.6	161.8	297	76	74	68	0.052	1.001	26.204	2867
197	31.468	31.124		0.16	0.15	1.29	0.97	0.36	80	81	68	2.84	1.60	113	0.044	106	100	274.6	0.82	3.09	15.4611378	109.7	164.3	143.4	52.6	162.3	299	77	74	68	0.055	1.001	25.730	2827
198	31.626	31.277		0.16	0.15	1.29	1.01	0.36	80	81	68	2.84	1.60	114	0.045	105	98	272.4	2.19	3.07	15.4226046	110.5	165.0	144.0	52.6	163.1	300	78	75	68	0.056	1.001	25.562	2827
199	31.785	31.433		0.16	0.16	1.29	1.00	0.36	80	81	68	2.85	1.70	114	0.046	104	99	272.0	0.41	3.24	15.5175219	111.3	165.9	144.7	52.6	163.9	300	78	75	68	0.058	1.001	27.056	3014
200	31.942	31.587		0.16	0.15	1.28	1.00	0.36	80	81	68	2.85	1.70	114	0.038	113	108	270.0	2.00	3.22	15.4997864	112.1	166.6	145.4	52.6	164.7	301	79	76	68	0.053	1.001	26.847	3013
201	32.100	31.742		0.16	0.16	1.29	1.00	0.36	80	81	68	2.85	1.70	115	0.039	112	107	268.8	1.16	3.16	15.4133043	112.7	167.3	145.9	52.6	165.3	303	79	77	68	0.053	1.001	26.351	2974
202	32.257	31.895		0.16	0.15	1.28	0.99	0.36	80	81	68	2.86	1.70	116	0.038	113	107	266.9	1.87	3.14	15.5253391	113.4	168.0	146.5	52.6	166.0	304	80	77	68	0.058	1.001	26.215	2977
203	32.414	32.049		0.16	0.15	1.29	0.99	0.36	80	81	68	2.88	1.70	116	0.043	107	102	265.6	1.37	3.16	15.4864721	114.0	168.6	147.0	52.6	166.6	305	80	77	68	0.057	1.001	26.368	3009
204	32.572	32.203		0.16	0.15	1.28	0.99	0.36	80	81	68	2.88	1.70	116	0.045	105	99	264.5	1.09	3.16	15.4698296	114.6	169.2	147.5	52.6	167.2	306	80	78	68	0.059	1.001	26.370	3025
205	32.730	32.357		0.16	0.15	1.27	0.98	0.36	80	81	68	2.89	1.70	114	0.044	106	100	262.8	1.63	3.16	15.4613495	115.5	170.1	148.2	52.6	168.1	303	80	78	68	0.055	1.001	26.375	3049
206	32.888	32.510		0.16	0.15	1.31	0.98	0.36	80	81	68	2.97	1.70	114	0.043	107	101	261.5	1.38	3.12	15.4997339	116.1	170.7	148.7	52.6	168.7	303	81	78	68	0.057	1.001	26.053	3028
207	33.048	32.663		0.16	0.15	1.31	0.98	0.36	80	81	68	2.96	1.70	116	0.040	113	105	259.7	1.80	3.22	15.4611807	116.8	171.4	149.4	52.6	169.4	306	81	79	68	0.054	1.001	26.854	3140
208	33.207	32.815		0.16	0.15	1.31	0.97	0.36	80	81	68	2.96	1.70	115	0.042	109	101	258.1	1.56	3.22	15.4358377	117.5	172.2	149.8	52.6	170.2	305	81	79	68	0.054	1.001	26.855	3160
209	33.366	32.968		0.16	0.15	1.30	0.97	0.36	80	81	68	2.97	1.70	112	0.042	109	102	256.2	1.85	3.18	15.4613066	118.3	172.9	150.5	52.6	170.9	299	81	79	68	0.050	1.001	26.532	3142
210	33.524	33.119		0.16	0.15	1.31	0.96	0.36	80	81	68	3.00	1.80	116	0.040	111	103	254.9	1.31	3.24	15.4230804	119.0	173.6	151.1	52.6	171.6	306	81	79	68	0.058	1.001	27.019	3218
211	33.683	33.271		0.16	0.15	1.30	0.96	0.36	80	81	68	2.99	1.80	114	0.040	112	104	253.9	1.04	3.16	15.4897108	119.7	174.3	151.6	52.6	172.3	304	81	79	68	0.051	1.001	26.377	3160
212	33.841	33.422		0.16	0.15	1.28	0.98	0.36	80	81	68	3.04	2.00	114	0.044	106	98	252.3	1.60	3.17	15.3365068	120.3	175.0	152.2	52.6	172.9	304	82	79	68	0.057	1.001	26.435	3184
213	34.001	33.575		0.16	0.15	1.30	1.01	0.36	80	81	68	2.99	1.90	116	0.042	110	102	250.5	1.81	3.20	15.4794455	121.0	175.7	152.7	52.6	173.6	307	82	80	68	0.058	1.001	26.684	3233
214	34.159	33.731		0.16	0.16	1.30	1.00	0.36	80	81	68	3.01	2.00	118	0.041	110	106	249.2	1.30	3.21	15.4408722	121.5	176.3	153.2	52.6	174.1	311	82	80	68	0.058	1.001	26.808	3262
215	34.318	33.883		0.16	0.15	1.30	0.98	0.36	80	81	68	2.99	2.00	115	0.043	108	100	247.9	1.23	3.10	15.4028997	122.4	177.1	153.8	52.6	175.0	308	82	80	68	0.060	1.001	25.890	3172
216	34.476	34.038		0.16	0.15	1.30	1.02	0.36	80	81	68	2.99	1.90	116	0.043	107	102	246.2	1.70	3.16	15.4596844	123.1	177.8	154.4	52.6	175.7	308	82	80	68	0.056	1.001	26.377	3251
217	34.635	34.194		0.16	0.16	1.30	1.01	0.36	80	81	68	2.98	1.90	117	0.039	113	108	244.9	1.37	3.14	15.3753614	123.7	178.5	155.0	52.6	176.3	311	82	80	68	0.056	1.001	26.211	3247
218	34.793	34.348		0.16	0.15	1.30	1.00	0.36	80	81	68	3.01	1.90	116	0.043	107	102	243.7	1.19	3.28	15.4993944	124.4	179.1	155.9	52.6	177.0	311	82	80	68	0.060	1.001	27.350	3406
219	34.952	34.504		0.16	0.16	1.30	0.99	0.36	80	81	68	2.99	2.00	116	0.046	104	99	242.6	1.07	3.12	15.3752871	125.1	179.8	156.1	52.6	177.7	311	82	80	68	0.058	1.001	26.044	3262
220	35.110	34.658		0.16	0.15	1.30	1.00	0.36	80	81	68	3.00	1.90	117	0.041	110	104	241.0	1.58	3.18	15.4703636	125.7	180.5	156.6	52.6	178.3	312	82	80	68	0.058	1.001	26.536	3339
221	35.270	34.813		0.16	0.16	1.29	0.98	0.36	80	81	68	3.01	2.00	116	0.046	105	99	239.8	1.24	3.09	15.431921	126.5	181.3	157.3	52.6	179.1	311	82	80	68	0.055	1.001	25.731	3259
222	35.428	34.967		0.16	0.15	1.30	1.00	0.36	80	81	68	3.01	2.00	117	0.042	109	103	237.6	2.17	2.91	15.3571596	127.0	181.8	157.7	52.6	179.6	312	82	80	68	0.058	1.001	24.273	3087
223	35.586	35.121		0.16	0.15	1.29	0.99	0.36	80	81	68	3.02	2.00	117	0.043	107	102	236.7	0.96	3.14	15.4137421	128.0	182.7	159.1	52.6	180.7	313	82	80	68	0.056	1.001	26.212	3360
224	35.744	35.275		0.16	0.15	1.30	0.99	0.36	80	81	68	3.01	2.00	114	0.046	103	98	235.7	0.93	3.10	15.4024601	128.6	183.3	159.1	52.6	181.2	309	82	80	68	0.049	1.001	25.884	3332
225	35.901	35.429		0.16	0.15	1.28	0.99	0.36	80	81	68	3.05	2.00	91	0.043	104	99	234.2	1.52	3.18	15.3752832	129.1	183.9	159.5	52.7	181.8	273	80	79	68	0.044	1.001	26.552	3433
226	36.059	35.585		0.16	0.16	1.28	1.00	0.36	80	81	68	3.04	1.90	87	0.045	102	98	233.6	0.60	3.10	15.3934307	129.1	183.8	159.4	52.6	181.7	255	79	78	68	0.043	1.001	25.890	3346
227	36.218	35.740		0.16	0.16	1.25	1.01	0.36	80	81	68	3.21	1.90	83	0.044	104	98	232.6	0.99	3.21	15.4520292	128.9	183.7	159.4	52.6	181.5	242	78	77	68	0.043	1.001	26.771	3455
228	36.375	35.897		0.16	0.16	1.26	1.02	0.36	80	81	68	3.22	1.90	82	0.046	100	97	232.8	-0.16	3.07	15.479599	128.8	183.5	159.3	52.6	181.4	233	77	76	68	0.039	1.001	25.597	3300
229	36.532	36.053		0.16	0.16	1.26	1.01	0.36	80	81	68	3.22	1.90	79	0.048	98	94	232.7	0.05	3.12	15.4230061	128.7	183.4	159.2	52.6	181.3	228	75	75	68	0.041	1.001	25.977	3347
230	36.688	36.209		0.16	0.16	1.26	1.01	0.36	80	81	68	3.20	1.90	78	0.046	99	96	232.1	0.62	3.11	15.4998045	128.6	183.3	159.0	52.6	181.2	223	74	74	68	0.041	1.001	25.902	3335
231	36.846	36.365		0.16	0.16	1.27	0.99	0.36	80	81	68	3.20	1.90	77	0.044	102	98	232.0	0.15	3.14	15.3753662	128.3	183.0	158.8	52.6	180.9	218	73	74	68	0.039	1.001	26.211	3367
232	37.003	36.521		0.16	0.16	1.28	1.02	0.36	80	81	68	3.18	1.90	76	0.042	104	100	231.7	0.21	3.16	15.4411898	128.0	182.7	158.4	52.6	180.6	215	72	73	68	0.040	1.001	26.378	3380
233	37.162	36.678		0.16	0.16	1.27	1.02	0.36	80	81	68	3.18	1.90	76	0.046	101	97	231.2	0.52	3.20	15.4325771	127.7	182.4	158.2	52.6	180.3	212	71	72	68	0.038	1.001	26.697	3414
234	37.320	36.835		0.16	0.16	1.28	1.02	0.36	80	81	68	3.15	1.80	76	0.044	102	99	231.6	-0.40	3.20	15.4793015	127.3	181.9	157.9	52.6	179.9	209	70	71	68	0.037	1.001	26.700	3403
235	37.478	36.993		0.16	0.16	1.28	1.03	0.36	80	81	68	3.14	1.80	73	0.047	99	96	231.6	-0.01	3.07	15.4518967	127.1	181.5	157.9	52.6	179.7	210	69	70	68	0.036	1.001	25.564	3253

Elapsed Time	Particulate Sampling Data																	Fuel Weight, lb		Flow, gpm		Temperature Data, oF													
	Gas Meter Cubic Feet (1)	Gas Meter Cubic Feet (2)	Gas Meter Cubic Feet (amb)	Sample Rate, cfm (1)	Sample Rate, cfm (2)	Orifice dH (1)	Orifice dH (2)	Orifice dH (amb)	Meter oF (1)	Meter oF (2)	Meter oF (amb)	Meter Vac. In. Hg. (1)	Meter Vac. In. Hg. (2)	Dilution Tunnel Temp.	Dilution Tunnel dP	Pro. Rate (%) (1)	Pro. Rate (%) (2)	Scale Reading	Weight Change	Load Side Liquid Flow Rate	Boiler Side Liquid Flow Rate (optional)	Thermopile ΔT	Boiler to Heat Exch. Temp.	Heat Exch to Boiler Temp.	Inlet Load Temp.	Outlet Load Temp.	Stack	Filter (1)	Filter (2)	Ambient	Stack Draft	Specific Heat of Inlet Water (BTU/lb-°F)	Mass Flow Rate of Inlet Water (lb/min)	Heat Output, Btu
236	37.636	37.150		0.16	0.16	1.29	1.03	0.36	80	81	68	3.13	1.80	73	0.043	103	100	231.3	0.31	3.05	15.5754147	126.8	181.3	157.8	52.6	179.4	209	68	69	68	0.036	1.001	25.407	3226
237	37.796	37.309		0.16	0.16	1.29	1.04	0.36	80	81	68	3.11	1.80	73	0.047	100	96	231.3	0.06	3.09	15.4232092	126.4	180.9	157.5	52.6	179.0	207	67	69	68	0.037	1.001	25.741	3258
238	37.955	37.467		0.16	0.16	1.30	1.04	0.36	80	81	68	3.10	1.80	73	0.043	104	100	231.7	-0.47	3.12	15.4793215	125.9	180.4	157.1	52.6	178.5	205	67	68	68	0.037	1.001	26.053	3284
239	38.115	37.626		0.16	0.16	1.31	1.05	0.36	80	81	68	3.07	1.80	73	0.043	104	101	231.4	0.32	3.07	15.3989334	125.4	179.9	156.8	52.6	178.0	203	66	67	68	0.036	1.001	25.569	3210
240	38.275	37.785		0.16	0.16	1.32	1.05	0.36	80	81	68	3.05	1.80	73	0.045	102	99	231.4	-0.01	3.18	15.4611988	125.0	179.6	156.5	52.6	177.7	200	66	67	68	0.036	1.001	26.543	3323
241	38.435	37.944		0.16	0.16	1.32	1.05	0.36	80	81	68	3.03	1.80	73	0.043	104	101	231.3	0.12	3.02	15.4028883	124.6	179.1	156.2	52.6	177.2	197	66	66	68	0.035	1.001	25.209	3145
242	38.596	38.103		0.16	0.16	1.33	1.05	0.36	80	81	68	2.99	1.80	73	0.047	101	96	231.6	-0.24	3.13	15.3364887	124.2	178.8	155.9	52.6	176.9	195	66	66	68	0.034	1.001	26.073	3244
243	38.758	38.264		0.16	0.16	1.34	1.05	0.36	80	81	67	2.98	1.80	72	0.042	107	103	231.5	0.02	3.01	15.4845161	123.8	178.1	156.0	52.6	176.5	192	65	65	67	0.034	1.001	25.079	3110
244	38.920	38.424		0.16	0.16	1.35	1.06	0.36	80	81	68	2.95	1.80	72	0.045	103	99	231.4	0.14	3.01	15.4627562	123.6	177.9	155.8	52.6	176.2	189	65	65	68	0.032	1.001	25.086	3105
245	39.083	38.584		0.16	0.16	1.35	1.07	0.36	80	81	68	2.95	1.70	72	0.045	104	99	231.1	0.34	3.05	15.4136763	122.9	177.2	155.3	52.6	175.5	187	65	64	68	0.032	1.001	25.407	3127
246	39.246	38.745		0.16	0.16	1.36	1.07	0.36	80	81	68	2.92	1.70	72	0.045	104	100	231.5	-0.48	2.96	15.4319792	122.5	176.7	155.0	52.6	175.1	184	65	64	68	0.031	1.001	24.687	3027
247	39.406	38.903		0.16	0.16	1.31	1.04	0.36	80	81	68	2.87	1.70	72	0.046	101	97	231.5	0.05	2.99	15.4407663	122.1	176.4	154.7	52.6	174.7	182	64	64	68	0.031	1.001	24.924	3046
248	39.566	39.062		0.16	0.16	1.32	1.05	0.36	80	81	68	2.86	1.70	72	0.043	104	101	231.5	-0.06	2.95	15.4027643	121.5	175.8	154.3	52.6	174.1	179	64	63	68	0.030	1.001	24.602	2993
249	39.727	39.223		0.16	0.16	1.32	1.05	0.36	80	81	68	2.85	1.60	72	0.046	101	99	231.7	-0.14	2.99	15.4901342	121.1	175.4	153.8	52.6	173.7	177	64	63	68	0.029	1.001	24.919	3021
250	39.888	39.382		0.16	0.16	1.32	1.06	0.36	80	81	68	2.85	1.60	72	0.046	101	97	231.9	-0.24	2.99	15.4193621	120.5	174.8	153.4	52.6	173.1	174	64	63	68	0.029	1.001	24.924	3007
251	40.049	39.542		0.16	0.16	1.32	1.06	0.36	80	81	68	2.84	1.60	72	0.041	108	104	231.5	0.38	2.93	15.4349432	120.0	174.4	153.1	52.6	172.7	173	64	62	68	0.028	1.001	24.445	2938
252	40.210	39.703		0.16	0.16	1.32	1.06	0.36	80	81	68	2.84	1.60	72	0.048	99	97	231.9	-0.40	2.95	15.5083857	119.6	174.0	152.6	52.6	172.2	170	64	63	68	0.028	1.001	24.597	2944
253	40.371	39.863		0.16	0.16	1.32	1.07	0.36	80	81	68	2.85	1.60	72	0.044	104	100	231.9	0.08	2.95	15.3934374	119.1	173.4	152.2	52.6	171.7	168	64	63	68	0.027	1.001	24.600	2932
254	40.532	40.024		0.16	0.16	1.32	1.07	0.36	80	81	68	2.83	1.60	72	0.045	103	100	232.1	-0.27	2.99	15.473485	118.5	172.9	151.9	52.6	171.2	166	64	63	68	0.026	1.001	24.925	2958
255	40.693	40.186		0.16	0.16	1.33	1.08	0.36	80	81	68	2.83	1.60	72	0.046	101	99	232.0	0.11	3.11	15.4668503	117.9	172.3	151.4	52.6	170.6	164	65	64	68	0.026	1.001	25.898	3058
256	40.855	40.344		0.16	0.16	1.33	1.04	0.36	80	81	67	2.82	1.60	72	0.044	104	99	232.0	0.03	2.99	15.5370598	117.6	171.9	151.0	52.6	170.2	163	65	64	67	0.026	1.001	24.928	2935
257	41.016	40.502		0.16	0.16	1.33	1.04	0.36	80	81	67	2.82	1.60	72	0.043	105	100	231.8	0.17	3.03	15.4248714	117.0	171.4	150.5	52.6	169.6	161	65	64	67	0.025	1.001	25.250	2959
258	41.177	40.662		0.16	0.16	1.34	1.04	0.36	80	81	67	2.81	1.50	72	0.045	103	99	231.5	0.34	3.05	15.4998789	116.5	170.8	150.2	52.6	169.1	159	65	64	67	0.025	1.001	25.418	2966
259	41.339	40.820		0.16	0.16	1.34	1.05	0.36	80	81	68	2.82	1.50	72	0.044	104	99	232.1	-0.60	3.04	15.5367346	115.9	170.3	149.6	52.6	168.5	157	65	65	68	0.024	1.001	25.359	2943
260	41.501	40.980		0.16	0.16	1.33	1.05	0.36	80	81	67	2.81	1.50	71	0.047	101	97	231.9	0.15	3.06	15.4409351	115.6	169.9	149.4	52.6	168.2	155	65	65	67	0.024	1.001	25.548	2956
261	41.662	41.139		0.16	0.16	1.33	1.04	0.36	80	81	67	2.81	1.50	72	0.046	101	97	232.1	-0.15	3.04	15.5098906	115.0	169.4	148.9	52.6	167.7	154	66	65	67	0.024	1.001	25.370	2922
262	41.819	41.298		0.16	0.16	1.30	1.04	0.36	80	81	67	2.65	1.50	72	0.048	97	95	231.6	0.45	3.04	15.4994726	114.4	168.7	148.4	52.6	167.0	153	66	65	67	0.023	1.001	25.387	2907
263	41.978	41.458		0.16	0.16	1.30	1.04	0.36	80	81	67	2.65	1.50	72	0.045	101	99	231.7	-0.03	2.95	15.4801168	114.0	168.4	148.1	52.6	166.6	151	66	65	67	0.023	1.001	24.606	2809
264	42.138	41.616		0.16	0.16	1.3	1.05	0.36	80	81	67	2.65	1.5	72	0.044	103	99	232.4	-0.76	3.01	15.3652525	113.4	167.8	147.5	52.6	166.0	149	66	65	67	0.023	1.001	25.085	2848
265	42.298	41.775		0.16	0.16	1.3	1.04	0.36	80	81	67	2.65	1.5	72	0.049	98	94	232.2	0.21	3.11	15.4274073	112.9	167.3	147.1	52.6	165.5	148	66	65	67	0.022	1.001	25.897	2926
266	42.457	41.935		0.16	0.16	1.3	1.05	0.36	80	81	67	2.65	1.5	72	0.045	101	99	231.6	0.61	2.99	15.5227222	112.5	166.9	146.7	52.6	165.1	147	66	65	67	0.021	1.001	24.923	2806
267	42.617	42.093		0.16	0.16	1.3	1.05	0.36	80	81	67	2.65	1.5	72	0.045	102	98	232.1	-0.54	3.11	15.4701929	111.8	166.2	146.3	52.6	164.5	145	66	65	67	0.021	1.001	25.893	2899
268	42.777	42.253		0.16	0.16	1.3	1.05	0.36	80	81	67	2.65	1.5	72	0.045	102	99	232.0	0.11	3.03	15.4796076	111.5	165.9	145.9	52.6	164.1	144	66	66	67	0.021	1.001	25.247	2818
269	42.937	42.412		0.16	0.16	1.31	1.04	0.36	80	81	67	2.64	1.5	72	0.046	101	97	232.4	-0.37	3.01	15.4520359	110.9	165.3	145.5	52.6	163.5	143	66	66	67	0.021	1.001	25.089	2786
270	43.097	42.571		0.16	0.16	1.31	1.05	0.36	80	81	67	2.65	1.5	71	0.042	105	102	232.0	0.42	2.97	15.4135952	110.5	164.9	145.1	52.6	163.1	141	66	66	67	0.020	1.001	24.768	2739
271	43.257	42.731		0.16	0.16	1.31	1.05	0.36	80	81	67	2.64	1.5	72	0.049	98	95	232.2	-0.24	3.03	15.4792852	110.0	164.4	144.7	52.6	162.6	141	66	66	67	0.020	1.001	25.246	2780
272	43.417	42.890		0.16	0.16	1.3	1.05	0.36	80	81	67	2.65	1.5	71	0.044	103	100	232.0	0.26	3.05	15.479516	109.4	163.7	144.2	52.6	162.0	140	66	66	67	0.020	1.001	25.409	2783
273	43.577	43.049		0.16	0.16	1.3	1.05	0.36	80	81	67	2.65	1.5	71	0.047	100	96	231.9	0.04	3.03	15.4746161	109.0	163.4	144.0	52.6	161.6	139	66	66	67	0.019	1.001	25.251	2756
274	43.737	43.209		0.16	0.16	1.31	1.05	0.36	80	81	67	2.64	1.5	71	0.044	103	100	232.3	-0.32	3.03	15.2981472	108.3	162.7	143.4	52.6	160.9	137	67	66	67	0.019	1.001	25.252	2739
275	43.897	43.368		0.16	0.16	1.31	1.05	0.36	80	81	67	2.63	1.5	71	0.045	102	98	231.8	0.47	3.03	15.4517202	108.0	162.3	143.0	52.6	160.6	137	67	66	67	0.019	1.001	25.227	2727
276	44.057	43.528		0.16	0.16	1.3	1.05	0.36	80	81	67	2.64	1.5	71	0.046	101	98	232.4	-0.61	3.09	15.4995089	107.2	161.7	142.1	52.6	159.8	138	67	66	67	0.022	1.001	25.795	2769
277	44.216	43.687		0.16	0.16	1.3	1.04	0.36	80	81	67	2.68	1.6	88	0.048	100	97	231.5	0.91	3.08	15.4605904	106.7	161.3	141.5	52.6	159.3	189	69	67	67	0.040	1.001	25.719	2749
278	44.375	43.844		0.16	0.16	1.3	1.04	0.36	80	81	67	2.68	1.6	93	0.045	103	99	230.0	1.52	3.13	15.4743681	106.1	160.7	141.1	52.6	158.7	218	70	68	67	0.040	1.001	26.061	2770
279	44.534	44.002		0.16	0.16	1.31	1.04	0.36	80	81	67	2.68	1.6	96	0.046	102	99	229.2	0.75	3.15	15.5081396	106.0	160.6	140.9	52.6	158.6	239	70	68	67	0.046	1.001	26.227	2783
280	44.693	44.160		0.16	0.16	1.3	1.03	0.36	80	81	67	2.68	1.6	99	0.044	105	101	227.7	1.50	3.14	15.4992952	105.9	160.4	140.9	52.6	158.5	253	70	68	67	0.042	1.001	26.216	2780
281	44.852	44.318		0.16	0.16	1.31	1.03	0.36	80	81	67	2.68	1.6	101	0.046	103	99	227.8	-0.06	3.09	15.4238777	106.0	160.5	141.0	52.6	158.5	262	71	69	67	0.049	1.001	25.736	2731
282	45.011	44.475		0.16	0.16	1.3	1.03	0.36	80	81	67	2.68	1.6	104	0.038	114	109	226.4	1.37	2.99	15.4410162	106.0	160.6	140.8	52.6	158.6	270	71	69	67	0.048	1.001	24.929	2646
283	45.170	44.632		0.16	0.16	1.3	1.03	0.36	80	81	67	2.7	1.6	105	0.044	106	101	225.0	1.43	3.18	15.4520092	106.4	161.0	140.8	52.5	158.9	276	72	70	67	0.054	1.001	26.543	2827
284	45.329	44.790		0.16	0.16	1.3	1.03	0.36	80	81	67	2.7	1.6	106	0.045	105	101	223.8	1.22	3.20	15.4907923	106.8	161.5	141.1	52.5	159.3	280	72	70	67	0.049	1.001	26.703	2856
285	45.490	44.946		0.16	0.16	1.29	1.03	0.36	80	81	67	2.7	1.6	108	0.043	108	102	222.5	1.26	3.18	15.5266914	107.2	161.8	141.4	52.5	159.7	284	73	71	67	0.052	1.001	26.549	2848
286	45.648	45.103		0.16	0.16	1.3	1.03	0.36	80	81	67	2.7	1.6	109	0.048	101	97	221.4	1.12	3.16	15.443121	107.7	162.4	141.8	52.5	160.3	287	73	71	67	0.054	1.001	26.383	2846
287	45.806	45.259		0.16	0.16	1.29	1.02	0.36	80	81	67	2.7	1.6	110	0.044	105	101	220.1	1.27	3.24	15.546484	108.5	163.2	142.5	52.5	161.0	290	74	72	67	0.056	1.001	27.026	2936
288	45.857	45.415		0.05	0.16	1.29	1.01	0.36	80	81	67	2.71	1.6	111	0.043	34	102	218.8	1.29	3.12	15.5080948	109.3	164.0	143.1	52.5	161.9	293	75	72	67	0.051	1.001	26.056	2852
289	45.914	45.571		0.06	0.16	1.3	1.01	0.36	80	81	67	2.72	1.6	113	0.044	38	101	217.2	1.66	3.23	15.4613342	110.1	164.7	143.8	52.5	162.6	296	75	73	67	0.053	1.001	26.915	2967
290	45.949	45.727		0.03	0.16	1.29	1.00	0.36	80	81	67	2.74	1.7	114	0.048	22	97	216.0	1.20	3.17	15.479434	110.6	165.3	144.0	52.5	163.1	299	76	73	67	0.058	1.001	26.426	2926
291	46.107	45.881		0.16	0.15	1.29	1.00	0.36	80	80	67	2.74	1.7	113	0.044	106	100	214.6	1.33	3.16	15.4947786	111.3	166.0	144.7	52.5	163.8	298	76	74	67	0.052	1.001	26.381	2940
292	46.264	46.037		0.16	0.16	1.28	1.00	0.36	80	80	67	2.74	1.7	114	0.042	108	104	213.6	1.06	3.14	15.5009375	112.1	166.9	145.4	52.5	164.6	301	77	75	67	0.052	1.001	26.208	2942
293	46.429	46.190		0.16	0.15	1.28	1.00	0.36	80	81	67	2.74	1.7	111	0.040	116	104	212.4	1.20	3.12	15.4771109	112.8	167.5	145.9	52.5	165.3	295	77	75	67	0.052	1.001	26.056	2943
294	46.477	46.345		0.05	0.16	1.28	0.99	0.36	80	80	67	2.75	1.7	113	0.044	32	101	210.1	2.22	3.12	15.4994211	113.7	168.4	146.6	52.5	166.2	299	78	75	67	0.056	1.001	26.058	2966
295	46.516	46.499		0.04	0.15	1.28	0.99	0.36	80	80	67	2.76	1.7	114	0.041	27	104	208.9	1.22	3.24	15.4875536	114.3	169.0	147.1	52.5	166.8	302	78	76	67	0.052	1.001	27.026	3092
296	46.561	46.653		0.05	0.15	1.28	0.99	0.36	80	81	67	2.77	1.7	114	0.045	30	99	207.4	1.54	3.22	15.4136581	115.1	169.7	147.7	52.5	167.6	304	79	76	67	0.055	1.001	26.867	3096
297	46.686	46.808		0.13	0.16	1.27	0.99	0.36	80	81	67	2.77	1.7	113	0.043	85	102	206.5	0.89	3.16	15.4795475	115.8	170.5	148.3	52.5	168.3	302	79	76	67	0.054	1.001	26.381	3059

Elapsed Time	Particulate Sampling Data																	Fuel Weight, lb		Flow, gpm		Temperature Data, oF														
	Gas Meter Cubic Feet (1)	Gas Meter Cubic Feet (2)	Gas Meter Cubic Feet (amb)	Sample Rate, cfm (1)	Sample Rate, cfm (2)	Orifice dH (1)	Orifice dH (2)	Orifice dH (amb)	Meter oF (1)	Meter oF (2)	Meter oF (amb)	Meter Vac. In. Hg. (1)	Meter Vac. In. Hg. (2)	Dilution Tunnel Temp.	Dilution Tunnel dP	Pro. Rate (%) (1)	Pro. Rate (%) (2)	Scale Reading	Weight Change	Load Side Liquid Flow Rate	Boiler Side Liquid Flow Rate (optional)	Thermopile ΔT	Boiler to Heat Exch. Temp.	Heat Exch to Boiler Temp.	Inlet Load Temp.	Outlet Load Temp.	Stack	Filter (1)	Filter (2)	Ambient	Stack Draft	Specific Heat of Inlet Water (BTU/lb-°F)	Mass Flow Rate of Inlet Water (lb/min)	Heat Output, Btu	
298	46.724	46.961		0.04	0.15	1.27	0.98	0.36	80	80	67	2.78	1.7	112	0.046	25	97	205.0	1.53	3.20	15.4997072	116.7	171.3	149.0	52.5	169.2	300	79	76	67	0.056	1.001	26.709	3121		
299	46.738	47.115		0.01	0.15	1.27	0.98	0.36	80	80	67	2.78	1.7	116	0.045	9	99	203.8	1.18	3.11	15.3752623	117.4	172.0	149.6	52.5	169.9	306	79	77	67	0.056	1.001	25.895	3044		
300	46.802	47.267		0.06	0.15	1.27	0.98	0.36	80	80	67	2.8	1.7	113	0.043	43	100	201.9	1.87	3.18	15.517519	118.1	172.8	150.1	52.5	170.6	304	80	77	67	0.058	1.001	26.541	3139		
301	46.851	47.420		0.05	0.15	1.26	0.98	0.36	80	80	67	2.8	1.7	114	0.039	35	106	200.2	1.68	3.22	15.4925861	119.0	173.6	150.9	52.5	171.5	304	80	77	67	0.055	1.001	26.865	3202		
302	46.855	47.572		0.00	0.15	1.26	0.89	0.36	80	80	67	2.81	1.9	115	0.042	3	102	199.1	1.13	3.16	15.4988194	119.7	174.3	151.4	52.5	172.1	307	80	78	67	0.056	1.001	26.378	3160		
303	46.907	47.719		0.05	0.15	1.26	0.94	0.36	80	80	67	2.81	1.8	115	0.046	34	94	198.0	1.12	3.21	15.4227448	120.4	175.2	152.0	52.5	172.9	308	80	78	67	0.057	1.001	26.790	3231		
304	46.925	47.870		0.02	0.15	1.25	0.95	0.36	80	80	67	2.82	1.8	116	0.043	12	100	196.2	1.73	3.24	15.4899721	121.3	175.9	152.7	52.5	173.8	309	80	78	67	0.056	1.001	27.009	3280		
305	47.052	48.023		0.13	0.15	1.31	0.98	0.36	80	81	67	2.86	1.9	115	0.041	88	103	195.0	1.27	3.24	15.4613295	122.0	176.6	153.3	52.5	174.5	309	80	78	67	0.059	1.001	27.022	3301		
306	47.212	48.176		0.16	0.15	1.3	1.00	0.36	80	80	67	2.86	1.8	116	0.041	111	104	192.6	2.39	3.16	15.4768629	122.8	177.3	154.1	52.5	175.3	310	80	78	67	0.056	1.001	26.374	3244		
307	47.370	48.330		0.16	0.15	1.3	0.99	0.36	80	80	67	2.87	1.8	116	0.043	107	102	192.3	0.25	3.12	15.5176134	123.7	178.2	154.9	52.5	176.2	311	81	79	67	0.056	1.001	26.055	3227		
308	47.529	48.485		0.16	0.16	1.3	0.99	0.36	80	81	67	2.89	1.8	116	0.043	108	102	190.6	1.73	3.12	15.4518328	124.4	179.0	155.5	52.5	176.9	310	81	79	67	0.057	1.001	26.048	3244		
309	47.688	48.638		0.16	0.15	1.3	0.98	0.36	80	81	67	2.89	1.9	117	0.042	109	102	189.1	1.46	3.18	15.4795246	125.2	179.8	156.1	52.5	177.6	313	81	79	67	0.061	1.001	26.534	3325		
310	47.852	48.791		0.16	0.15	1.3	0.98	0.36	80	81	67	2.89	1.9	117	0.044	110	100	187.9	1.27	3.16	15.4135523	126.0	180.5	156.7	52.5	178.5	312	81	79	67	0.058	1.001	26.381	3328		
311	48.008	48.943		0.16	0.15	1.3	0.95	0.36	80	81	67	2.89	1.9	116	0.042	107	101	186.4	1.51	3.13	15.4414148	126.9	181.3	157.5	52.5	179.4	312	81	79	67	0.055	1.001	26.060	3310		
312	48.165	49.095		0.16	0.15	1.3	0.98	0.36	80	80	67	2.91	1.9	116	0.040	110	104	184.8	1.59	3.14	15.4384174	127.9	182.2	158.5	52.5	180.3	312	81	79	67	0.058	1.001	26.225	3357		
313	48.324	49.249		0.16	0.15	1.3	1.02	0.36	80	81	67	2.92	2	117	0.040	112	105	183.5	1.30	3.05	15.446785	128.5	182.9	159.1	52.5	181.0	313	81	79	67	0.059	1.001	25.412	3269		
314	48.483	49.406		0.16	0.16	1.3	1.05	0.36	80	81	67	2.92	2	109	0.043	107	103	182.8	0.64	3.10	15.4795332	129.1	183.5	159.6	52.5	181.6	306	81	79	67	0.045	1.001	25.889	3346		
315	48.641	49.565		0.16	0.16	1.28	1.06	0.36	80	81	67	2.91	1.9	91	0.044	104	101	182.5	0.38	3.09	15.4026432	129.8	184.1	160.3	52.5	182.2	272	78	77	67	0.044	1.001	25.736	3343		
316	48.799	49.724		0.16	0.16	1.28	1.05	0.36	80	81	67	2.92	1.9	87	0.044	103	101	180.5	1.94	3.05	15.4782982	129.8	184.1	160.3	52.5	182.3	255	77	77	67	0.041	1.001	25.435	3306		
317	48.957	49.882		0.16	0.16	1.29	1.05	0.36	80	81	67	2.92	1.9	84	0.044	103	100	180.5	0.04	3.09	15.4136715	129.7	184.1	160.1	52.5	182.2	243	76	76	67	0.041	1.001	25.729	3342		
318	49.116	50.043		0.16	0.16	1.29	1.05	0.36	80	81	67	2.92	1.9	84	0.045	102	101	180.2	0.31	3.10	15.3795958	129.6	184.0	160.1	52.5	182.1	235	76	75	67	0.039	1.001	25.818	3351		
319	49.260	50.201		0.14	0.16	1.29	1.06	0.36	80	81	67	2.9	1.9	79	0.046	91	97	180.3	-0.10	3.10	15.4227915	129.7	184.1	160.2	52.5	182.2	230	74	74	67	0.042	1.001	25.891	3363		
320	49.412	50.361		0.15	0.16	1.29	1.06	0.36	80	81	67	2.89	1.9	78	0.043	100	102	179.6	0.62	3.09	15.4700823	129.5	183.9	160.0	52.5	182.0	224	73	73	67	0.040	1.001	25.726	3335		
321	49.538	50.522		0.13	0.16	1.29	1.06	0.36	80	80	67	2.88	1.9	77	0.044	82	102	179.6	0.02	3.03	15.3909025	129.2	183.6	159.7	52.5	181.7	220	72	72	67	0.040	1.001	25.246	3266		
322	49.697	50.681		0.16	0.16	1.3	1.06	0.36	80	81	67	2.89	1.9	76	0.046	101	98	179.6	0.01	3.01	15.4782	129.1	183.4	159.9	52.5	181.6	216	71	72	67	0.039	1.001	25.088	3243		
323	49.856	50.842		0.16	0.16	1.29	1.07	0.36	80	81	67	2.88	1.9	75	0.048	98	97	178.8	0.79	3.13	15.4710894	128.7	183.1	159.5	52.4	181.2	213	71	71	67	0.038	1.001	26.064	3359		
324	50.017	51.003		0.16	0.16	1.29	1.07	0.36	80	81	67	2.88	1.9	74	0.046	102	99	178.8	0.00	2.97	15.4988842	128.8	182.9	160.0	52.5	181.3	210	70	70	67	0.036	1.001	24.766	3193		
325	50.147	51.164		0.13	0.16	1.3	1.07	0.36	80	81	67	2.86	1.9	73	0.046	82	99	178.8	0.03	2.97	15.4226341	128.9	182.7	160.6	52.5	181.4	211	69	69	67	0.037	1.001	24.763	3196		
326	50.298	51.324		0.15	0.16	1.3	1.07	0.36	80	81	67	2.87	1.9	73	0.043	99	102	178.9	-0.10	2.93	15.3362589	128.3	182.1	160.2	52.5	180.8	210	69	68	67	0.038	1.001	24.437	3140		
327	50.462	51.486		0.16	0.16	1.31	1.08	0.36	80	81	67	2.86	1.9	72	0.044	106	102	178.9	-0.02	2.87	15.461194	128.0	181.8	160.0	52.5	180.5	208	69	68	67	0.039	1.001	23.960	3071		
328	50.563	51.648		0.10	0.16	1.31	1.08	0.36	80	81	67	2.85	1.8	72	0.043	66	103	178.8	0.11	2.87	15.3957043	127.6	181.5	159.5	52.5	180.1	206	68	67	67	0.039	1.001	23.956	3061		
329	50.577	51.809		0.01	0.16	1.31	1.08	0.36	80	81	67	2.85	1.8	72	0.044	9	101	178.5	0.28	2.91	15.4584379	127.3	181.2	159.4	52.5	179.8	203	68	67	67	0.039	1.001	24.294	3095		
330	50.612	51.965		0.04	0.16	1.31	1.01	0.36	80	81	67	2.84	1.7	72	0.045	22	97	178.9	-0.42	2.89	15.4611692	126.9	180.9	159.0	52.5	179.4	200	67	66	67	0.038	1.001	24.121	3065		
331	50.658	52.122		0.05	0.16	1.31	1.01	0.36	80	81	67	2.83	1.7	72	0.044	30	98	178.9	0.08	2.91	15.4483519	126.4	180.4	158.6	52.5	179.0	198	67	66	67	0.037	1.001	24.267	3072		
332	50.789	52.278		0.13	0.16	1.32	1.02	0.36	80	81	67	2.83	1.7	72	0.045	83	97	179.2	-0.37	2.89	15.5050955	126.1	180.1	158.5	52.5	178.7	195	66	65	67	0.036	1.001	24.120	3046		
333	50.901	52.436		0.11	0.16	1.31	1.01	0.36	80	81	67	2.82	1.7	72	0.045	71	98	178.8	0.41	2.87	15.364953	125.6	179.6	157.9	52.5	178.2	192	66	65	67	0.035	1.001	23.952	3013		
334	51.062	52.592		0.16	0.16	1.31	1.02	0.36	80	81	67	2.81	1.7	72	0.046	101	96	179.2	-0.36	2.94	15.4587584	125.2	179.1	157.5	52.5	177.7	190	66	64	67	0.035	1.001	24.514	3072		
335	51.229	52.750		0.17	0.16	1.32	1.03	0.36	80	81	67	2.82	1.7	72	0.047	104	96	179.2	0.00	2.99	15.4699354	124.9	178.8	157.3	52.5	177.3	187	65	64	67	0.034	1.001	24.900	3113		
336	51.406	52.907		0.18	0.16	1.32	1.03	0.36	80	80	67	2.81	1.70	72	0.045	113	97	179.1	0.07	2.88	15.4041014	124.3	178.2	156.8	52.5	176.8	185	65	63	67	0.033	1.001	24.054	2994		
337	51.571	53.066		0.16	0.16	1.33	1.04	0.36	80	81	67	2.80	1.70	72	0.045	105	99	178.4	0.66	2.87	15.4409266	123.8	177.7	156.5	52.5	176.3	182	65	63	67	0.033	1.001	23.958	2970		
338	51.749	53.224		0.18	0.16	1.33	1.03	0.36	80	80	67	2.80	1.70	72	0.044	115	99	179.5	-1.03	2.91	15.5283747	123.3	177.2	156.0	52.5	175.8	180	65	63	67	0.032	1.001	24.282	2998		
339	51.889	53.383		0.14	0.16	1.33	1.04	0.36	80	80	67	2.79	1.60	71	0.044	90	100	179.2	0.26	2.89	15.4794273	122.9	176.8	155.7	52.5	175.4	178	65	63	67	0.031	1.001	24.116	2968		
340	52.011	53.542		0.12	0.16	1.33	1.05	0.36	80	81	67	2.78	1.60	71	0.044	79	100	179.1	0.07	2.91	15.4787626	122.4	176.4	155.2	52.5	174.9	175	65	64	67	0.030	1.001	24.276	2975		
341	52.125	53.701		0.11	0.16	1.33	1.05	0.36	80	81	67	2.78	1.60	72	0.045	73	99	178.8	0.32	2.83	15.4705219	122.0	175.9	155.0	52.5	174.5	173	65	64	67	0.030	1.001	23.626	2885		
342	52.317	53.861		0.19	0.16	1.34	1.06	0.36	80	80	67	2.78	1.60	71	0.044	124	100	179.0	-0.20	2.93	15.4999142	121.5	175.4	154.5	52.5	173.9	171	65	64	67	0.029	1.001	24.442	2973		
343	52.478	54.022		0.16	0.16	1.34	1.07	0.36	80	80	67	2.76	1.60	71	0.047	100	98	179.5	-0.44	2.91	15.4319324	121.1	175.0	154.1	52.5	173.5	169	65	64	67	0.029	1.001	24.273	2942		
344	52.640	54.182		0.16	0.16	1.34	1.07	0.36	80	80	67	2.75	1.60	71	0.048	100	96	179.5	-0.02	2.89	15.393383	120.5	174.5	153.7	52.5	173.0	167	65	64	67	0.028	1.001	24.121	2911		
345	52.802	54.343		0.16	0.16	1.34	1.07	0.36	80	80	67	2.75	1.60	71	0.044	104	101	179.3	0.20	2.87	15.499588	120.0	174.0	153.3	52.5	172.5	165	65	64	67	0.028	1.001	23.961	2880		
346	52.964	54.504		0.16	0.16	1.34	1.07	0.36	80	80	67	2.76	1.60	71	0.044	104	101	179.6	-0.32	2.87	15.5175915	119.6	173.5	152.9	52.5	172.0	163	65	64	67	0.027	1.001	23.961	2869		
347	53.033	54.666		0.07	0.16	1.35	1.07	0.36	80	80	67	2.74	1.60	71	0.046	43	99	179.8	-0.20	2.91	15.4994755	119.1	173.1	152.5	52.5	171.6	161	65	65	67	0.026	1.001	24.280	2896		
348	53.134	54.827		0.10	0.16	1.35	1.08	0.36	80	80	67	2.75	1.60	71	0.045	64	100	179.5	0.25	2.91	15.5848522	118.5	172.5	152.0	52.5	171.0	160	66	65	67	0.026	1.001	24.285	2882		
349	53.134	54.988		0.00	0.16	1.34	1.08	0.36	80	80	67	2.73	1.60	71	0.046	0	99	179.3	0.26	2.90	15.4520178	118.0	171.9	151.6	52.5	170.5	158	66	65	67	0.026	1.001	24.145	2853		
350	53.166	55.150		0.03	0.16	1.24	1.05	0.36	80	80	67	2.59	1.50	71	0.046	20	99	179.6	-0.31	2.93	15.4520769	117.5	171.5	151.3	52.5	170.0	156	66	65	67	0.025	1.001	24.462	2879		
351	53.226	55.308		0.06	0.16	1.24	1.05	0.36	80	80	67	2.58	1.50	71	0.047	37	96	178.8	0.80	2.89	15.4402657	117.3	171.2	151.0	52.5	169.7	155	66	65	67	0.024	1.001	24.113	2831		
352	53.339	55.467		0.11	0.16	1.25	1.05	0.36	80	80	67	2.58	1.50	71	0.046	71	98	178.9	-0.10	2.92	15.48242	116.4	170.4	150.2	52.5	168.9	153	66	65	67	0.024	1.001	24.339	2837		
353	53.379	55.626		0.04	0.16	1.32	1.04	0.36	80	80	67	2.66	1.50	71	0.048	25	95	179.6	-0.67	3.04	15.48985	116.0	170.0	149.9	52.5	168.4	152	66	65	67	0.024	1.001	25.318	2940		
354	53.390	55.785		0.01	0.16	1.33	1.04	0.36	80	80	67	2.68	1.50	71	0.044	7	100	180.6	-1.03	2.92	15.4793625	115.5	169.5	149.7	52.5	168.0	151	66	65	67	0.023	1.001	24.374	2819		
355	53.478	55.944		0.09	0.16	1.32	1.05	0.36	80	80	67	2.66	1.50	71	0.045	56	99	179.7	0.93	2.93	15.537055	115.2	169.2	149.3	52.5	167.6	150	66	65	67	0.023	1.001	24.441	2819		
356	53.568	56.103		0.09	0.16	1.33	1.04	0.36	80	80	67	2.68	1.50	71	0.046	57	98	179.6	0.10	2.87	15.4699497	114.6	168.5	148.7	52.5	167.0	147	66	65	67	0.023	1.001	23.960	2749		
357	53.580	56.262		0.01	0.16	1.33	1.05	0.36	80	80	67	2.65	1.50	71	0.046	8	98	179.8	-0.27	2.97	15.4995003	114.0	168.0	148.2	52.4	166.5	147	66	65	67	0.022	1.001	24.770	2828		
358	53.582	56.421		0.00	0.16	1.32	1.04	0.36	80	80	67	2.67	1.50	71	0.045	1	99	179.3	0.51	2.87	15.4028463	113.6	167.6	147.9	52.5	166.0	146	66	65	67	0.022	1.001	23.961	2725		
359	53.600	56.580		0.02	0.16	1.32	1.05	0.36	80	80	67	2.66	1.50	71	0.045	11	99	179.8	-0.49	2.83	15.4995356	113.2	167.2	147.6	52.5	165.6	145	66	65	67	0.022	1.001	23.628	2677		

Elapsed Time	Particulate Sampling Data																	Fuel Weight, lb		Flow, gpm		Temperature Data, oF														
	Gas Meter Cubic Feet (1)	Gas Meter Cubic Feet (2)	Gas Meter Cubic Feet (amb)	Sample Rate, cfm (1)	Sample Rate, cfm (2)	Orifice dH (1)	Orifice dH (2)	Orifice dH (amb)	Meter oF (1)	Meter oF (2)	Meter oF (amb)	Meter Vac. In. Hg. (1)	Meter Vac. In. Hg. (2)	Dilution Tunnel Temp.	Dilution Tunnel dP	Pro. Rate (%) (1)	Pro. Rate (%) (2)	Scale Reading	Weight Change	Load Side Liquid Flow Rate	Boiler Side Liquid Flow Rate (optional)	Thermopile ΔT	Boiler to Heat Exch. Temp.	Heat Exch to Boiler Temp.	Inlet Load Temp.	Outlet Load Temp.	Stack	Filter (1)	Filter (2)	Ambient	Stack Draft	Specific Heat of Inlet Water (BTU/lb-°F)	Mass Flow Rate of Inlet Water (lb/min)	Heat Output, Btu
360	53.600	56.738		0.00	0.16	1.33	1.04	0.36	80	80	67	2.66	1.50	71	0.046	0	97	179.3	0.58	2.93	15.4920969	112.7	166.5	147.2	52.4	165.1	144	66	65	67	0.021	1.001	24.435	2757
361	53.703	56.898		0.10	0.16	1.32	1.04	0.36	80	80	67	2.67	1.50	71	0.046	65	98	179.6	-0.40	2.87	15.4310102	112.2	166.1	146.7	52.4	164.6	142	66	65	67	0.021	1.001	23.961	2691
362	53.866	57.057		0.16	0.16	1.33	1.04	0.36	80	80	67	2.67	1.50	71	0.044	105	100	179.7	-0.02	2.87	15.540514	111.5	165.5	146.1	52.4	163.9	141	66	65	67	0.021	1.001	23.964	2675
363	53.975	57.216		0.11	0.16	1.33	1.05	0.36	80	80	67	2.67	1.50	71	0.044	70	100	179.7	-0.05	2.91	15.482049	111.1	164.9	145.8	52.4	163.5	141	66	65	67	0.021	1.001	24.288	2701
364	54.136	57.375		0.16	0.16	1.32	1.04	0.36	80	80	67	2.67	1.50	71	0.045	103	99	179.6	0.14	3.05	15.4520226	110.2	164.5	144.3	52.4	162.7	141	66	66	67	0.020	1.001	25.414	2805
365	54.297	57.533		0.16	0.16	1.32	1.05	0.36	80	80	67	2.66	1.50	71	0.046	101	97	179.2	0.35	3.11	15.4615297	109.8	164.0	143.8	52.4	162.2	139	66	66	67	0.020	1.001	25.909	2847
366	54.459	57.693		0.16	0.16	1.32	1.05	0.36	80	80	67	2.67	1.50	71	0.044	104	100	179.4	-0.14	3.11	15.4764843	109.2	163.4	143.4	52.4	161.6	139	66	66	67	0.020	1.001	25.895	2830
367	54.620	57.851		0.16	0.16	1.33	1.05	0.36	80	80	67	2.67	1.50	71	0.045	103	98	179.7	-0.31	3.02	15.4902878	108.7	162.9	142.9	52.4	161.1	138	66	66	67	0.019	1.001	25.165	2738
368	54.781	58.010		0.16	0.16	1.32	1.04	0.36	80	80	67	2.67	1.50	71	0.040	109	105	179.6	0.07	3.12	15.5464544	108.1	162.3	142.4	52.4	160.5	138	66	66	67	0.019	1.001	26.045	2819
369	54.942	58.170		0.16	0.16	1.31	1.03	0.36	80	80	67	2.70	1.60	87	0.044	105	102	179.7	-0.09	3.07	15.5080299	107.4	161.7	141.7	52.4	159.8	169	68	67	67	0.042	1.001	25.576	2750
370	55.106	58.327		0.16	0.16	1.31	1.03	0.36	80	80	67	2.70	1.60	90	0.047	104	97	177.9	1.81	3.11	15.4317904	106.9	161.2	141.1	52.4	159.3	203	69	67	67	0.041	1.001	25.938	2775
371	55.278	58.485		0.17	0.16	1.32	1.04	0.36	80	80	67	2.71	1.60	93	0.042	116	104	176.8	1.06	3.14	15.5569515	106.3	160.6	140.7	52.4	158.7	226	69	68	67	0.041	1.001	26.224	2792
372	55.438	58.642		0.16	0.16	1.32	1.03	0.36	80	80	67	2.71	1.60	96	0.045	104	100	175.5	1.35	3.14	15.5272274	106.4	160.8	140.9	52.4	158.8	243	69	68	67	0.045	1.001	26.216	2794
373	55.598	58.799		0.16	0.16	1.32	1.03	0.36	80	80	67	2.71	1.60	98	0.042	108	103	175.0	0.47	3.20	15.5088606	106.3	160.8	140.7	52.4	158.7	252	69	68	67	0.040	1.001	26.706	2844
374	55.757	58.957		0.16	0.16	1.32	1.03	0.36	80	80	67	2.69	1.60	100	0.043	106	103	173.4	1.63	3.22	15.4726563	106.1	160.7	140.1	52.4	158.5	259	69	68	67	0.048	1.001	26.866	2854
375	55.918	59.114		0.16	0.16	1.32	1.03	0.36	80	80	67	2.71	1.60	101	0.043	108	102	172.4	1.02	3.30	15.4228573	106.4	161.0	140.3	52.4	158.8	265	70	68	67	0.046	1.001	27.510	2932
376	56.078	59.272		0.16	0.16	1.32	1.03	0.36	80	80	67	2.71	1.60	103	0.045	105	101	172.4	-0.04	3.16	15.5175238	106.8	161.3	140.7	52.4	159.1	271	70	69	67	0.045	1.001	26.376	2819
377	56.237	59.428		0.16	0.16	1.32	1.04	0.36	80	80	67	2.71	1.60	104	0.041	109	104	172.0	0.44	3.28	15.3938885	107.3	161.7	141.0	52.4	159.7	273	71	69	67	0.049	1.001	27.353	2939
378	56.397	59.587		0.16	0.16	1.32	1.03	0.36	80	80	67	2.70	1.60	106	0.043	108	104	170.3	1.69	3.28	15.4795084	107.7	162.2	141.3	52.4	160.0	277	71	69	67	0.050	1.001	27.356	2949
379	56.557	59.743		0.16	0.16	1.32	1.03	0.36	80	80	67	2.72	1.60	107	0.046	104	99	169.7	0.57	3.18	15.5173388	108.4	162.9	141.9	52.4	160.7	282	72	70	67	0.049	1.001	26.544	2881
380	56.717	59.900		0.16	0.16	1.32	1.03	0.36	80	80	67	2.72	1.60	108	0.046	104	100	168.3	1.42	3.21	15.497983	109.0	163.5	142.4	52.3	161.3	286	72	70	67	0.053	1.001	26.789	2923
381	56.877	60.056		0.16	0.16	1.32	1.02	0.36	80	80	67	2.73	1.60	110	0.042	109	104	166.9	1.36	3.21	15.5283003	109.7	164.2	142.9	52.3	162.1	288	73	71	67	0.049	1.001	26.761	2940
382	57.037	60.213		0.16	0.16	1.32	1.02	0.36	80	80	67	2.72	1.60	110	0.042	109	104	165.8	1.18	3.28	15.5310783	110.4	165.0	143.5	52.3	162.8	291	74	71	67	0.050	1.001	27.357	3024
383	57.196	60.369		0.16	0.16	1.32	1.02	0.36	80	80	67	2.74	1.60	111	0.043	107	103	164.3	1.42	3.20	15.5190039	110.9	165.5	144.0	52.4	163.3	293	74	72	67	0.049	1.001	26.711	2967
384	57.356	60.525		0.16	0.16	1.31	1.02	0.36	80	80	67	2.73	1.60	112	0.044	107	102	163.2	1.11	3.20	15.4630651	111.7	166.2	144.5	52.3	164.1	296	75	72	67	0.055	1.001	26.701	2986
385	57.515	60.681		0.16	0.16	1.30	1.02	0.36	80	80	67	2.76	1.60	113	0.047	103	98	162.0	1.23	3.26	15.4987268	112.6	167.1	145.1	52.3	164.9	299	75	73	67	0.055	1.001	27.187	3064
386	57.673	60.837		0.16	0.16	1.31	1.02	0.36	80	80	67	2.76	1.60	113	0.044	106	102	161.2	0.82	3.28	15.461154	113.3	167.8	145.7	52.3	165.6	301	76	73	67	0.053	1.001	27.343	3101
387	57.832	60.992		0.16	0.15	1.30	1.01	0.36	80	80	67	2.75	1.60	114	0.044	106	101	159.5	1.71	3.14	15.5087528	114.1	168.7	146.5	52.3	166.5	303	76	74	67	0.051	1.001	26.212	2996
388	57.991	61.148		0.16	0.16	1.31	1.01	0.36	80	80	67	2.76	1.60	114	0.042	109	104	158.1	1.33	3.24	15.4840651	115.1	169.6	147.1	52.3	167.4	303	77	74	67	0.053	1.001	27.020	3114
389	58.149	61.303		0.16	0.15	1.30	1.00	0.36	80	80	67	2.77	1.70	114	0.045	105	100	156.9	1.18	3.24	15.4985828	116.0	170.5	147.9	52.3	168.3	304	77	74	67	0.052	1.001	27.029	3139
390	58.308	61.458		0.16	0.16	1.30	1.00	0.36	80	80	67	2.77	1.70	114	0.041	110	105	156.1	0.89	3.28	15.4318199	116.6	171.1	148.4	52.3	168.9	305	77	75	67	0.052	1.001	27.350	3192
391	58.467	61.611		0.16	0.15	1.30	0.99	0.36	80	80	67	2.78	1.70	114	0.045	105	99	154.6	1.44	3.28	15.4318733	117.4	171.9	149.0	52.3	169.8	305	78	75	67	0.056	1.001	27.356	3217
392	58.625	61.766		0.16	0.16	1.30	0.99	0.36	80	80	67	2.78	1.70	114	0.043	107	102	152.7	1.90	3.18	15.4953718	118.3	172.8	149.7	52.3	170.6	305	78	75	67	0.055	1.001	26.493	3137
393	58.784	61.920		0.16	0.15	1.29	0.99	0.36	80	80	67	2.78	1.70	114	0.045	105	99	151.8	0.90	3.24	15.4793243	119.1	173.6	150.5	52.3	171.4	306	78	75	67	0.053	1.001	27.034	3223
394	58.942	62.074		0.16	0.15	1.29	0.98	0.36	80	80	67	2.79	1.70	115	0.045	105	99	150.4	1.45	3.24	15.4792452	120.0	174.5	151.1	52.3	172.3	307	78	76	67	0.056	1.001	27.007	3244
395	59.099	62.227		0.16	0.15	1.29	0.99	0.36	80	80	67	2.79	1.70	115	0.041	109	103	148.9	1.51	3.27	15.4611692	120.9	175.3	151.7	52.3	173.2	308	79	76	67	0.055	1.001	27.246	3297
396	59.257	62.380		0.16	0.15	1.29	0.98	0.36	80	80	67	2.80	1.70	116	0.042	108	102	147.8	1.04	3.21	15.451932	121.7	176.3	152.3	52.3	174.1	310	79	76	67	0.053	1.001	26.809	3268
397	59.415	62.534		0.16	0.15	1.28	0.98	0.36	80	80	67	2.84	1.70	115	0.042	108	103	146.7	1.13	3.30	15.4890928	122.5	177.1	153.1	52.3	174.9	308	79	76	67	0.052	1.001	27.522	3377
398	59.573	62.686		0.16	0.15	1.28	0.97	0.36	80	80	67	2.83	1.70	114	0.038	114	107	144.7	2.00	3.26	15.4700413	123.3	177.9	153.8	52.3	175.7	307	79	77	67	0.055	1.001	27.193	3357
399	59.729	62.839		0.16	0.15	1.27	0.97	0.36	80	80	67	2.84	1.70	116	0.042	107	102	144.3	0.42	3.24	15.3994427	124.2	178.8	154.5	52.3	176.5	310	79	77	67	0.053	1.001	27.031	3361
400	59.886	62.992		0.16	0.15	1.28	0.97	0.36	80	80	67	2.84	1.70	116	0.041	109	104	142.2	2.03	3.32	15.4226789	125.0	179.6	155.1	52.3	177.3	312	79	77	67	0.054	1.001	27.675	3463
401	60.043	63.143		0.16	0.15	1.28	0.96	0.36	80	80	67	2.84	1.80	114	0.042	108	101	141.4	0.80	3.20	15.4997435	125.7	180.3	155.7	52.3	178.1	309	79	77	67	0.054	1.001	26.703	3361
402	60.200	63.295		0.16	0.15	1.28	1.00	0.36	80	80	67	2.84	1.80	115	0.042	108	102	140.3	1.13	3.16	15.46978	126.6	181.2	156.5	52.4	178.9	310	80	77	67	0.054	1.001	26.384	3344
403	60.357	63.450		0.16	0.16	1.28	1.00	0.36	80	80	67	2.84	1.80	115	0.042	108	104	139.1	1.22	3.20	15.4544611	127.4	182.0	157.3	52.3	179.8	312	80	77	67	0.054	1.001	26.703	3406
404	60.514	63.604		0.16	0.15	1.27	0.99	0.36	80	80	67	2.84	1.80	114	0.040	110	105	137.9	1.17	3.30	15.393404	128.4	182.9	158.1	52.3	180.8	309	80	77	67	0.053	1.001	27.514	3538
405	60.671	63.758		0.16	0.15	1.28	0.95	0.36	80	80	67	2.83	2.00	102	0.044	104	99	136.7	1.19	3.21	15.4901009	129.2	183.7	158.7	52.3	181.6	297	79	76	67	0.042	1.001	26.738	3459
406	60.831	63.912		0.16	0.15	1.33	0.98	0.36	80	80	67	2.89	2.10	90	0.043	106	99	135.7	1.01	3.20	15.4993982	129.6	184.1	159.1	52.3	181.9	269	77	76	67	0.041	1.001	26.669	3461
407	60.991	64.069		0.16	0.16	1.33	1.04	0.36	80	80	67	2.89	1.90	86	0.043	106	101	135.1	0.61	3.13	15.4230356	129.6	184.0	159.1	52.3	181.9	253	76	75	67	0.041	1.001	26.140	3391
408	61.152	64.227		0.16	0.16	1.33	1.05	0.36	80	80	67	2.88	1.90	84	0.045	104	99	134.9	0.22	3.15	15.4319077	129.6	184.0	159.1	52.3	181.9	242	75	74	67	0.039	1.001	26.229	3402
409	61.312	64.386		0.16	0.16	1.33	1.05	0.36	80	80	67	2.88	1.90	82	0.046	102	99	134.6	0.25	3.18	15.4521103	129.5	184.0	159.0	52.3	181.9	235	75	74	67	0.038	1.001	26.547	3443
410	61.473	64.546		0.16	0.16	1.33	1.05	0.36	80	80	67	2.87	1.90	78	0.044	104	101	134.0	0.61	3.18	15.4749517	129.6	184.1	159.1	52.3	181.9	229	74	73	67	0.041	1.001	26.551	3445
411	61.634	64.704		0.16	0.16	1.33	1.05	0.36	80	80	67	2.88	1.90	77	0.047	101	96	133.5	0.53	3.13	15.459691	129.3	183.8	158.8	52.3	181.6	224	74	72	67	0.039	1.001	26.060	3373
412	61.795	64.864		0.16	0.16	1.33	1.05	0.36	80	80	67	2.86	1.90	76	0.042	107	103	133.3	0.19	3.16	15.4227381	129.1	183.5	158.7	52.3	181.4	219	73	71	67	0.038	1.001	26.381	3409
413	61.956	65.023		0.16	0.16	1.33	1.05	0.36	80	80	67	2.87	1.90	76	0.046	102	98	133.1	0.21	3.18	15.461483	128.9	183.4	158.6	52.3	181.2	216	72	71	67	0.038	1.001	26.547	3426
414	62.117	65.182		0.16	0.16	1.33	1.05	0.36	80	80	67	2.87	1.90	75	0.041	108	104	133.2	-0.15	3.10	15.3262167	128.5	183.0	158.3	52.3	180.8	212	72	70	67	0.037	1.001	25.893	3331
415	62.278	65.343		0.16	0.16	1.33	1.05	0.36	80	80	67	2.87	1.90	74	0.045	103	100	133.2	0.07	3.22	15.355794	128.0	182.4	157.9	52.3	180.3	211	71	69	67	0.036	1.001	26.866	3444
416	62.439	65.502		0.16	0.16	1.34	1.05	0.36	80	80	67	2.85	1.90	73	0.046	102	98	133.1	0.06	3.26	15.4413271	127.7	182.1	157.6	52.3	180.0	211	70	68	67	0.037	1.001	27.195	3476
417	62.601	65.661		0.16	0.16	1.34	1.06	0.36	80	80	67	2.86	1.90	72	0.045	103	99	133.1	-0.04	3.30	15.4795742	127.2	181.6	157.2	52.3	179.5	209	69	68	67	0.040	1.001	27.511	3503
418	62.762	65.822		0.16	0.16	1.34	1.06	0.36	80	80	67	2.85	1.90	72	0.044	104	101	132.7	0.40	3.24	15.4949474	126.9	181.4	156.9	52.3	179.2	207	69	67	67	0.040	1.001	27.030	3433
419	62.924	65.982		0.16	0.16	1.34	1.06	0.36	80	80	67	2.84	1.90	72	0.045	103	99	132.8	-0.04	3.26	15.4228144	126.4	181.0	156.6	52.3	178.8	205	68	66	67	0.040	1.001	27.191	3442
420	63.089	66.142		0.16	0.16	1.34	1.07	0.36	80	80	67	2.83	1.80	72	0.045	105	99	133.0	-0.25	3.21	15.4319029	125.9	180.4	156.3	52.3	178.3	202	68	66	67	0.039	1.001	26.783	3377
421	63.264	66.303		0.18	0.16	1.35	1.07	0.36	80	80	67	2.83	1.80	72	0.044	113	101	133.1	-0.05	3.22	15.3933792	125.6	180.0	156.0	52.3	177.9	200	67	65	67	0.039	1.001	26.871	3378

Elapsed Time	Particulate Sampling Data																	Fuel Weight, lb		Flow, gpm		Temperature Data, oF													
	Gas Meter Cubic Feet (1)	Gas Meter Cubic Feet (2)	Gas Meter Cubic Feet (amb)	Sample Rate, cfm (1)	Sample Rate, cfm (2)	Orifice dH (1)	Orifice dH (2)	Orifice dH (amb)	Meter oF (1)	Meter oF (2)	Meter oF (amb)	Meter Vac. In. Hg. (1)	Meter Vac. In. Hg. (2)	Dilution Tunnel Temp.	Dilution Tunnel dP	Pro. Rate (%) (1)	Pro. Rate (%) (2)	Scale Reading	Weight Change	Load Side Liquid Flow Rate	Boiler Side Liquid Flow Rate (optional)	Thermopile ΔT	Boiler to Heat Exch. Temp.	Heat Exch to Boiler Temp.	Inlet Load Temp.	Outlet Load Temp.	Stack	Filter (1)	Filter (2)	Ambient	Stack Draft	Specific Heat of Inlet Water (BTU/lb-°F)	Mass Flow Rate of Inlet Water (lb/min)	Heat Output, Btu	
422	63.381	66.464		0.12	0.16	1.35	1.07	0.36	80	80	67	2.83	1.80	72	0.044	75	101	132.6	0.50	3.24	15.5080814	125.0	179.4	155.4	52.3	177.3	197	67	65	67	0.038	1.001	27.004	3379	
423	63.538	66.625		0.16	0.16	1.36	1.07	0.36	80	80	67	2.82	1.80	72	0.045	100	100	132.6	0.02	3.20	15.4697895	124.8	179.1	155.5	52.3	177.2	194	66	65	67	0.037	1.001	26.704	3338	
424	63.700	66.787		0.16	0.16	1.35	1.08	0.36	80	80	67	2.81	1.80	72	0.044	104	102	133.0	-0.44	3.22	15.4793959	124.3	178.5	155.1	52.3	176.6	191	66	64	67	0.036	1.001	26.861	3343	
425	63.873	66.948		0.17	0.16	1.35	1.05	0.36	80	80	67	2.80	1.70	72	0.043	113	102	132.7	0.30	3.13	15.4132996	123.8	178.0	154.8	52.3	176.1	189	66	64	67	0.035	1.001	26.060	3229	
426	64.036	67.106		0.16	0.16	1.35	1.05	0.36	80	80	67	2.80	1.70	72	0.045	104	98	133.0	-0.34	3.22	15.4028254	123.3	177.6	154.3	52.3	175.6	186	66	64	67	0.033	1.001	26.871	3317	
427	64.200	67.266		0.16	0.16	1.36	1.06	0.36	80	80	67	2.78	1.70	72	0.044	106	100	132.8	0.27	3.18	15.5241652	122.7	177.0	153.9	52.3	175.0	183	66	64	67	0.033	1.001	26.545	3260	
428	64.369	67.427		0.17	0.16	1.28	1.06	0.36	80	80	67	2.69	1.70	72	0.045	108	100	133.2	-0.39	3.11	15.5566359	122.2	176.5	153.5	52.3	174.5	181	66	65	67	0.032	1.001	25.899	3168	
429	64.527	67.587		0.16	0.16	1.28	1.08	0.36	80	80	67	2.67	1.70	72	0.043	103	102	133.2	0.00	3.16	15.4318447	121.7	176.0	153.0	52.3	174.0	178	66	65	67	0.031	1.001	26.388	3214	
430	64.685	67.743		0.16	0.16	1.27	0.99	0.36	80	80	67	2.67	1.50	71	0.045	101	97	132.8	0.36	3.07	15.4517565	121.1	175.4	152.7	52.3	173.4	176	66	65	67	0.030	1.001	25.572	3100	
431	64.843	67.898		0.16	0.16	1.28	1.00	0.36	80	80	67	2.67	1.50	71	0.045	101	96	133.1	-0.32	3.16	15.4354706	120.6	175.0	152.3	52.3	172.9	174	67	65	67	0.029	1.001	26.366	3182	
432	65.002	68.054		0.16	0.16	1.28	1.00	0.36	80	80	67	2.66	1.50	71	0.043	104	99	132.8	0.32	3.18	15.4609194	119.9	174.3	151.8	52.3	172.3	172	67	65	67	0.029	1.001	26.536	3187	
433	65.130	68.209		0.13	0.16	1.28	1.01	0.36	80	80	67	2.67	1.50	71	0.043	83	98	133.3	-0.53	3.01	15.3711681	119.6	174.0	151.5	52.3	171.9	170	67	66	67	0.028	1.001	25.090	3004	
434	65.136	68.365		0.01	0.16	1.29	1.01	0.36	80	80	67	2.65	1.50	71	0.045	4	97	133.3	0.06	3.18	15.5464973	118.8	173.2	150.9	52.3	171.2	168	67	66	67	0.027	1.001	26.549	3159	
435	65.147	68.521		0.01	0.16	1.28	1.01	0.36	80	80	67	2.65	1.50	71	0.043	7	99	133.2	0.06	3.20	15.4996328	118.4	172.8	150.5	52.3	170.7	166	67	66	67	0.026	1.001	26.711	3166	
436	65.280	68.677		0.13	0.16	1.29	1.01	0.36	80	80	67	2.65	1.50	71	0.045	85	97	133.1	0.09	3.07	15.4260998	118.0	172.3	150.1	52.3	170.4	163	67	66	67	0.026	1.001	25.571	3022	
437	65.373	68.834		0.09	0.16	1.28	1.01	0.36	80	80	67	2.64	1.50	71	0.046	59	96	133.3	-0.13	3.14	15.5175257	117.4	171.8	149.6	52.3	169.7	161	67	66	67	0.026	1.001	26.223	3082	
438	65.460	68.990		0.09	0.16	1.29	1.01	0.36	80	80	67	2.64	1.50	72	0.044	56	98	133.2	0.10	3.15	15.42027	116.8	171.2	149.2	52.4	169.2	160	67	66	67	0.025	1.001	26.227	3068	
439	65.618	69.146		0.16	0.16	1.29	1.01	0.36	80	80	67	2.64	1.50	71	0.044	102	98	133.1	0.10	3.14	15.4573345	116.3	170.6	148.8	52.3	168.6	158	67	66	67	0.024	1.001	26.225	3053	
440	65.778	69.302		0.16	0.16	1.29	1.01	0.36	80	80	67	2.63	1.50	71	0.044	103	98	133.0	0.02	3.14	15.502553	115.8	170.1	148.3	52.3	168.1	157	67	66	67	0.024	1.001	26.222	3040	
441	65.925	69.459		0.15	0.16	1.29	1.01	0.36	80	80	67	2.63	1.50	71	0.043	96	100	132.8	0.21	3.09	15.5034618	115.3	169.7	148.0	52.3	167.7	155	67	66	67	0.023	1.001	25.740	2972	
442	65.988	69.615		0.06	0.16	1.29	1.01	0.36	80	80	67	2.64	1.50	71	0.047	39	95	133.2	-0.38	3.11	15.432004	114.7	169.1	147.4	52.3	167.1	153	67	66	67	0.023	1.001	25.903	2975	
443	66.126	69.772		0.14	0.16	1.29	1.01	0.36	80	80	67	2.63	1.50	71	0.046	87	96	133.1	0.04	3.15	15.5081015	114.2	168.5	147.0	52.3	166.5	151	67	66	67	0.022	1.001	26.234	2999	
444	66.285	69.928		0.16	0.16	1.29	1.01	0.36	80	80	67	2.63	1.50	71	0.043	104	99	133.0	0.10	3.11	15.4230623	113.8	168.1	146.7	52.3	166.1	150	67	66	67	0.022	1.001	25.906	2952	
445	66.441	70.085		0.16	0.16	1.29	1.01	0.36	80	80	67	2.63	1.50	71	0.045	99	97	133.5	-0.43	3.15	15.3993549	113.1	167.4	146.1	52.3	165.4	148	67	66	67	0.018	1.001	26.262	2974	
446	66.600	70.241		0.16	0.16	1.29	1.01	0.36	80	80	67	2.64	1.50	71	0.042	105	100	133.0	0.45	3.13	15.4612961	112.6	166.9	145.7	52.3	164.9	146	67	66	67	0.021	1.001	26.061	2938	
447	66.721	70.398		0.12	0.16	1.29	1.01	0.36	80	80	67	2.64	1.50	71	0.049	74	93	133.3	-0.31	3.15	15.5082169	112.1	166.4	145.3	52.3	164.4	145	67	66	67	0.021	1.001	26.234	2945	
448	66.880	70.554		0.16	0.16	1.29	1.01	0.36	80	80	67	2.64	1.50	71	0.044	102	98	133.0	0.29	3.07	15.479516	111.6	165.9	144.9	52.3	163.9	143	67	66	67	0.020	1.001	25.640	2864	
449	67.025	70.711		0.15	0.16	1.29	1.01	0.36	80	80	67	2.64	1.50	71	0.044	93	98	133.0	0.00	3.11	15.4131441	110.9	165.3	144.3	52.4	163.3	142	67	66	67	0.020	1.001	25.909	2877	
450	67.184	70.866		0.16	0.16	1.29	1.01	0.36	80	80	67	2.63	1.50	71	0.043	104	98	133.3	-0.30	3.05	15.4698191	110.4	164.7	143.9	52.3	162.7	141	67	66	67	0.020	1.001	25.414	2809	
451	67.342	71.023		0.16	0.16	1.29	1.01	0.36	80	80	67	2.64	1.50	71	0.046	100	96	133.1	0.24	3.13	15.5666819	110.0	164.3	143.5	52.3	162.3	140	67	66	67	0.019	1.001	26.073	2871	
452	67.501	71.179		0.16	0.16	1.29	1.01	0.36	80	80	67	2.64	1.50	71	0.045	101	97	133.2	-0.13	3.24	15.4795265	109.4	163.7	143.0	52.3	161.7	138	67	66	67	0.019	1.001	27.042	2962	
453	67.634	71.336		0.13	0.16	1.28	1.00	0.36	80	80	67	2.64	1.50	71	0.043	87	100	133.2	0.00	3.16	15.4407883	108.7	163.1	142.4	52.3	161.0	137	67	66	67	0.018	1.001	26.392	2873	
454	67.765	71.492		0.13	0.16	1.29	1.01	0.36	80	80	67	2.63	1.50	71	0.045	83	97	133.1	0.18	3.17	15.4894104	108.3	162.7	142.2	52.3	160.7	136	67	66	67	0.018	1.001	26.397	2863	
455	67.892	71.649		0.13	0.16	1.29	1.01	0.36	80	80	67	2.64	1.50	71	0.042	84	101	133.2	-0.09	3.15	15.4993896	107.7	162.0	141.7	52.3	160.1	135	67	66	67	0.017	1.001	26.233	2830	
456	68.051	71.804		0.16	0.16	1.28	1.00	0.36	80	80	67	2.66	1.50	83	0.046	101	96	132.9	0.25	3.20	15.5369921	107.3	161.7	141.3	52.3	159.7	157	67	67	67	0.041	1.001	26.712	2871	
457	68.202	71.961		0.15	0.16	1.29	1.00	0.36	80	80	67	2.66	1.50	89	0.044	99	100	131.9	0.96	3.09	15.3265324	106.7	161.1	140.9	52.3	159.1	200	69	67	67	0.039	1.001	25.746	2751	
458	68.336	72.115		0.13	0.15	1.29	1.01	0.36	80	80	67	2.68	1.50	93	0.046	86	96	130.9	1.05	3.13	15.4232922	106.2	160.5	140.4	52.3	158.5	227	70	68	67	0.046	1.001	26.074	2772	
459	68.494	72.271		0.16	0.16	1.29	1.00	0.36	80	80	67	2.67	1.60	97	0.044	104	100	129.7	1.16	3.10	15.4898548	106.3	160.7	140.5	52.3	158.6	247	70	68	67	0.048	1.001	25.892	2756	
460	68.652	72.425		0.16	0.15	1.29	1.00	0.36	80	80	67	2.66	1.60	100	0.046	102	97	128.6	1.10	3.09	15.413537	106.4	160.8	140.6	52.3	158.8	259	70	68	67	0.044	1.001	25.754	2745	
461	68.679	72.580		0.03	0.16	1.29	1.00	0.36	80	80	67	2.66	1.60	102	0.046	17	98	127.3	1.29	3.32	15.3846264	106.5	160.9	140.5	52.3	158.8	268	70	69	67	0.044	1.001	27.707	2953	
462	68.739	72.735		0.06	0.16	1.28	1.00	0.36	80	80	67	2.67	1.60	104	0.043	40	101	126.4	0.94	3.17	15.5009308	106.7	161.1	140.6	52.3	159.1	275	71	69	67	0.049	1.001	26.438	2825	
463	68.820	72.889		0.08	0.15	1.29	0.99	0.36	80	80	67	2.67	1.60	106	0.044	54	100	125.4	1.04	3.13	15.4027872	107.1	161.6	141.0	52.3	159.5	281	71	69	67	0.052	1.001	26.068	2797	
464	68.968	73.043		0.15	0.15	1.29	1.00	0.36	80	80	67	2.67	1.60	107	0.044	98	100	124.1	1.30	3.24	15.53127	107.9	162.3	141.6	52.3	160.2	284	72	70	67	0.048	1.001	27.035	2921	
465	69.126	73.198		0.16	0.15	1.29	0.99	0.36	80	80	67	2.68	1.60	108	0.043	106	102	123.5	0.55	3.15	15.4790783	108.8	163.3	142.4	52.3	161.2	286	72	70	67	0.052	1.001	26.232	2858	
466	69.283	73.352		0.16	0.15	1.29	0.99	0.36	80	80	67	2.70	1.60	109	0.041	108	104	121.5	1.96	3.18	15.4518061	109.4	163.8	142.8	52.3	161.7	289	73	71	67	0.049	1.001	26.558	2908	
467	69.421	73.505		0.14	0.15	1.29	0.99	0.36	80	80	67	2.70	1.60	111	0.044	92	100	120.4	1.14	3.20	15.4698954	110.2	164.6	143.5	52.3	162.5	293	74	71	67	0.054	1.001	26.721	2947	
468	69.581	73.660		0.16	0.16	1.27	0.98	0.36	80	80	67	2.70	1.60	110	0.042	109	103	119.5	0.92	3.22	15.4407997	111.0	165.5	144.1	52.4	163.3	293	74	72	67	0.050	1.001	26.874	2986	
469	69.739	73.813		0.16	0.15	1.27	0.98	0.36	80	80	67	2.71	1.60	111	0.043	107	101	117.8	1.69	3.26	15.5083475	111.5	166.0	144.5	52.3	163.8	294	75	72	67	0.047	1.001	27.206	3037	
470	69.898	73.966		0.16	0.15	1.28	0.97	0.36	80	80	67	2.71	1.60	110	0.044	106	99	116.6	1.22	3.24	15.489974	112.6	167.1	145.3	52.3	164.9	294	75	73	67	0.052	1.001	27.035	3048	
471	70.056	74.119		0.16	0.15	1.28	0.98	0.36	80	80	67	2.71	1.60	112	0.040	111	104	115.3	1.27	3.18	15.5753136	113.5	168.1	146.1	52.3	165.8	297	75	73	67	0.056	1.001	26.549	3017	
472	70.214	74.271		0.16	0.15	1.28	0.98	0.36	80	80	67	2.71	1.60	112	0.039	112	105	114.2	1.15	3.30	15.5172491	114.3	168.9	146.8	52.3	166.6	297	76	73	67	0.052	1.001	27.517	3149	
473	70.370	74.425		0.16	0.15	1.27	0.97	0.36	80	80	67	2.71	1.60	112	0.044	104	100	112.6	1.53	3.24	15.4416971	115.0	169.6	147.4	52.3	167.4	298	76	74	67	0.053	1.001	27.037	3114	
474	70.527	74.577		0.16	0.15	1.27	0.97	0.36	80	80	67	2.72	1.60	112	0.039	111	105	112.4	0.19	3.22	15.4901409	116.0	170.5	148.1	52.3	168.3	300	77	74	67	0.056	1.001	26.831	3115	
475	70.684	74.729		0.16	0.15	1.28	0.97	0.36	80	80	67	2.72	1.60	113	0.045	104	98	110.3	2.13	3.21	15.3918867	116.9	171.5	148.8	52.3	169.2	300	77	74	67	0.054	1.001	26.756	3132	
476	70.841	74.882		0.16	0.15	1.27	0.96	0.36	80	80	67	2.74	1.60	113	0.042	108	102	109.7	0.63	3.16	15.3646688	117.7	172.1	149.4	52.3	170.0	302	77	75	67	0.057	1.001	26.330	3102	
477	70.998	75.033		0.16	0.15	1.27	0.96	0.36	80	80	67	2.74	1.70	113	0.042	108	101	108.0	1.62	3.28	15.3846598	118.6	173.1	150.2	52.3	171.0	303	77	75	67	0.050	1.001	27.357	3249	
478	71.155	75.186		0.16	0.15	1.33	1.00	0.36	80	80	67	2.83	1.70	112	0.041	109	103	107.1	0.94	3.16	15.4990225	119.8	174.3	151.1	52.3	172.1	302	78	75	67	0.058	1.001	26.388	3165	
479	71.316	75.341		0.16	0.15	1.33	1.00	0.36	80	80	67	2.84	1.70	112	0.045	106	100	106.1	1.02	3.18	15.4793806	120.4	174.8	151.7	52.3	172.7	302	78	75	67	0.050	1.001	26.554	3201	
480	71.476	75.494		0.16	0.15	1.33	1.00	0.36	80	80	67	2.85	1.70	111	0.043	108	101	104.5	1.55	3.20	15.470089	121.3	175.8	152.6	52.4	173.7	299	78	75	67	0.049	1.001	26.717	3246	
481	71.636	75.649		0.16	0.16	1.33	1.00	0.36	80	80	67	2.86	1.70	113	0.039	114	107	104.2	0.31	3.24	15.4117613	122.1	176.5	153.2	52.4	174.4	303	78	76	67	0.056	1.001	27.029	3304	
482	71.787	75.803		0.15	0.15	1.33	1.00	0.36	80	80	67	2.85	1.70	112	0.043	102	101	102.0	2.27	3.26	15.4519777	122.9	177.4	154.0	52.3	175.2	303	78	76	67	0.050	1.001	27.196	3346	
483	71.939	75.958		0.15	0.16	1.33	0.99	0.36	80	80	67	2.86	1.70	111	0.045	100	100	100.3	1.67	3.13	15.4317474	123.8	178.3	154.7	52.4	176.1	302	78	76	67	0.055	1.001	26.072	3230	

Elapsed Time	Particulate Sampling Data																	Fuel Weight, lb		Flow, gpm		Temperature Data, oF												
	Gas Meter Cubic Feet (1)	Gas Meter Cubic Feet (2)	Gas Meter Cubic Feet (amb)	Sample Rate, cfm (1)	Sample Rate, cfm (2)	Orifice dH (1)	Orifice dH (2)	Orifice dH (amb)	Meter oF (1)	Meter oF (2)	Meter oF (amb)	Meter Vac. In. Hg. (1)	Meter Vac. In. Hg. (2)	Dilution Tunnel Temp.	Dilution Tunnel dP	Pro. Rate (%) (1)	Pro. Rate (%) (2)	Scale Reading	Weight Change	Load Side Liquid Flow Rate	Boiler Side Liquid Flow Rate (optional)	Thermopile ΔT	Boiler to Heat Exch. Temp.	Heat Exch to Boiler Temp.	Inlet Load Temp.	Outlet Load Temp.	Stack	Filter (1)	Filter (2)	Ambient	Stack Draft	Specific Heat of Inlet Water (BTU/lb-°F)	Mass Flow Rate of Inlet Water (lb/min)	Heat Output, Btu
484	72.100	76.112		0.16	0.15	1.32	0.99	0.36	80	80	67	2.87	1.80	113	0.042	110	103	99.5	0.75	3.22	15.4699087	124.4	178.8	155.1	52.3	176.7	304	78	76	67	0.055	1.001	26.874	3346
485	72.259	76.266		0.16	0.15	1.32	0.99	0.36	80	80	67	2.87	1.80	114	0.041	110	104	98.3	1.23	3.18	15.3365288	125.3	179.7	155.9	52.4	177.6	306	78	76	67	0.055	1.001	26.543	3329
486	72.419	76.420		0.16	0.15	1.32	0.99	0.36	80	80	67	2.90	1.80	114	0.046	105	98	97.9	0.39	3.18	15.4133768	126.5	181.0	156.8	52.4	178.8	307	78	76	67	0.055	1.001	26.545	3361
487	72.576	76.573		0.16	0.15	1.32	0.99	0.36	80	80	67	2.91	1.80	114	0.044	105	100	96.0	1.90	3.19	15.3934708	127.1	181.6	157.3	52.3	179.5	308	78	76	67	0.052	1.001	26.635	3390
488	72.736	76.727		0.16	0.15	1.33	0.98	0.36	80	80	67	2.88	1.80	114	0.040	112	105	94.6	1.37	3.14	15.4855614	128.0	182.5	157.9	52.3	180.3	309	78	76	67	0.052	1.001	26.155	3352
489	72.896	76.879		0.16	0.15	1.31	0.98	0.36	80	80	67	2.91	1.80	115	0.044	107	99	93.5	1.15	3.18	15.4143457	128.8	183.3	158.6	52.4	181.2	311	79	76	67	0.053	1.001	26.554	3425
490	73.055	77.033		0.16	0.15	1.31	0.98	0.36	80	80	67	2.89	1.80	91	0.047	101	95	92.7	0.76	3.13	15.4279413	129.5	184.0	159.3	52.4	181.9	279	76	75	67	0.042	1.001	26.061	3380
491	73.216	77.187		0.16	0.15	1.31	0.98	0.36	80	80	67	2.88	1.80	85	0.044	105	98	92.0	0.75	3.24	15.3933296	129.7	184.2	159.5	52.4	182.1	257	75	74	67	0.039	1.001	27.035	3512
492	73.378	77.339		0.16	0.15	1.32	0.97	0.36	80	80	67	2.86	1.80	82	0.045	104	95	92.2	-0.19	3.11	15.4028435	129.8	184.3	159.5	52.4	182.1	245	75	74	67	0.040	1.001	25.909	3367
493	73.538	77.493		0.16	0.15	1.31	0.97	0.36	80	80	67	2.87	1.80	80	0.045	103	96	91.7	0.47	3.16	15.4613638	129.6	184.0	159.3	52.3	182.0	236	74	73	67	0.039	1.001	26.389	3425
494	73.698	77.646		0.16	0.15	1.32	0.98	0.36	80	80	67	2.86	1.80	78	0.045	103	96	91.3	0.43	3.16	15.384696	129.5	184.0	159.2	52.4	181.8	230	74	72	67	0.037	1.001	26.391	3421
495	73.858	77.799		0.16	0.15	1.32	0.97	0.36	80	80	67	2.84	1.80	77	0.044	104	97	90.9	0.38	3.16	15.3752689	129.3	183.7	159.1	52.4	181.6	225	73	71	67	0.038	1.001	26.391	3416
496	74.019	77.953		0.16	0.15	1.32	0.97	0.36	80	80	67	2.86	1.80	76	0.043	105	98	90.8	0.13	3.09	15.5285368	129.2	183.3	159.3	52.3	181.6	221	72	71	67	0.037	1.001	25.737	3330
497	74.179	78.106		0.16	0.15	1.32	0.98	0.36	80	80	67	2.86	1.80	75	0.044	103	96	91.4	-0.65	3.07	15.4980803	129.0	183.1	159.2	52.3	181.3	217	72	70	67	0.037	1.001	25.586	3305
498	74.340	78.260		0.16	0.15	1.33	0.97	0.36	80	80	67	2.83	1.80	75	0.046	102	95	91.3	0.14	3.11	15.4792452	128.7	182.9	159.1	52.4	181.0	214	71	69	67	0.036	1.001	25.907	3338
499	74.501	78.413		0.16	0.15	1.33	0.97	0.36	80	80	67	2.83	1.80	75	0.046	102	94	90.8	0.42	3.14	15.4614716	128.3	182.4	158.7	52.3	180.6	211	70	69	67	0.035	1.001	26.148	3359
500	74.661	78.567		0.16	0.15	1.33	0.98	0.36	80	80	67	2.83	1.70	73	0.044	103	97	90.9	-0.05	3.05	15.4577866	127.6	181.8	158.1	52.4	180.0	211	70	68	67	0.035	1.001	25.428	3249
501	74.822	78.722		0.16	0.16	1.33	0.99	0.36	80	80	67	2.82	1.70	73	0.042	106	100	90.8	0.05	3.09	15.4132957	127.5	181.8	158.0	52.4	179.9	210	69	67	67	0.035	1.001	25.736	3285
502	74.983	78.876		0.16	0.15	1.33	0.99	0.36	80	80	67	2.83	1.70	73	0.049	98	92	90.7	0.17	3.15	15.4702082	127.0	181.2	157.7	52.4	179.4	208	68	67	67	0.037	1.001	26.231	3335
503	75.145	79.031		0.16	0.16	1.34	0.99	0.36	80	80	67	2.82	1.70	72	0.046	102	95	90.4	0.25	3.18	15.5175867	126.7	180.9	157.4	52.4	179.0	206	68	66	67	0.037	1.001	26.506	3362
504	75.306	79.185		0.16	0.15	1.33	0.99	0.36	80	80	67	2.81	1.70	72	0.044	104	97	90.2	0.24	3.07	15.3934326	126.2	180.5	157.1	52.3	178.5	203	67	65	67	0.037	1.001	25.586	3233
505	75.468	79.340		0.16	0.16	1.33	0.99	0.36	80	80	67	2.80	1.70	72	0.045	103	96	90.3	-0.13	3.19	15.4611902	125.8	180.0	156.8	52.4	178.2	200	67	65	67	0.037	1.001	26.561	3345
506	75.629	79.495		0.16	0.16	1.34	1.00	0.36	80	80	67	2.81	1.70	72	0.044	104	97	91.0	-0.72	2.93	15.3758144	125.7	179.6	157.3	52.4	178.0	197	67	65	67	0.036	1.001	24.455	3077
507	75.791	79.651		0.16	0.16	1.34	0.99	0.36	80	80	67	2.79	1.70	72	0.045	103	97	91.2	-0.20	2.97	15.4192896	125.2	179.2	156.9	52.4	177.6	195	67	64	67	0.036	1.001	24.779	3107
508	75.953	79.806		0.16	0.16	1.35	1.00	0.36	80	80	67	2.79	1.70	72	0.045	103	96	91.1	0.16	2.80	15.4900169	125.0	178.9	157.1	52.4	177.3	192	67	65	67	0.034	1.001	23.319	2918
509	76.114	79.962		0.16	0.16	1.35	1.00	0.36	80	80	67	2.77	1.70	72	0.045	103	97	90.6	0.47	2.99	15.3847141	124.5	178.4	156.4	52.4	176.9	189	67	65	67	0.035	1.001	24.939	3108
510	76.276	80.118		0.16	0.16	1.35	1.01	0.36	80	80	67	2.78	1.70	72	0.046	102	96	90.7	-0.07	3.11	15.4613562	123.8	177.7	155.6	52.4	176.2	187	67	65	67	0.033	1.001	25.898	3209
511	76.439	80.274		0.16	0.16	1.35	1.01	0.36	80	80	67	2.78	1.70	72	0.043	106	99	90.9	-0.24	2.93	15.3557692	123.4	177.5	155.4	52.4	175.8	184	67	66	67	0.032	1.001	24.459	3022
512	76.601	80.431		0.16	0.16	1.36	1.02	0.36	80	80	67	2.78	1.70	72	0.041	108	102	90.9	0.03	2.95	15.4672585	123.0	177.0	155.1	52.4	175.4	182	67	66	67	0.031	1.001	24.619	3031
513	76.763	80.589		0.16	0.16	1.35	1.02	0.36	80	80	67	2.78	1.60	72	0.045	103	98	91.0	-0.14	2.95	15.4230556	122.5	176.6	154.7	52.4	174.9	179	67	66	67	0.031	1.001	24.628	3021
514	76.926	80.746		0.16	0.16	1.35	1.02	0.36	80	80	67	2.76	1.60	72	0.044	105	99	91.4	-0.34	3.05	15.4899902	122.0	176.1	154.2	52.4	174.4	177	67	66	67	0.030	1.001	25.425	3105
515	77.088	80.904		0.16	0.16	1.35	1.03	0.36	80	80	67	2.75	1.60	72	0.047	101	96	90.6	0.75	3.02	15.4135618	121.4	175.5	153.7	52.4	173.8	175	67	66	67	0.029	1.001	25.154	3057
516	77.251	81.061		0.16	0.16	1.35	1.03	0.36	80	80	67	2.74	1.60	71	0.045	104	97	90.7	-0.13	2.95	15.4230576	121.0	175.1	153.4	52.4	173.4	173	67	66	67	0.029	1.001	24.594	2980
517	77.419	81.219		0.17	0.16	1.36	1.03	0.36	80	80	67	2.74	1.60	71	0.047	105	96	90.9	-0.13	3.03	15.4409266	120.3	174.4	152.9	52.4	172.7	170	67	66	67	0.028	1.001	25.290	3047
518	77.583	81.377		0.16	0.16	1.36	1.04	0.36	80	80	67	2.73	1.60	71	0.044	106	99	90.8	0.09	3.04	15.5235653	119.9	174.0	152.6	52.4	172.3	168	67	66	67	0.027	1.001	25.346	3042
519	77.749	81.535		0.17	0.16	1.36	1.04	0.36	80	80	67	2.73	1.60	71	0.042	109	101	91.0	-0.21	2.91	15.4517431	119.4	173.4	152.1	52.4	171.7	166	67	66	67	0.026	1.001	24.294	2903
520	77.915	81.695		0.17	0.16	1.36	1.04	0.36	80	80	67	2.75	1.60	71	0.044	107	100	90.8	0.14	2.99	15.5265989	118.9	173.1	151.7	52.4	171.3	164	67	66	67	0.026	1.001	24.932	2969
521	78.078	81.853		0.16	0.16	1.36	1.04	0.36	80	80	67	2.72	1.60	71	0.044	105	99	91.3	-0.45	2.97	15.4227695	118.6	172.7	151.5	52.4	170.9	162	67	66	67	0.025	1.001	24.778	2942
522	78.242	82.012		0.16	0.16	1.37	1.05	0.36	80	80	67	2.74	1.60	71	0.044	106	100	91.1	0.22	2.97	15.4204483	118.0	172.1	151.0	52.4	170.3	160	67	66	67	0.025	1.001	24.779	2927
523	78.406	82.171		0.16	0.16	1.35	1.05	0.36	80	80	67	2.73	1.60	71	0.046	103	98	91.2	-0.15	3.05	15.4784517	117.5	171.5	150.6	52.4	169.8	158	67	66	67	0.024	1.001	25.428	2990
524	78.572	82.330		0.17	0.16	1.37	1.05	0.36	80	80	67	2.72	1.60	71	0.043	108	101	91.3	-0.04	3.07	15.5463533	116.8	170.9	150.1	52.4	169.2	156	67	66	67	0.024	1.001	25.587	2993
525	78.735	82.490		0.16	0.16	1.37	1.06	0.36	80	80	67	2.74	1.60	71	0.046	103	98	90.9	0.35	3.07	15.3767767	116.3	170.5	149.6	52.4	168.7	154	67	66	67	0.023	1.001	25.587	2980
526	78.898	82.649		0.16	0.16	1.37	1.05	0.36	80	80	67	2.72	1.6	71	0.045	104	99	91.0	-0.10	2.95	15.4611092	115.9	170.0	149.3	52.4	168.3	153	67	66	67	0.022	1.001	24.615	2856
527	79.061	82.809		0.16	0.16	1.36	1.06	0.36	80	80	67	2.73	1.6	71	0.046	103	98	91.4	-0.40	2.93	15.4612598	115.4	169.5	148.9	52.4	167.8	151	67	66	67	0.022	1.001	24.459	2825
528	79.225	82.969		0.16	0.16	1.36	1.06	0.36	80	80	67	2.73	1.6	71	0.046	103	98	91.1	0.29	2.91	15.4230127	114.9	169.0	148.5	52.4	167.2	150	67	66	67	0.021	1.001	24.295	2794
529	79.389	83.129		0.16	0.16	1.36	1.05	0.36	80	80	67	2.72	1.6	71	0.041	109	104	91.1	0.01	2.97	15.4228868	114.3	168.4	148.0	52.4	166.6	148	67	66	67	0.021	1.001	24.776	2834
530	79.552	83.289		0.16	0.16	1.36	1.06	0.36	80	80	67	2.72	1.6	71	0.044	105	100	91.3	-0.20	3.07	15.4992857	113.9	168.0	147.6	52.4	166.2	146	67	66	67	0.021	1.001	25.589	2917
531	79.719	83.449		0.17	0.16	1.37	1.06	0.36	80	80	67	2.73	1.6	71	0.043	109	102	91.4	-0.13	3.05	15.4613771	113.3	167.4	147.2	52.4	165.7	145	67	66	67	0.020	1.001	25.399	2881
532	79.884	83.610		0.17	0.16	1.36	1.06	0.36	80	80	67	2.74	1.6	71	0.041	110	105	91.4	0.01	2.93	15.4775095	112.7	166.8	146.8	52.4	165.1	144	67	66	67	0.021	1.001	24.394	2753
533	80.047	83.769		0.16	0.16	1.34	1.06	0.36	80	80	67	2.69	1.6	71	0.045	104	99	91.4	0.02	3.01	15.4408522	112.3	166.4	146.3	52.4	164.6	143	67	66	67	0.020	1.001	25.102	2821
534	80.208	83.929		0.16	0.16	1.32	1.06	0.36	80	80	67	2.68	1.6	71	0.045	103	99	91.9	-0.48	2.98	15.5079346	111.7	165.9	145.9	52.4	164.1	142	67	66	67	0.020	1.001	24.885	2784
535	80.368	84.089		0.16	0.16	1.33	1.05	0.36	80	80	67	2.69	1.6	71	0.045	102	99	92.0	-0.09	3.03	15.4346638	111.3	165.4	145.6	52.4	163.7	141	67	66	67	0.019	1.001	25.263	2816
536	80.529	84.249		0.16	0.16	1.32	1.06	0.36	80	80	67	2.68	1.6	71	0.047	100	97	91.4	0.56	2.99	15.4793921	110.9	165.0	145.2	52.4	163.3	139	67	66	67	0.019	1.001	24.939	2769
537	80.690	84.409		0.16	0.16	1.32	1.06	0.36	80	80	67	2.68	1.6	71	0.043	105	102	91.2	0.20	2.95	15.5283384	110.2	164.3	144.6	52.4	162.5	138	67	66	67	0.018	1.001	24.609	2714
538	80.851	84.570		0.16	0.16	1.32	1.06	0.36	80	80	67	2.68	1.6	71	0.045	103	100	91.3	-0.04	3.01	15.4993849	109.8	163.9	144.2	52.4	162.2	136	67	66	67	0.018	1.001	25.095	2759
539	81.011	84.729		0.16	0.16	1.33	1.06	0.36	80	80	67	2.68	1.6	71	0.044	103	100	91.3	-0.06	2.99	15.528327	109.2	163.4	143.8	52.4	161.6	135	67	66	67	0.018	1.001	24.938	2727
540	81.172	84.889		0.16	0.16	1.33	1.06	0.36	80	80	67	2.69	1.6	71	0.045	103	99	92.0	-0.70	3.01	15.4323111	108.8	162.9	143.5	52.4	161.2	134	67	66	67	0.017	1.001	25.099	2734
541	81.333	85.050		0.16	0.16	1.33	1.06	0.36	80	80	67	2.69	1.6	71	0.046	101	99	91.5	0.51	3.01	15.6047468	108.1	162.2	142.9	52.4	160.5	133	67	66	67	0.017	1.001	25.104	2718
542	81.494	85.209		0.16	0.16	1.33	1.06	0.36	80	80	67	2.69	1.6	71	0.045	103	99	91.2	0.29	3.09	15.528573	107.7	161.7	142.5	52.4	160.0	132	67	66	67	0.017	1.001	25.751	2776
543	81.654	85.369		0.16	0.16	1.31	1.04	0.36	80	80	67	2.71	1.6	86	0.042	107	104	90.8	0.41	3.11	15.4795761	107.0	161.3	141.5	52.4	159.4	177	68	67	67	0.040	1.001	25.915	2777
544	81.814	85.528		0.16	0.16	1.33	1.04	0.36	80	80	67	2.71	1.6	90	0.045	104	100	89.8	1.03	3.11	15.461154	106.4	160.6	141.0	52.4	158.7	210	69	68	67	0.040	1.001	25.908	2759
545	81.975	85.686		0.16	0.16	1.32	1.05	0.36	80	80	67	2.71	1.6	94	0.046	104	99	88.8	0.98	3.07	15.3769732	106.2	160.5	140.8	52.3	158.5	232	69	68	67	0.042	1.001	25.582	2720

Elapsed Time	Particulate Sampling Data																	Fuel Weight, lb		Flow, gpm		Temperature Data, oF														
	Gas Meter Cubic Feet (1)	Gas Meter Cubic Feet (2)	Gas Meter Cubic Feet (amb)	Sample Rate, cfm (1)	Sample Rate, cfm (2)	Orifice dH (1)	Orifice dH (2)	Orifice dH (amb)	Meter oF (1)	Meter oF (2)	Meter oF (amb)	Meter Vac. In. Hg. (1)	Meter Vac. In. Hg. (2)	Dilution Tunnel Temp.	Dilution Tunnel dP	Pro. Rate (%) (1)	Pro. Rate (%) (2)	Scale Reading	Weight Change	Load Side Liquid Flow Rate	Boiler Side Liquid Flow Rate (optional)	Thermopile ΔT	Boiler to Heat Exch. Temp.	Heat Exch to Boiler Temp.	Inlet Load Temp.	Outlet Load Temp.	Stack	Filter (1)	Filter (2)	Ambient	Stack Draft	Specific Heat of Inlet Water (BTU/lb-°F)	Mass Flow Rate of Inlet Water (lb/min)	Heat Output, Btu
546	82.135	85.846		0.16	0.16	1.33	1.05	0.36	80	80	67	2.72	1.6	97	0.046	103	101	88.4	0.44	3.13	15.4997616	106.3	160.5	140.9	52.3	158.6	249	69	68	67	0.045	1.001	26.078	2774
547	82.295	86.004		0.16	0.16	1.33	1.05	0.36	80	80	67	2.71	1.6	100	0.043	107	103	87.3	1.07	3.05	15.4421225	106.2	160.5	140.8	52.4	158.6	261	69	68	67	0.042	1.001	25.458	2707
548	82.455	86.163		0.16	0.16	1.33	1.05	0.36	80	80	67	2.71	1.6	102	0.045	105	101	86.8	0.53	3.14	15.5464659	106.4	160.7	140.9	52.4	158.8	269	70	68	67	0.044	1.001	26.223	2794
549	82.616	86.322		0.16	0.16	1.32	1.05	0.36	80	80	67	2.71	1.6	103	0.045	106	102	85.1	1.70	3.13	15.3933611	106.8	161.2	141.2	52.4	159.2	274	70	68	67	0.049	1.001	26.127	2794
550	82.776	86.479		0.16	0.16	1.33	1.05	0.36	80	80	67	2.71	1.6	104	0.045	105	100	83.9	1.14	3.08	15.4839125	107.1	161.4	141.4	52.4	159.5	276	71	69	67	0.046	1.001	25.670	2752
551	82.936	86.638		0.16	0.16	1.33	1.05	0.36	80	80	67	2.72	1.6	105	0.043	108	104	83.4	0.51	3.13	15.5343714	107.6	162.0	141.8	52.3	160.0	279	71	69	67	0.048	1.001	26.064	2809
552	83.096	86.796		0.16	0.16	1.33	1.05	0.36	80	80	67	2.71	1.6	106	0.043	108	103	82.8	0.60	3.17	15.3557177	108.2	162.5	142.2	52.3	160.6	283	72	69	67	0.050	1.001	26.399	2860
553	83.256	86.954		0.16	0.16	1.33	1.04	0.36	80	80	67	2.71	1.6	108	0.045	105	101	80.9	1.87	3.05	15.5153809	109.0	163.3	142.9	52.4	161.4	287	72	69	67	0.050	1.001	25.428	2775
554	83.416	87.112		0.16	0.16	1.32	1.04	0.36	80	80	67	2.73	1.6	109	0.046	104	100	80.0	0.91	3.17	15.4396801	109.6	163.9	143.4	52.4	161.9	290	72	70	67	0.050	1.001	26.399	2897
555	83.575	87.269		0.16	0.16	1.33	1.04	0.36	80	80	67	2.72	1.6	110	0.046	104	100	78.8	1.20	3.22	15.4416161	110.4	164.8	143.9	52.4	162.7	293	73	70	67	0.053	1.001	26.882	2970
556	83.735	87.428		0.16	0.16	1.32	1.04	0.36	80	80	67	2.72	1.6	110	0.043	108	105	77.2	1.62	3.24	15.4666367	111.1	165.4	144.5	52.3	163.4	294	73	71	67	0.050	1.001	27.040	3008
557	83.895	87.585		0.16	0.16	1.32	1.04	0.36	80	80	67	2.73	1.6	111	0.045	106	101	77.2	-0.01	3.18	15.5283136	111.8	166.2	144.8	52.4	164.1	296	73	71	67	0.047	1.001	26.558	2972
558	84.054	87.743		0.16	0.16	1.32	1.04	0.36	80	80	67	2.73	1.6	110	0.039	113	109	76.3	0.96	3.15	15.4028006	112.7	167.2	145.6	52.3	165.1	295	74	71	67	0.050	1.001	26.227	2960
559	84.214	87.900		0.16	0.16	1.32	1.03	0.36	80	80	67	2.73	1.7	111	0.046	105	100	74.3	1.97	3.24	15.4412441	113.6	168.1	146.3	52.3	165.9	297	74	72	67	0.051	1.001	27.036	3075
560	84.373	88.057		0.16	0.16	1.31	1.04	0.36	80	80	67	2.73	1.7	111	0.044	106	102	73.7	0.62	3.22	15.3933716	114.2	168.8	146.8	52.3	166.6	298	74	72	67	0.053	1.001	26.880	3075
561	84.533	88.215		0.16	0.16	1.32	1.03	0.36	80	80	67	2.74	1.7	111	0.041	111	106	72.8	0.89	3.20	15.4519119	115.3	169.8	147.7	52.3	167.6	298	74	72	67	0.048	1.001	26.724	3085
562	84.693	88.371		0.16	0.16	1.31	1.03	0.36	80	80	67	2.74	1.7	112	0.044	107	102	71.1	1.69	3.21	15.4587517	116.2	170.7	148.3	52.3	168.5	300	75	72	67	0.051	1.001	26.767	3114
563	84.853	88.529		0.16	0.16	1.31	1.03	0.36	80	80	67	2.75	1.7	111	0.041	111	106	69.9	1.16	3.19	15.4146814	117.3	171.8	149.2	52.3	169.6	299	75	73	67	0.053	1.001	26.626	3126
564	85.011	88.685		0.16	0.16	1.32	1.03	0.36	80	80	67	2.76	1.7	112	0.042	108	104	69.5	0.49	3.20	15.584857	117.9	172.4	149.7	52.3	170.3	299	75	73	67	0.052	1.001	26.718	3154
565	85.171	88.843		0.16	0.16	1.3	1.02	0.36	80	80	67	2.75	1.7	113	0.047	104	100	68.2	1.26	3.18	15.5446453	118.8	173.3	150.4	52.3	171.1	301	76	73	67	0.053	1.001	26.555	3159
566	85.329	88.998		0.16	0.16	1.31	1.02	0.36	80	80	67	2.76	1.7	113	0.043	107	102	66.4	1.75	3.17	15.4859943	119.6	174.1	151.2	52.4	172.0	302	76	73	67	0.052	1.001	26.396	3161
567	85.488	89.155		0.16	0.16	1.31	1.02	0.36	80	80	67	2.76	1.7	112	0.042	109	105	66.5	-0.02	3.22	15.4900122	120.5	175.0	151.9	52.3	172.8	303	76	73	67	0.051	1.001	26.880	3243
568	85.647	89.310		0.16	0.16	1.31	1.02	0.36	80	80	67	2.76	1.7	113	0.046	104	99	64.8	1.72	3.22	15.451993	121.4	175.9	152.6	52.3	173.7	303	76	74	67	0.050	1.001	26.880	3266
569	85.806	89.467		0.16	0.16	1.3	1.02	0.36	80	80	67	2.77	1.7	113	0.046	104	100	63.6	1.17	3.19	15.5271482	122.2	176.7	153.2	52.4	174.5	304	76	74	67	0.049	1.001	26.560	3249
570	85.964	89.622		0.16	0.16	1.3	1.01	0.36	80	80	67	2.78	1.7	113	0.041	109	105	62.4	1.15	3.18	15.4028006	122.9	177.4	153.8	52.4	175.2	304	76	74	67	0.051	1.001	26.553	3266
571	86.124	89.779		0.16	0.16	1.3	1.01	0.36	80	80	67	2.78	1.7	114	0.046	105	100	61.2	1.19	3.11	15.4793396	123.8	178.4	154.5	52.3	176.2	306	77	74	67	0.054	1.001	25.915	3213
572	86.282	89.933		0.16	0.15	1.3	1.01	0.36	80	80	67	2.78	1.7	114	0.044	106	100	60.1	1.16	3.32	15.4413404	125.1	179.4	156.3	52.4	177.4	307	77	74	67	0.054	1.001	27.683	3466
573	86.441	90.089		0.16	0.16	1.3	1.00	0.36	80	80	67	2.79	1.7	113	0.043	108	103	59.3	0.79	3.37	15.5081215	125.7	180.2	156.0	52.4	178.0	306	77	74	67	0.053	1.001	28.142	3540
574	86.598	90.243		0.16	0.15	1.3	1.01	0.36	80	80	67	2.79	1.7	114	0.040	110	105	57.6	1.65	3.18	15.4786749	126.4	181.0	156.6	52.4	178.8	308	77	74	67	0.051	1.001	26.559	3362
575	86.757	90.399		0.16	0.16	1.3	1.00	0.36	80	80	67	2.81	1.7	115	0.044	107	102	57.2	0.41	3.11	15.4794321	127.4	182.0	157.3	52.4	179.8	309	77	74	67	0.057	1.001	25.976	3313
576	86.914	90.553		0.16	0.15	1.29	1.00	0.36	80	80	67	2.81	1.7	114	0.042	108	103	55.9	1.33	3.15	15.4795361	128.0	182.5	157.8	52.4	180.3	308	77	74	67	0.054	1.001	26.228	3361
577	87.072	90.709		0.16	0.16	1.29	1.00	0.36	80	80	67	2.8	1.7	103	0.043	106	102	55.2	0.67	3.18	15.531764	128.9	183.4	158.6	52.4	181.3	298	77	74	67	0.039	1.001	26.547	3426
578	87.231	90.863		0.16	0.15	1.29	1.00	0.36	80	80	67	2.8	1.7	88	0.044	104	98	54.8	0.44	3.18	15.5283537	129.5	184.0	159.0	52.4	181.8	267	76	73	67	0.038	1.001	26.557	3443
579	87.390	91.019		0.16	0.16	1.29	1.00	0.36	80	80	67	2.8	1.7	85	0.046	101	97	54.3	0.54	3.18	15.4409485	129.4	183.9	159.1	52.3	181.8	250	75	72	67	0.037	1.001	26.557	3442
580	87.548	91.174		0.16	0.16	1.27	1.00	0.36	80	80	67	2.82	1.7	82	0.042	105	101	53.8	0.47	3.18	15.4433374	129.3	183.8	158.9	52.4	181.6	239	74	71	67	0.038	1.001	26.552	3437
581	87.705	91.330		0.16	0.16	1.29	1.00	0.36	80	80	67	2.79	1.7	82	0.043	103	100	54.0	-0.19	3.24	15.5283833	129.1	183.5	158.8	52.3	181.5	232	73	71	67	0.037	1.001	27.039	3495
582	87.863	91.485		0.16	0.16	1.29	1.00	0.36	80	80	67	2.8	1.7	77	0.044	102	98	53.4	0.55	3.22	15.3557835	129.0	183.5	158.7	52.3	181.4	228	72	69	67	0.036	1.001	26.877	3472
583	88.022	91.641		0.16	0.16	1.29	1.00	0.36	80	80	67	2.78	1.7	77	0.044	103	98	52.8	0.63	3.15	15.4413204	128.8	183.3	158.6	52.3	181.1	224	72	69	67	0.036	1.001	26.230	3383
584	88.180	91.797		0.16	0.16	1.3	1.01	0.36	80	80	67	2.78	1.7	76	0.049	97	93	53.5	-0.66	3.16	15.4413586	128.4	182.9	158.3	52.3	180.8	219	71	68	67	0.036	1.001	26.389	3393
585	88.340	91.953		0.16	0.16	1.3	1.00	0.36	80	80	67	2.76	1.7	76	0.045	102	97	53.3	0.18	3.22	15.4132185	128.0	182.5	157.9	52.3	180.3	216	70	68	67	0.035	1.001	26.880	3445
586	88.499	92.109		0.16	0.16	1.3	1.01	0.36	80	80	67	2.77	1.7	75	0.046	101	96	53.2	0.08	3.20	15.4607439	127.7	182.2	157.7	52.3	180.0	213	70	67	67	0.035	1.001	26.716	3415
587	88.658	92.266		0.16	0.16	1.3	1.01	0.36	80	80	67	2.75	1.7	74	0.046	100	97	53.3	-0.14	3.11	15.4770994	127.2	181.7	157.4	52.4	179.6	211	70	67	67	0.033	1.001	25.952	3305
588	88.818	92.422		0.16	0.16	1.29	1.02	0.36	80	80	67	2.75	1.7	73	0.045	102	97	53.0	0.38	3.19	15.4336224	126.9	181.5	157.2	52.3	179.3	211	70	68	67	0.034	1.001	26.566	3376
589	88.977	92.580		0.16	0.16	1.3	1.02	0.36	80	80	67	2.75	1.7	72	0.043	104	100	53.2	-0.20	3.16	15.424428	126.5	181.0	156.8	52.3	178.8	210	70	68	67	0.035	1.001	26.384	3341
590	89.136	92.736		0.16	0.16	1.3	1.03	0.36	80	80	67	2.73	1.6	72	0.045	101	97	53.0	0.11	3.28	15.5266638	126.1	180.7	156.4	52.4	178.4	207	69	68	67	0.035	1.001	27.330	3450
591	89.296	92.895		0.16	0.16	1.31	1.03	0.36	80	80	67	2.73	1.6	72	0.045	102	99	53.1	-0.07	3.16	15.5566473	125.4	179.9	155.9	52.4	177.8	205	69	68	67	0.036	1.001	26.386	3313
592	89.456	93.052		0.16	0.16	1.3	1.03	0.36	80	80	67	2.73	1.6	72	0.044	103	99	53.5	-0.38	3.09	15.4316959	125.0	179.6	155.7	52.3	177.4	202	69	68	67	0.035	1.001	25.769	3226
593	89.616	93.210		0.16	0.16	1.31	1.03	0.36	80	80	67	2.71	1.6	72	0.043	104	100	53.0	0.48	3.15	15.4554729	124.6	179.1	155.3	52.3	176.9	199	69	68	67	0.035	1.001	26.228	3272
594	89.776	93.368		0.16	0.16	1.32	1.03	0.36	80	80	67	2.72	1.6	72	0.047	100	96	53.3	-0.24	3.28	15.4613342	124.2	178.7	154.9	52.3	176.6	196	69	68	67	0.035	1.001	27.366	3404
595	89.936	93.526		0.16	0.16	1.31	1.04	0.36	80	80	67	2.71	1.6	72	0.046	101	97	53.4	-0.11	3.24	15.4524755	123.6	178.1	154.3	52.3	175.9	194	69	68	67	0.035	1.001	27.043	3347
596	90.096	93.686		0.16	0.16	1.32	1.04	0.36	80	80	67	2.72	1.6	72	0.047	100	97	53.0	0.36	3.30	15.4797316	123.1	177.7	153.8	52.3	175.4	191	69	68	67	0.033	1.001	27.522	3392
597	90.257	93.844		0.16	0.16	1.32	1.04	0.36	80	80	67	2.7	1.6	72	0.044	104	99	53.4	-0.42	3.22	15.39433	122.5	177.0	153.3	52.4	174.8	188	69	68	67	0.032	1.001	26.880	3296
598	90.417	94.003		0.16	0.16	1.32	1.05	0.36	80	80	67	2.71	1.6	72	0.045	102	99	53.4	0.05	3.20	15.613308	121.8	176.5	152.9	52.4	174.2	186	69	68	67	0.032	1.001	26.719	3259
599	90.578	94.162		0.16	0.16	1.31	1.05	0.36	80	80	67	2.7	1.6	72	0.043	105	101	53.3	0.12	3.26	15.4519463	121.5	176.0	152.7	52.3	173.8	183	69	68	67	0.031	1.001	27.205	3309
600	90.739	94.321		0.16	0.16	1.32	1.05	0.36	80	80	67	2.70	1.60	72	0.045	103	99	53.5	-0.27	3.18	15.5717821	120.9	175.5	152.1	52.4	173.3	180	69	68	67	0.030	1.001	26.552	3214
601	90.900	94.481		0.16	0.16	1.32	1.06	0.36	80	80	67	2.70	1.60	72	0.047	100	97	53.2	0.33	3.19	15.4411917	120.4	174.9	151.8	52.3	172.7	178	68	68	67	0.029	1.001	26.601	3206
602	91.060	94.639		0.16	0.16	1.32	1.01	0.36	80	80	67	2.70	1.50	72	0.044	103	99	53.7	-0.46	3.22	15.4613886	120.0	174.5	151.5	52.4	172.4	176	68	68	67	0.029	1.001	26.847	3226
603	91.221	94.795		0.16	0.16	1.32	1.01	0.36	80	80	67	2.70	1.50	72	0.044	104	98	53.8	-0.14	3.14	15.5731297	119.4	173.9	151.0	52.3	171.8	173	68	68	67	0.028	1.001	26.196	3132
604	91.382	94.953		0.16	0.16	1.33	1.02	0.36	80	80	67	2.70	1.50	71	0.046	101	97	53.1	0.70	3.20	15.4691582	118.9	173.4	150.5	52.3	171.2	171	68	68	67	0.027	1.001	26.655	3173
605	91.542	95.109		0.16	0.16	1.32	1.02	0.36	80	80	67	2.70	1.50	72	0.045	102	97	53.6	-0.55	3.24	15.499752	118.3	172.8	150.1	52.4	170.6	169	68	68	67	0.026	1.001	27.030	3201
606	91.703	95.266		0.16	0.16	1.31	1.02	0.36	80	80	67	2.68	1.50	71	0.045	103	97	53.9	-0.25	3.22	15.4782352	117.7	172.2	149.6	52.4	170.1	167	68	67	67	0.026	1.001	26.879	3169
607	91.864	95.422		0.16	0.16	1.31	1.02	0.36	80	80	67	2.68	1.50	71	0.042	106	100	53.4	0.46	3.19	15.556674	117.2	171.7	149.3	52.3	169.6	165	68	67	67	0.025	1.001	26.563	3117

Elapsed Time	Particulate Sampling Data																	Fuel Weight, lb		Flow, gpm		Temperature Data, oF												
	Gas Meter Cubic Feet (1)	Gas Meter Cubic Feet (2)	Gas Meter Cubic Feet (amb)	Sample Rate, cfm (1)	Sample Rate, cfm (2)	Orifice dH (1)	Orifice dH (2)	Orifice dH (amb)	Meter oF (1)	Meter oF (2)	Meter oF (amb)	Meter Vac. In. Hg. (1)	Meter Vac. In. Hg. (2)	Dilution Tunnel Temp.	Dilution Tunnel dP	Pro. Rate (%) (1)	Pro. Rate (%) (2)	Scale Reading	Weight Change	Load Side Liquid Flow Rate	Boiler Side Liquid Flow Rate (optional)	Thermopile ΔT	Boiler to Heat Exch. Temp.	Heat Exch to Boiler Temp.	Inlet Load Temp.	Outlet Load Temp.	Stack	Filter (1)	Filter (2)	Ambient	Stack Draft	Specific Heat of Inlet Water (BTU/lb-°F)	Mass Flow Rate of Inlet Water (lb/min)	Heat Output, Btu
608	92.024	95.581		0.16	0.16	1.32	1.01	0.36	80	80	67	2.69	1.50	72	0.045	102	99	53.9	-0.42	3.26	15.4230261	116.5	171.1	148.5	52.3	168.8	163	68	67	67	0.023	1.001	27.202	3172
609	92.185	95.737		0.16	0.16	1.31	1.01	0.36	80	80	67	2.68	1.50	71	0.043	105	99	54.2	-0.31	3.26	15.4978838	116.1	170.6	148.3	52.3	168.4	161	68	67	67	0.022	1.001	27.202	3162
610	92.345	95.894		0.16	0.16	1.32	1.02	0.36	80	80	67	2.68	1.50	71	0.046	101	96	54.1	0.06	3.18	15.4613543	115.6	170.1	147.8	52.3	167.9	159	68	67	67	0.024	1.001	26.553	3073
611	92.506	96.050		0.16	0.16	1.32	1.02	0.36	80	80	67	2.68	1.50	71	0.042	106	100	53.9	0.23	3.22	15.4136066	115.0	169.5	147.5	52.3	167.4	157	68	67	67	0.021	1.001	26.870	3095
612	92.666	96.207		0.16	0.16	1.32	1.02	0.36	80	80	67	2.68	1.50	71	0.045	102	97	54.5	-0.62	3.24	15.4963923	114.4	169.0	146.9	52.3	166.8	155	68	67	67	0.021	1.001	27.023	3096
613	92.827	96.364		0.16	0.16	1.32	1.01	0.36	80	80	67	2.70	1.50	71	0.043	105	100	53.9	0.60	3.26	15.4997768	113.9	168.4	146.2	52.3	166.2	154	68	67	67	0.021	1.001	27.201	3101
614	92.988	96.520		0.16	0.16	1.32	1.02	0.36	80	80	67	2.69	1.50	71	0.044	104	98	53.9	0.00	3.28	15.4517412	113.3	167.8	145.7	52.3	165.6	152	68	67	67	0.021	1.001	27.361	3103
615	93.148	96.678		0.16	0.16	1.32	1.01	0.36	80	80	67	2.68	1.50	71	0.042	105	101	54.3	-0.45	3.24	15.4701319	112.6	167.2	145.1	52.3	165.0	150	68	67	67	0.020	1.001	26.984	3043
616	93.309	96.835		0.16	0.16	1.32	1.02	0.36	80	80	67	2.68	1.50	71	0.046	101	96	54.3	0.00	3.24	15.4316216	112.1	166.7	144.6	52.3	164.5	148	68	67	67	0.020	1.001	27.038	3035
617	93.470	96.992		0.16	0.16	1.33	1.01	0.36	80	80	67	2.68	1.50	71	0.043	105	100	54.1	0.19	3.26	15.490078	111.6	166.1	144.2	52.3	163.9	147	68	67	67	0.019	1.001	27.205	3039
618	93.630	97.148		0.16	0.16	1.32	1.02	0.36	80	80	67	2.69	1.50	71	0.047	100	95	54.1	0.08	3.20	15.4995451	111.0	165.5	143.7	52.3	163.4	146	68	67	67	0.019	1.001	26.720	2970
619	93.791	97.306		0.16	0.16	1.32	1.02	0.36	80	80	67	2.69	1.50	71	0.046	101	97	53.8	0.27	3.34	15.5370617	110.5	165.1	143.4	52.3	162.8	144	68	67	67	0.019	1.001	27.849	3082
620	93.952	97.462		0.16	0.16	1.32	1.02	0.36	80	80	67	2.69	1.50	71	0.046	101	96	54.3	-0.52	3.26	15.3933201	109.8	164.3	142.8	52.3	162.2	142	68	67	67	0.019	1.001	27.202	2991
621	94.112	97.620		0.16	0.16	1.32	1.02	0.36	80	80	67	2.69	1.50	71	0.046	101	97	54.4	-0.13	3.34	15.4904118	109.3	163.9	142.4	52.3	161.7	141	68	67	67	0.018	1.001	27.849	3048
622	94.273	97.776		0.16	0.16	1.32	1.02	0.36	80	80	67	2.70	1.50	71	0.045	103	97	54.0	0.43	3.28	15.5567036	108.8	163.2	141.9	52.3	161.1	140	68	67	67	0.018	1.001	27.354	2978
623	94.434	97.933		0.16	0.16	1.32	1.01	0.36	80	80	67	2.68	1.50	71	0.046	101	96	54.1	-0.06	3.22	15.5080585	108.1	162.6	141.3	52.3	160.4	139	68	67	67	0.018	1.001	26.883	2911
624	94.595	98.090		0.16	0.16	1.33	1.02	0.36	80	80	67	2.69	1.50	71	0.046	101	96	53.9	0.15	3.24	15.4318848	107.6	162.1	141.0	52.3	159.9	137	68	67	67	0.017	1.001	27.046	2913
625	94.756	98.246		0.16	0.16	1.31	1.01	0.36	80	80	67	2.71	1.60	86	0.047	102	96	54.0	-0.07	3.21	15.460928	107.1	161.6	140.5	52.3	159.4	182	69	68	67	0.037	1.001	26.764	2869
626	94.916	98.402		0.16	0.16	1.32	1.01	0.36	80	80	67	2.71	1.60	90	0.046	103	97	53.0	0.99	3.22	15.4400654	106.4	160.8	139.9	52.3	158.7	212	69	68	67	0.038	1.001	26.865	2861
627	95.077	98.558		0.16	0.16	1.32	1.02	0.36	80	80	67	2.70	1.60	93	0.038	114	107	52.3	0.71	3.37	15.4994144	106.3	160.8	139.9	52.4	158.6	234	69	68	67	0.042	1.001	28.115	2992
628	95.237	98.714		0.16	0.16	1.33	1.02	0.36	80	80	67	2.71	1.60	97	0.041	109	104	51.2	1.12	3.20	15.4747334	106.2	160.8	139.8	52.3	158.6	248	69	68	67	0.040	1.001	26.714	2842
629	95.397	98.870		0.16	0.16	1.33	1.02	0.36	80	80	67	2.71	1.60	99	0.044	106	100	51.2	-0.01	3.30	15.4381275	106.4	160.8	140.0	52.3	158.7	258	69	68	67	0.046	1.001	27.529	2932
630	95.557	99.027		0.16	0.16	1.33	1.01	0.36	80	80	67	2.71	1.60	101	0.046	104	99	49.2	1.93	3.28	15.403594	106.6	161.2	140.2	52.3	159.0	265	70	68	67	0.041	1.001	27.366	2922
631	95.717	99.182		0.16	0.16	1.33	1.01	0.36	80	80	67	2.70	1.60	102	0.045	105	99	49.4	-0.15	3.16	15.4792604	106.8	161.3	140.3	52.3	159.1	271	70	68	67	0.044	1.001	26.388	2821
632	95.878	99.339		0.16	0.16	1.33	1.01	0.36	80	80	67	2.71	1.60	104	0.046	105	99	47.5	1.89	3.22	15.435504	107.3	161.8	140.6	52.3	159.6	275	71	68	67	0.045	1.001	26.882	2887
633	96.037	99.494		0.16	0.16	1.33	1.01	0.36	80	80	67	2.70	1.60	105	0.044	106	100	47.6	-0.14	3.32	15.4234476	107.7	162.3	141.0	52.3	160.1	279	71	69	67	0.042	1.001	27.679	2985
634	96.198	99.650		0.16	0.16	1.32	1.01	0.36	80	80	67	2.72	1.60	106	0.044	107	101	46.0	1.63	3.20	15.5367889	108.4	163.0	141.5	52.3	160.7	282	71	69	67	0.045	1.001	26.714	2900
635	96.358	99.805		0.16	0.16	1.32	1.01	0.36	80	80	67	2.71	1.60	107	0.042	109	103	45.1	0.92	3.26	15.3934307	109.3	163.8	142.1	52.4	161.6	286	72	69	67	0.049	1.001	27.189	2974
636	96.518	99.960		0.16	0.15	1.33	1.01	0.36	80	80	67	2.73	1.60	108	0.044	107	101	44.1	1.00	3.28	15.4230175	109.9	164.5	142.8	52.4	162.3	289	72	69	67	0.049	1.001	27.357	3011
637	96.678	100.116		0.16	0.16	1.33	1.01	0.36	80	80	67	2.72	1.60	108	0.046	104	99	43.3	0.85	3.35	15.5175285	110.8	165.5	143.4	52.3	163.2	290	72	69	67	0.046	1.001	27.931	3100
638	96.838	100.271		0.16	0.16	1.33	1.01	0.36	80	80	67	2.71	1.60	109	0.043	108	102	41.9	1.36	3.29	15.4410639	111.7	166.4	144.3	52.4	164.1	291	72	70	67	0.049	1.001	27.423	3067
639	96.998	100.427		0.16	0.16	1.33	1.01	0.36	80	80	67	2.72	1.60	109	0.044	107	101	40.9	1.01	3.28	15.510087	112.5	167.1	145.0	52.3	164.8	293	73	70	67	0.048	1.001	27.367	3082
640	97.158	100.581		0.16	0.15	1.33	1.00	0.36	80	80	67	2.72	1.60	110	0.044	107	100	40.4	0.46	3.26	15.4698591	113.3	167.9	145.6	52.4	165.7	296	73	70	67	0.049	1.001	27.202	3086
641	97.318	100.737		0.16	0.16	1.33	1.00	0.36	80	80	67	2.72	1.60	109	0.041	110	105	39.2	1.19	3.22	15.5566988	114.3	168.9	146.3	52.3	166.6	295	73	70	67	0.049	1.001	26.879	3075
642	97.478	100.891		0.16	0.15	1.33	1.01	0.36	80	80	67	2.73	1.60	110	0.040	112	105	38.7	0.49	3.24	15.4650297	115.2	169.8	147.0	52.4	167.5	297	73	71	67	0.053	1.001	27.039	3118
643	97.638	101.046		0.16	0.16	1.32	1.00	0.36	80	80	67	2.73	1.60	111	0.044	107	101	37.5	1.29	3.34	15.4782562	115.9	170.6	147.7	52.4	168.3	299	74	71	67	0.045	1.001	27.849	3233
644	97.797	101.200		0.16	0.15	1.32	1.00	0.36	80	80	67	2.72	1.60	112	0.045	105	99	35.9	1.60	3.30	15.4993238	116.8	171.4	148.2	52.4	169.2	300	74	71	67	0.053	1.001	27.521	3218
645	97.957	101.355		0.16	0.16	1.32	1.00	0.36	80	80	67	2.73	1.60	112	0.045	106	100	35.7	0.14	3.20	15.5870447	117.9	172.7	149.2	52.4	170.3	301	74	71	67	0.056	1.001	26.718	3155
646	98.117	101.509		0.16	0.15	1.31	1.00	0.36	80	80	67	2.74	1.60	112	0.042	109	103	34.9	0.86	3.11	15.48983	119.1	173.5	150.8	52.4	171.5	302	74	72	67	0.051	1.001	25.907	3089
647	98.276	101.664		0.16	0.16	1.32	1.00	0.36	80	80	67	2.73	1.60	112	0.045	105	100	33.1	1.73	3.88	15.4764957	119.7	174.4	150.1	52.4	172.1	302	74	72	67	0.051	1.001	32.376	3881
648	98.435	101.818		0.16	0.15	1.32	1.00	0.36	80	80	67	2.74	1.60	112	0.041	110	104	32.1	1.06	3.82	15.5540352	119.5	174.9	146.7	52.3	171.7	303	75	72	67	0.051	1.001	31.892	3815
649	98.594	101.972		0.16	0.15	1.31	1.00	0.36	80	80	67	2.74	1.60	112	0.040	111	105	31.3	0.81	3.89	15.4997339	120.4	175.8	147.3	52.2	172.6	304	75	72	67	0.050	1.001	32.445	3910
650	98.754	102.127		0.16	0.16	1.32	0.99	0.36	80	80	67	2.75	1.60	113	0.045	106	100	29.9	1.32	3.90	15.4225531	121.0	176.4	147.8	52.2	173.2	304	75	72	67	0.049	1.001	32.533	3942
651	98.913	102.281		0.16	0.15	1.32	1.00	0.36	80	80	67	2.75	1.60	113	0.039	113	107	29.7	0.24	3.98	15.4899769	121.6	177.0	148.3	52.2	173.8	305	75	72	67	0.050	1.001	33.184	4039
652	99.073	102.436		0.16	0.16	1.32	0.99	0.36	80	80	67	2.74	1.60	113	0.044	107	101	28.9	0.83	3.96	15.4836864	122.1	177.6	148.6	52.2	174.3	306	75	72	67	0.052	1.001	33.022	4036
653	99.233	102.589		0.16	0.15	1.32	0.99	0.36	80	80	67	2.76	1.60	113	0.044	107	100	27.4	1.45	3.88	15.452137	122.9	178.4	149.4	52.2	175.1	306	75	72	67	0.051	1.001	32.369	3984
654	99.392	102.743		0.16	0.15	1.31	0.99	0.36	80	80	67	2.75	1.60	113	0.043	108	102	27.3	0.11	3.86	15.4438171	123.9	179.4	150.0	52.2	176.1	307	75	72	67	0.055	1.001	32.212	3996
655	99.551	102.897		0.16	0.15	1.31	0.99	0.36	80	80	67	2.76	1.60	113	0.044	106	100	25.9	1.42	3.90	15.4318714	124.5	179.9	150.5	52.2	176.7	307	75	72	67	0.054	1.001	32.536	4055
656	99.710	103.051		0.16	0.15	1.31	0.99	0.36	80	80	67	2.76	1.60	113	0.042	109	103	24.8	1.03	3.92	15.4870691	125.3	180.8	151.0	52.2	177.5	306	75	72	67	0.049	1.001	32.704	4103
657	99.869	103.205		0.16	0.15	1.31	0.99	0.36	80	80	67	2.77	1.60	113	0.048	102	96	23.7	1.16	3.96	15.4733524	126.0	181.5	151.6	52.2	178.2	305	75	72	67	0.050	1.001	33.040	4167
658	100.028	103.358		0.16	0.15	1.31	0.99	0.36	80	80	67	2.77	1.60	113	0.045	105	99	22.7	0.99	3.88	15.3968697	126.8	182.3	152.1	52.2	178.9	305	75	72	67	0.050	1.001	32.372	4108
659	100.187	103.512		0.16	0.15	1.31	0.98	0.36	80	80	67	2.76	1.60	112	0.044	106	100	22.0	0.73	3.90	15.4625149	127.3	182.8	152.7	52.2	179.5	304	75	72	67	0.054	1.001	32.529	4147
660	100.346	103.665		0.16	0.15	1.31	0.99	0.36	80	80	67	2.76	1.60	112	0.041	110	103	21.3	0.70	3.96	15.451601	128.0	183.5	153.0	52.2	180.2	304	75	72	67	0.048	1.001	33.023	4231
661	100.505	103.819		0.16	0.15	1.31	0.98	0.36	80	80	67	2.78	1.60	112	0.041	110	104	20.6	0.67	3.98	15.3847141	129.0	184.4	153.8	52.2	181.1	303	75	72	67	0.045	1.001	33.182	4284
662	100.664	103.973		0.16	0.15	1.31	0.99	0.36	80	80	67	2.75	1.60	105	0.044	106	100	19.9	0.74	3.92	15.4310284	129.4	184.9	154.1	52.2	181.6	301	75	72	67	0.040	1.001	32.689	4236
663	100.824	104.126		0.16	0.15	1.31	0.98	0.36	80	80	67	2.76	1.60	86	0.047	101	94	19.5	0.41	3.94	15.4701004	129.8	185.2	154.6	52.2	182.0	268	74	71	67	0.038	1.001	32.858	4269
664	100.983	104.281		0.16	0.16	1.30	0.98	0.36	80	80	67	2.76	1.60	82	0.046	101	96	18.9	0.53	3.82	15.4028883	129.3	184.7	154.1	52.2	181.5	251	74	71	67	0.037	1.001	31.889	4128
665	101.142	104.435		0.16	0.15	1.30	0.99	0.36	80	80	67	2.75	1.60	80	0.044	103	97	18.6	0.33	3.92	15.4135885	129.2	184.6	154.0	52.2	181.4	240	73	71	67	0.035	1.001	32.689	4228
666	101.302	104.590		0.16	0.16	1.30	0.98	0.36	80	80	67	2.75	1.60	80	0.044	104	98	19.2	-0.62	3.84	15.4601221	129.0	184.4	153.9	52.2	181.2	232	73	71	67	0.036	1.001	32.043	4137
667	101.461	104.744		0.16	0.15	1.30	0.99	0.36	80	80	67	2.74	1.60	77	0.045	102	96	19.1	0.12	3.94	15.4136896	128.3	183.7	153.3	52.2	180.5	229	73	71	67	0.034	1.001	32.818	4215
668	101.621	104.899		0.16	0.16	1.31	0.99	0.36	80	80	67	2.74	1.60	76	0.043	105	99	18.6	0.46	3.76	15.4317112	127.8	183.2	153.0	52.2	180.0	224	73	71	67	0.035	1.001	31.317	4009
669	101.780	105.055		0.16	0.16	1.31	0.99	0.36	80	80	67	2.73	1.60	75	0.043	104	99	18.9	-0.25	3.90	15.4783211	127.5	182.9	152.8	52.2	179.7	220	72	71	67	0.033	1.001	32.531	4153

Elapsed Time	Particulate Sampling Data																	Fuel Weight, lb		Flow, gpm		Temperature Data, oF												
	Gas Meter Cubic Feet (1)	Gas Meter Cubic Feet (2)	Gas Meter Cubic Feet (amb)	Sample Rate, cfm (1)	Sample Rate, cfm (2)	Orifice dH (1)	Orifice dH (2)	Orifice dH (amb)	Meter oF (1)	Meter oF (2)	Meter oF (amb)	Meter Vac. In. Hg. (1)	Meter Vac. In. Hg. (2)	Dilution Tunnel Temp.	Dilution Tunnel dP	Pro. Rate (%) (1)	Pro. Rate (%) (2)	Scale Reading	Weight Change	Load Side Liquid Flow Rate	Boiler Side Liquid Flow Rate (optional)	Thermopile ΔT	Boiler to Heat Exch. Temp.	Heat Exch to Boiler Temp.	Inlet Load Temp.	Outlet Load Temp.	Stack	Filter (1)	Filter (2)	Ambient	Stack Draft	Specific Heat of Inlet Water (BTU/lb-°F)	Mass Flow Rate of Inlet Water (lb/min)	Heat Output, Btu
670	101.940	105.210		0.16	0.15	1.31	1.00	0.36	80	80	67	2.73	1.60	75	0.044	103	98	18.9	-0.01	3.86	15.5180378	126.9	182.2	152.3	52.2	179.1	217	72	71	67	0.033	1.001	32.212	4093
671	102.100	105.366		0.16	0.16	1.31	1.00	0.36	80	80	67	2.73	1.60	74	0.045	102	97	19.2	-0.33	3.82	15.5271797	126.2	181.5	151.7	52.2	178.4	214	72	70	67	0.033	1.001	31.880	4027
672	102.260	105.521		0.16	0.16	1.32	1.00	0.36	80	80	67	2.72	1.60	74	0.046	101	95	18.8	0.45	3.77	15.4229612	125.6	181.0	151.3	52.2	177.8	211	72	70	67	0.031	1.001	31.407	3948
673	102.420	105.678		0.16	0.16	1.31	1.01	0.36	80	80	67	2.71	1.60	73	0.045	102	98	19.2	-0.41	3.86	15.4613676	124.9	180.3	150.8	52.2	177.1	212	71	70	67	0.032	1.001	32.210	4029
674	102.581	105.834		0.16	0.16	1.32	1.01	0.36	80	80	67	2.71	1.60	72	0.045	103	97	19.3	-0.13	3.82	15.441021	124.5	179.9	150.4	52.2	176.7	211	71	70	67	0.030	1.001	31.879	3974
675	102.742	105.990		0.16	0.16	1.30	1.01	0.36	80	80	67	2.71	1.50	72	0.046	101	96	19.3	-0.01	3.87	15.4405518	123.8	179.1	150.0	52.2	176.0	208	71	70	67	0.030	1.001	32.271	4001
676	102.902	106.146		0.16	0.16	1.31	1.01	0.36	80	80	67	2.70	1.60	72	0.048	99	94	19.1	0.20	3.97	15.4017239	123.3	178.6	149.5	52.2	175.5	206	71	70	67	0.030	1.001	33.109	4087
677	103.062	106.303		0.16	0.16	1.32	1.01	0.36	80	80	67	2.70	1.50	72	0.046	101	96	18.8	0.31	3.90	15.490118	122.6	177.9	149.0	52.2	174.7	203	70	70	67	0.030	1.001	32.533	3992
678	103.223	106.459		0.16	0.16	1.32	1.01	0.36	80	80	67	2.70	1.50	72	0.044	104	98	19.3	-0.43	3.80	15.3905525	121.7	177.0	148.4	52.2	173.9	200	70	69	67	0.030	1.001	31.721	3865
679	103.383	106.615		0.16	0.16	1.32	1.01	0.36	80	80	67	2.70	1.50	72	0.046	101	96	19.3	-0.06	3.96	15.4791975	121.2	176.6	147.9	52.2	173.4	197	70	69	67	0.030	1.001	33.026	4009
680	103.543	106.772		0.16	0.16	1.32	1.01	0.36	80	80	67	2.70	1.50	72	0.042	106	101	18.8	0.51	3.90	15.494544	120.7	176.0	147.5	52.2	172.9	195	70	69	67	0.029	1.001	32.534	3932
681	103.704	106.928		0.16	0.16	1.31	1.01	0.36	80	80	67	2.70	1.50	72	0.044	104	98	19.3	-0.46	3.77	15.4702225	119.9	175.1	146.9	52.2	172.1	192	70	69	67	0.029	1.001	31.397	3769
682	103.864	107.085		0.16	0.16	1.31	1.00	0.36	80	80	67	2.70	1.50	72	0.043	104	100	19.2	0.03	4.00	15.474885	119.1	174.3	146.3	52.2	171.3	189	70	69	67	0.029	1.001	33.347	3976
683	104.024	107.240		0.16	0.16	1.31	1.01	0.36	80	80	67	2.70	1.50	72	0.045	102	96	19.4	-0.13	3.92	15.4830532	118.5	173.8	145.9	52.2	170.7	187	69	69	67	0.028	1.001	32.672	3876
684	104.184	107.398		0.16	0.16	1.32	1.01	0.36	80	80	67	2.69	1.50	72	0.047	100	96	19.3	0.09	3.83	15.4637947	117.7	173.0	145.2	52.2	169.9	184	69	69	67	0.028	1.001	31.919	3760
685	104.345	107.553		0.16	0.16	1.31	1.01	0.36	80	80	67	2.70	1.50	72	0.046	101	95	19.3	0.00	3.86	15.4901838	117.2	172.6	144.8	52.2	169.4	181	69	69	67	0.027	1.001	32.213	3782
686	104.505	107.710		0.16	0.16	1.32	1.00	0.36	80	80	67	2.70	1.50	71	0.045	102	97	19.4	-0.13	3.88	15.4153261	116.3	171.6	144.1	52.2	168.5	179	69	69	67	0.026	1.001	32.370	3770
687	104.665	107.866		0.16	0.16	1.32	1.01	0.36	80	80	67	2.70	1.50	72	0.046	101	96	19.3	0.07	3.94	15.3790464	115.8	171.1	143.7	52.2	168.0	176	69	69	67	0.026	1.001	32.859	3809
688	104.825	108.023		0.16	0.16	1.32	1.01	0.36	80	80	67	2.70	1.50	72	0.041	107	102	19.2	0.13	3.82	15.4411697	115.1	170.4	143.1	52.2	167.3	174	69	69	67	0.025	1.001	31.890	3674
689	104.986	108.179		0.16	0.16	1.32	1.01	0.36	80	80	67	2.70	1.50	72	0.044	104	98	19.4	-0.17	3.98	15.3463564	114.3	169.5	142.6	52.2	166.5	172	69	69	67	0.024	1.001	33.186	3798
690	105.147	108.336		0.16	0.16	1.32	1.01	0.36	80	80	67	2.71	1.50	72	0.043	105	100	19.4	-0.05	3.90	15.42272	113.6	168.8	142.0	52.2	165.8	169	69	69	67	0.025	1.001	32.530	3699
691	105.307	108.492		0.16	0.16	1.32	1.01	0.36	80	80	67	2.70	1.50	71	0.045	102	97	19.7	-0.33	4.00	15.422965	113.2	168.4	141.7	52.2	165.4	167	69	68	67	0.024	1.001	33.344	3778
692	105.467	108.649		0.16	0.16	1.32	1.01	0.36	80	80	67	2.70	1.50	71	0.044	103	98	19.4	0.33	3.88	15.4144182	112.3	167.5	140.9	52.2	164.5	165	69	68	67	0.023	1.001	32.380	3640
693	105.628	108.805		0.16	0.16	1.32	1.01	0.36	80	80	67	2.70	1.50	71	0.044	104	98	19.6	-0.20	3.86	15.4795265	111.7	166.9	140.6	52.2	163.9	163	68	68	67	0.022	1.001	32.215	3602
694	105.788	108.962		0.16	0.16	1.32	1.01	0.36	80	80	67	2.70	1.50	71	0.045	102	97	20.0	-0.36	3.83	15.5247641	110.8	166.1	140.0	52.2	163.0	161	68	68	67	0.022	1.001	31.953	3546
695	105.949	109.118		0.16	0.16	1.31	1.01	0.36	80	80	67	2.71	1.50	71	0.045	103	97	20.0	-0.01	3.84	15.4700146	110.3	165.6	139.5	52.2	162.5	159	68	68	67	0.022	1.001	32.057	3539
696	106.110	109.275		0.16	0.16	1.31	1.01	0.36	80	80	67	2.71	1.50	71	0.044	104	98	19.6	0.40	3.88	15.4520407	109.6	164.9	138.9	52.2	161.8	157	68	68	67	0.022	1.001	32.371	3552
697	106.270	109.430		0.16	0.16	1.32	1.01	0.36	80	80	67	2.71	1.50	71	0.046	101	95	20.1	-0.49	3.94	15.508359	108.9	164.1	138.4	52.2	161.1	156	68	68	67	0.021	1.001	32.864	3583
698	106.431	109.587		0.16	0.16	1.32	1.01	0.36	80	80	67	2.71	1.50	71	0.043	105	100	19.9	0.19	3.80	15.4737215	108.3	163.5	137.9	52.2	160.5	154	68	68	67	0.021	1.001	31.724	3438
699	106.591	109.743		0.16	0.16	1.31	1.01	0.36	80	80	67	2.72	1.60	79	0.045	103	97	19.8	0.12	3.94	15.5177059	107.6	162.8	137.3	52.2	159.8	161	68	68	67	0.044	1.001	32.857	3538
700	106.751	109.899		0.16	0.16	1.31	1.00	0.36	80	80	67	2.73	1.60	88	0.044	105	99	17.7	2.08	3.88	15.4479752	106.8	162.0	136.8	52.2	159.0	194	69	69	67	0.038	1.001	32.395	3464
701	106.911	110.054		0.16	0.16	1.31	1.01	0.36	80	80	67	2.73	1.60	92	0.042	108	101	17.5	0.17	3.94	15.5566292	106.5	161.7	136.5	52.2	158.6	217	69	69	67	0.040	1.001	32.867	3503
702	107.071	110.211		0.16	0.16	1.33	1.02	0.36	80	80	67	2.72	1.60	95	0.044	105	101	15.9	1.63	3.90	15.4895554	106.1	161.2	136.3	52.2	158.2	234	69	68	67	0.038	1.001	32.548	3456
703	107.231	110.366		0.16	0.16	1.33	1.01	0.36	80	80	67	2.72	1.60	97	0.044	106	100	15.4	0.51	3.88	15.4612303	106.5	161.7	136.6	52.2	158.7	244	70	69	67	0.040	1.001	32.375	3451
704	107.391	110.523		0.16	0.16	1.32	1.02	0.36	80	80	67	2.71	1.60	99	0.042	108	103	15.0	0.40	4.04	15.3644457	106.4	161.7	136.5	52.2	158.6	250	70	69	67	0.045	1.001	33.671	3586
705	107.551	110.678		0.16	0.16	1.32	1.02	0.36	80	80	67	2.71	1.60	100	0.042	108	102	13.9	1.13	3.88	15.4484644	106.6	161.9	136.6	52.2	158.8	255	70	69	67	0.044	1.001	32.374	3457
706	107.711	110.834		0.16	0.16	1.33	1.02	0.36	80	80	67	2.72	1.60	101	0.041	110	104	12.6	1.31	3.94	15.4526443	107.0	162.4	136.9	52.2	159.2	259	71	69	67	0.043	1.001	32.857	3522
707	107.871	110.990		0.16	0.16	1.33	1.01	0.36	80	80	67	2.72	1.60	102	0.046	104	98	12.8	-0.25	3.90	15.4653091	107.4	162.6	137.1	52.2	159.6	261	71	70	67	0.041	1.001	32.537	3499
708	108.031	111.146		0.16	0.16	1.33	1.02	0.36	80	80	67	2.72	1.60	102	0.044	106	101	12.2	0.60	3.92	15.5701141	107.9	163.2	137.5	52.2	160.1	263	71	70	67	0.045	1.001	32.700	3532
709	108.191	111.302		0.16	0.16	1.32	1.01	0.36	80	80	67	2.71	1.60	103	0.047	103	97	11.8	0.45	4.00	15.5052595	108.6	163.8	138.1	52.2	160.9	264	71	70	67	0.040	1.001	33.327	3625
710	108.351	111.458		0.16	0.16	1.32	1.01	0.36	80	80	67	2.72	1.60	103	0.045	105	100	11.5	0.29	3.90	15.4028139	109.2	164.4	138.6	52.2	161.4	266	71	70	67	0.043	1.001	32.543	3558
711	108.512	111.613		0.16	0.16	1.33	1.01	0.36	80	80	67	2.73	1.60	103	0.045	106	99	10.5	0.98	3.98	15.4268885	110.1	165.3	139.3	52.2	162.3	267	72	70	67	0.042	1.001	33.170	3655
712	108.672	111.769		0.16	0.16	1.32	1.01	0.36	80	80	67	2.73	1.60	104	0.042	109	103	9.5	0.93	3.91	15.4698477	110.6	165.9	139.7	52.2	162.8	268	72	70	67	0.043	1.001	32.574	3607
713	108.832	111.925		0.16	0.16	1.33	1.01	0.36	80	80	67	2.72	1.60	104	0.040	111	106	9.1	0.45	3.94	15.4816656	111.2	166.6	140.1	52.2	163.4	269	72	71	67	0.047	1.001	32.845	3658
714	108.992	112.081		0.16	0.16	1.33	1.01	0.36	80	80	67	2.73	1.60	104	0.042	109	103	7.8	1.34	3.98	15.3734779	111.9	167.2	140.6	52.2	164.1	269	72	71	67	0.043	1.001	33.172	3717
715	109.152	112.236		0.16	0.16	1.32	1.01	0.36	80	80	67	2.72	1.60	104	0.043	107	101	7.5	0.28	3.82	15.4614983	112.6	167.9	141.1	52.2	164.8	270	72	71	67	0.042	1.001	31.891	3594
716	109.312	112.393		0.16	0.16	1.31	1.01	0.36	80	80	67	2.72	1.60	104	0.042	109	104	6.7	0.81	3.92	15.5464926	113.3	168.6	141.7	52.2	165.5	270	72	71	67	0.046	1.001	32.697	3709
717	109.471	112.548		0.16	0.16	1.31	1.01	0.36	80	80	67	2.72	1.60	105	0.044	106	100	6.3	0.38	3.86	15.4318056	113.9	169.3	142.0	52.2	166.1	271	73	71	67	0.045	1.001	32.216	3672
718	109.631	112.704		0.16	0.16	1.32	1.01	0.36	80	80	67	2.73	1.60	105	0.045	105	100	5.7	0.57	3.92	15.46521	114.5	169.9	142.8	52.2	166.8	272	73	71	67	0.046	1.001	32.704	3751
719	109.791	112.859		0.16	0.16	1.32	1.01	0.36	80	80	67	2.73	1.60	105	0.041	110	104	5.6	0.17	3.92	15.4293633	115.3	170.7	143.3	52.2	167.5	272	73	71	67	0.046	1.001	32.712	3777
720	109.950	113.015		0.16	0.16	1.32	1.01	0.36	80	80	67	2.72	1.60	105	0.042	108	103	4.3	1.21	3.90	15.5081358	116.0	171.4	143.8	52.2	168.2	273	73	72	67	0.042	1.001	32.538	3778
721	110.110	113.170		0.16	0.16	1.32	1.01	0.36	80	80	67	2.73	1.60	105	0.046	104	98	3.9	0.41	3.90	15.5174828	116.6	172.0	144.4	52.2	168.8	274	73	72	67	0.045	1.001	32.527	3798
722	110.270	113.326		0.16	0.16	1.32	1.01	0.36	80	80	67	2.71	1.60	105	0.041	110	105	3.9	0.05	4.02	15.5085611	117.4	172.8	145.0	52.2	169.7	274	73	72	67	0.044	1.001	33.501	3939
723	110.430	113.481		0.16	0.16	1.32	1.01	0.36	80	80	67	2.73	1.60	106	0.042	109	103	2.6	1.26	3.80	15.4994707	117.9	173.2	145.3	52.2	170.1	276	73	72	67	0.045	1.001	31.720	3744
724	110.590	113.637		0.16	0.16	1.32	1.01	0.36	80	80	67	2.73	1.60	106	0.042	109	103	2.0	0.66	3.94	15.4520559	118.5	173.9	145.7	52.2	170.7	277	73	72	67	0.046	1.001	32.863	3900
725	110.750	113.792		0.16	0.16	1.33	1.01	0.36	80	80	67	2.72	1.60	106	0.043	108	102	1.0	0.93	3.49	15.4614382	119.6	174.4	148.7	52.2	171.9	278	74	72	67	0.043	1.001	29.139	3490
726	110.910	113.948		0.16	0.16	1.32	1.01	0.36	80	80	67	2.72	1.60	106	0.042	109	103	0.5	0.57	3.53	15.4988804	120.9	175.7	150.1	52.3	173.2	279	74	72	67	0.047	1.001	29.461	3566
727	111.070	114.103		0.16	0.16	1.32	1.01	0.36	80	80	67	2.73	1.60	106	0.044	106	100	0.1	0.31	3.40	15.4319477	121.4	176.2	150.6	52.3	173.8	280	74	72	67	0.045	1.001	28.341	3446
728	111.229	114.259	214.95	0.16	0.16	1.32	1.01	0.36	80	80	67	2.73	1.60	106	0.041	110	105	0.0	0.15	3.38	15.4333878	122.3	177.1	151.2	52.3	174.6	281	74	72	67	0.046	1.001	28.175	3450
	111.229	114.259	214.950			1.31	1.02	0.36	80	80	68			90	0.044					3.13	15.46	118.1	172.5	150.4	52.5	170.6		70.94	70.22		0.04				3086
																																	TOTAL:	2246710

TF_{avg} 164.166

Elapsed Time	Particulate Sampling Data																Fuel Weight, lb		Flow, gpm		Temperature Data, oF														
	Gas Meter Cubic Feet (1)	Gas Meter Cubic Feet (2)	Gas Meter Cubic Feet (amb)	Sample Rate, cfm (1)	Sample Rate, cfm (2)	Orifice dH (1)	Orifice dH (2)	Orifice dH (amb)	Meter oF (1)	Meter oF (2)	Meter oF (amb)	Meter Vac. In. Hg. (1)	Meter Vac. In. Hg. (2)	Dilution Tunnel Temp.	Dilution Tunnel dP	Pro. Rate (%) (1)	Pro. Rate (%) (2)	Scale Reading	Weight Change	Load Side Liquid Flow Rate	Boiler Side Liquid Flow Rate (optional)	Thermopile ΔT	Boiler to Heat Exch. Temp.	Heat Exch to Boiler Temp.	Inlet Load Temp.	Outlet Load Temp.	Stack	Filter (1)	Filter (2)	Ambient	Stack Draft	Specific Heat of Inlet Water (BTU/lb-°F)	Mass Flow Rate of Inlet Water (lb/min)	Heat Output, Btu
																						TI_{avg}	151.240											

Hydronic Heating Appliances - Test Method ASTM 2618
Results

Manufacturer: Central Boiler - WoodMaste
Model: Edge 960 - CleanFire 900
Tracking No.: 2430
Project No.: 0117WB041E
Run #: 2
Date: 12/10/20

Equipment Numbers:

TRAIN 1 (First Hour emissions)

Sample Component	Reagent	Filter, Probe or Dish #	Weights		
			Final, mg	Tare, mg	Particulate, mg
B. Front filter catch	Filter	E137	120.5	119.6	0.9
C. Rear filter catch	Filter	E138	120.0	119.9	0.1
D. Probe catch*	Probe	8	115598.4	115597.4	1.0
E. Filter seals catch*	Seals	S050	3363.8	3363.3	0.5

Sub-Total Total Particulate, mg: 2.5

TRAIN 1 (Post First Hour Change-out)

Sample Component	Reagent	Filter, Probe or Dish #	Weights		
			Final, mg	Tare, mg	Particulate, mg
B. Front filter catch (remainder)	Filter	E139	130.6	120.4	10.2
C. Rear filter catch	Filter	E140	119.5	120.2	-0.7
D. Probe catch*	Probe	15	114344.3	114342.2	2.1
E. Filter seals catch*	Seals	S048	3381.0	3378.0	3.0

Sub-Total Total Particulate, mg: 14.6

Train 1 Aggregate Total Particulate, mg: 17.1

TRAIN 2

Sample Component	Reagent	Filter, Probe or Dish #	Weights		
			Final, mg	Tare, mg	Particulate, mg
A. Front filter catch	Filter	E141	128.7	119.2	9.5
B. Rear filter catch	Filter	E142	120.7	120.3	0.4
C. Probe catch*	Probe	16	114270.0	114266.9	3.1
D. Filter seals catch*	Seals	S049	3332.3	3329.1	3.2

Total Particulate, mg: 16.2

AMBIENT

Sample Component	Reagent	Filter # or Probe #	Weights		
			Final, mg	Tare, mg	Particulate, mg
A. Front filter catch*	Filter	E143	119.2	119.0	0.2

Total Particulate, mg: 0.2

*Particulate catch that results in a negative number, is assumed to be zero for probes and seals, negative numbers for filters are assumed to be part of the seal weight.

Component	Equations:
A. Front filter catch	Final (mg) - Tare (mg) = Particulate, mg
B. Rear filter catch	Final (mg) - Tare (mg) = Particulate, mg
C. Probe catch	Final (mg) - Tare (mg) = Particulate, mg

OMNI-Test Laboratories, Inc. **ASTM E2780 Wood Heater Run Sheets**

Client: Central Boiler WoodMaster Project Number: 0117WB041E Run Number: 2

Model: Edge 960 CleanFire 900 Tracking Number: 2430 Date: 12/10/2020

Test Crew: Bruce Davis, Tony Tong

OMNI Equipment ID numbers:

Wood Heater Supplemental Data

Start Time: 15:58 12/10 Booth #: 3

Stop Time: 0426 12/11

Stack Gas Leak Check:

Initial: good Final: good

Sample Train Leak Check:

A: 0.00 @ 14 "Hg

B: 0.00 @ 9 "Hg

Calibrations: Span Gas CO_2: 16.94 % CO: 4.32 %

	Pre Test		Post Test	
	Zero	Span	Zero	Span
Time	15:20	15:22	4:17	0421
CO_2	~~16.94~~ 0.00	17.02	-0.04	17.03
CO	0.000	4.322	-0.008	4.3274

Air Velocity (ft/min): Initial: <50 Final: <50

Scale Audit (lbs): Initial: 10 Final: 10.0

Pitot Tube Leak Test: Initial: good Final: good

Stack Diameter (in): 8

Induced Draft: 0.00

% Smoke Capture: 100

Flue Pipe Cleaned Prior to First Test in Series:

Date: 12/8/20 Initials: DC

0120

	Initial	Middle	Ending
P_b (in/Hg)	30.09	30.14	3.18
RH (%)			
Ambient (°F)	66	67	67

Tunnel Traverse

Microtector Reading	dP (in H_2O)	T(°F)
1	.041	71
2	.052	71
3	.054	71
4	.052	71
5	.048	71
6	.038	71
1	.038	71
2	.046	71
3	.050	71
4	.058	71
5	.050	71
6	.038	71
Center:		
	.044	71

Tunnel Static Pressure (in H_2O):	
Beginning of Test	End of Test
-.498	-.498

Background Filter Volume: 214.950

Technician Signature: Date: 12/10/20

OMNI-Test Laboratories, Inc. **ASTM E2780 Wood Heater Run Sheets**

Client: Central Boiler WoodMaster Project Number: 0117WB041E Run Number: 2
Model: Edge 960 CleanFire 900 Tracking Number: 2430 Date: 12/10/2020
Test Crew: Bruce Davis, Tony Tong
OMNI Equipment ID numbers:

Wood Heater Run Notes

Air Control Settings

Primary:

Automatic
Demand Temp 165-185° F

Secondary: Fixed

Tertiary/Pilot: N/A

Fan: Automatic

Preburn Notes

Time	Notes
0	operated @ CAT III entire test.

Test Notes

Sketch test fuel configuration:

See Photo

Start up procedures & Timeline:

Bypass: Not used
Fuel loaded by: 3.5 minutes
Door closed at: 4:00 minutes
Primary air: Automatic

Notes:

Time	Notes
01:00	First hour filters changed

Technician Signature: [signature] Date: 12/10/20

OMNI-Test Laboratories, Inc.

Manufacturer: Central Boiler, WoodMaster
Model: Edge 960, CleanFire 900
Date: 12/10/20
Run: 2
Control #: 0117WB041E
Test Duration: 728
Output Category: III

Technicians: B. Davis

Test Results in Accordance with CSA B415.1-09

	HHV Basis	LHV Basis
Overall Efficiency	84.2%	90.1%
Combustion Efficiency	99.2%	99.2%
Heat Transfer Efficiency	85%	90.8%

Output Rate (kJ/h)	202,578	192,167	**(Btu/h)**
Burn Rate (kg/h)	12.04	26.53	**(lb/h)**
Input (kJ/h)	240,461	228,104	**(Btu/h)**

Test Load Weight (dry kg)	146.08	321.95	**dry lb**
MC wet (%)	17.49		
MC dry (%)	21.20		
Particulate (g)	70.12		
CO (g)	1,764		
Test Duration (h)	12.13		

Emissions	**Particulate**	**CO**
g/MJ Output	N/A	0.72
g/kg Dry Fuel	N/A	12.08
g/h	N/A	145.42
lb/MM Btu Output	N/A	1.67

Air/Fuel Ratio (A/F)	8.00

VERSION: **2.3** **3/23/2010**

VERSION: 2.3 3/23/2010

Manufacturer: Central Boiler, WoodMaster
Model: Edge 960, CleanFire 900
Date: 12/10/2020
Run: 2
Control #: 0117WB041E
Test Duration: 728
Output Category: III

Appliance Type: Non-Cat

Temp. Units F (F or C)
Weight Units lb (kg or lb)

Wood Moisture (% wet): 17.49
Load Weight (lb wet): 390.20
Burn Rate (dry kg/h): 12.04
Total Particulate Emissions: 70.12 g

Fuel Data

	Maple	
HHV	19,973	kJ/kg
%C	50.64	
%H	6.02	
%O	41.74	
%Ash	1.35	

Averages	**0.99**	**12.84**	**#DIV/0!**	**228.25**	**67.51**	
					Temp. (ºF)	
Elapsed Time (min)	**Fuel Weight Remaining (lb)**	**Flue Gas Composition (%) CO**	**CO_2**	**O_2**	**Flue Gas**	**Room Temp**
0	390.20	0.07	17.09		254.0	66.0
1	388.40	0.05	15.77		220.0	66.0
2	386.90	0.03	9.46		202.0	66.0
3	385.99	0.02	8.59		216.0	66.0
4	383.65	4.76	17.33		251.0	66.0
5	381.86	3.67	18.21		270.0	66.0
6	380.58	2.23	18.96		278.0	66.0
7	379.88	0.16	19.06		271.0	66.0
8	379.04	0.07	17.04		281.0	66.0
9	377.00	0.09	18.51		278.0	65.0
10	376.31	0.08	16.80		285.0	65.0
11	374.64	0.09	17.75		285.0	65.0
12	373.90	0.08	17.04		287.0	65.0
13	372.14	0.08	17.26		290.0	65.0
14	370.46	0.08	17.20		291.0	64.0
15	369.77	0.08	17.04		292.0	64.0
16	368.32	0.07	16.80		292.0	64.0
17	367.47	0.07	16.49		293.0	64.0
18	365.75	0.07	16.77		294.0	63.0
19	364.97	0.07	16.77		295.0	63.0
20	364.07	0.07	16.69		296.0	63.0
21	362.09	0.07	16.62		296.0	63.0

22	361.26	0.07	16.32		297.0	63.0
23	360.11	0.07	16.06		298.0	63.0
24	359.09	0.07	16.72		298.0	63.0
25	357.66	0.07	15.97		300.0	63.0
26	356.43	0.07	16.70		299.0	63.0
27	354.99	0.07	16.26		300.0	63.0
28	354.32	0.07	16.30		300.0	64.0
29	352.79	0.06	16.32		301.0	64.0
30	351.55	0.06	16.36		301.0	65.0
31	350.39	0.07	16.45		302.0	66.0
32	349.05	0.06	16.50		303.0	67.0
33	348.56	0.06	16.50		303.0	67.0
34	347.01	0.06	16.48		300.0	67.0
35	345.49	0.06	15.91		302.0	68.0
36	344.78	0.06	16.30		300.0	69.0
37	343.17	0.05	15.81		302.0	69.0
38	342.72	0.06	16.18		304.0	69.0
39	342.17	0.06	16.46		275.0	69.0
40	341.23	0.04	13.33		253.0	70.0
41	341.77	0.02	9.98		241.0	70.0
42	341.38	0.01	9.25		232.0	71.0
43	341.69	0.01	7.03		227.0	71.0
44	341.63	0.02	5.41		223.0	72.0
45	341.48	0.01	5.86		219.0	72.0
46	341.25	0.01	4.66		216.0	72.0
47	341.84	0.02	3.95		213.0	72.0
48	341.66	0.02	3.47		210.0	73.0
49	342.11	0.02	2.83		210	73
50	342.04	0.02	2.33		210	74
51	342.17	0.01	1.85		208	74
52	340.84	0.02	1.56		206	73
53	341.72	0.03	1.56		204	73
54	341.72	0.03	1.38		201	73
55	341.58	0.04	1.39		198	73
56	341.40	0.04	1.42		196	73
57	341.30	0.05	1.48		193	73
58	340.94	0.06	1.63		191	73
59	341.54	0.06	1.63		188	73
60	341.24	0.07	1.85		186	73
61	341.28	0.07	1.88		183	73
62	341.83	0.09	2.07		181	73
63	341.51	0.07	1.74		178	72

64	341.83	0.08	1.86		176	72
65	341.65	0.08	1.85		174	72
66	341.62	0.08	1.77		172	72
67	342.14	0.08	1.84		170	72
68	341.94	0.09	1.86		168	71
69	341.91	0.09	1.93		166	71
70	342.00	0.09	1.85		164	71
71	342.09	0.09	1.82		162	71
72	342.02	0.09	1.81		159	71
73	342.29	0.08	1.63		158	71
74	342.40	0.09	1.71		157	71
75	342.09	0.09	1.69		155	71
76	342.23	0.1	1.74		153	71
77	342.04	0.1	1.75		152	70
78	342.30	0.1	1.75		150	70
79	342.16	0.09	1.65		149	70
80	342.23	0.1	1.69		147	70
81	342.29	0.1	1.69		146	70
82	342.15	0.09	1.58		144	70
83	342.59	0.1	1.64		143	70
84	342.35	0.1	1.59		142	70
85	342.46	0.11	1.78		141	70
86	342.74	0.11	1.78		140	70
87	342.18	0.11	1.76		138	70
88	342.12	0.1	1.69		137	70
89	342.45	0.11	1.76		136	70
90	342.16	0.11	1.67		135	69
91	342.30	0.1	1.6		143	69
92	340.94	1.06	7.88		192	69
93	339.96	0.5	15.94		225	69
94	338.40	0.08	17.2		250	69
95	336.98	0.07	17.46		264	69
96	335.60	0.08	17.78		273	69
97	334.76	0.09	17.87		282	69
98	333.46	0.1	18.22		285	69
99	332.34	0.07	17.68		288	69
100	330.47	0.09	17.88		286	69
101	329.88	0.07	17.79		291	69
102	328.42	0.08	17.88		290	69
103	326.68	0.07	17.54		290	69
104	325.53	0.07	17.57		291	69
105	323.92	0.07	17.36		295	69

106	323.06	0.07	17.39		294	69
107	321.55	0.07	17.33		298	69
108	319.65	0.07	17.57		297	69
109	317.97	0.07	17.34		298	69
110	317.57	0.06	17.17		297	69
111	316.15	0.06	17.08		299	69
112	315.16	0.06	17.13		298	69
113	314.22	0.05	17.35		296	69
114	312.19	0.05	16.84		300	69
115	311.29	0.06	17.12		299	69
116	309.40	0.05	16.65		300	69
117	308.19	0.05	16.64		303	69
118	306.96	0.06	16.78		303	68
119	305.02	0.06	16.8		300	69
120	303.75	0.06	16.77		302	69
121	302.57	0.06	16.75		305	69
122	301.55	0.06	16.69		306	69
123	299.43	0.06	16.41		306	69
124	298.70	0.06	16.29		305	69
125	297.02	0.06	16.37		309	69
126	296.65	0.06	16.51		308	69
127	294.06	0.06	16.31		311	69
128	292.96	0.06	16.03		312	69
129	292.05	0.06	16.03		312	69
130	291.09	0.04	14.01		273	69
131	290.21	0.02	12.84		254	69
132	290.29	0.02	11.43		241	68
133	290.16	0.02	10.33		232	69
134	289.47	0.11	7.18		228	69
135	290.06	0.12	11.24		223	69
136	289.82	0.03	9.87		219	68
137	289.21	0.02	8.05		215	69
138	289.28	0.02	7.47		212	68
139	290.15	0.04	6.14		209	68
140	289.56	0.05	5.06		211	69
141	289.64	0.04	4.32		210	69
142	289.59	0.1	4.07		208	68
143	289.40	0.23	4.7		206	69
144	289.59	0.33	5.04		203	68
145	290.32	0.38	4.94		200	68
146	289.76	0.41	4.98		198	68
147	290.07	0.39	4.59		195	68

148	290.14	0.42	4.69		192	68
149	290.59	0.45	4.88		189	68
150	290.50	0.41	4.49		186	68
151	289.65	0.37	4.1		184	68
152	290.11	0.32	3.67		181	68
153	290.49	0.34	3.86		179	68
154	290.04	0.29	3.45		177	68
155	290.40	0.31	3.64		174	68
156	290.20	0.29	3.45		172	68
157	290.16	0.27	3.33		170	68
158	290.56	0.25	3.13		168	68
159	290.64	0.25	3.12		166	68
160	290.62	0.25	3.09		164	68
161	290.87	0.22	2.74		162	68
162	290.68	0.22	2.71		160	68
163	290.59	0.22	2.76		158	68
164	290.63	0.22	2.81		156	68
165	290.89	0.2	2.49		154	68
166	290.70	0.2	2.46		153	68
167	291.05	0.2	2.42		152	68
168	291.10	0.2	2.5		150	68
169	291.03	0.18	2.25		149	68
170	291.13	0.17	2.19		147	68
171	290.69	0.17	2.14		145	68
172	291.05	0.18	2.17		144	68
173	291.07	0.17	2.05		142	68
174	291.01	0.18	2.16		141	68
175	291.13	0.17	2.07		140	68
176	291.14	0.16	2		139	68
177	291.14	0.17	2.02		137	68
178	291.12	0.17	1.98		136	68
179	291.07	0.16	1.89		135	68
180	291.11	0.15	1.84		134	68
181	290.92	0.15	1.8		132	68
182	291.60	0.17	1.99		131	68
183	291.13	0.16	1.86		130	68
184	290.73	0.16	1.84		142	68
185	289.81	1.2	8.72		189	68
186	288.70	1.64	14.16		221	68
187	287.34	0.45	14.91		241	68
188	287.09	0.15	15.17		255	68
189	284.87	0.08	15.74		265	68

190	284.33	0.08	15.93		274	68
191	283.24	0.09	16.63		279	68
192	281.52	0.09	16.83		284	68
193	280.36	0.09	17.08		289	68
194	278.68	0.09	17.37		293	68
195	276.96	0.1	17.73		297	68
196	275.38	0.1	17.68		297	68
197	274.56	0.11	17.79		299	68
198	272.37	0.1	17.58		300	68
199	271.96	0.09	17.48		300	68
200	269.96	0.08	17.39		301	68
201	268.80	0.08	17.34		303	68
202	266.93	0.07	17.35		304	68
203	265.56	0.08	17.34		305	68
204	264.47	0.08	17.41		306	68
205	262.84	0.1	17.74		303	68
206	261.46	0.11	18.17		303	68
207	259.66	0.09	17.53		306	68
208	258.10	0.08	17.49		305	68
209	256.24	0.09	17.86		299	68
210	254.93	0.08	17.17		306	68
211	253.89	0.07	17.19		304	68
212	252.29	0.08	17.72		304	68
213	250.48	0.07	17.22		307	68
214	249.18	0.07	17.01		311	68
215	247.95	0.07	17.29		308	68
216	246.25	0.07	17.19		308	68
217	244.88	0.06	16.69		311	68
218	243.68	0.06	16.9		311	68
219	242.61	0.07	17.15		311	68
220	241.03	0.06	16.75		312	68
221	239.79	0.06	16.83		311	68
222	237.62	0.07	16.88		312	68
223	236.66	0.06	16.42		313	68
224	235.73	0.07	16.73		309	68
225	234.21	0.06	16.32		273	68
226	233.61	0.43	20.75		255	68
227	232.62	0.59	20.68		242	68
228	232.77	1.26	20.78		233	68
229	232.72	0.18	17.73		228	68
230	232.10	2.11	20.68		223	68
231	231.96	1.3	19.72		218	68

232	231.74	0.89	17.53		215	68
233	231.23	1.34	17.43		212	68
234	231.63	0.65	15.17		209	68
235	231.64	0.28	13.26		210	68
236	231.34	1	13.88		209	68
237	231.28	3.23	17.02		207	68
238	231.74	4.95	19.09		205	68
239	231.43	5.2	19.49		203	68
240	231.44	5.2	19.04		200	68
241	231.32	5.2	17.41		197	68
242	231.56	5.2	16.96		195	68
243	231.54	5.2	15.61		192	67
244	231.40	5.11	14.91		189	68
245	231.05	4.99	14.6		187	68
246	231.53	4.82	13.98		184	68
247	231.48	4.65	13.68		182	68
248	231.55	4.22	12.62		179	68
249	231.69	4.28	12.97		177	68
250	231.92	3.78	11.81		174	68
251	231.54	3.48	11.13		173	68
252	231.94	3.08	10.16		170	68
253	231.86	3.12	10.52		168	68
254	232.13	2.99	10.3		166	68
255	232.02	2.88	10.12		164	68
256	231.99	2.76	10.01		163	67
257	231.82	2.66	9.78		161	67
258	231.48	2.69	9.94		159	67
259	232.08	2.53	9.58		157	68
260	231.93	2.29	8.87		155	67
261	232.09	2.45	9.49		154	67
262	231.64	2.28	9.05		153	67
263	231.67	2.15	8.75		151	67
264	232.43	2.03	8.39		149	67
265	232.22	2.15	8.89		148	67
266	231.61	2.14	8.89		147	67
267	232.15	1.93	8.21		145	67
268	232.04	2	8.66		144	67
269	232.41	2	8.74		143	67
270	232.00	1.79	8		141	67
271	232.24	1.94	8.61		141	67
272	231.98	1.8	8.24		140	67
273	231.94	1.99	9.16		139	67

274	232.26	1.78	8.32		137	67
275	231.79	1.69	8.06		137	67
276	232.40	1.59	7.73		138	67
277	231.49	1.73	12.99		189	67
278	229.96	1.25	12.1		218	67
279	229.22	0.2	13.75		239	67
280	227.72	0.06	14.51		253	67
281	227.78	0.06	14.8		262	67
282	226.41	0.06	14.99		270	67
283	224.98	0.07	15.57		276	67
284	223.76	0.07	15.92		280	67
285	222.50	0.08	16.08		284	67
286	221.38	0.09	16.4		287	67
287	220.11	0.09	16.58		290	67
288	218.82	0.09	16.61		293	67
289	217.16	0.09	16.93		296	67
290	215.96	0.09	17.16		299	67
291	214.63	0.09	17.08		298	67
292	213.57	0.1	17.29		301	67
293	212.37	0.1	17.28		295	67
294	210.15	0.1	17.07		299	67
295	208.93	0.09	17.13		302	67
296	207.39	0.09	17.34		304	67
297	206.50	0.09	17.01		302	67
298	204.97	0.08	16.78		300	67
299	203.78	0.08	17.23		306	67
300	201.91	0.08	17.36		304	67
301	200.23	0.11	17.76		304	67
302	199.10	0.09	17.43		307	67
303	197.97	0.08	17.16		308	67
304	196.25	0.08	17.18		309	67
305	194.97	0.08	17.09		309	67
306	192.58	0.09	17.29		310	67
307	192.33	0.09	17.17		311	67
308	190.60	0.09	17.04		310	67
309	189.13	0.09	16.92		313	67
310	187.86	0.08	16.32		312	67
311	186.35	0.08	16.79		312	67
312	184.77	0.08	17.18		312	67
313	183.47	0.08	16.83		313	67
314	182.83	0.06	16.37		306	67
315	182.45	0.04	13.38		272	67

316	180.51	0.17	16.84		255	67
317	180.47	0.21	17.72		243	67
318	180.16	0.11	16.99		235	67
319	180.26	0.04	12.59		230	67
320	179.64	2.46	20.58		224	67
321	179.62	1.57	19.65		220	67
322	179.60	1.07	18.08		216	67
323	178.81	1.39	17.57		213	67
324	178.82	0.79	16.22		210	67
325	178.79	0.45	14.56		211	67
326	178.88	2.09	16.1		210	67
327	178.90	5.01	19.74		208	67
328	178.80	5.2	20.78		206	67
329	178.51	5.2	20.78		203	67
330	178.93	5.2	20.78		200	67
331	178.86	5.2	20.3		198	67
332	179.23	5.2	20.24		195	67
333	178.82	5.2	19.79		192	67
334	179.17	5.2	19.91		190	67
335	179.17	5.2	17.99		187	67
336	179.11	5.2	17.78		185	67
337	178.45	5.2	16.28		182	67
338	179.48	5.2	16.15		180	67
339	179.22	4.97	14.56		178	67
340	179.15	4.88	14.44		175	67
341	178.82	4.51	13.62		173	67
342	179.02	4.46	13.55		171	67
343	179.46	4.2	13.12		169	67
344	179.48	4.11	13.05		167	67
345	179.28	3.89	12.64		165	67
346	179.60	3.64	12.18		163	67
347	179.79	3.47	11.84		161	67
348	179.55	3.4	11.78		160	67
349	179.28	3.39	11.95		158	67
350	179.59	3.14	11.41		156	67
351	178.80	3.13	11.49		155	67
352	178.90	2.95	11.15		153	67
353	179.57	3	11.53		152	67
354	180.60	2.62	10.42		151	67
355	179.68	2.48	10.11		150	67
356	179.58	2.6	10.72		147	67
357	179.85	2.61	10.91		147	67

358	179.34	2.66	11.31		146	67
359	179.83	2.54	11.04		145	67
360	179.25	2.53	11.15		144	67
361	179.65	2.5	11.22		142	67
362	179.67	2.5	11.42		141	67
363	179.72	2.38	11.02		141	67
364	179.58	2.42	11.31		141	67
365	179.23	2.29	10.91		139	67
366	179.37	2.35	11.2		139	67
367	179.68	2.25	10.94		138	67
368	179.62	2.29	11.23		138	67
369	179.71	2.28	11.31		169	67
370	177.90	1.25	11.17		203	67
371	176.84	0.7	11.7		226	67
372	175.49	0.12	13.78		243	67
373	175.02	0.08	13.9		252	67
374	173.39	0.08	13.94		259	67
375	172.37	0.07	14.16		265	67
376	172.41	0.07	15.37		271	67
377	171.97	0.06	15.37		273	67
378	170.28	0.06	15.57		277	67
379	169.71	0.06	15.92		282	67
380	168.29	0.07	16.36		286	67
381	166.93	0.07	16.4		288	67
382	165.75	0.07	16.38		291	67
383	164.33	0.08	16.57		293	67
384	163.22	0.08	16.74		296	67
385	161.99	0.09	16.94		299	67
386	161.17	0.09	17.33		301	67
387	159.45	0.09	17.55		303	67
388	158.13	0.09	17.12		303	67
389	156.94	0.08	16.88		304	67
390	156.05	0.1	17.41		305	67
391	154.61	0.09	17.02		305	67
392	152.71	0.09	16.88		305	67
393	151.81	0.09	16.7		306	67
394	150.37	0.09	16.94		307	67
395	148.85	0.09	16.77		308	67
396	147.81	0.1	17.08		310	67
397	146.68	0.1	17.31		308	67
398	144.68	0.1	17.34		307	67
399	144.26	0.09	17.27		310	67

400	142.23	0.09	17.14		312	67
401	141.43	0.09	17.28		309	67
402	140.30	0.09	17.44		310	67
403	139.07	0.09	17.19		312	67
404	137.91	0.08	17.23		309	67
405	136.72	0.11	18.14		297	67
406	135.71	0.04	15.78		269	67
407	135.10	0.1	18.45		253	67
408	134.88	0.19	19.66		242	67
409	134.63	0.08	18.14		235	67
410	134.01	0.07	14.13		229	67
411	133.49	2.74	20.71		224	67
412	133.30	1.87	20.41		219	67
413	133.09	1.38	19.56		216	67
414	133.24	1.43	19.08		212	67
415	133.16	0.97	17.68		211	67
416	133.10	0.66	16.25		211	67
417	133.14	3.13	18.8		209	67
418	132.74	5.2	20.78		207	67
419	132.78	5.2	20.78		205	67
420	133.03	5.2	20.78		202	67
421	133.09	5.2	20.78		200	67
422	132.59	5.2	20.78		197	67
423	132.57	5.2	20.78		194	67
424	133.01	5.2	20.17		191	67
425	132.71	5.2	18.81		189	67
426	133.05	5.2	17.13		186	67
427	132.78	5.19	16.35		183	67
428	133.17	4.59	14.76		181	67
429	133.16	4.39	14.3		178	67
430	132.81	4.07	13.46		176	67
431	133.13	3.92	13.17		174	67
432	132.81	3.74	12.76		172	67
433	133.34	3.24	11.52		170	67
434	133.27	3.03	11.05		168	67
435	133.21	2.89	10.7		166	67
436	133.12	2.47	9.51		163	67
437	133.25	2.53	9.69		161	67
438	133.15	2.3	9.13		160	67
439	133.05	2.3	9.27		158	67
440	133.03	2.1	8.64		157	67
441	132.82	2.05	8.58		155	67

442	133.19	1.91	8.11		153	67
443	133.15	1.82	7.91		151	67
444	133.04	1.72	7.64		150	67
445	133.47	1.66	7.51		148	67
446	133.02	1.34	6.47		146	67
447	133.33	1.16	5.73		145	67
448	133.04	1.08	5.69		143	67
449	133.04	1.12	6.42		142	67
450	133.35	1.09	6.66		141	67
451	133.11	1.08	6.82		140	67
452	133.24	1.07	6.86		138	67
453	133.24	1.02	6.65		137	67
454	133.06	0.97	6.35		136	67
455	133.15	0.95	6.21		135	67
456	132.90	0.93	6.06		157	67
457	131.94	3.01	13.71		200	67
458	130.89	0.07	15.55		227	67
459	129.73	0.04	15.24		247	67
460	128.63	0.04	15.7		259	67
461	127.33	0.04	16.07		268	67
462	126.40	0.05	16.44		275	67
463	125.35	0.05	16.86		281	67
464	124.05	0.05	17.06		284	67
465	123.51	0.05	16.91		286	67
466	121.55	0.06	17.06		289	67
467	120.41	0.06	17.41		293	67
468	119.49	0.07	17.85		293	67
469	117.80	0.07	17.72		294	67
470	116.58	0.07	17.28		294	67
471	115.30	0.06	17.27		297	67
472	114.15	0.06	17.33		297	67
473	112.62	0.06	17.41		298	67
474	112.43	0.06	17.44		300	67
475	110.31	0.06	17.41		300	67
476	109.67	0.06	17.37		302	67
477	108.05	0.05	17.55		303	67
478	107.11	0.05	17.69		302	67
479	106.09	0.06	18.09		302	67
480	104.54	0.05	17.41		299	67
481	104.23	0.05	17.19		303	67
482	101.96	0.06	17.56		303	67
483	100.28	0.05	17.33		302	67

484	99.53	0.06	17.81		304	67
485	98.30	0.05	17.08		306	67
486	97.91	0.05	16.91		307	67
487	96.01	0.05	16.96		308	67
488	94.64	0.05	16.99		309	67
489	93.49	0.04	17.01		311	67
490	92.73	0.05	17.22		279	67
491	91.98	0.1	17.62		257	67
492	92.16	0.13	18.56		245	67
493	91.69	0.86	20.25		236	67
494	91.26	0.21	18.56		230	67
495	90.88	0.55	16.25		225	67
496	90.75	0.97	17.43		221	67
497	91.40	0.67	15.68		217	67
498	91.26	0.8	15.46		214	67
499	90.84	0.69	14.51		211	67
500	90.89	0.44	13.18		211	67
501	90.84	0.52	12.47		210	67
502	90.67	2.34	15.34		208	67
503	90.42	4.03	17.43		206	67
504	90.17	4.85	18.24		203	67
505	90.30	5.2	19.04		200	67
506	91.03	5.2	19.21		197	67
507	91.23	5.2	18.22		195	67
508	91.07	5.04	17.52		192	67
509	90.60	4.75	16.76		189	67
510	90.67	4.49	16.03		187	67
511	90.91	4.01	14.67		184	67
512	90.88	4.01	14.85		182	67
513	91.02	3.6	13.7		179	67
514	91.36	3.48	13.47		177	67
515	90.61	3.08	12.34		175	67
516	90.74	2.88	11.75		173	67
517	90.86	2.66	11.19		170	67
518	90.77	2.48	10.62		168	67
519	90.98	2.19	9.62		166	67
520	90.84	2.19	9.71		164	67
521	91.29	1.94	8.85		162	67
522	91.06	1.86	8.59		160	67
523	91.22	1.65	7.79		158	67
524	91.26	1.7	7.95		156	67
525	90.90	1.36	6.76		154	67

526	91.00	1.29	6.94		153	67
527	91.40	1.14	6.57		151	67
528	91.12	1.05	6.55		150	67
529	91.11	0.97	6.39		148	67
530	91.31	0.89	6.23		146	67
531	91.44	0.84	6.15		145	67
532	91.43	0.77	5.91		144	67
533	91.41	0.73	5.71		143	67
534	91.89	0.69	5.51		142	67
535	91.98	0.64	5.14		141	67
536	91.43	0.63	5.07		139	67
537	91.23	0.57	4.68		138	67
538	91.26	0.55	4.54		136	67
539	91.32	0.53	4.37		135	67
540	92.03	0.54	4.34		134	67
541	91.52	0.5	4.09		133	67
542	91.23	0.5	4.06		132	67
543	90.82	0.54	4.23		177	67
544	89.80	1.2	11.81		210	67
545	88.81	0.12	13.85		232	67
546	88.37	0.05	14.39		249	67
547	87.31	0.04	15.28		261	67
548	86.78	0.05	15.75		269	67
549	85.08	0.06	15.86		274	67
550	83.93	0.06	15.98		276	67
551	83.42	0.06	15.94		279	67
552	82.82	0.06	16.12		283	67
553	80.95	0.05	16.38		287	67
554	80.04	0.04	16.83		290	67
555	78.84	0.04	17.14		293	67
556	77.22	0.04	17.4		294	67
557	77.23	0.04	16.83		296	67
558	76.27	0.04	17.31		295	67
559	74.31	0.03	16.86		297	67
560	73.69	0.04	17.24		298	67
561	72.80	0.04	17.13		298	67
562	71.11	0.04	16.84		300	67
563	69.95	0.04	17.06		299	67
564	69.46	0.04	16.73		299	67
565	68.20	0.04	16.54		301	67
566	66.45	0.04	16.93		302	67
567	66.47	0.04	16.91		303	67

568	64.75	0.03	16.77		303	67
569	63.59	0.04	16.85		304	67
570	62.44	0.04	16.71		304	67
571	61.25	0.04	16.45		306	67
572	60.09	0.04	16.88		307	67
573	59.29	0.04	16.56		306	67
574	57.65	0.04	16.58		308	67
575	57.24	0.04	16.61		309	67
576	55.90	0.04	16.7		308	67
577	55.24	0.04	16.59		298	67
578	54.79	0.03	11.66		267	67
579	54.26	0	12.5		250	67
580	53.79	0	12.61		239	67
581	53.98	0	12.28		232	67
582	53.43	0.01	9.06		228	67
583	52.80	0.56	16.22		224	67
584	53.46	0.39	15.87		219	67
585	53.28	0.21	14.65		216	67
586	53.20	0.29	14.66		213	67
587	53.34	0.18	13.39		211	67
588	52.96	0.1	11.9		211	67
589	53.16	0.66	12.49		210	67
590	53.05	2.46	15.67		207	67
591	53.12	3.95	17.68		205	67
592	53.50	4.83	18.92		202	67
593	53.02	4.82	18.27		199	67
594	53.26	5.2	19.26		196	67
595	53.37	4.98	18.27		194	67
596	53.01	4.64	17.19		191	67
597	53.43	4.61	17.08		188	67
598	53.38	4.27	16.17		186	67
599	53.26	3.93	15.31		183	67
600	53.53	3.67	14.61		180	67
601	53.20	3.21	13.18		178	67
602	53.66	2.9	12.21		176	67
603	53.80	2.71	11.56		173	67
604	53.09	2.48	10.92		171	67
605	53.65	2.43	10.8		169	67
606	53.89	2.14	9.76		167	67
607	53.44	1.94	9.02		165	67
608	53.85	1.83	8.59		163	67
609	54.16	1.45	7.16		161	67

610	54.10	1.34	6.74		159	67
611	53.87	1.25	6.51		157	67
612	54.49	1.06	5.9		155	67
613	53.90	0.99	5.95		154	67
614	53.90	0.91	5.88		152	67
615	54.34	0.86	5.91		150	67
616	54.34	0.76	5.62		148	67
617	54.15	0.64	5.04		147	67
618	54.07	0.64	5.14		146	67
619	53.79	0.63	5.21		144	67
620	54.31	0.57	4.88		142	67
621	54.45	0.52	4.59		141	67
622	54.01	0.52	4.58		140	67
623	54.07	0.48	4.28		139	67
624	53.91	0.48	4.31		137	67
625	53.98	0.52	4.54		182	67
626	53.00	1.05	13.59		212	67
627	52.29	0.47	14.09		234	67
628	51.17	0.07	14.94		248	67
629	51.18	0.05	15.35		258	67
630	49.25	0.05	15.52		265	67
631	49.40	0.05	15.87		271	67
632	47.51	0.06	16.04		275	67
633	47.65	0.05	16.25		279	67
634	46.02	0.05	16.45		282	67
635	45.10	0.05	16.73		286	67
636	44.10	0.05	16.95		289	67
637	43.25	0.05	16.86		290	67
638	41.89	0.05	16.82		291	67
639	40.89	0.04	17.01		293	67
640	40.43	0.04	17.15		296	67
641	39.24	0.04	17.36		295	67
642	38.75	0.04	16.68		297	67
643	37.46	0.04	17.02		299	67
644	35.85	0.04	17.04		300	67
645	35.72	0.04	17.08		301	67
646	34.86	0.04	17.07		302	67
647	33.13	0.04	16.99		302	67
648	32.06	0.04	16.86		303	67
649	31.26	0.04	16.84		304	67
650	29.94	0.04	16.75		304	67
651	29.70	0.04	16.78		305	67

652	28.87	0.04	16.78		306	67
653	27.41	0.04	16.58		306	67
654	27.30	0.04	16.64		307	67
655	25.88	0.04	16.59		307	67
656	24.85	0.04	16.24		306	67
657	23.69	0.04	16.1		305	67
658	22.70	0.04	15.71		305	67
659	21.97	0.04	15.66		304	67
660	21.27	0.04	15.55		304	67
661	20.60	0.04	15.55		303	67
662	19.86	0.04	15.43		301	67
663	19.45	0.08	14.06		268	67
664	18.92	0.02	9.64		251	67
665	18.59	0.03	8.86		240	67
666	19.22	0.01	9.95		232	67
667	19.10	0.05	8.3		229	67
668	18.64	0.03	9.94		224	67
669	18.89	0.02	10.83		220	67
670	18.89	0.03	10.12		217	67
671	19.22	0.04	10.27		214	67
672	18.77	0.04	9.62		211	67
673	19.18	0.04	8.68		212	67
674	19.31	0.05	7.8		211	67
675	19.33	0.36	8.64		208	67
676	19.13	0.97	10.21		206	67
677	18.82	1.59	11.63		203	67
678	19.25	1.9	11.75		200	67
679	19.31	2.34	12.64		197	67
680	18.80	2.48	12.82		195	67
681	19.26	2.29	11.73		192	67
682	19.23	2.37	11.79		189	67
683	19.36	2.49	12.16		187	67
684	19.27	2.52	12.32		184	67
685	19.27	2.43	11.94		181	67
686	19.40	2.16	10.91		179	67
687	19.33	2.01	10.34		176	67
688	19.20	2	10.37		174	67
689	19.37	2.01	10.49		172	67
690	19.42	1.85	9.8		169	67
691	19.75	1.87	9.93		167	67
692	19.42	1.67	9.15		165	67
693	19.62	1.5	8.43		163	67

694	19.98	1.44	8.11		161	67
695	20.00	1.32	7.62		159	67
696	19.60	1.27	7.4		157	67
697	20.09	1.23	7.27		156	67
698	19.90	1.19	7.13		154	67
699	19.78	1.21	7.28		161	67
700	17.70	2.9	12.21		194	67
701	17.54	1.25	13.18		217	67
702	15.91	0.07	15.3		234	67
703	15.40	0.06	15.37		244	67
704	15.00	0.07	15.61		250	67
705	13.87	0.08	15.64		255	67
706	12.57	0.08	15.66		259	67
707	12.81	0.08	15.61		261	67
708	12.21	0.08	15.57		263	67
709	11.76	0.07	15.38		264	67
710	11.47	0.07	15.46		266	67
711	10.48	0.07	15.36		267	67
712	9.55	0.07	15.28		268	67
713	9.10	0.07	15.28		269	67
714	7.75	0.07	15.19		269	67
715	7.47	0.06	15.18		270	67
716	6.67	0.07	15.13		270	67
717	6.29	0.06	15.13		271	67
718	5.72	0.06	15.17		272	67
719	5.55	0.06	15.17		272	67
720	4.34	0.06	15.13		273	67
721	3.93	0.06	15.24		274	67
722	3.88	0.06	15.18		274	67
723	2.62	0.06	15.28		276	67
724	1.96	0.05	15.3		277	67
725	1.03	0.05	15.31		278	67
726	0.46	0.05	15.37		279	67
727	0.15	0.05	15.39		280	67
728	0.00	0.05	15.39		281	67

Run 3

Hydronic Heating Appliances - Test Method ASTM 2618
Results

Manufacturer: Central Boiler - WoodMaster
Model: Edge 960 - CleanFire 900
Tracking No.: 2430
Project No.: 0117WB041E
Run: 3
Test Date: December 14, 2020

Burn Rate	**2.83 kg/hr dry**
Average Tunnel Temperature	78 degrees F
Average Gas Velocity in Dilution Tunnel - vs	14.5 feet/second
Average Gas Flow Rate in Dilution Tunnel - Qsd	39680 dscf/hour
Average Delta p	0.043 inches H20
Average Delta H	1.30 inches H20
Total Time of Test	3100 minutes

PARTICULATE EMISSIONS RESULTS

First Hour:	**23.29**	g/hr
	1.36	g/kg
	1.08	lb/mmBTU output
Complete Run:	**1.34**	g/hr
	0.47	g/kg
	0.06	lb/mmBTU output

	SAMPLE TRAIN 1	SAMPLE TRAIN 2	AMBIENT SAMPLE TRAIN
Total Sample Volume - Vm	495.17 cubic feet	494.19 cubic feet	976.61 cubic feet
Average Gas Meter Temperature	83 degrees F	83 degrees F	71 degrees F
Total Sample Volume (Standard Conditions) - Vmstd	492.7 dscf	483.3 dscf	949.8 dscf
Total Particulates - mn	17.6 mg	15.7 mg	0.2 mg
Particulate Concentration (dry-standard)	0.000036 grams/dscf	0.000032 grams/dscf	0.000000 grams/dscf
Particulate Emissions	72.80 grams	66.17 grams	
Difference from Average	3.31 grams	3.31 grams	

Results Are Acceptable

AVERAGE

Total Sample Volume - Vm	494.68 cubic feet
Average Gas Meter Temperature	83 degrees F
Total Sample Volume (Standard Conditions) - Vmstd	488.0 dscf
Particulate Concentration (dry-standard)	0.00003 grams/dscf
Particulate Emissions	69.48 grams
7.5% of the average particulate emissions	5.21 grams

ADDITIONAL ACCEPTANCE CRITERIA

Boiler Water Return Temperature >120 °F	**Acceptable**
Proportional Rate Variation >80%	**Not Acceptable**
90% of PR Values between 90-110%	**Acceptable**
Train Precision < 7.5%	**7.15**

SAMPLE TRAIN 1 - FIRST HOUR

Total Sample Volume - Vm	9.55 cubic feet
Average Gas Meter Temperature	75 degrees F
Total Sample Volume (Standard Conditions) - Vmstd	9.71 dscf
Total Particulates - mn	5.7 mg
Particulate Concentration (dry-standard)	0.00059 grams/dscf
Particulate Emissions	23.29 grams
Burn Rate	17.12 (dry kg/hr)
Heat Output Rate	47384 BTU/hr

Run: 3

Manufacturer: Central Boiler - WoodMaster
Model: Edge 960 - CleanFire 900
Tracking No.: 2430
Project No.: 0117WB041E
Test Date: December 14, 2020
Technician: BD, TT
Beginning Clock Time: 21:13
Recording Interval: 1 min.
Total Sampling Time: 3100 min.

Velocity Traverse Data

	Pt.1	Pt.2	Pt.3	Pt.4	Pt.5	Pt.6	Pt.7	Pt.8	Pt.9	Pt.10	Pt.11	Pt.12	Center	
Initial dP	0.046	0.056	0.060	0.060	0.050	0.044	0.040	0.054	0.060	0.060	0.054	0.048	0.048	"H2O
Initial Temp.	71	71	71	71	71	71	71	71	71	71	71	71	71	

Air Velocity: Initial: <50 Final: <50 V_{strav} 15.13 ft/sec
Scale Audit: Pre: 10.0 Post: 10.0 Induced Draft: 0 V_{scent} 14.48 ft/sec
Pitot Tube Leak Test: Pre: 0 Post: 0 % Smoke Capture: 100 F_p 1.045
Flue Pipe Cleaned Prior to First Test in Series: Date: 12/8/2020

PM Control Module: 335, 336
Dilution Tunnel MW(dry): 29.00 lb/lb-mole
Dilution Tunnel MW(wet): 28.78 lb/lb-mole
Dilution Tunnel H2O: 2.00 percent
Dilution Tunnel Static: -0.496 "H2O
Pitot Tube Cp: 0.99

	(1)	(2)	(amb)
Meter Box Y Factor:	1.013	0.997	0.97
Barometric Pressure:	Begin	Middle	End
	30.30	30.22	29.88

Average 30.13 "Hg

Tunnel Velocity: 14.52 ft/sec.
Intial Tunnel Flow: 700.6 scfm
Average Tunnel Flow: 661.3 scfm
Tunnel Area: 0.785 ft2
Post-Test Leak Check (1): 0.000 cfm @ 10 in. Hg
Post-Test Leak Check (2): 0.000 cfm @ 8 in. Hg
Fuel Moisture (dry basis %): 20.7
Total Particulate (1): 17.6
Total Particulate (2): 15.7

Elapsed Time	Particulate Sampling Data																Fuel Weight, lb		Flow, gpm		Temperature Data, oF											
	Gas Meter Cubic Feet (1)	Gas Meter Cubic Feet (2)	Gas Meter Cubic Feet (amb)	Sample Rate, cfm (1)	Sample Rate, cfm (2)	Orifice dH (1)	Orifice dH (2)	Orifice dH (amb)	Meter oF (1)	Meter oF (2)	Meter oF (amb)	Meter Vac. In. Hg. (1)	Meter Vac. In. Hg. (2)	Dilution Tunnel Temp.	Dilution Tunnel dP	Pro. Rate (%) (1)	Pro. Rate (%) (2)	Scale Reading	Weight Change	Load Side Liquid Flow Rate	Boiler Side Liquid Flow Rate (optional)	Thermopile ΔT	Boiler to Heat Exch. Temp.	Heat Exch to Boiler Temp.	Inlet Load Temp.	Outlet Load Temp.	Stack	Filter (1)	Filter (2)	Ambient		Specific Heat of Inlet Water (BTU/lb-°F)	Mass Flow Rate of Inlet Water (lb/min)	Heat Output, Btu
0	0.000	0.000	0.000			1.67	1.06	0.36	72	72	67	2.90	1.50	72	0.046			389.5		0.82	15.6	107.3	162.9	158.4	55.3	162.6	129	66	66	67	0.020			
1	0.174	0.150		0.17	0.15	1.68	1.06	0.36	72	72	67	2.92	2	73	0.047	106	92	387.8	1.66	0.90	15.5	107.2	162.7	158.3	55.3	162.4	140	66	66	67	0.020	1.001	7.481	803
2	0.351	0.308		0.18	0.16	1.68	1.05	0.36	72	72	67	2.91	2	73	0.045	110	99	386.6	1.24	0.78	15.5	107.0	162.6	158.3	55.3	162.3	143	66	66	67	0.020	1.001	6.508	697
3	0.529	0.467		0.18	0.16	1.68	1.05	0.36	72	72	67	2.91	2	73	0.043	114	102	385.2	1.36	0.80	15.5	106.9	162.4	158.1	55.3	162.2	146	67	67	67	0.021	1.001	6.670	714
4	0.707	0.623		0.18	0.16	1.67	1.04	0.36	72	72	67	2.95	2	78	0.043	114	100	383.5	1.79	0.80	15.5	106.8	162.4	157.9	55.3	162.1	156	67	67	67	0.032	1.001	6.672	713
5	0.884	0.781		0.18	0.16	1.66	1.03	0.36	72	72	67	2.94	2	85	0.042	116	103	381.9	1.55	0.78	15.6	106.8	162.4	158.0	55.3	162.1	176	67	67	67	0.044	1.001	6.510	696
6	1.061	0.936		0.18	0.16	1.65	1.02	0.36	72	72	67	2.93	2	88	0.043	115	101	379.6	2.35	0.84	15.5	107.0	162.6	158.2	55.3	162.3	186	68	67	67	0.041	1.001	6.996	749
7	1.228	1.094		0.17	0.16	1.32	1.01	0.36	72	72	67	2.56	2	89	0.042	109	104	378.6	0.97	0.86	15.6	107.1	162.8	158.4	55.3	162.4	192	68	67	67	0.043	1.001	7.156	768
8	1.386	1.249		0.16	0.16	1.31	1.01	0.36	72	72	67	2.57	2	90	0.042	104	102	376.2	2.36	0.84	15.5	107.2	162.9	158.4	55.3	162.5	197	68	68	67	0.048	1.001	6.996	751
9	1.544	1.406		0.16	0.16	1.31	1.01	0.36	72	72	67	2.55	2	91	0.041	105	105	373.9	2.30	0.84	15.5	107.5	163.1	158.7	55.3	162.8	200	68	68	67	0.050	1.001	6.992	752
10	1.703	1.561		0.16	0.16	1.30	1.04	0.36	72	72	67	2.56	2	92	0.047	99	97	372.3	1.61	0.82	15.5	107.7	163.5	159.0	55.3	163.0	203	69	68	67	0.049	1.001	6.834	737
11	1.861	1.719		0.16	0.16	1.31	1.03	0.36	72	72	67	2.56	2	93	0.045	100	101	370.3	2.00	0.86	15.5	108.0	163.8	159.3	55.3	163.3	205	69	69	67	0.047	1.001	7.155	774
12	2.019	1.875		0.16	0.16	1.29	1.03	0.36	72	72	67	2.57	2	94	0.041	105	104	368.6	1.67	0.86	15.5	108.4	164.1	159.6	55.3	163.7	208	70	69	67	0.050	1.001	7.157	777
13	2.176	2.032		0.16	0.16	1.30	1.03	0.36	73	73	67	2.55	2	95	0.044	101	101	366.3	2.33	0.84	15.5	108.7	164.5	160.0	55.3	164.1	210	70	70	67	0.048	1.001	7.000	762
14	2.333	2.189		0.16	0.16	1.30	1.02	0.36	73	73	67	2.56	2	95	0.042	103	104	364.0	2.33	0.80	15.5	109.3	165.2	160.6	55.3	164.6	213	71	70	67	0.051	1.001	6.671	730
15	2.490	2.345		0.16	0.16	1.30	1.02	0.36	73	73	67	2.59	2	99	0.041	105	105	362.8	1.16	0.78	15.5	109.9	165.8	161.2	55.4	165.2	227	72	71	67	0.050	1.001	6.510	716
16	2.649	2.501		0.16	0.16	1.30	1.02	0.36	73	73	67	2.59	2	102	0.040	108	106	361.0	1.84	0.80	15.6	110.9	166.9	162.3	55.4	166.3	247	73	72	67	0.055	1.001	6.673	741
17	2.805	2.656		0.16	0.16	1.30	1.02	0.36	73	73	67	2.60	2	105	0.040	106	106	359.5	1.47	0.86	15.6	111.9	168.0	163.2	55.4	167.3	263	74	73	67	0.051	1.001	7.146	801
18	2.962	2.811		0.16	0.16	1.31	1.01	0.36	73	73	67	2.60	2	107	0.043	103	102	358.7	0.78	0.84	15.5	113.2	169.2	164.4	55.4	168.6	274	75	74	67	0.052	1.001	6.995	793
19	3.118	2.966		0.16	0.16	1.31	1.01	0.36	73	73	67	2.62	2	109	0.045	100	100	356.5	2.22	0.81	15.5	114.5	170.5	165.7	55.4	169.9	281	76	75	67	0.054	1.001	6.763	775
20	3.274	3.120		0.16	0.15	1.31	1.00	0.36	73	74	67	2.63	2	109	0.042	104	103	355.8	0.68	0.82	15.5	115.6	171.6	166.7	55.4	171.0	283	77	75	67	0.049	1.001	6.806	788
21	3.431	3.275		0.16	0.16	1.29	1.00	0.36	73	74	67	2.64	2	110	0.041	106	105	354.2	1.64	0.86	15.5	116.8	172.9	168.0	55.4	172.2	285	77	76	67	0.056	1.001	7.186	840
22	3.587	3.428		0.16	0.15	1.29	1.00	0.36	74	74	67	2.64	2	110	0.043	103	101	352.2	2.01	0.84	15.5	118.0	174.1	169.0	55.4	173.4	287	78	76	67	0.054	1.001	7.035	831
23	3.742	3.583		0.16	0.16	1.29	1.00	0.36	74	74	67	2.65	2	110	0.042	103	103	351.3	0.91	0.84	15.6	119.1	175.2	170.2	55.4	174.5	287	78	77	67	0.057	1.001	6.991	834
24	3.898	3.736		0.16	0.15	1.28	1.00	0.36	74	74	67	2.65	2	111	0.047	98	97	349.4	1.88	0.84	15.4	120.3	176.3	171.3	55.4	175.7	290	79	77	67	0.058	1.001	6.993	842
25	4.055	3.889		0.16	0.15	1.29	1.00	0.36	74	74	67	2.66	2	112	0.043	103	101	347.3	2.09	0.86	15.5	121.5	177.6	172.6	55.4	176.9	291	79	78	67	0.054	1.001	7.154	870
26	4.210	4.043		0.16	0.15	1.28	0.99	0.36	74	74	67	2.66	2	112	0.042	103	103	346.4	0.92	0.82	15.4	122.7	178.7	173.6	55.4	178.0	292	80	78	67	0.057	1.001	6.848	841
27	4.364	4.195		0.15	0.15	1.28	0.99	0.36	74	75	67	2.69	2	112	0.043	101	100	345.4	0.98	0.84	13.1	123.9	179.9	174.8	55.4	179.3	293	80	78	67	0.055	1.001	6.994	868
28	4.520	4.349		0.16	0.15	1.28	0.98	0.36	74	75	67	2.68	2	112	0.048	97	96	344.2	1.20	0.80	15.1	125.0	181.1	175.7	55.4	180.4	293	80	78	67	0.059	1.001	6.667	835
29	4.675	4.501		0.16	0.15	1.27	0.98	0.36	75	75	67	2.69	2	112	0.043	102	100	343.7	0.48	0.84	12.9	126.1	182.0	176.7	55.4	181.5	295	80	78	67	0.057	1.001	6.994	883
30	4.830	4.653		0.16	0.15	1.28	0.99	0.36	75	75	67	2.69	2	90	0.047	96	94	343.2	0.48	0.84	11.6	126.5	182.5	177.2	55.4	182.0	268	78	77	67	0.041	1.001	6.989	885
31	4.985	4.807		0.16	0.15	1.27	0.98	0.36	75	75	67	2.69	2	83	0.044	98	98	343.2	-0.01	0.86	9.6	126.8	182.7	177.4	55.4	182.2	244	77	76	67	0.040	1.001	7.152	908
32	5.141	4.959		0.16	0.15	1.27	0.98	0.36	75	75	67	2.68	2	79	0.044	98	96	343.3	-0.01	0.84	11.6	127.0	182.8	177.6	55.4	182.4	232	75	74	67	0.039	1.001	6.991	889
33	5.297	5.112		0.16	0.15	1.26	0.98	0.36	75	75	67	2.67	2	78	0.043	99	98	343.0	0.22	0.82	11.9	127.2	183.0	177.8	55.3	182.6	223	74	73	67	0.037	1.001	6.831	870
34	5.452	5.266		0.16	0.15	1.27	0.98	0.36	75	76	67	2.66	2	77	0.045	97	96	343.3	-0.25	0.80	12.5	127.3	183.0	177.8	55.3	182.6	218	72	72	67	0.035	1.001	6.665	849
35	5.607	5.419		0.16	0.15	1.27	0.98	0.36	75	76	67	2.66	2	75	0.044	97	96	343.4	-0.10	0.84	9.3	127.4	183.1	177.9	55.3	182.7	214	71	71	67	0.035	1.001	6.991	892
36	5.764	5.573		0.16	0.15	1.27	0.99	0.36	75	76	67	2.66	2	75	0.045	98	96	343.6	-0.22	0.82	7.7	127.4	183.2	177.9	55.4	182.8	210	70	70	67	0.035	1.001	6.831	871
37	5.920	5.726		0.16	0.15	1.26	0.99	0.36	76	76	67	2.67	2	74	0.045	97	95	342.9	0.72	0.86	10.4	127.3	183.1	177.8	55.4	182.7	207	70	69	67	0.034	1.001	7.155	912
38	6.075	5.880		0.16	0.15	1.28	0.99	0.36	76	76	67	2.63	2	74	0.045	96	96	342.4	0.46	0.80	9.1	127.4	183.1	177.8	55.4	182.7	204	70	68	67	0.034	1.001	6.668	850
39	6.232	6.035		0.16	0.16	1.28	0.99	0.36	76	76	67	2.64	2	74	0.045	97	96	342.6	-0.19	0.82	10.5	127.3	183.1	177.8	55.3	182.7	201	70	68	67	0.033	1.001	6.834	871
40	6.389	6.189		0.16	0.15	1.29	0.99	0.36	76	76	67	2.63	2	73	0.044	98	97	343.2	-0.56	0.80	4.6	127.3	183.1	177.8	55.4	182.7	200	69	67	67	0.031	1.001	6.673	851
41	6.546	6.344		0.16	0.16	1.29	1.00	0.36	76	76	67	2.61	2	72	0.042	101	100	343.3	-0.10	0.86	11.6	127.3	183.0	177.7	55.3	182.6	199	69	68	67	0.030	1.001	7.153	911
42	6.703	6.498		0.16	0.15	1.29	1.00	0.36	76	77	67	2.60	2	72	0.044	98	96	342.9	0.43	0.82	10.3	127.2	183.0	177.6	55.4	182.6	197	68	67	67	0.029	1.001	6.836	871
43	6.860	6.654		0.16	0.16	1.29	1.00	0.36	76	77	67	2.59	2	72	0.045	97	97	343.2	-0.37	0.84	7.2	127.1	182.9	177.5	55.4	182.4	195	68	67	67	0.029	1.001	7.003	891
44	7.018	6.809		0.16	0.16	1.30	1.01	0.36	76	77	67	2.59	2	72	0.047	96	94	343.3	-0.07	0.82	6.5	127.1	182.9	177.6	55.3	182.5	192	67	66	67	0.029	1.001	6.838	871
45	7.175	6.965		0.16	0.16	1.30	1.01	0.36	76	77	67	2.59	2	72	0.047	95	95	343.7	-0.44	0.84	10.3	127.0	182.7	177.5	55.4	182.4	189	67	66	67	0.028	1.001	6.990	889
46	7.334	7.120		0.16	0.16	1.30	1.01	0.36	76	77	66	2.58	2	73	0.041	103	101	342.7	1.02	0.80	10.3	126.9	182.7	177.5	55.4	182.3	187	67	66	66	0.028	1.001	6.680	849
47	7.492	7.277		0.16	0.16	1.30	1.01	0.36	76	77	66	2.59	2	72	0.049	94	93	343.8	-1.08	0.88	10.3	126.8	182.6	177.4	55.4	182.2	184	67	66	66	0.028	1.001	7.313	929
48	7.650	7.432		0.16	0.16	1.29	1.02	0.36	77	77	66	2.58	2	73	0.045	98	96	343.5	0.30	0.84	11.6	126.7	182.5	177.2	55.4	182.1	181	67	66	66	0.028	1.001	6.999	888
49	7.808	7.589		0.16	0.16	1.30	1.02	0.36	77	77	66	2.57	2	73	0.047	96	95	343.9	-0.37	0.88	8.4	126.6	182.5	177.2	55.4	182.0	179	67	66	66	0.027	1.001	7.324	929
50	7.966	7.745		0.16	0.16	1.31	1.03	0.36	77	77	66	2.57	2	73	0.044	99	98	344.4	-0.50	0.88	12.1	126.5	182.4	177.2	55.5	181.9	177	67	66	66	0.027	1.001	7.320	927
51	8.124	7.903		0.16	0.16	1.30	1.03	0.36	77	77	66	2.57	2	73	0.041	102	103	343.2	1.20	0.81	13.0	126.4	182.3	177.0	55.5	181.9	174	67	66	66	0.026	1.001	6.732	852
52	8.283	8.060		0.16	0.16	1.31	1.03	0.36	77	77	66	2.57	2	73	0.046	97	96	343.4	-0.25	0.81	10.4	126.4	182.2	177.0	55.4	181.8	172	67	66	66	0.025	1.001	6.777	858

Elapsed Time	Particulate Sampling Data																	Fuel Weight, lb		Flow, gpm		Temperature Data, oF													
	Gas Meter Cubic Feet (1)	Gas Meter Cubic Feet (2)	Gas Meter Cubic Feet (amb)	Sample Rate, cfm (1)	Sample Rate, cfm (2)	Orifice dH (1)	Orifice dH (2)	Orifice dH (amb)	Meter oF (1)	Meter oF (2)	Meter oF (amb)	Meter Vac. In. Hg. (1)	Meter Vac. In. Hg. (2)	Dilution Tunnel Temp.	Dilution Tunnel dP	Pro. Rate (%) (1)	Pro. Rate (%) (2)	Scale Reading	Weight Change	Load Side Liquid Flow Rate	Boiler Side Liquid Flow Rate (optional)	Thermopile ΔT	Boiler to Heat Exch. Temp.	Heat Exch to Boiler Temp.	Inlet Load Temp.	Outlet Load Temp.	Stack	Filter (1)	Filter (2)	Ambient		Specific Heat of Inlet Water (BTU/lb-°F)	Mass Flow Rate of Inlet Water (lb/min)	Heat Output, Btu
53	8.442	8.218		0.16	0.16	1.30	1.04	0.36	77	78	66	2.57	2	72	0.046	97	97	342.8	0.59	0.82	13.0	126.4	182.2	177.0	55.4	181.8	170	67	66	66	0.025	1.001	6.847	866
54	8.600	8.375		0.16	0.16	1.32	1.03	0.36	77	78	66	2.57	2	72	0.043	100	99	343.6	-0.75	0.83	8.3	126.3	182.1	176.9	55.4	181.7	168	67	66	66	0.025	1.001	6.932	877
55	8.759	8.532		0.16	0.16	1.30	1.04	0.36	77	78	66	2.57	2	72	0.043	100	99	343.6	-0.01	0.84	9.9	126.2	181.9	176.7	55.4	181.6	166	67	66	66	0.024	1.001	6.997	884
56	8.917	8.691		0.16	0.16	1.31	1.03	0.36	77	78	67	2.56	2	72	0.044	99	99	343.9	-0.36	0.83	12.3	126.1	181.8	176.7	55.4	181.5	164	67	67	67	0.024	1.001	6.883	869
57	9.076	8.848		0.16	0.16	1.31	1.04	0.36	77	78	67	2.54	2	72	0.043	100	99	343.7	0.25	0.86	12.9	126.0	181.8	176.6	55.4	181.4	162	67	66	67	0.024	1.001	7.154	903
58	9.235	9.008		0.16	0.16	1.32	1.04	0.36	77	78	66	2.55	2	72	0.043	100	101	343.6	0.09	0.82	10.3	126.0	181.7	176.5	55.4	181.4	160	67	66	66	0.023	1.001	6.857	865
59	9.394	9.165		0.16	0.16	1.32	1.04	0.36	77	78	66	2.55	2	72	0.044	99	98	344.2	-0.59	0.84	10.3	125.8	181.6	176.4	55.4	181.2	158	67	66	66	0.023	1.001	6.995	881
60	9.553	9.323		0.16	0.16	1.32	1.05	0.36	77	78	67	2.55	2	72	0.045	98	98	343.9	0.26	0.86	11.1	125.7	181.5	176.3	55.4	181.1	157	67	66	67	0.023	1.001	7.158	901
61	9.713	9.482		0.16	0.16	1.31	1.05	0.36	77	78	67	2.54	2	72	0.044	100	99	343.3	0.60	0.84	12.9	125.6	181.4	176.2	55.4	181.0	155	67	66	67	0.022	1.001	6.994	880
62	9.872	9.640		0.16	0.16	1.31	1.05	0.36	77	78	67	2.56	2	72	0.038	107	106	343.8	-0.46	0.82	9.1	125.6	181.4	176.2	55.4	180.9	154	67	66	67	0.022	1.001	6.830	859
63	10.031	9.800		0.16	0.16	1.32	1.05	0.36	77	78	67	2.54	2	72	0.046	97	98	344.2	-0.42	0.82	12.0	125.4	181.2	176.0	55.4	180.8	152	67	66	67	0.021	1.001	6.833	858
64	10.190	9.958		0.16	0.16	1.31	1.05	0.36	77	78	67	2.55	2	72	0.045	98	98	343.5	0.71	0.84	9.0	125.3	181.0	175.8	55.4	180.7	150	67	66	67	0.021	1.001	6.996	878
65	10.349	10.117		0.16	0.16	1.31	1.05	0.36	78	78	67	2.55	2	72	0.045	98	98	344.0	-0.53	0.84	12.8	125.2	181.0	175.8	55.4	180.6	149	67	66	67	0.021	1.001	6.992	877
66	10.508	10.276		0.16	0.16	1.32	1.05	0.36	78	78	67	2.56	2	72	0.049	94	94	343.2	0.81	0.82	11.7	125.1	180.8	175.7	55.4	180.5	148	67	67	67	0.021	1.001	6.831	856
67	10.667	10.434		0.16	0.16	1.31	1.04	0.36	78	78	67	2.55	2	72	0.041	103	102	344.6	-1.35	0.84	7.3	125.1	180.8	175.6	55.4	180.4	146	67	67	67	0.020	1.001	6.992	875
68	10.826	10.593		0.16	0.16	1.31	1.05	0.36	78	78	67	2.54	2	72	0.045	98	98	343.2	1.35	0.80	12.8	125.0	180.7	175.5	55.4	180.3	145	67	67	67	0.021	1.001	6.670	834
69	10.985	10.752		0.16	0.16	1.31	1.05	0.36	78	78	67	2.54	2	72	0.046	97	97	344.2	-1.00	0.82	12.9	124.9	180.6	175.4	55.3	180.2	143	67	67	67	0.020	1.001	6.831	854
70	11.145	10.911		0.16	0.16	1.32	1.05	0.36	78	78	67	2.55	2	71	0.045	99	98	343.4	0.79	0.82	10.4	124.7	180.5	175.3	55.4	180.1	142	67	67	67	0.020	1.001	6.830	853
71	11.304	11.071		0.16	0.16	1.31	1.05	0.36	78	78	67	2.55	2	71	0.047	96	97	343.7	-0.24	0.88	9.0	124.7	180.3	175.2	55.3	180.0	141	67	67	67	0.019	1.001	7.317	913
72	11.464	11.229		0.16	0.16	1.32	1.05	0.36	78	78	67	2.55	2	71	0.045	99	98	343.5	0.19	0.82	11.7	124.5	180.2	175.1	55.3	179.8	140	67	67	67	0.020	1.001	6.830	851
73	11.623	11.388		0.16	0.16	1.31	1.05	0.36	78	78	67	2.54	2	71	0.044	99	99	344.2	-0.66	0.76	12.2	124.4	180.2	175.1	55.3	179.8	139	67	67	67	0.019	1.001	6.345	791
74	11.782	11.548		0.16	0.16	1.31	1.05	0.36	78	78	67	2.54	2	72	0.042	101	102	343.8	0.35	0.84	14.1	124.3	180.0	174.9	55.3	179.7	137	67	67	67	0.019	1.001	6.993	870
75	11.941	11.706		0.16	0.16	1.31	1.04	0.36	78	79	67	2.55	2	72	0.046	97	96	343.6	0.18	0.84	10.7	124.2	179.8	174.8	55.3	179.5	136	67	67	67	0.019	1.001	6.992	869
76	12.100	11.865		0.16	0.16	1.32	1.05	0.36	78	79	67	2.56	2	72	0.045	98	98	344.1	-0.51	0.80	11.6	124.0	179.8	174.7	55.3	179.4	135	67	67	67	0.019	1.001	6.669	828
77	12.259	12.025		0.16	0.16	1.32	1.05	0.36	78	79	67	2.55	2	71	0.041	103	103	343.7	0.43	0.84	12.8	124.0	179.7	174.6	55.3	179.3	134	67	67	67	0.019	1.001	6.993	868
78	12.419	12.183		0.16	0.16	1.32	1.05	0.36	78	79	67	2.54	2	71	0.046	97	96	343.4	0.32	0.78	8.3	123.8	179.5	174.4	55.3	179.2	134	67	67	67	0.019	1.001	6.510	807
79	12.578	12.343		0.16	0.16	1.31	1.05	0.36	78	79	67	2.55	2	71	0.043	100	101	344.0	-0.63	0.84	11.9	123.7	179.5	174.3	55.3	179.0	134	67	67	67	0.018	1.001	6.993	866
80	12.737	12.501		0.16	0.16	1.32	1.04	0.36	78	79	67	2.56	2	71	0.045	98	97	344.1	-0.08	0.84	11.9	123.6	179.3	174.1	55.3	179.0	132	67	67	67	0.018	1.001	6.994	866
81	12.897	12.660		0.16	0.16	1.32	1.05	0.36	78	79	67	2.55	2	71	0.045	99	98	344.4	-0.33	0.86	12.0	123.5	179.2	174.0	55.3	178.8	131	67	67	67	0.018	1.001	7.156	885
82	13.057	12.820		0.16	0.16	1.31	1.05	0.36	78	79	67	2.55	2	72	0.041	103	103	344.0	0.38	0.84	12.0	123.4	179.0	173.9	55.3	178.7	130	67	67	67	0.017	1.001	7.020	867
83	13.216	12.978		0.16	0.16	1.31	1.05	0.36	78	79	67	2.54	2	71	0.045	98	97	343.6	0.45	0.82	11.7	123.3	178.9	173.9	55.3	178.6	129	67	67	67	0.017	1.001	6.831	843
84	13.376	13.137		0.16	0.16	1.31	1.05	0.36	78	79	67	2.56	2	71	0.044	100	99	344.6	-0.98	0.82	14.2	123.1	178.8	173.7	55.3	178.4	129	67	67	67	0.018	1.001	6.859	846
85	13.535	13.297		0.16	0.16	1.31	1.05	0.36	78	79	67	2.54	2	71	0.046	97	98	343.6	1.02	0.86	13.1	123.0	178.7	173.7	55.3	178.3	129	67	67	67	0.017	1.001	7.202	887
86	13.694	13.456		0.16	0.16	1.31	1.05	0.36	78	79	67	2.56	2	71	0.046	97	97	343.9	-0.35	0.86	13.0	122.9	178.6	173.6	55.3	178.3	127	67	67	67	0.017	1.001	7.155	881
87	13.853	13.615		0.16	0.16	1.31	1.05	0.36	78	79	67	2.54	2	71	0.046	97	97	343.4	0.52	0.84	14.2	122.8	178.5	173.5	55.3	178.1	126	67	67	67	0.017	1.001	7.004	861
88	14.012	13.774		0.16	0.16	1.32	1.05	0.36	78	79	67	2.56	2	71	0.044	99	99	343.7	-0.28	0.84	10.4	122.6	178.3	173.4	55.4	178.0	126	67	67	67	0.017	1.001	6.993	859
89	14.172	13.933		0.16	0.16	1.32	1.05	0.36	78	79	67	2.54	2	71	0.046	97	97	344.6	-0.91	0.84	12.9	122.6	178.3	173.2	55.3	177.9	126	67	67	67	0.017	1.001	6.997	859
90	14.331	14.093		0.16	0.16	1.32	1.05	0.36	79	79	67	2.55	2	72	0.046	97	98	344.0	0.60	0.82	13.6	122.4	178.2	173.1	55.3	177.7	125	67	67	67	0.017	1.001	6.834	838
91	14.491	14.252		0.16	0.16	1.32	1.05	0.36	79	79	67	2.56	2	71	0.047	96	96	343.7	0.23	0.84	13.1	122.3	177.9	172.9	55.3	177.6	125	67	67	67	0.017	1.001	6.992	856
92	14.651	14.411		0.16	0.16	1.32	1.05	0.36	79	79	67	2.54	2	71	0.046	97	97	344.6	-0.90	0.84	12.1	122.2	177.9	172.9	55.3	177.5	125	67	67	67	0.017	1.001	6.993	856
93	14.811	14.571		0.16	0.16	1.32	1.05	0.36	79	79	67	2.55	2	71	0.044	99	100	343.5	1.14	0.84	12.9	122.1	177.7	172.7	55.3	177.4	123	67	67	67	0.017	1.001	6.994	855
94	14.970	14.729		0.16	0.16	1.32	1.05	0.36	79	79	67	2.54	2	71	0.044	99	98	343.9	-0.35	0.84	12.9	122.0	177.6	172.5	55.2	177.2	123	67	67	67	0.017	1.001	6.995	854
95	15.129	14.888		0.16	0.16	1.32	1.05	0.36	79	79	67	2.54	2	71	0.042	101	101	343.7	0.16	0.82	13.0	121.9	177.5	172.5	55.3	177.2	121	67	67	67	0.016	1.001	6.839	835
96	15.291	15.048		0.16	0.16	1.32	1.05	0.36	79	79	67	2.54	2	71	0.043	102	101	344.4	-0.67	0.80	14.2	121.7	177.3	172.3	55.3	177.0	121	66	67	67	0.016	1.001	6.672	813
97	15.450	15.207		0.16	0.16	1.31	1.05	0.36	79	79	67	2.58	2	71	0.047	96	96	344.2	0.22	0.88	14.2	121.6	177.2	172.1	55.3	176.9	120	67	67	67	0.016	1.001	7.325	892
98	15.609	15.366		0.16	0.16	1.31	1.05	0.36	79	79	67	2.56	2	71	0.048	95	95	344.4	-0.25	0.84	11.9	121.6	177.2	172.0	55.3	176.8	119	67	67	67	0.015	1.001	6.995	851
99	15.767	15.525		0.16	0.16	1.31	1.05	0.36	79	79	67	2.57	2	71	0.043	99	100	343.7	0.73	0.88	12.7	121.4	177.0	171.9	55.2	176.6	119	67	67	67	0.015	1.001	7.318	889
100	15.926	15.684		0.16	0.16	1.30	1.04	0.36	79	79	67	2.60	2	82	0.044	100	100	343.8	-0.17	0.84	12.2	121.2	176.9	171.8	55.3	176.5	153	68	68	67	0.039	1.001	6.995	849
101	16.085	15.843		0.16	0.16	1.31	1.04	0.36	79	79	67	2.58	2	73	0.043	100	100	343.4	0.39	0.80	11.7	121.2	176.8	171.8	55.2	176.4	159	68	67	67	0.020	1.001	6.674	810
102	16.244	16.002		0.16	0.16	1.31	1.05	0.36	79	79	67	2.56	2	71	0.043	100	100	343.6	-0.19	0.78	12.9	121.2	176.8	172.0	55.2	176.4	147	68	67	67	0.019	1.001	6.508	790
103	16.404	16.161		0.16	0.16	1.31	1.05	0.36	79	79	67	2.57	2	71	0.046	97	97	343.7	-0.05	0.84	10.3	121.1	176.7	171.8	55.2	176.3	140	68	67	67	0.018	1.001	6.995	848
104	16.563	16.321		0.16	0.16	1.31	1.05	0.36	79	79	67	2.56	2	71	0.047	96	97	344.0	-0.33	0.82	14.2	120.8	176.5	171.5	55.3	176.1	134	68	67	67	0.017	1.001	6.830	826
105	16.722	16.479		0.16	0.16	1.30	1.05	0.36	79	79	67	2.57	2	71	0.044	99	98	343.3	0.71	0.82	11.6	120.8	176.4	171.4	55.3	176.0	131	68	67	67	0.016	1.001	6.832	826
106	16.880	16.639		0.16	0.16	1.30	1.05	0.36	79	79	67	2.57	2	71	0.044	98	100	343.8	-0.51	0.84	14.1	120.7	176.2	171.2	55.2	175.9	128	67	67	67	0.016	1.001	6.994	845
107	17.039	16.798		0.16	0.16	1.30	1.05	0.36	79	79	67	2.56	2	71	0.043	100	100	343.9	-0.12	0.84	11.6	120.6	176.1	171.1	55.2	175.8	127	67	67	67	0.016	1.001	6.989	844
108	17.198	16.957		0.16	0.16	1.31	1.05	0.36	79	79	67	2.56	2	71	0.048	95	95	344.0	-0.09	0.86	15.4	120.4	176.0	171.0	55.2	175.6	126	67	67	67	0.016	1.001	7.159	863
109	17.357	17.116		0.16	0.16	1.31	1.05	0.36	79	79	67	2.57	2	71	0.047	96	96	343.5	0.48	0.80	13.2	120.3	175.8	170.8	55.2	175.5	125	67	67	67	0.015	1.001	6.665	803
110	17.516	17.276		0.16	0.16	1.31	1.04	0.36	79	79	67	2.58	2	71	0.045	98	99	343.4	0.15	0.88	15.5	120.2	175.7	170.7	55.2	175.4	124	67	67	67	0.016	1.001	7.318	880
111	17.675	17.434		0.16	0.16	1.31	1.05	0.36	79	79	67	2.58	2	71	0.046	97	96	343.6	-0.20	0.80	15.5	120.0	175.6	170.7	55.3	175.2	123	67	67	67	0.015	1.001	6.690	804
112	17.835	17.594		0.16	0.16	1.30	1.05	0.36	79	79	67	2.58	2	71	0.043	101	101	343.6	0.01	0.80	15.6	120.0	175.5	170.6	55.2	175.2	122	67	67	67	0.015	1.001	6.671	801
113	17.994	17.753		0.16	0.16	1.31	1.04	0.36	79	79	67	2.57	2	71	0.042	101	101	343.8	-0.21	0.87	15.6	119.8	175.3	170.3	55.2	175.0	121	67	67	67	0.014	1.001	7.250	869
114	18.153	17.912		0.16	0.16	1.31	1.05	0.36	79	79	67	2.56	2	71	0.047	96	96	343.9	-0.16	0.86	15.5	119.6	175.2	170.2	55.2	174.8	121	67	67	67	0.014	1.001	7.146	856

Elapsed Time	Particulate Sampling Data																Fuel Weight, lb		Flow, gpm		Temperature Data, oF											
	Gas Meter Cubic Feet (1)	Gas Meter Cubic Feet (2)	Gas Meter Cubic Feet (amb)	Sample Rate, cfm (1)	Sample Rate, cfm (2)	Orifice dH (1)	Orifice dH (2)	Orifice dH (amb)	Meter oF (1)	Meter oF (2)	Meter oF (amb)	Meter Vac. In. Hg. (1)	Meter Vac. In. Hg. (2)	Dilution Tunnel Temp.	Dilution Tunnel dP	Pro. Rate (%) (1)	Pro. Rate (%) (2)	Scale Reading	Weight Change	Load Side Liquid Flow Rate	Boiler Side Liquid Flow Rate (optional)	Thermopile ΔT	Boiler to Heat Exch. Temp.	Heat Exch to Boiler Temp.	Inlet Load Temp.	Outlet Load Temp.	Stack	Filter (1)	Filter (2)	Ambient		Specific Heat of Inlet Water (BTU/lb-°F)	Mass Flow Rate of Inlet Water (lb/min)	Heat Output, Btu
115	18.311	18.072		0.16	0.16	1.31	1.05	0.36	79	79	67	2.57	2	71	0.046	96	98	343.7	0.21	0.85	14.1	119.5	175.1	170.0	55.2	174.7	120	67	67	67	0.014	1.001	7.080	847
116	18.470	18.231		0.16	0.16	1.30	1.04	0.36	79	79	67	2.57	2	71	0.046	97	97	343.7	0.05	0.86	14.1	119.3	174.9	169.9	55.3	174.6	119	67	67	67	0.015	1.001	7.130	852
117	18.629	18.390		0.16	0.16	1.31	1.05	0.36	79	79	67	2.56	2	71	0.042	101	101	343.7	-0.05	0.80	15.5	119.2	174.8	169.8	55.2	174.4	119	67	67	67	0.014	1.001	6.670	796
118	18.788	18.550		0.16	0.16	1.31	1.05	0.36	79	79	67	2.56	2	71	0.046	97	98	344.0	-0.29	0.80	15.6	119.1	174.6	169.8	55.2	174.3	118	67	67	67	0.014	1.001	6.665	795
119	18.948	18.709		0.16	0.16	1.31	1.05	0.36	79	79	67	2.57	2	71	0.045	98	98	343.4	0.64	0.84	15.5	118.9	174.5	169.6	55.2	174.2	118	67	67	67	0.015	1.001	6.998	833
120	19.107	18.868		0.16	0.16	1.31	1.05	0.36	79	79	67	2.57	2	71	0.043	100	100	344.0	-0.62	0.82	14.3	118.7	174.3	169.5	55.2	174.0	117	67	67	67	0.015	1.001	6.838	813
121	19.267	19.028		0.16	0.16	1.30	1.05	0.36	79	79	67	2.56	2	71	0.045	98	99	343.1	0.89	0.82	14.7	118.5	174.2	169.4	55.3	173.9	117	67	67	67	0.014	1.001	6.875	816
122	19.426	19.187		0.16	0.16	1.31	1.05	0.36	79	79	67	2.56	2	71	0.046	97	97	343.3	-0.20	0.82	15.4	118.5	174.1	169.3	55.2	173.8	116	67	67	67	0.014	1.001	6.831	811
123	19.585	19.346		0.16	0.16	1.30	1.05	0.36	79	79	67	2.57	2	71	0.048	95	95	343.7	-0.41	0.88	15.5	118.3	173.9	169.1	55.2	173.6	114	67	67	67	0.014	1.001	7.318	867
124	19.744	19.506		0.16	0.16	1.30	1.05	0.36	79	80	67	2.57	2	71	0.043	100	101	343.7	-0.03	0.88	14.3	118.2	173.8	169.0	55.2	173.5	115	67	67	67	0.014	1.001	7.317	866
125	19.903	19.665		0.16	0.16	1.31	1.05	0.36	79	79	67	2.57	2	71	0.047	96	96	343.8	-0.09	0.82	15.4	118.1	173.7	168.9	55.3	173.3	116	67	67	67	0.014	1.001	6.831	808
126	20.062	19.824		0.16	0.16	1.31	1.05	0.36	79	79	67	2.56	2	71	0.045	98	98	343.4	0.39	0.86	15.5	118.1	173.6	168.9	55.2	173.3	115	67	67	67	0.014	1.001	7.159	846
127	20.221	19.984		0.16	0.16	1.30	1.05	0.36	79	80	67	2.57	2	71	0.043	100	101	343.7	-0.27	0.84	14.8	117.9	173.6	168.7	55.2	173.1	114	67	67	67	0.014	1.001	6.996	826
128	20.380	20.143		0.16	0.16	1.31	1.05	0.36	79	80	67	2.56	2	71	0.041	102	102	343.5	0.21	0.88	15.5	117.7	173.3	168.4	55.2	172.9	114	67	67	67	0.014	1.001	7.318	863
129	20.539	20.303		0.16	0.16	1.31	1.05	0.36	79	80	67	2.56	2	71	0.044	99	100	343.3	0.24	0.82	14.4	117.6	173.1	168.3	55.2	172.8	114	67	67	67	0.014	1.001	6.835	805
130	20.699	20.461		0.16	0.16	1.31	1.05	0.36	79	80	67	2.57	2	71	0.047	96	95	343.3	-0.04	0.84	15.6	117.5	173.0	168.2	55.2	172.7	113	67	67	67	0.014	1.001	6.995	823
131	20.858	20.620		0.16	0.16	1.29	1.03	0.36	79	80	67	2.59	2	81	0.043	101	101	343.6	-0.26	0.84	15.5	117.3	172.9	168.1	55.2	172.6	148	68	68	67	0.036	1.001	6.994	822
132	21.017	20.780		0.16	0.16	1.31	1.05	0.36	79	80	67	2.57	2	72	0.043	100	101	343.0	0.53	0.82	15.6	117.2	172.8	168.0	55.3	172.4	149	67	67	67	0.019	1.001	6.831	801
133	21.176	20.938		0.16	0.16	1.31	1.05	0.36	79	80	67	2.56	2	71	0.043	100	99	343.4	-0.32	0.84	15.5	117.1	172.8	168.0	55.2	172.4	139	67	67	67	0.018	1.001	6.995	820
134	21.335	21.097		0.16	0.16	1.31	1.05	0.36	79	80	67	2.56	2	71	0.047	96	96	343.4	0.01	0.78	15.5	117.1	172.6	167.9	55.2	172.3	133	67	67	67	0.017	1.001	6.511	763
135	21.494	21.257		0.16	0.16	1.30	1.05	0.36	79	80	67	2.56	2	71	0.043	100	101	343.5	-0.17	0.78	15.6	116.9	172.5	167.6	55.2	172.1	129	67	67	67	0.016	1.001	6.510	762
136	21.652	21.416		0.16	0.16	1.31	1.05	0.36	79	80	67	2.56	2	71	0.042	101	101	343.4	0.08	0.82	15.5	116.9	172.4	167.6	55.2	172.1	126	67	67	67	0.015	1.001	6.834	800
137	21.812	21.576		0.16	0.16	1.31	1.05	0.36	79	80	67	2.57	2	71	0.047	96	96	343.3	0.13	0.84	15.5	116.6	172.2	167.4	55.2	171.8	123	67	67	67	0.015	1.001	6.995	817
138	21.971	21.735		0.16	0.16	1.31	1.04	0.36	79	80	67	2.57	2	71	0.045	98	98	343.2	0.11	0.82	15.6	116.6	172.1	167.4	55.2	171.8	123	67	67	67	0.015	1.001	6.831	797
139	22.130	21.894		0.16	0.16	1.31	1.05	0.36	79	80	67	2.56	2	71	0.043	100	100	343.0	0.25	0.82	15.5	116.4	171.9	167.2	55.2	171.6	120	67	67	67	0.014	1.001	6.830	796
140	22.290	22.054		0.16	0.16	1.30	1.05	0.36	79	80	67	2.56	2	71	0.045	98	98	343.5	-0.53	0.80	15.1	116.2	171.8	167.0	55.2	171.4	120	67	67	67	0.014	1.001	6.672	776
141	22.449	22.213		0.16	0.16	1.31	1.04	0.36	79	80	67	2.57	2	71	0.048	95	95	343.0	0.45	0.86	15.5	116.2	171.6	166.9	55.2	171.3	118	67	67	67	0.014	1.001	7.157	832
142	22.608	22.372		0.16	0.16	1.31	1.05	0.36	79	80	67	2.57	2	71	0.043	100	100	343.5	-0.48	0.84	15.5	116.0	171.5	166.8	55.2	171.2	118	67	67	67	0.014	1.001	6.994	812
143	22.768	22.533		0.16	0.16	1.30	1.05	0.36	79	80	67	2.56	2	71	0.046	97	98	343.4	0.16	0.82	15.4	115.9	171.4	166.6	55.2	171.0	118	67	67	67	0.014	1.001	6.836	793
144	22.926	22.691		0.16	0.16	1.31	1.05	0.36	79	80	67	2.57	2	71	0.045	97	97	343.4	-0.08	0.80	15.6	115.8	171.3	166.6	55.2	170.9	116	67	67	67	0.014	1.001	6.672	774
145	23.086	22.851		0.16	0.16	1.31	1.05	0.36	79	80	67	2.58	2	71	0.045	98	98	343.0	0.39	0.82	15.5	115.7	171.1	166.4	55.1	170.8	115	67	67	67	0.014	1.001	6.839	792
146	23.244	23.011		0.16	0.16	1.31	1.05	0.36	79	80	67	2.57	2	71	0.043	99	101	343.4	-0.34	0.82	15.5	115.5	171.0	166.2	55.2	170.6	115	67	67	67	0.014	1.001	6.864	794
147	23.404	23.169		0.16	0.16	1.31	1.05	0.36	79	80	67	2.56	2	71	0.046	97	96	343.3	0.09	0.78	15.5	115.4	170.9	166.1	55.2	170.5	115	67	67	67	0.014	1.001	6.525	754
148	23.563	23.329		0.16	0.16	1.31	1.05	0.36	79	80	67	2.58	2	71	0.045	98	98	343.1	0.22	0.78	15.6	115.2	170.7	165.9	55.1	170.4	114	67	67	67	0.013	1.001	6.510	751
149	23.723	23.489		0.16	0.16	1.31	1.05	0.36	79	80	67	2.57	2	71	0.043	101	101	343.0	0.05	0.84	15.4	115.1	170.6	165.7	55.1	170.3	113	67	67	67	0.013	1.001	6.985	805
150	23.882	23.648		0.16	0.16	1.31	1.05	0.36	79	80	67	2.56	2	71	0.044	99	99	343.0	0.05	0.81	15.5	115.0	170.5	165.6	55.1	170.1	113	67	67	67	0.013	1.001	6.724	774
151	24.041	23.807		0.16	0.16	1.31	1.05	0.36	79	80	67	2.58	2	71	0.045	98	98	343.3	-0.36	0.84	15.5	114.8	170.3	165.4	55.1	169.9	112	67	67	67	0.012	1.001	6.995	804
152	24.201	23.967		0.16	0.16	1.31	1.05	0.36	79	80	67	2.57	2	71	0.044	99	100	343.6	-0.30	0.84	15.5	114.7	170.1	165.4	55.2	169.8	112	67	67	67	0.013	1.001	6.971	800
153	24.360	24.126		0.16	0.16	1.30	1.05	0.36	79	80	67	2.56	2	71	0.046	97	97	343.6	0.08	0.80	15.5	114.5	170.0	165.3	55.2	169.7	112	67	67	67	0.013	1.001	6.685	766
154	24.519	24.285		0.16	0.16	1.31	1.05	0.36	79	80	67	2.57	2	71	0.043	100	100	342.9	0.70	0.80	15.6	114.5	169.9	165.2	55.1	169.6	111	67	67	67	0.012	1.001	6.668	764
155	24.678	24.445		0.16	0.16	1.30	1.05	0.36	79	80	67	2.57	2	71	0.044	99	100	342.9	-0.02	0.84	15.5	114.3	169.8	165.1	55.2	169.5	112	67	67	67	0.012	1.001	6.995	800
156	24.837	24.604		0.16	0.16	1.31	1.05	0.36	79	80	67	2.58	2	71	0.041	102	102	343.5	-0.61	0.86	15.5	114.1	169.6	164.9	55.1	169.3	111	67	67	67	0.013	1.001	7.154	817
157	24.996	24.764		0.16	0.16	1.31	1.05	0.36	79	80	67	2.58	2	71	0.045	98	98	343.1	0.34	0.82	15.5	114.0	169.4	164.7	55.1	169.2	111	67	67	67	0.013	1.001	6.830	780
158	25.155	24.923		0.16	0.16	1.31	1.05	0.36	79	80	67	2.57	2	71	0.047	96	96	343.7	-0.55	0.88	15.5	113.9	169.3	164.7	55.1	169.0	111	67	67	67	0.012	1.001	7.317	835
159	25.315	25.082		0.16	0.16	1.31	1.05	0.36	79	80	67	2.56	2	71	0.045	98	98	343.5	0.19	0.78	15.5	113.8	169.2	164.5	55.1	168.9	110	67	67	67	0.012	1.001	6.510	742
160	25.475	25.243		0.16	0.16	1.31	1.05	0.36	79	80	67	2.58	2	71	0.046	97	98	342.3	1.16	0.88	15.6	113.5	169.1	164.4	55.2	168.7	109	67	67	67	0.012	1.001	7.316	832
161	25.634	25.401		0.16	0.16	1.31	1.05	0.36	79	80	67	2.58	2	71	0.046	97	96	342.6	-0.29	0.84	15.5	113.5	169.0	164.2	55.2	168.6	109	67	67	67	0.011	1.001	6.993	794
162	25.793	25.560		0.16	0.16	1.29	1.04	0.36	79	80	67	2.59	2	80	0.042	102	102	342.8	-0.19	0.84	15.6	113.3	168.7	164.1	55.2	168.5	144	68	68	67	0.035	1.001	6.993	793
163	25.952	25.720		0.16	0.16	1.30	1.05	0.36	79	80	67	2.56	2	72	0.044	99	100	342.5	0.33	0.86	15.6	113.2	168.6	164.0	55.2	168.3	143	67	67	67	0.018	1.001	7.155	811
164	26.111	25.879		0.16	0.16	1.31	1.05	0.36	79	80	67	2.56	2	71	0.046	97	97	343.1	-0.61	0.86	15.5	113.1	168.6	164.1	55.1	168.3	136	67	67	67	0.017	1.001	7.156	811
165	26.270	26.038		0.16	0.16	1.31	1.05	0.36	79	80	67	2.57	2	71	0.042	101	101	343.3	-0.22	0.84	15.6	113.0	168.5	163.9	55.1	168.2	131	67	67	67	0.016	1.001	6.991	791
166	26.429	26.198		0.16	0.16	1.31	1.05	0.36	79	80	67	2.57	2	71	0.045	98	98	343.1	0.24	0.80	15.5	112.9	168.4	163.7	55.1	168.0	127	67	67	67	0.015	1.001	6.674	754
167	26.588	26.357		0.16	0.16	1.31	1.05	0.36	79	80	67	2.56	2	71	0.048	95	95	343.4	-0.32	0.82	15.6	112.8	168.2	163.6	55.1	167.9	124	67	67	67	0.015	1.001	6.831	771
168	26.747	26.516		0.16	0.16	1.31	1.05	0.36	79	80	67	2.56	2	71	0.046	97	97	342.9	0.52	0.84	15.5	112.6	168.0	163.4	55.1	167.7	123	67	67	67	0.014	1.001	6.992	788
169	26.907	26.676		0.16	0.16	1.31	1.05	0.36	79	80	67	2.58	2	71	0.042	102	102	343.0	-0.10	0.82	15.6	112.5	167.9	163.2	55.1	167.6	119	67	67	67	0.014	1.001	6.833	770
170	27.067	26.835		0.16	0.16	1.30	1.05	0.36	79	80	67	2.57	2	71	0.046	97	97	342.4	0.54	0.80	15.5	112.4	167.8	163.2	55.1	167.5	118	67	67	67	0.014	1.001	6.671	751
171	27.226	26.994		0.16	0.16	1.31	1.05	0.36	79	80	67	2.56	2	71	0.047	96	96	342.9	-0.46	0.82	15.5	112.3	167.7	163.0	55.1	167.4	117	67	67	67	0.013	1.001	6.832	768
172	27.385	27.154		0.16	0.16	1.30	1.05	0.36	79	80	67	2.57	2	71	0.047	96	96	343.3	-0.44	0.80	15.5	112.1	167.5	162.9	55.1	167.2	117	67	67	67	0.014	1.001	6.670	748
173	27.544	27.313		0.16	0.16	1.31	1.05	0.36	79	80	67	2.58	2	71	0.042	101	101	342.8	0.57	0.80	15.5	111.9	167.4	162.7	55.1	167.1	116	67	67	67	0.013	1.001	6.671	748
174	27.703	27.473		0.16	0.16	1.31	1.05	0.36	79	80	67	2.57	2	71	0.043	100	101	342.8	-0.05	0.84	15.6	111.8	167.3	162.6	55.2	167.0	115	67	67	67	0.013	1.001	6.997	783
175	27.862	27.632		0.16	0.16	1.31	1.05	0.36	79	80	67	2.58	2	71	0.046	97	97	342.8	0.05	0.82	15.5	111.6	167.1	162.5	55.2	166.8	113	67	67	67	0.013	1.001	6.832	763
176	28.021	27.791		0.16	0.16	1.31	1.05	0.36	79	80	67	2.56	2	71	0.042	101	101	342.8	-0.02	0.80	15.6	111.5	167.0	162.4	55.2	166.7	114	67	67	67	0.012	1.001	6.677	746

Elapsed Time	Particulate Sampling Data																Fuel Weight, lb		Flow, gpm		Temperature Data, oF												
	Gas Meter Cubic Feet (1)	Gas Meter Cubic Feet (2)	Gas Meter Cubic Feet (amb)	Sample Rate, cfm (1)	Sample Rate, cfm (2)	Orifice dH (1)	Orifice dH (2)	Orifice dH (amb)	Meter oF (1)	Meter oF (2)	Meter oF (amb)	Meter Vac. In. Hg. (1)	Meter Vac. In. Hg. (2)	Dilution Tunnel Temp.	Dilution Tunnel dP	Pro. Rate (%) (1)	Pro. Rate (%) (2)	Scale Reading	Weight Change	Load Side Liquid Flow Rate	Boiler Side Liquid Flow Rate (optional)	Thermopile ΔT	Boiler to Heat Exch. Temp.	Heat Exch to Boiler Temp.	Inlet Load Temp.	Outlet Load Temp.	Stack	Filter (1)	Filter (2)	Ambient		Specific Heat of Inlet Water (BTU/lb-°F)	Mass Flow Rate of Inlet Water (lb/min)	Heat Output, Btu
177	28.181	27.951		0.16	0.16	1.31	1.04	0.36	79	80	67	2.56	2	71	0.041	103	103	343.0	-0.19	0.82	15.6	111.4	166.8	162.3	55.2	166.5	112	67	67	67	0.013	1.001	6.837	763
178	28.340	28.110		0.16	0.16	1.31	1.05	0.36	79	80	67	2.56	2	71	0.044	99	99	343.6	-0.65	0.88	15.6	111.3	166.8	162.1	55.1	166.5	112	67	67	67	0.012	1.001	7.316	815
179	28.499	28.270		0.16	0.16	1.31	1.05	0.36	79	80	67	2.57	2	71	0.046	97	97	342.9	0.69	0.84	15.5	111.1	166.5	162.0	55.1	166.3	113	67	67	67	0.012	1.001	6.998	779
180	28.659	28.430		0.16	0.16	1.31	1.05	0.36	79	80	67	2.56	2	71	0.048	95	95	342.9	0.08	0.84	15.5	111.0	166.5	161.9	55.1	166.1	112	67	67	67	0.011	1.001	6.999	778
181	28.818	28.588		0.16	0.16	1.31	1.05	0.36	79	80	67	2.56	2	71	0.046	97	96	343.3	-0.48	0.82	15.5	110.9	166.3	161.7	55.2	166.0	111	67	67	67	0.012	1.001	6.810	756
182	28.978	28.748		0.16	0.16	1.31	1.05	0.36	79	80	67	2.56	2	71	0.047	96	96	343.1	0.18	0.88	15.5	110.7	166.2	161.6	55.2	165.9	110	67	67	67	0.011	1.001	7.320	812
183	29.137	28.908		0.16	0.16	1.30	1.05	0.36	79	80	67	2.57	2	71	0.043	100	101	342.6	0.59	0.85	15.6	110.6	166.0	161.4	55.2	165.8	110	67	67	67	0.012	1.001	7.104	786
184	29.296	29.067		0.16	0.16	1.30	1.05	0.36	79	80	67	2.57	2	71	0.042	101	101	343.1	-0.51	0.85	15.6	110.5	165.9	161.4	55.2	165.6	110	67	67	67	0.012	1.001	7.097	785
185	29.455	29.226		0.16	0.16	1.31	1.05	0.36	79	80	67	2.57	2	71	0.042	101	101	343.2	-0.12	0.86	15.5	110.4	165.8	161.2	55.1	165.5	110	67	67	67	0.011	1.001	7.156	791
186	29.614	29.386		0.16	0.16	1.31	1.05	0.36	79	80	67	2.56	2	71	0.046	97	97	342.8	0.35	0.87	15.5	110.2	165.7	161.1	55.1	165.4	110	67	67	67	0.011	1.001	7.243	799
187	29.773	29.545		0.16	0.16	1.31	1.04	0.36	79	80	67	2.58	2	71	0.045	98	98	343.2	-0.36	0.82	15.5	110.0	165.5	160.9	55.1	165.2	108	67	67	67	0.011	1.001	6.835	753
188	29.933	29.705		0.16	0.16	1.31	1.05	0.36	79	80	67	2.56	2	71	0.047	96	96	343.2	0.01	0.80	15.4	109.9	165.3	160.8	55.1	165.0	108	67	67	67	0.011	1.001	6.670	734
189	30.092	29.865		0.16	0.16	1.31	1.04	0.36	79	80	67	2.58	2	71	0.047	96	96	343.1	0.05	0.82	15.6	109.8	165.2	160.7	55.1	164.9	108	67	67	67	0.012	1.001	6.848	753
190	30.252	30.023		0.16	0.16	1.31	1.05	0.36	79	80	67	2.57	2	71	0.046	97	96	343.1	0.08	0.80	15.5	109.6	165.1	160.5	55.2	164.8	108	67	67	67	0.012	1.001	6.672	732
191	30.411	30.184		0.16	0.16	1.31	1.05	0.36	79	80	67	2.56	2	71	0.046	97	98	343.0	0.01	0.80	15.6	109.6	165.0	160.5	55.1	164.7	108	67	67	67	0.011	1.001	6.669	732
192	30.571	30.343		0.16	0.16	1.30	1.05	0.36	79	80	67	2.57	2	71	0.047	96	96	342.7	0.34	0.80	15.6	109.4	164.8	160.4	55.1	164.5	108	67	67	67	0.011	1.001	6.672	731
193	30.730	30.502		0.16	0.16	1.29	1.04	0.36	79	80	67	2.59	2	80	0.041	103	103	342.8	-0.04	0.84	15.4	109.2	164.7	160.3	55.1	164.3	142	68	68	67	0.028	1.001	6.996	765
194	30.888	30.662		0.16	0.16	1.31	1.05	0.36	79	80	67	2.58	2	71	0.043	99	101	342.5	0.25	0.80	15.6	109.2	164.5	160.1	55.1	164.3	138	67	67	67	0.017	1.001	6.669	729
195	31.048	30.820		0.16	0.16	1.31	1.05	0.36	79	80	67	2.57	2	71	0.045	98	97	342.8	-0.33	0.78	15.4	109.1	164.5	160.1	55.1	164.2	133	67	67	67	0.016	1.001	6.506	710
196	31.207	30.980		0.16	0.16	1.31	1.05	0.36	79	80	67	2.58	2	71	0.043	100	101	342.7	0.17	0.78	15.6	108.9	164.3	159.9	55.1	164.0	130	67	67	67	0.016	1.001	6.513	710
197	31.366	31.140		0.16	0.16	1.31	1.05	0.36	79	80	67	2.56	2	71	0.043	100	101	342.8	-0.15	0.80	15.6	108.8	164.2	159.7	55.1	163.9	127	67	67	67	0.014	1.001	6.673	727
198	31.525	31.299		0.16	0.16	1.31	1.05	0.36	79	80	67	2.56	2	71	0.043	100	100	342.5	0.29	0.84	15.5	108.7	164.1	159.7	55.1	163.8	125	67	67	67	0.014	1.001	6.996	761
199	31.685	31.459		0.16	0.16	1.31	1.05	0.36	79	80	67	2.56	2	71	0.044	99	100	342.8	-0.31	0.84	15.5	108.6	164.0	159.6	55.1	163.7	122	67	67	67	0.014	1.001	6.996	761
200	31.845	31.619		0.16	0.16	1.31	1.05	0.36	79	80	67	2.56	2	71	0.048	95	95	342.9	-0.02	0.80	15.5	108.4	163.8	159.4	55.2	163.6	121	67	67	67	0.014	1.001	6.669	724
201	32.004	31.778		0.16	0.16	1.31	1.05	0.36	79	80	67	2.56	2	71	0.045	98	98	342.3	0.53	0.84	15.6	108.3	163.7	159.3	55.1	163.4	119	67	67	67	0.013	1.001	6.998	759
202	32.164	31.937		0.16	0.16	1.31	1.05	0.36	79	80	67	2.56	2	71	0.045	98	98	342.6	-0.32	0.84	15.5	108.2	163.5	159.1	55.1	163.3	118	67	67	67	0.013	1.001	6.998	758
203	32.323	32.097		0.16	0.16	1.30	1.05	0.36	79	80	67	2.56	2	71	0.041	102	103	342.4	0.22	0.88	15.5	108.0	163.4	159.0	55.1	163.1	117	67	67	67	0.013	1.001	7.321	792
204	32.482	32.256		0.16	0.16	1.31	1.05	0.36	79	80	67	2.56	2	71	0.046	97	97	342.7	-0.27	0.86	15.5	107.9	163.3	158.8	55.1	163.0	116	67	67	67	0.014	1.001	7.157	773
205	32.641	32.416		0.16	0.16	1.30	1.05	0.36	79	80	67	2.56	2	71	0.046	97	97	342.3	0.38	0.86	15.6	107.6	163.1	158.6	55.2	162.8	115	67	67	67	0.013	1.001	7.160	771
206	32.800	32.576		0.16	0.16	1.31	1.04	0.36	79	80	67	2.57	2	71	0.044	99	100	342.5	-0.22	0.86	15.5	107.5	163.0	158.4	55.1	162.7	114	67	67	67	0.012	1.001	7.160	771
207	32.959	32.735		0.16	0.16	1.31	1.05	0.36	79	80	67	2.56	2	71	0.042	101	101	342.1	0.40	0.90	15.5	107.4	162.9	158.3	55.1	162.6	113	67	67	67	0.012	1.001	7.484	805
208	33.118	32.894		0.16	0.16	1.31	1.05	0.36	79	80	67	2.56	2	70	0.043	100	100	342.5	-0.37	0.86	15.6	107.3	162.7	158.1	55.1	162.4	112	67	67	67	0.012	1.001	7.158	769
209	33.278	33.054		0.16	0.16	1.31	1.04	0.36	79	80	67	2.56	2	71	0.045	98	98	342.6	-0.13	0.82	15.4	107.1	162.6	158.0	55.1	162.3	112	67	67	67	0.012	1.001	6.834	733
210	33.438	33.213		0.16	0.16	1.30	1.05	0.36	79	80	67	2.57	2	70	0.045	98	98	342.5	0.19	0.86	15.6	107.1	162.5	158.0	55.1	162.2	111	67	67	67	0.012	1.001	7.159	768
211	33.597	33.373		0.16	0.16	1.31	1.05	0.36	79	80	67	2.57	2	70	0.044	99	99	342.5	-0.03	0.82	15.6	107.0	162.3	157.9	55.1	162.1	111	67	67	67	0.012	1.001	6.835	732
212	33.756	33.533		0.16	0.16	1.31	1.05	0.36	79	80	67	2.58	2	71	0.045	98	98	342.8	-0.28	0.84	15.5	106.8	162.2	157.7	55.1	161.9	110	67	67	67	0.012	1.001	6.994	748
213	33.916	33.692		0.16	0.16	1.30	1.05	0.36	79	80	67	2.57	2	71	0.044	99	99	342.7	0.02	0.78	15.5	106.6	162.0	157.5	55.1	161.7	110	67	67	67	0.012	1.001	6.514	695
214	34.075	33.852		0.16	0.16	1.30	1.05	0.36	79	80	67	2.57	2	71	0.048	95	95	342.3	0.48	0.88	15.5	106.6	162.0	157.5	55.1	161.7	110	67	67	67	0.011	1.001	7.315	780
215	34.234	34.011		0.16	0.16	1.31	1.05	0.36	79	80	67	2.56	2	70	0.046	97	97	342.9	-0.61	0.80	15.5	106.4	161.9	157.5	55.2	161.6	108	67	67	67	0.011	1.001	6.680	712
216	34.393	34.171		0.16	0.16	1.31	1.05	0.36	79	80	67	2.56	2	71	0.046	97	97	342.6	0.26	0.84	15.5	106.2	161.7	157.3	55.1	161.4	107	67	67	67	0.011	1.001	6.996	744
217	34.552	34.331		0.16	0.16	1.31	1.05	0.36	79	80	67	2.57	2	71	0.045	98	98	342.2	0.40	0.82	15.5	106.1	161.5	157.1	55.1	161.3	106	67	67	67	0.011	1.001	6.855	728
218	34.712	34.490		0.16	0.16	1.31	1.05	0.36	79	80	67	2.58	2	71	0.042	102	101	343.0	-0.73	0.82	15.6	106.0	161.5	157.1	55.1	161.2	106	67	67	67	0.011	1.001	6.843	727
219	34.871	34.649		0.16	0.16	1.31	1.05	0.36	79	80	67	2.57	2	71	0.046	97	97	343.0	-0.02	0.82	15.6	105.9	161.3	156.9	55.1	161.0	106	67	67	67	0.011	1.001	6.875	729
220	35.031	34.810		0.16	0.16	1.31	1.04	0.36	79	80	67	2.57	2	70	0.045	98	99	343.4	-0.41	0.82	15.5	105.8	161.2	156.9	55.1	160.9	106	67	67	67	0.011	1.001	6.806	721
221	35.191	34.969		0.16	0.16	1.31	1.05	0.36	79	80	67	2.56	2	71	0.045	98	98	342.9	0.48	0.85	15.6	105.6	161.0	156.8	55.1	160.7	106	67	67	67	0.010	1.001	7.121	753
222	35.350	35.128		0.16	0.16	1.31	1.05	0.36	79	80	67	2.56	2	70	0.044	99	99	341.9	1.02	0.82	15.5	105.5	160.8	156.6	55.1	160.6	106	67	67	67	0.011	1.001	6.834	722
223	35.509	35.288		0.16	0.16	1.30	1.05	0.36	79	80	67	2.57	2	71	0.043	100	101	342.3	-0.44	0.80	15.6	105.4	160.8	156.5	55.1	160.5	106	67	67	67	0.011	1.001	6.669	703
224	35.668	35.447		0.16	0.16	1.29	1.04	0.36	79	80	67	2.59	2	78	0.042	102	102	342.0	0.37	0.84	15.6	105.2	160.6	156.3	55.1	160.3	139	68	67	67	0.024	1.001	6.993	737
225	35.827	35.606		0.16	0.16	1.31	1.05	0.36	79	80	67	2.58	2	71	0.044	99	99	342.5	-0.58	0.80	15.5	105.2	160.5	156.2	55.1	160.3	134	67	67	67	0.018	1.001	6.671	702
226	35.986	35.766		0.16	0.16	1.31	1.05	0.36	79	80	67	2.56	2	71	0.046	97	97	342.6	-0.03	0.86	15.5	105.0	160.4	156.1	55.1	160.1	129	67	67	67	0.018	1.001	7.157	752
227	36.145	35.925		0.16	0.16	1.31	1.05	0.36	79	80	67	2.57	2	70	0.046	97	97	342.3	0.28	0.82	15.6	104.9	160.3	155.9	55.1	160.0	126	67	67	67	0.018	1.001	6.836	718
228	36.305	36.084		0.16	0.16	1.31	1.05	0.36	79	80	67	2.58	2	71	0.046	97	97	341.8	0.46	0.86	15.5	104.7	160.1	155.8	55.1	159.8	124	67	67	67	0.017	1.001	7.160	751
229	36.464	36.245		0.16	0.16	1.31	1.05	0.36	79	80	67	2.58	2	71	0.044	99	100	342.2	-0.36	0.80	15.6	104.6	160.0	155.7	55.1	159.7	122	67	67	67	0.016	1.001	6.675	699
230	36.624	36.404		0.16	0.16	1.31	1.05	0.36	79	80	67	2.57	2	71	0.045	98	98	341.9	0.31	0.88	15.5	104.5	159.9	155.6	55.1	159.6	119	67	67	67	0.016	1.001	7.321	766
231	36.784	36.563		0.16	0.16	1.30	1.05	0.36	79	80	67	2.58	2	71	0.045	98	98	342.1	-0.27	0.80	15.5	104.4	159.8	155.5	55.1	159.5	118	67	67	67	0.016	1.001	6.669	697
232	36.943	36.723		0.16	0.16	1.31	1.05	0.36	79	80	67	2.58	2	70	0.044	99	99	340.6	1.60	0.84	15.5	104.3	159.7	155.4	55.1	159.4	117	67	67	67	0.016	1.001	6.996	731
233	37.102	36.882		0.16	0.16	1.30	1.04	0.36	79	80	67	2.59	2	77	0.046	97	97	339.8	0.80	0.84	15.5	104.1	159.4	155.1	55.1	159.2	141	67	67	67	0.038	1.001	6.998	729
234	37.261	37.041		0.16	0.16	1.29	1.03	0.36	79	80	67	2.60	2	84	0.043	101	101	338.6	1.10	0.84	15.4	104.0	159.5	155.0	55.1	159.1	162	68	67	67	0.034	1.001	6.996	728
235	37.419	37.199		0.16	0.16	1.30	1.04	0.36	79	80	67	2.59	2	87	0.043	101	101	337.4	1.30	0.82	15.5	104.4	159.9	155.5	55.1	159.5	198	68	67	67	0.039	1.001	6.831	714
236	37.578	37.357		0.16	0.16	1.31	1.04	0.36	79	80	67	2.61	2	93	0.040	106	105	334.9	2.48	0.86	15.4	105.1	160.8	156.4	55.1	160.2	224	69	68	67	0.045	1.001	7.158	753
237	37.736	37.516		0.16	0.16	1.31	1.04	0.36	79	80	67	2.60	2	97	0.044	101	101	334.3	0.58	0.84	15.6	106.0	161.4	157.1	55.1	161.1	242	69	68	67	0.049	1.001	6.993	742
238	37.894	37.673		0.16	0.16	1.31	1.04	0.36	79	80	67	2.60	2	101	0.044	101	100	332.5	1.77	0.84	15.5	106.9	162.5	158.1	55.1	162.0	254	70	69	67	0.048	1.001	6.998	749

Elapsed Time	Particulate Sampling Data																Fuel Weight, lb		Flow, gpm		Temperature Data, oF												
	Gas Meter Cubic Feet (1)	Gas Meter Cubic Feet (2)	Gas Meter Cubic Feet (amb)	Sample Rate, cfm (1)	Sample Rate, cfm (2)	Orifice dH (1)	Orifice dH (2)	Orifice dH (amb)	Meter oF (1)	Meter oF (2)	Meter oF (amb)	Meter Vac. In. Hg. (1)	Meter Vac. In. Hg. (2)	Dilution Tunnel Temp.	Dilution Tunnel dP	Pro. Rate (%) (1)	Pro. Rate (%) (2)	Scale Reading	Weight Change	Load Side Liquid Flow Rate	Boiler Side Liquid Flow Rate (optional)	Thermopile ΔT	Boiler to Heat Exch. Temp.	Heat Exch to Boiler Temp.	Inlet Load Temp.	Outlet Load Temp.	Stack	Filter (1)	Filter (2)	Ambient		Specific Heat of Inlet Water (BTU/lb-°F)	Mass Flow Rate of Inlet Water (lb/min)	Heat Output, Btu
239	38.053	37.832		0.16	0.16	1.30	1.04	0.36	79	80	67	2.62	2	103	0.045	101	101	330.5	2.04	0.82	15.5	107.8	163.5	159.0	55.1	162.9	264	71	70	67	0.050	1.001	6.835	737
240	38.211	37.988		0.16	0.16	1.30	1.04	0.36	79	80	67	2.62	2	105	0.040	106	105	329.0	1.44	0.84	15.5	109.0	164.7	160.3	55.1	164.2	271	72	71	67	0.056	1.001	6.999	764
241	38.369	38.146		0.16	0.16	1.29	1.03	0.36	79	80	67	2.64	2	107	0.044	101	102	327.6	1.41	0.82	15.6	109.9	165.7	161.1	55.2	165.1	276	73	72	67	0.054	1.001	6.832	752
242	38.526	38.302		0.16	0.16	1.30	1.03	0.36	79	80	67	2.64	2	110	0.044	101	101	325.6	2.05	0.80	15.5	111.1	166.9	162.2	55.2	166.3	283	74	73	67	0.053	1.001	6.670	742
243	38.684	38.459		0.16	0.16	1.29	1.03	0.36	79	80	67	2.65	2	110	0.037	111	110	323.8	1.78	0.82	15.5	112.3	168.1	163.4	55.2	167.5	285	75	73	67	0.052	1.001	6.839	769
244	38.841	38.615		0.16	0.16	1.29	1.01	0.36	79	80	67	2.65	2	110	0.039	107	107	322.4	1.41	0.88	15.5	113.4	169.3	164.4	55.2	168.6	286	76	74	67	0.056	1.001	7.323	831
245	38.999	38.770		0.16	0.16	1.29	1.01	0.36	79	80	67	2.67	2	112	0.044	102	100	320.8	1.55	0.84	15.5	114.5	170.4	165.6	55.2	169.8	289	76	74	67	0.057	1.001	6.998	803
246	39.156	38.926		0.16	0.16	1.28	1.01	0.36	79	80	67	2.68	2	112	0.042	104	103	319.1	1.75	0.90	15.5	115.7	171.5	166.6	55.2	170.9	291	77	75	67	0.056	1.001	7.471	866
247	39.312	39.081		0.16	0.16	1.27	1.01	0.36	79	80	67	2.70	2	112	0.040	106	105	318.4	0.65	0.81	15.5	116.8	172.7	167.7	55.2	172.0	291	77	75	67	0.051	1.001	6.746	789
248	39.468	39.236		0.16	0.15	1.28	1.00	0.36	79	80	67	2.70	2	113	0.042	103	103	316.3	2.18	0.78	15.4	118.1	173.8	168.9	55.1	173.2	293	78	76	67	0.059	1.001	6.531	772
249	39.625	39.391		0.16	0.16	1.28	1.00	0.36	79	80	67	2.68	2	113	0.043	103	101	314.7	1.58	0.84	15.4	119.2	175.0	170.0	55.1	174.3	295	79	77	67	0.052	1.001	7.016	837
250	39.782	39.545		0.16	0.15	1.27	1.00	0.36	79	80	67	2.70	2	112	0.044	101	99	313.6	1.09	0.85	14.2	120.3	176.2	171.2	55.2	175.5	294	79	77	67	0.054	1.001	7.052	850
251	39.938	39.700		0.16	0.16	1.27	0.99	0.36	79	80	67	2.70	2	113	0.044	101	100	311.4	2.20	0.86	15.5	121.5	177.4	172.3	55.2	176.7	295	79	77	67	0.055	1.001	7.155	870
252	40.094	39.853		0.16	0.15	1.26	0.99	0.36	79	80	67	2.72	2	113	0.039	107	105	310.3	1.10	0.82	12.0	122.6	178.5	173.4	55.2	177.8	296	80	78	67	0.056	1.001	6.829	838
253	40.250	40.007		0.16	0.15	1.27	0.97	0.36	79	80	67	2.72	2	114	0.043	102	101	309.2	1.10	0.86	10.4	123.8	179.8	174.5	55.2	179.0	298	80	78	67	0.049	1.001	7.155	887
254	40.406	40.159		0.16	0.15	1.26	0.96	0.36	79	80	67	2.72	2	114	0.043	102	99	307.1	2.12	0.84	8.3	125.0	180.8	175.4	55.2	180.1	298	80	78	67	0.056	1.001	6.996	875
255	40.562	40.310		0.16	0.15	1.25	0.97	0.36	79	80	67	2.73	2	114	0.045	100	97	305.8	1.25	0.83	10.4	126.3	182.1	176.8	55.1	181.4	299	81	78	67	0.055	1.001	6.943	878
256	40.717	40.463		0.16	0.15	1.26	0.93	0.36	79	80	67	2.74	2	114	0.041	104	103	305.1	0.75	0.82	5.1	127.2	183.1	177.7	55.2	182.4	299	81	79	67	0.056	1.001	6.832	870
257	40.872	40.613		0.16	0.15	1.26	0.93	0.36	79	80	67	2.73	2	92	0.043	99	96	304.8	0.24	0.80	6.5	127.9	183.6	178.3	55.2	183.0	268	78	77	67	0.044	1.001	6.668	854
258	41.028	40.763		0.16	0.15	1.25	0.94	0.36	79	80	67	2.73	2	86	0.044	98	95	304.6	0.26	0.84	6.1	128.3	184.0	178.7	55.2	183.5	247	77	76	67	0.042	1.001	6.996	899
259	41.184	40.914		0.16	0.15	1.24	0.94	0.36	79	80	67	2.73	2	82	0.040	103	100	304.6	0.02	0.82	4.7	128.6	184.3	179.0	55.2	183.8	235	76	75	67	0.040	1.001	6.832	880
260	41.338	41.066		0.15	0.15	1.24	0.95	0.36	79	80	67	2.76	2	81	0.046	94	93	303.9	0.63	0.88	4.5	128.8	184.5	179.2	55.2	184.0	226	74	74	67	0.040	1.001	7.316	944
261	41.493	41.217		0.16	0.15	1.24	0.95	0.36	79	80	67	2.76	2	77	0.043	98	96	303.5	0.40	0.82	3.4	128.9	184.6	179.4	55.2	184.1	221	73	73	67	0.039	1.001	6.833	882
262	41.649	41.369		0.16	0.15	1.24	0.95	0.36	79	80	67	2.74	2	76	0.045	96	94	303.6	-0.03	0.78	2.4	129.2	184.8	179.5	55.2	184.4	216	72	72	67	0.039	1.001	6.508	842
263	41.804	41.521		0.16	0.15	1.24	0.95	0.36	79	80	67	2.75	2	75	0.042	99	97	303.6	0.00	0.82	6.5	129.3	185.0	179.6	55.2	184.5	212	71	72	67	0.037	1.001	6.833	885
264	41.959	41.673		0.16	0.15	1.24	0.95	0.36	79	80	67	2.75	2	75	0.045	96	94	303.5	0.01	0.90	5.2	129.4	185.0	179.8	55.2	184.6	209	71	71	67	0.037	1.001	7.482	969
265	42.115	41.825		0.16	0.15	1.25	0.95	0.36	79	80	67	2.72	2	74	0.044	97	95	304.2	-0.67	0.84	3.9	129.4	185.1	179.8	55.2	184.6	206	70	70	67	0.036	1.001	6.997	907
266	42.270	41.977		0.16	0.15	1.24	0.96	0.36	79	80	67	2.74	2	74	0.042	99	97	303.1	1.07	0.80	3.9	129.6	185.2	179.9	55.2	184.7	203	69	69	67	0.036	1.001	6.674	866
267	42.425	42.129		0.15	0.15	1.25	0.96	0.36	79	80	67	2.72	2	72	0.044	96	95	303.5	-0.34	0.84	3.0	129.6	185.2	179.8	55.2	184.7	203	68	68	67	0.033	1.001	6.995	908
268	42.581	42.282		0.16	0.15	1.25	0.96	0.36	79	80	67	2.72	2	72	0.045	96	94	303.3	0.19	0.82	3.9	129.7	185.3	179.9	55.2	184.8	202	68	67	67	0.033	1.001	6.832	887
269	42.738	42.435		0.16	0.15	1.25	0.96	0.36	79	80	67	2.71	2	72	0.043	99	96	304.1	-0.76	0.80	2.6	129.7	185.3	179.9	55.1	184.8	200	68	67	67	0.033	1.001	6.671	866
270	42.893	42.588		0.16	0.15	1.25	0.97	0.36	79	80	67	2.71	2	72	0.046	94	93	302.8	1.30	0.82	0.9	129.7	185.3	179.9	55.1	184.8	197	67	66	67	0.033	1.001	6.831	887
271	43.049	42.741		0.16	0.15	1.25	0.96	0.36	79	80	67	2.70	2	72	0.046	95	93	303.3	-0.53	0.80	3.9	129.6	185.3	179.8	55.1	184.8	195	67	66	67	0.033	1.001	6.674	866
272	43.205	42.894		0.16	0.15	1.26	0.97	0.36	79	80	67	2.68	2	72	0.043	98	96	303.7	-0.42	0.88	1.5	129.7	185.2	179.8	55.1	184.8	192	66	65	67	0.033	1.001	7.319	950
273	43.362	43.048		0.16	0.15	1.26	0.97	0.36	79	80	67	2.68	2	72	0.045	97	95	303.1	0.59	0.80	5.6	129.6	185.2	179.9	55.1	184.7	189	66	66	67	0.033	1.001	6.669	865
274	43.519	43.202		0.16	0.15	1.26	0.98	0.36	79	80	67	2.68	2	72	0.044	98	96	303.0	0.10	0.86	3.4	129.6	185.2	179.9	55.2	184.8	187	66	65	67	0.033	1.001	7.163	929
275	43.675	43.355		0.16	0.15	1.26	0.98	0.36	79	80	67	2.68	2	72	0.044	97	95	303.4	-0.44	0.86	2.4	129.6	185.1	179.8	55.1	184.7	184	66	65	67	0.031	1.001	7.155	928
276	43.832	43.510		0.16	0.16	1.27	0.98	0.36	79	80	67	2.68	2	72	0.046	96	94	303.5	-0.03	0.78	2.3	129.6	185.2	179.8	55.2	184.8	181	66	65	67	0.031	1.001	6.508	844
277	43.989	43.664		0.16	0.15	1.27	0.99	0.36	79	80	67	2.67	2	72	0.043	99	97	303.4	0.07	0.80	2.9	129.5	185.1	179.9	55.1	184.6	179	66	65	67	0.031	1.001	6.688	867
278	44.146	43.819		0.16	0.16	1.28	0.99	0.36	79	80	67	2.65	2	71	0.044	98	96	303.7	-0.29	0.86	4.1	129.5	185.1	179.7	55.2	184.7	177	66	65	67	0.030	1.001	7.158	928
279	44.303	43.974		0.16	0.15	1.27	1.00	0.36	79	80	67	2.65	2	72	0.045	97	95	303.8	-0.09	0.84	6.0	129.4	185.0	179.6	55.2	184.6	175	66	65	67	0.030	1.001	6.993	906
280	44.460	44.131		0.16	0.16	1.27	1.00	0.36	79	80	67	2.65	2	72	0.046	96	96	303.8	0.02	0.80	3.5	129.4	185.0	179.6	55.2	184.6	173	66	65	67	0.029	1.001	6.669	864
281	44.618	44.287		0.16	0.16	1.28	1.01	0.36	79	80	67	2.65	2	72	0.044	98	97	304.2	-0.42	0.84	1.4	129.4	185.0	179.6	55.1	184.5	170	66	65	67	0.029	1.001	6.993	906
282	44.775	44.444		0.16	0.16	1.28	1.01	0.36	79	80	67	2.63	2	71	0.043	99	99	303.5	0.73	0.87	6.6	129.3	185.0	179.5	55.1	184.5	168	66	65	67	0.028	1.001	7.226	936
283	44.933	44.601		0.16	0.16	1.28	1.03	0.36	79	80	67	2.63	2	71	0.046	96	96	303.8	-0.34	0.82	5.3	129.3	184.9	179.5	55.1	184.5	166	66	65	67	0.028	1.001	6.851	887
284	45.091	44.760		0.16	0.16	1.27	1.02	0.36	79	80	67	2.63	2	71	0.045	97	98	303.6	0.24	0.80	5.2	129.2	184.8	179.4	55.2	184.4	164	66	66	67	0.028	1.001	6.672	863
285	45.249	44.918		0.16	0.16	1.28	1.04	0.36	79	80	67	2.63	2	72	0.046	96	96	303.6	-0.07	0.83	3.4	129.2	184.7	179.3	55.1	184.3	163	66	66	67	0.027	1.001	6.886	891
286	45.406	45.077		0.16	0.16	1.28	1.04	0.36	79	80	67	2.62	2	71	0.043	99	100	303.9	-0.25	0.84	3.9	129.2	184.7	179.3	55.1	184.3	161	66	66	67	0.026	1.001	6.995	905
287	45.564	45.236		0.16	0.16	1.28	1.04	0.36	79	80	67	2.62	2	71	0.046	96	97	303.8	0.07	0.80	3.9	129.2	184.6	179.2	55.1	184.3	159	66	66	67	0.026	1.001	6.669	863
288	45.722	45.394		0.16	0.16	1.29	1.05	0.36	79	80	67	2.62	2	71	0.042	101	101	303.7	0.12	0.80	6.5	129.0	184.6	179.3	55.1	184.1	157	66	66	67	0.025	1.001	6.670	861
289	45.880	45.554		0.16	0.16	1.29	1.05	0.36	79	80	67	2.62	2	71	0.046	96	97	303.8	-0.16	0.84	5.6	129.0	184.5	179.1	55.1	184.1	156	66	66	67	0.025	1.001	6.998	904
290	46.039	45.713		0.16	0.16	1.29	1.04	0.36	79	80	67	2.61	2	71	0.042	101	101	303.8	0.08	0.86	3.7	128.9	184.4	179.1	55.1	184.1	155	66	66	67	0.025	1.001	7.156	924
291	46.197	45.872		0.16	0.16	1.29	1.05	0.36	79	80	67	2.61	2	71	0.050	92	93	303.0	0.76	0.84	5.2	128.8	184.3	178.9	55.1	183.9	153	66	66	67	0.025	1.001	6.995	902
292	46.355	46.033		0.16	0.16	1.29	1.04	0.36	79	80	67	2.61	2	71	0.045	97	99	304.4	-1.39	0.84	4.5	128.8	184.4	178.9	55.1	183.9	152	66	66	67	0.024	1.001	6.996	902
293	46.513	46.191		0.16	0.16	1.29	1.04	0.36	79	80	67	2.62	2	71	0.043	99	99	303.5	0.87	0.86	3.9	128.7	184.2	178.9	55.2	183.9	150	66	66	67	0.024	1.001	7.157	923
294	46.671	46.351		0.16	0.16	1.30	1.05	0.36	79	80	67	2.60	2	71	0.041	102	103	304.1	-0.54	0.76	6.0	128.7	184.2	178.9	55.1	183.8	148	66	66	67	0.023	1.001	6.348	818
295	46.830	46.510		0.16	0.16	1.29	1.05	0.36	79	80	67	2.61	2	71	0.044	99	99	304.4	-0.34	0.80	4.8	128.6	184.1	178.7	55.1	183.7	147	66	66	67	0.023	1.001	6.673	859
296	46.988	46.669		0.16	0.16	1.30	1.05	0.36	79	80	67	2.59	2	71	0.046	96	97	304.1	0.25	0.76	8.1	128.5	184.1	178.7	55.1	183.6	146	66	66	67	0.022	1.001	6.345	816
297	47.147	46.828		0.16	0.16	1.30	1.05	0.36	79	80	67	2.59	2	71	0.044	99	99	303.4	0.70	0.78	4.8	128.4	183.9	178.5	55.1	183.5	145	66	66	67	0.022	1.001	6.511	837
298	47.307	46.988		0.16	0.16	1.30	1.05	0.36	79	80	67	2.59	2	71	0.043	101	101	303.7	-0.24	0.78	8.4	128.3	183.8	178.4	55.1	183.4	145	66	66	67	0.022	1.001	6.513	836
299	47.465	47.147		0.16	0.16	1.30	1.04	0.36	79	80	67	2.58	2	71	0.044	98	99	303.7	-0.06	0.86	2.6	128.3	183.7	178.4	55.1	183.4	143	66	66	67	0.022	1.001	7.156	919
300	47.624	47.307		0.16	0.16	1.29	1.05	0.36	79	80	67	2.58	2	71	0.045	98	98	303.9	-0.18	0.78	3.9	128.2	183.7	178.4	55.1	183.3	141	66	66	67	0.021	1.001	6.507	835

Elapsed Time	Particulate Sampling Data																Fuel Weight, lb		Flow, gpm		Temperature Data, oF												
	Gas Meter Cubic Feet (1)	Gas Meter Cubic Feet (2)	Gas Meter Cubic Feet (amb)	Sample Rate, cfm (1)	Sample Rate, cfm (2)	Orifice dH (1)	Orifice dH (2)	Orifice dH (amb)	Meter oF (1)	Meter oF (2)	Meter oF (amb)	Meter Vac. In. Hg. (1)	Meter Vac. In. Hg. (2)	Dilution Tunnel Temp.	Dilution Tunnel dP	Pro. Rate (%) (1)	Pro. Rate (%) (2)	Scale Reading	Weight Change	Load Side Liquid Flow Rate	Boiler Side Liquid Flow Rate (optional)	Thermopile ΔT	Boiler to Heat Exch. Temp.	Heat Exch to Boiler Temp.	Inlet Load Temp.	Outlet Load Temp.	Stack	Filter (1)	Filter (2)	Ambient		Specific Heat of Inlet Water (BTU/lb-°F)	Mass Flow Rate of Inlet Water (lb/min)	Heat Output, Btu
301	47.783	47.466		0.16	0.16	1.30	1.05	0.36	79	80	67	2.58	2	71	0.046	97	97	303.4	0.48	0.80	7.7	128.1	183.6	178.1	55.1	183.1	140	66	66	67	0.022	1.001	6.668	855
302	47.942	47.625		0.16	0.16	1.30	1.05	0.36	79	80	67	2.57	2	71	0.047	96	96	304.0	-0.57	0.86	5.6	128.0	183.5	178.2	55.1	183.1	139	66	66	67	0.021	1.001	7.163	918
303	48.101	47.785		0.16	0.16	1.31	1.04	0.36	79	80	67	2.58	2	71	0.045	98	98	305.0	-0.95	0.82	7.7	127.9	183.4	178.1	55.1	183.0	138	66	66	67	0.021	1.001	6.831	875
304	48.260	47.944		0.16	0.16	1.30	1.04	0.36	79	80	67	2.59	2	71	0.043	100	100	304.0	0.99	0.84	5.9	127.8	183.3	178.0	55.1	182.9	137	66	66	67	0.020	1.001	6.998	895
305	48.419	48.103		0.16	0.16	1.31	1.05	0.36	79	80	67	2.58	2	71	0.045	98	98	304.3	-0.30	0.84	5.3	127.6	183.2	177.9	55.1	182.7	136	66	66	67	0.020	1.001	6.993	894
306	48.578	48.263		0.16	0.16	1.31	1.05	0.36	79	80	67	2.58	2	71	0.045	98	98	304.0	0.29	0.90	3.3	127.5	183.1	177.9	55.1	182.6	135	66	66	67	0.020	1.001	7.481	955
307	48.738	48.422		0.16	0.16	1.30	1.05	0.36	79	80	67	2.57	2	71	0.039	106	105	304.8	-0.80	0.80	7.7	127.5	183.0	177.7	55.1	182.6	134	66	66	67	0.020	1.001	6.670	851
308	48.897	48.581		0.16	0.16	1.30	1.05	0.36	79	80	67	2.59	2	71	0.046	97	97	303.8	0.97	0.86	10.4	127.4	182.9	177.7	55.1	182.5	133	66	66	67	0.019	1.001	7.149	912
309	49.056	48.741		0.16	0.16	1.30	1.04	0.36	79	80	67	2.57	2	71	0.046	97	97	303.8	-0.01	0.80	10.3	127.3	182.8	177.6	55.1	182.4	133	66	66	67	0.019	1.001	6.674	851
310	49.215	48.900		0.16	0.16	1.30	1.05	0.36	79	80	67	2.58	2	71	0.044	99	99	304.4	-0.56	0.80	9.1	127.2	182.7	177.4	55.1	182.3	133	66	66	67	0.019	1.001	6.672	850
311	49.373	49.059		0.16	0.16	1.30	1.04	0.36	79	80	67	2.59	2	71	0.041	102	102	303.8	0.59	0.82	6.0	127.0	182.6	177.3	55.1	182.2	132	67	66	67	0.019	1.001	6.833	869
312	49.532	49.219		0.16	0.16	1.31	1.04	0.36	79	80	67	2.57	2	71	0.045	98	98	304.2	-0.39	0.88	5.6	126.9	182.4	177.2	55.1	182.0	131	67	66	67	0.019	1.001	7.322	930
313	49.691	49.378		0.16	0.16	1.30	1.05	0.36	79	80	67	2.57	2	71	0.049	94	94	303.9	0.28	0.82	6.5	126.9	182.4	177.1	55.1	182.0	130	67	66	67	0.018	1.001	6.845	870
314	49.850	49.537		0.16	0.16	1.30	1.05	0.36	79	80	67	2.57	2	71	0.048	95	95	303.6	0.28	0.85	6.0	126.8	182.3	177.1	55.1	181.9	129	67	66	67	0.018	1.001	7.070	897
315	50.009	49.697		0.16	0.16	1.31	1.04	0.36	79	80	67	2.57	2	71	0.047	96	96	304.5	-0.89	0.84	5.2	126.7	182.2	177.0	55.1	181.8	129	67	66	67	0.018	1.001	6.994	887
316	50.169	49.855		0.16	0.16	1.30	1.05	0.36	79	80	67	2.57	2	71	0.044	99	98	303.9	0.60	0.92	4.8	126.6	182.1	176.9	55.1	181.7	127	67	66	67	0.018	1.001	7.633	967
317	50.328	50.015		0.16	0.16	1.30	1.05	0.36	79	80	67	2.57	2	71	0.045	98	98	303.8	0.17	0.82	7.0	126.5	181.9	176.6	55.1	181.5	126	67	66	67	0.017	1.001	6.852	867
318	50.487	50.175		0.16	0.16	1.30	1.04	0.36	79	80	67	2.57	2	71	0.045	98	98	303.8	-0.08	0.90	6.5	126.4	181.8	176.6	55.1	181.5	126	67	66	67	0.017	1.001	7.486	947
319	50.646	50.334		0.16	0.16	1.30	1.05	0.36	79	80	67	2.58	2	71	0.045	98	98	304.3	-0.45	0.83	3.2	126.3	181.7	176.5	55.1	181.4	126	67	66	67	0.017	1.001	6.946	878
320	50.805	50.494		0.16	0.16	1.30	1.05	0.36	79	80	67	2.57	2	71	0.046	97	97	303.9	0.35	0.86	7.8	126.1	181.6	176.4	55.1	181.2	125	67	66	67	0.017	1.001	7.159	904
321	50.963	50.652		0.16	0.16	1.30	1.05	0.36	79	80	67	2.57	2	71	0.046	96	96	303.7	0.19	0.88	7.4	126.0	181.4	176.2	55.1	181.1	124	67	66	67	0.017	1.001	7.320	923
322	51.122	50.812		0.16	0.16	1.30	1.04	0.36	79	80	67	2.58	2	71	0.045	98	98	303.8	-0.09	0.80	7.8	125.8	181.3	176.1	55.1	180.9	123	67	66	67	0.016	1.001	6.672	841
323	51.281	50.972		0.16	0.16	1.30	1.05	0.36	79	80	67	2.58	2	71	0.043	100	101	304.0	-0.13	0.78	8.9	125.8	181.3	176.1	55.1	180.9	122	67	66	67	0.016	1.001	6.511	820
324	51.440	51.130		0.16	0.16	1.31	1.05	0.36	79	80	67	2.59	2	71	0.045	98	97	304.6	-0.60	0.82	8.5	125.6	181.2	176.0	55.1	180.7	122	67	67	67	0.016	1.001	6.834	859
325	51.600	51.289		0.16	0.16	1.30	1.04	0.36	79	80	67	2.58	2	71	0.043	101	100	303.7	0.84	0.82	6.7	125.6	181.0	175.8	55.1	180.7	122	67	67	67	0.016	1.001	6.835	859
326	51.759	51.449		0.16	0.16	1.30	1.05	0.36	79	80	67	2.58	2	71	0.046	97	97	304.1	-0.41	0.84	9.6	125.4	180.9	175.7	55.1	180.5	121	67	67	67	0.016	1.001	6.994	878
327	51.918	51.607		0.16	0.16	1.29	1.03	0.36	79	80	67	2.61	2	87	0.048	96	96	303.6	0.51	0.88	14.3	125.2	180.7	175.5	55.1	180.3	162	68	68	67	0.040	1.001	7.319	918
328	52.076	51.766		0.16	0.16	1.29	1.04	0.36	79	80	67	2.59	2	72	0.040	103	104	303.3	0.33	0.84	9.0	125.2	180.8	175.6	55.1	180.4	161	67	67	67	0.026	1.001	7.000	878
329	52.235	51.926		0.16	0.16	1.30	1.04	0.36	79	80	67	2.58	2	71	0.046	97	97	303.9	-0.64	0.82	6.0	125.1	180.6	175.4	55.1	180.2	152	67	66	67	0.024	1.001	6.834	856
330	52.394	52.085		0.16	0.16	1.30	1.05	0.36	79	80	67	2.58	2	71	0.042	101	101	302.9	1.05	0.86	9.0	125.0	180.5	175.3	55.2	180.2	146	67	67	67	0.023	1.001	7.157	896
331	52.553	52.245		0.16	0.16	1.30	1.05	0.36	79	80	67	2.58	2	71	0.045	98	98	303.2	-0.29	0.82	6.0	125.0	180.4	175.3	55.1	180.1	143	67	67	67	0.022	1.001	6.835	856
332	52.712	52.403		0.16	0.16	1.30	1.05	0.36	79	80	67	2.59	2	71	0.046	97	96	303.7	-0.53	0.78	12.9	124.9	180.3	175.2	55.0	180.0	139	67	67	67	0.021	1.001	6.512	815
333	52.871	52.562		0.16	0.16	1.31	1.04	0.36	79	80	67	2.58	2	71	0.043	100	100	303.3	0.45	0.82	7.8	124.8	180.2	175.2	55.1	179.8	136	67	67	67	0.020	1.001	6.833	854
334	53.031	52.723		0.16	0.16	1.30	1.04	0.36	79	80	67	2.59	2	71	0.045	98	99	303.3	-0.01	0.82	11.6	124.7	180.1	175.0	55.1	179.8	136	67	67	67	0.019	1.001	6.831	853
335	53.190	52.881		0.16	0.16	1.30	1.05	0.36	79	80	67	2.58	2	71	0.044	99	98	303.7	-0.47	0.86	7.2	124.5	179.9	174.8	55.1	179.6	133	67	67	67	0.019	1.001	7.157	892
336	53.349	53.040		0.16	0.16	1.29	1.04	0.36	79	80	67	2.58	2	71	0.045	98	98	303.8	-0.02	0.86	9.0	124.4	179.9	174.7	55.2	179.5	131	67	67	67	0.018	1.001	7.163	892
337	53.508	53.200		0.16	0.16	1.30	1.05	0.36	79	80	67	2.57	2	71	0.044	99	100	303.1	0.63	0.84	7.1	124.2	179.7	174.6	55.1	179.3	130	67	67	67	0.018	1.001	6.998	871
338	53.667	53.359		0.16	0.16	1.30	1.05	0.36	79	80	67	2.57	2	71	0.043	100	100	303.7	-0.56	0.82	6.0	124.2	179.6	174.4	55.1	179.3	129	67	67	67	0.018	1.001	6.831	849
339	53.826	53.518		0.16	0.16	1.30	1.05	0.36	80	80	67	2.57	2	70	0.041	102	102	303.3	0.42	0.80	9.5	124.0	179.5	174.4	55.1	179.1	128	67	67	67	0.018	1.001	6.675	829
340	53.985	53.678		0.16	0.16	1.30	1.04	0.36	79	80	67	2.58	2	71	0.044	99	100	303.2	0.09	0.84	10.9	123.9	179.3	174.2	55.0	179.0	126	67	67	67	0.017	1.001	6.997	868
341	54.144	53.837		0.16	0.16	1.30	1.05	0.36	79	80	67	2.59	2	70	0.045	98	98	303.4	-0.24	0.88	12.9	123.8	179.3	174.2	55.1	178.9	125	67	67	67	0.017	1.001	7.317	907
342	54.303	53.997		0.16	0.16	1.30	1.05	0.36	79	80	67	2.58	2	70	0.043	100	101	303.7	-0.25	0.82	7.2	123.7	179.1	174.1	55.1	178.8	126	67	67	67	0.017	1.001	6.840	847
343	54.463	54.156		0.16	0.16	1.30	1.04	0.36	79	80	67	2.57	2	70	0.042	102	101	303.9	-0.22	0.76	9.9	123.5	179.0	173.9	55.1	178.6	124	67	67	67	0.017	1.001	6.354	786
344	54.622	54.315		0.16	0.16	1.30	1.05	0.36	79	80	67	2.58	2	71	0.044	99	99	303.3	0.57	0.88	13.9	123.4	178.9	173.8	55.1	178.5	123	67	67	67	0.017	1.001	7.316	904
345	54.781	54.475		0.16	0.16	1.30	1.05	0.36	79	80	67	2.57	2	71	0.044	99	100	303.5	-0.17	0.84	10.4	123.4	178.7	173.6	55.1	178.4	123	67	67	67	0.016	1.001	6.996	864
346	54.940	54.634		0.16	0.16	1.30	1.04	0.36	79	80	67	2.59	2	71	0.046	97	97	303.0	0.47	0.88	7.8	123.2	178.6	173.4	55.1	178.3	122	67	67	67	0.016	1.001	7.325	903
347	55.098	54.793		0.16	0.16	1.30	1.05	0.36	79	80	67	2.57	2	71	0.044	98	99	303.5	-0.46	0.82	11.5	123.1	178.4	173.3	55.1	178.1	122	67	67	67	0.016	1.001	6.868	846
348	55.258	54.954		0.16	0.16	1.30	1.05	0.36	79	80	67	2.58	2	70	0.045	98	99	303.3	0.21	0.82	14.2	123.0	178.3	173.1	55.0	178.0	121	67	67	67	0.016	1.001	6.831	841
349	55.416	55.112		0.16	0.16	1.30	1.05	0.36	79	80	67	2.57	2	70	0.042	100	101	303.2	0.08	0.84	14.3	122.9	178.2	173.1	55.0	177.9	121	67	67	67	0.016	1.001	6.996	861
350	55.576	55.272		0.16	0.16	1.31	1.05	0.36	79	80	67	2.58	2	71	0.043	101	101	303.5	-0.34	0.88	12.0	122.7	178.1	173.0	55.0	177.8	121	67	67	67	0.016	1.001	7.320	899
351	55.735	55.432		0.16	0.16	1.30	1.04	0.36	79	80	67	2.58	2	70	0.044	99	99	303.1	0.41	0.81	14.2	122.5	177.9	172.7	55.0	177.6	120	67	67	67	0.016	1.001	6.767	830
352	55.894	55.591		0.16	0.16	1.31	1.05	0.36	79	80	67	2.58	2	71	0.045	98	98	303.8	-0.66	0.86	10.8	122.5	177.8	172.8	55.0	177.5	118	67	67	67	0.015	1.001	7.160	878
353	56.054	55.750		0.16	0.16	1.29	1.05	0.36	79	80	67	2.57	2	71	0.043	101	100	303.7	0.07	0.86	11.6	122.3	177.7	172.6	55.0	177.3	118	67	67	67	0.015	1.001	7.196	881
354	56.213	55.910		0.16	0.16	1.31	1.05	0.36	79	80	67	2.58	2	71	0.046	97	97	303.7	0.02	0.84	11.6	122.2	177.6	172.6	55.0	177.2	118	67	67	67	0.015	1.001	6.999	856
355	56.372	56.069		0.16	0.16	1.30	1.05	0.36	79	80	67	2.57	2	71	0.042	101	101	303.6	0.08	0.79	12.5	122.0	177.5	172.5	55.1	177.1	118	67	67	67	0.015	1.001	6.626	809
356	56.531	56.228		0.16	0.16	1.30	1.05	0.36	79	80	67	2.59	2	71	0.042	101	101	302.9	0.67	0.84	11.9	121.9	177.4	172.2	55.1	177.0	117	67	67	67	0.015	1.001	6.998	854
357	56.690	56.388		0.16	0.16	1.30	1.04	0.36	79	80	67	2.57	2	71	0.044	99	100	303.2	-0.33	0.84	11.5	121.8	177.2	172.1	55.1	176.9	117	67	67	67	0.015	1.001	6.996	853
358	56.848	56.546		0.16	0.16	1.29	1.03	0.36	79	80	67	2.60	2	84	0.046	97	97	302.9	0.32	0.82	14.2	121.6	176.9	171.9	55.1	176.6	157	68	68	67	0.040	1.001	6.835	832
359	57.007	56.706		0.16	0.16	1.31	1.04	0.36	79	80	67	2.58	2	72	0.045	98	99	303.4	-0.45	0.82	12.9	121.6	176.9	171.9	55.0	176.6	152	67	67	67	0.022	1.001	6.835	832
360	57.166	56.864		0.16	0.16	1.30	1.04	0.36	79	80	67	2.58	2	71	0.042	101	101	303.1	0.26	0.86	9.0	121.4	176.9	171.9	55.1	176.5	144	67	67	67	0.021	1.001	7.158	870
361	57.325	57.024		0.16	0.16	1.30	1.05	0.36	79	80	67	2.58	2	71	0.045	98	98	302.7	0.41	0.80	12.9	121.3	176.7	171.7	55.1	176.4	140	67	67	67	0.020	1.001	6.675	811
362	57.485	57.184		0.16	0.16	1.31	1.04	0.36	79	80	67	2.58	2	71	0.043	101	101	303.3	-0.55	0.86	14.1	121.1	176.6	171.6	55.1	176.2	135	67	67	67	0.019	1.001	7.159	868

Elapsed Time	Particulate Sampling Data																Fuel Weight, lb		Flow, gpm		Temperature Data, oF												
	Gas Meter Cubic Feet (1)	Gas Meter Cubic Feet (2)	Gas Meter Cubic Feet (amb)	Sample Rate, cfm (1)	Sample Rate, cfm (2)	Orifice dH (1)	Orifice dH (2)	Orifice dH (amb)	Meter oF (1)	Meter oF (2)	Meter oF (amb)	Meter Vac. In. Hg. (1)	Meter Vac. In. Hg. (2)	Dilution Tunnel Temp.	Dilution Tunnel dP	Pro. Rate (%) (1)	Pro. Rate (%) (2)	Scale Reading	Weight Change	Load Side Liquid Flow Rate	Boiler Side Liquid Flow Rate (optional)	Thermopile ΔT	Boiler to Heat Exch. Temp.	Heat Exch to Boiler Temp.	Inlet Load Temp.	Outlet Load Temp.	Stack	Filter (1)	Filter (2)	Ambient		Specific Heat of Inlet Water (BTU/lb-°F)	Mass Flow Rate of Inlet Water (lb/min)	Heat Output, Btu
363	57.644	57.342		0.16	0.16	1.30	1.04	0.36	79	80	67	2.58	2	71	0.047	96	95	302.8	0.49	0.84	9.1	121.0	176.5	171.6	55.1	176.1	133	67	67	67	0.018	1.001	6.995	848
364	57.803	57.502		0.16	0.16	1.29	1.05	0.36	79	80	66	2.57	2	71	0.045	98	98	303.3	-0.57	0.84	15.5	120.9	176.3	171.4	55.1	176.0	131	67	67	66	0.018	1.001	6.993	847
365	57.962	57.661		0.16	0.16	1.30	1.05	0.36	79	80	67	2.58	2	71	0.045	98	98	303.3	-0.01	0.86	13.1	120.8	176.3	171.3	55.1	175.9	129	67	67	67	0.017	1.001	7.153	865
366	58.121	57.820		0.16	0.16	1.30	1.04	0.36	79	80	67	2.58	2	70	0.041	102	102	302.7	0.62	0.88	14.2	120.7	176.0	171.2	55.1	175.8	128	67	67	67	0.017	1.001	7.320	885
367	58.279	57.979		0.16	0.16	1.30	1.05	0.36	79	80	67	2.57	2	70	0.040	103	104	303.2	-0.50	0.88	12.9	120.5	175.9	170.9	55.1	175.6	127	67	67	67	0.017	1.001	7.321	883
368	58.438	58.139		0.16	0.16	1.30	1.04	0.36	79	80	67	2.59	2	71	0.047	96	96	303.1	0.16	0.80	9.1	120.4	175.8	170.8	55.1	175.5	127	67	67	67	0.016	1.001	6.670	804
369	58.597	58.298		0.16	0.16	1.30	1.04	0.36	79	80	67	2.57	2	70	0.044	99	99	302.8	0.26	0.84	14.2	120.3	175.7	170.7	55.0	175.4	124	67	67	67	0.017	1.001	6.993	843
370	58.757	58.457		0.16	0.16	1.30	1.05	0.36	79	80	67	2.58	2	70	0.042	102	101	303.1	-0.35	0.88	15.5	120.1	175.5	170.6	55.0	175.2	125	67	67	67	0.016	1.001	7.320	880
371	58.916	58.617		0.16	0.16	1.30	1.04	0.36	79	80	67	2.58	2	70	0.043	100	101	302.8	0.35	0.80	15.6	120.1	175.4	170.5	55.1	175.1	124	67	67	67	0.016	1.001	6.680	803
372	59.075	58.776		0.16	0.16	1.30	1.05	0.36	79	80	67	2.57	2	71	0.043	100	100	303.2	-0.41	0.74	14.1	119.9	175.2	170.4	55.1	174.9	123	67	67	67	0.016	1.001	6.185	742
373	59.234	58.936		0.16	0.16	1.30	1.05	0.36	79	80	67	2.58	2	71	0.046	97	97	302.4	0.78	0.86	14.2	119.7	175.1	170.2	55.1	174.8	123	67	67	67	0.016	1.001	7.158	858
374	59.393	59.095		0.16	0.16	1.30	1.04	0.36	79	80	67	2.58	2	70	0.045	98	98	302.4	0.04	0.84	14.2	119.6	175.0	170.1	55.1	174.7	121	67	67	67	0.016	1.001	6.999	838
375	59.552	59.254		0.16	0.16	1.30	1.04	0.36	79	80	67	2.58	2	70	0.048	95	95	302.8	-0.41	0.80	13.3	119.5	174.9	170.0	55.0	174.5	121	67	67	67	0.015	1.001	6.671	798
376	59.711	59.414		0.16	0.16	1.30	1.04	0.36	79	80	67	2.57	2	71	0.046	97	97	303.1	-0.33	0.82	14.3	119.3	174.7	169.8	55.0	174.4	119	67	67	67	0.015	1.001	6.837	817
377	59.870	59.573		0.16	0.16	1.30	1.05	0.36	79	80	67	2.58	2	71	0.046	97	97	303.1	0.03	0.84	15.5	119.2	174.6	169.6	55.0	174.3	120	67	67	67	0.015	1.001	6.995	835
378	60.029	59.732		0.16	0.16	1.30	1.04	0.36	79	80	67	2.57	2	71	0.045	98	98	303.5	-0.39	0.80	15.6	119.1	174.5	169.5	55.1	174.2	120	67	67	67	0.015	1.001	6.675	796
379	60.188	59.892		0.16	0.16	1.30	1.04	0.36	79	80	67	2.57	2	71	0.046	97	97	303.0	0.52	0.88	15.6	118.9	174.3	169.5	55.0	174.0	119	67	67	67	0.015	1.001	7.334	873
380	60.348	60.051		0.16	0.16	1.30	1.05	0.36	79	80	67	2.58	2	71	0.045	98	98	303.3	-0.31	0.82	14.3	118.9	174.3	169.3	55.0	173.9	119	67	67	67	0.016	1.001	6.813	811
381	60.507	60.210		0.16	0.16	1.30	1.04	0.36	79	80	67	2.58	2	70	0.044	99	99	302.8	0.50	0.89	14.3	118.7	174.1	169.2	55.1	173.8	117	67	67	67	0.015	1.001	7.391	878
382	60.666	60.370		0.16	0.16	1.29	1.05	0.36	79	80	67	2.57	2	71	0.045	98	98	303.2	-0.38	0.85	14.2	118.6	174.0	169.1	55.1	173.7	118	67	67	67	0.015	1.001	7.052	837
383	60.825	60.529		0.16	0.16	1.30	1.04	0.36	79	80	67	2.59	2	71	0.045	98	98	303.5	-0.31	0.80	15.4	118.4	173.8	169.0	55.1	173.5	116	67	67	67	0.015	1.001	6.673	791
384	60.984	60.688		0.16	0.16	1.30	1.05	0.36	79	80	67	2.58	2	71	0.044	99	99	303.0	0.45	0.86	15.2	118.2	173.6	168.9	55.1	173.3	117	67	67	67	0.015	1.001	7.157	847
385	61.143	60.848		0.16	0.16	1.30	1.04	0.36	79	80	67	2.57	2	71	0.046	97	97	302.7	0.36	0.84	14.2	118.2	173.6	168.8	55.1	173.2	117	67	67	67	0.015	1.001	6.998	828
386	61.301	61.007		0.16	0.16	1.30	1.05	0.36	79	80	67	2.58	2	71	0.041	102	102	303.6	-0.87	0.86	13.6	118.0	173.5	168.6	55.1	173.1	114	67	67	67	0.015	1.001	7.134	843
387	61.461	61.166		0.16	0.16	1.30	1.04	0.36	79	80	67	2.57	2	71	0.043	101	100	302.5	1.01	0.86	15.4	117.9	173.3	168.5	55.1	172.9	116	67	67	67	0.014	1.001	7.157	845
388	61.620	61.326		0.16	0.16	1.30	1.04	0.36	79	80	67	2.58	2	71	0.047	96	96	302.3	0.20	0.82	15.5	117.7	173.2	168.3	55.1	172.8	113	67	67	67	0.015	1.001	6.834	805
389	61.779	61.484		0.16	0.16	1.29	1.03	0.36	79	80	67	2.60	2	83	0.044	100	99	302.6	-0.26	0.78	15.5	117.6	173.0	168.1	55.0	172.6	148	68	68	67	0.036	1.001	6.510	766
390	61.938	61.644		0.16	0.16	1.30	1.04	0.36	79	80	67	2.57	2	71	0.046	97	97	302.6	-0.02	0.76	15.5	117.5	172.9	168.1	55.1	172.6	143	67	66	67	0.022	1.001	6.345	747
391	62.097	61.802		0.16	0.16	1.30	1.04	0.36	79	80	67	2.58	2	71	0.045	98	97	302.1	0.55	0.78	15.6	117.4	172.7	168.0	55.0	172.4	138	67	67	67	0.020	1.001	6.514	766
392	62.256	61.962		0.16	0.16	1.29	1.05	0.36	79	80	67	2.58	2	70	0.042	101	102	302.7	-0.59	0.80	15.5	117.2	172.6	167.9	55.1	172.3	134	67	67	67	0.019	1.001	6.674	783
393	62.415	62.122		0.16	0.16	1.30	1.04	0.36	79	80	67	2.57	2	71	0.045	98	98	302.4	0.24	0.88	15.6	117.0	172.4	167.7	55.1	172.1	132	67	67	67	0.018	1.001	7.320	858
394	62.574	62.281		0.16	0.16	1.30	1.04	0.36	79	80	67	2.58	2	71	0.043	100	100	302.3	0.14	0.90	15.5	116.9	172.3	167.5	55.1	172.0	130	67	67	67	0.018	1.001	7.481	876
395	62.733	62.440		0.16	0.16	1.30	1.04	0.36	79	80	67	2.57	2	71	0.044	99	99	302.7	-0.42	0.74	15.5	116.8	172.2	167.4	55.1	171.8	127	67	67	67	0.017	1.001	6.187	723
396	62.892	62.600		0.16	0.16	1.30	1.04	0.36	79	80	67	2.57	2	71	0.043	100	101	302.6	0.15	0.78	15.4	116.6	172.1	167.2	55.1	171.7	127	67	67	67	0.017	1.001	6.510	760
397	63.051	62.759		0.16	0.16	1.30	1.04	0.36	79	80	67	2.58	2	71	0.046	97	97	302.8	-0.24	0.86	15.5	116.5	171.9	167.1	55.1	171.6	125	67	67	67	0.017	1.001	7.157	835
398	63.211	62.918		0.16	0.16	1.31	1.04	0.36	79	80	67	2.57	2	71	0.045	98	98	302.4	0.38	0.84	15.4	116.4	171.8	167.1	55.1	171.4	123	67	67	67	0.016	1.001	6.994	815
399	63.370	63.078		0.16	0.16	1.31	1.04	0.36	79	80	67	2.57	2	71	0.045	98	98	302.3	0.15	0.86	15.5	116.3	171.7	166.9	55.1	171.4	122	67	67	67	0.016	1.001	7.157	833
400	63.529	63.236		0.16	0.16	1.30	1.04	0.36	79	80	67	2.58	2	71	0.044	99	98	302.6	-0.31	0.84	15.5	116.2	171.5	166.8	55.1	171.2	122	67	67	67	0.016	1.001	7.000	814
401	63.688	63.396		0.16	0.16	1.30	1.04	0.36	79	80	67	2.58	2	71	0.044	99	100	303.2	-0.65	0.82	15.5	116.0	171.4	166.6	55.1	171.1	123	67	67	67	0.016	1.001	6.833	794
402	63.847	63.556		0.16	0.16	1.29	1.04	0.36	79	80	67	2.58	2	71	0.043	100	101	302.5	0.69	0.78	14.3	115.9	171.3	166.5	55.1	171.0	123	67	67	67	0.016	1.001	6.510	755
403	64.006	63.714		0.16	0.16	1.30	1.05	0.36	79	80	67	2.57	2	71	0.044	99	98	302.7	-0.13	0.84	15.5	115.7	171.2	166.4	55.1	170.8	121	67	67	67	0.015	1.001	6.999	811
404	64.165	63.875		0.16	0.16	1.30	1.04	0.36	79	80	67	2.57	2	70	0.046	97	98	303.2	-0.55	0.82	15.4	115.7	171.1	166.4	55.1	170.7	121	67	67	67	0.016	1.001	6.833	791
405	64.324	64.033		0.16	0.16	1.30	1.04	0.36	79	80	67	2.58	2	71	0.043	100	99	302.9	0.30	0.84	15.5	115.5	170.9	166.2	55.1	170.6	119	67	67	67	0.016	1.001	6.996	809
406	64.483	64.193		0.16	0.16	1.30	1.05	0.36	79	80	67	2.57	2	71	0.046	97	97	302.4	0.53	0.84	15.5	115.3	170.7	166.1	55.1	170.4	119	67	67	67	0.016	1.001	6.994	807
407	64.642	64.353		0.16	0.16	1.30	1.04	0.36	79	80	67	2.58	2	74	0.044	99	100	302.9	-0.47	0.78	15.5	115.1	170.6	166.0	55.2	170.3	119	67	67	67	0.014	1.001	6.529	752
408	64.802	64.511		0.16	0.16	1.29	1.04	0.36	79	80	67	2.59	2	76	0.049	95	94	303.0	-0.11	0.82	15.5	114.8	170.5	165.9	55.3	170.2	118	67	67	67	0.014	1.001	6.829	785
409	64.961	64.670		0.16	0.16	1.30	1.04	0.36	79	80	67	2.57	2	76	0.042	102	102	303.0	-0.03	0.88	15.5	114.6	170.4	165.7	55.5	170.1	117	67	67	67	0.013	1.001	7.332	841
410	65.120	64.830		0.16	0.16	1.30	1.04	0.36	79	80	67	2.58	2	78	0.042	102	103	302.7	0.33	0.80	15.4	114.3	170.3	165.7	55.6	169.9	118	68	67	67	0.013	1.001	6.662	762
411	65.279	64.989		0.16	0.16	1.29	1.04	0.36	79	80	68	2.59	2	80	0.043	101	101	303.0	-0.34	0.82	15.5	114.0	170.1	165.5	55.8	169.8	116	68	67	68	0.012	1.001	6.859	783
412	65.437	65.148		0.16	0.16	1.29	1.04	0.36	79	80	68	2.57	2	80	0.045	98	99	302.7	0.33	0.86	15.4	113.7	170.0	165.3	55.9	169.7	118	68	67	68	0.012	1.001	7.139	813
413	65.596	65.308		0.16	0.16	1.30	1.04	0.36	80	80	69	2.59	2	81	0.044	100	100	303.0	-0.35	0.83	15.5	113.5	169.9	165.3	56.1	169.6	117	68	68	69	0.012	1.001	6.960	791
414	65.755	65.466		0.16	0.16	1.29	1.04	0.36	79	80	69	2.58	2	83	0.043	101	101	302.7	0.35	0.82	15.5	113.2	169.7	165.2	56.2	169.4	117	68	68	69	0.012	1.001	6.805	771
415	65.913	65.626		0.16	0.16	1.30	1.04	0.36	80	80	69	2.58	2	82	0.041	103	104	302.7	-0.01	0.87	15.4	113.0	169.6	165.1	56.3	169.3	116	69	68	69	0.012	1.001	7.289	824
416	66.073	65.784		0.16	0.16	1.30	1.04	0.36	80	80	70	2.58	2	84	0.042	103	102	303.0	-0.33	0.82	15.5	112.5	169.5	164.9	56.7	169.1	117	69	68	70	0.011	1.001	6.802	766
417	66.232	65.943		0.16	0.16	1.29	1.04	0.36	80	80	70	2.58	2	85	0.042	102	103	303.0	0.06	0.87	15.5	112.4	169.3	164.8	56.6	169.0	114	69	68	70	0.011	1.001	7.246	815
418	66.391	66.103		0.16	0.16	1.30	1.03	0.36	80	80	71	2.58	2	86	0.046	98	99	302.6	0.41	0.83	15.5	112.1	169.2	164.7	56.8	168.9	115	70	69	71	0.011	1.001	6.954	780
419	66.549	66.261		0.16	0.16	1.29	1.03	0.36	80	80	71	2.58	2	86	0.041	103	103	302.3	0.26	0.82	15.6	111.8	169.0	164.5	57.0	168.7	116	70	69	71	0.011	1.001	6.806	761
420	66.707	66.419		0.16	0.16	1.28	1.02	0.36	80	80	71	2.60	2	93	0.043	101	101	302.3	-0.02	0.83	15.5	111.5	168.9	164.3	57.0	168.5	143	71	70	71	0.023	1.001	6.952	776
421	66.865	66.578		0.16	0.16	1.29	1.03	0.36	80	80	72	2.58	2	88	0.042	102	103	302.8	-0.46	0.83	14.2	111.3	168.7	164.3	57.1	168.4	139	71	69	72	0.019	1.001	6.955	775
422	67.024	66.736		0.16	0.16	1.29	1.04	0.36	80	80	72	2.58	2	86	0.043	101	101	302.7	0.05	0.78	15.5	111.1	168.6	164.0	57.2	168.3	136	71	70	72	0.017	1.001	6.464	719
423	67.182	66.895		0.16	0.16	1.29	1.03	0.36	80	80	72	2.60	2	87	0.047	96	97	302.4	0.33	0.76	15.5	111.0	168.5	163.9	57.2	168.2	133	71	70	72	0.016	1.001	6.302	700
424	67.341	67.053		0.16	0.16	1.29	1.04	0.36	80	80	72	2.59	2	87	0.043	101	101	302.1	0.27	0.81	15.5	110.6	168.3	163.8	57.4	168.0	131	71	70	72	0.016	1.001	6.782	751

Elapsed Time	Particulate Sampling Data																Fuel Weight, lb		Flow, gpm		Temperature Data, oF												
	Gas Meter Cubic Feet (1)	Gas Meter Cubic Feet (2)	Gas Meter Cubic Feet (amb)	Sample Rate, cfm (1)	Sample Rate, cfm (2)	Orifice dH (1)	Orifice dH (2)	Orifice dH (amb)	Meter oF (1)	Meter oF (2)	Meter oF (amb)	Meter Vac. In. Hg. (1)	Meter Vac. In. Hg. (2)	Dilution Tunnel Temp.	Dilution Tunnel dP	Pro. Rate (%) (1)	Pro. Rate (%) (2)	Scale Reading	Weight Change	Load Side Liquid Flow Rate	Boiler Side Liquid Flow Rate (optional)	Thermopile ΔT	Boiler to Heat Exch. Temp.	Heat Exch to Boiler Temp.	Inlet Load Temp.	Outlet Load Temp.	Stack	Filter (1)	Filter (2)	Ambient		Specific Heat of Inlet Water (BTU/lb-*F)	Mass Flow Rate of Inlet Water (lb/min)	Heat Output, Btu
425	67.500	67.211		0.16	0.16	1.29	1.03	0.36	80	81	73	2.59	2	87	0.043	101	101	303.0	-0.86	0.81	15.4	110.6	168.2	163.7	57.3	167.9	129	72	71	73	0.016	1.001	6.784	751
426	67.659	67.371		0.16	0.16	1.28	1.03	0.36	80	81	73	2.59	2	87	0.043	101	102	302.6	0.41	0.79	15.5	110.4	168.1	163.6	57.4	167.8	127	72	71	73	0.015	1.001	6.619	732
427	67.817	67.528		0.16	0.16	1.28	1.03	0.36	81	81	74	2.60	2	89	0.041	103	103	303.0	-0.46	0.79	15.6	110.1	168.0	163.6	57.5	167.7	127	72	71	74	0.014	1.001	6.616	730
428	67.975	67.688		0.16	0.16	1.28	1.03	0.36	81	81	74	2.58	2	89	0.043	101	102	302.6	0.45	0.81	15.6	110.0	167.8	163.3	57.6	167.6	127	72	71	74	0.013	1.001	6.783	747
429	68.133	67.846		0.16	0.16	1.29	1.03	0.36	81	81	74	2.60	2	90	0.043	101	101	302.3	0.28	0.89	15.5	109.8	167.7	163.2	57.6	167.4	125	73	72	74	0.014	1.001	7.430	817
430	68.292	68.004		0.16	0.16	1.29	1.03	0.36	81	81	74	2.60	2	89	0.040	105	105	303.0	-0.71	0.76	15.5	109.6	167.6	163.1	57.7	167.3	125	73	72	74	0.013	1.001	6.294	691
431	68.450	68.163		0.16	0.16	1.29	1.03	0.36	81	81	74	2.60	2	88	0.042	102	103	303.6	-0.54	0.83	15.5	109.5	167.5	163.0	57.7	167.2	124	73	72	74	0.012	1.001	6.942	761
432	68.610	68.321		0.16	0.16	1.28	1.03	0.36	81	81	75	2.61	2	90	0.042	103	102	302.3	1.25	0.87	15.5	109.2	167.4	163.0	57.9	167.1	124	73	72	75	0.012	1.001	7.264	794
433	68.768	68.480		0.16	0.16	1.28	1.03	0.36	81	82	75	2.60	2	90	0.043	101	101	302.4	-0.05	0.79	15.6	108.8	167.2	162.9	58.1	166.9	123	74	73	75	0.012	1.001	6.620	721
434	68.926	68.638		0.16	0.16	1.28	1.03	0.36	81	82	75	2.60	2	90	0.043	101	101	302.5	-0.11	0.81	15.5	108.9	167.1	162.6	57.8	166.7	121	74	73	75	0.013	1.001	6.777	739
435	69.084	68.796		0.16	0.16	1.28	1.03	0.36	82	82	75	2.60	2	88	0.046	97	97	303.1	-0.64	0.77	15.5	108.8	167.0	162.6	57.9	166.7	122	74	73	75	0.011	1.001	6.456	703
436	69.242	68.955		0.16	0.16	1.29	1.03	0.36	82	82	76	2.60	2	89	0.045	98	99	303.0	0.11	0.75	15.5	108.7	166.8	162.4	57.9	166.5	120	74	73	76	0.011	1.001	6.290	685
437	69.400	69.113		0.16	0.16	1.29	1.03	0.36	82	82	76	2.62	2	90	0.045	98	99	302.5	0.54	0.85	15.5	108.5	166.7	162.3	57.9	166.4	120	75	73	76	0.012	1.001	7.093	770
438	69.559	69.271		0.16	0.16	1.29	1.03	0.36	82	82	76	2.61	2	90	0.045	99	99	302.5	-0.06	0.83	15.5	108.3	166.6	162.2	58.0	166.3	119	75	74	76	0.011	1.001	6.937	752
439	69.718	69.430		0.16	0.16	1.28	1.03	0.36	82	82	76	2.61	2	88	0.048	96	96	301.8	0.74	0.83	15.6	108.1	166.4	162.0	58.0	166.1	120	75	74	76	0.011	1.001	6.946	752
440	69.876	69.588		0.16	0.16	1.28	1.03	0.36	82	83	76	2.63	2	90	0.043	101	101	302.4	-0.59	0.85	15.5	108.0	166.2	161.8	58.0	166.0	119	75	74	76	0.012	1.001	7.097	767
441	70.034	69.747		0.16	0.16	1.27	1.03	0.36	82	83	76	2.61	2	90	0.045	98	99	303.0	-0.61	0.77	15.5	107.9	166.2	161.8	58.0	165.9	120	75	74	76	0.011	1.001	6.435	695
442	70.192	69.905		0.16	0.16	1.28	1.03	0.36	83	83	77	2.62	2	91	0.042	102	102	302.8	0.16	0.81	15.5	107.7	166.0	161.6	58.1	165.7	118	76	74	77	0.011	1.001	6.753	728
443	70.351	70.063		0.16	0.16	1.28	1.03	0.36	83	83	77	2.63	2	90	0.042	102	102	302.6	0.21	0.85	15.5	107.5	166.0	161.6	58.1	165.7	119	76	75	77	0.011	1.001	7.094	764
444	70.509	70.221		0.16	0.16	1.29	1.02	0.36	83	83	77	2.62	2	90	0.046	97	97	302.1	0.46	0.86	15.5	107.3	165.8	161.4	58.2	165.5	120	76	75	77	0.011	1.001	7.131	766
445	70.667	70.380		0.16	0.16	1.29	1.03	0.36	83	83	77	2.63	2	90	0.041	103	104	301.7	0.50	0.81	15.5	107.3	165.7	161.5	58.2	165.4	120	76	75	77	0.011	1.001	6.715	721
446	70.827	70.539		0.16	0.16	1.28	1.03	0.36	83	83	78	2.63	2	91	0.044	101	100	302.6	-0.91	0.83	15.5	106.9	165.5	161.3	58.3	165.2	120	76	75	78	0.010	1.001	6.934	742
447	70.985	70.696		0.16	0.16	1.28	1.03	0.36	83	84	77	2.64	2	90	0.044	99	99	302.7	-0.13	0.91	15.5	106.9	165.4	161.1	58.3	165.1	118	76	75	77	0.010	1.001	7.580	811
448	71.143	70.855		0.16	0.16	1.28	1.03	0.36	83	84	77	2.65	2	91	0.045	98	99	302.3	0.42	0.83	15.4	106.7	165.3	161.0	58.3	165.0	119	77	76	77	0.010	1.001	6.931	740
449	71.301	71.013		0.16	0.16	1.28	1.02	0.36	84	84	78	2.66	2	91	0.046	97	97	301.9	0.42	0.85	15.5	106.4	165.2	160.9	58.4	164.9	118	77	76	78	0.010	1.001	7.091	756
450	71.460	71.172		0.16	0.16	1.28	1.03	0.36	84	84	78	2.65	2	92	0.045	99	99	302.5	-0.67	0.86	15.6	106.4	165.0	160.7	58.3	164.7	119	77	76	78	0.010	1.001	7.132	759
451	71.617	71.330		0.16	0.16	1.28	1.03	0.36	84	84	78	2.67	2	96	0.041	103	103	302.5	0.07	0.81	15.6	106.2	164.8	160.5	58.3	164.6	137	77	76	78	0.018	1.001	6.765	720
452	71.776	71.488		0.16	0.16	1.28	1.03	0.36	84	84	78	2.67	2	92	0.044	100	99	302.1	0.34	0.83	15.5	106.0	164.8	160.5	58.4	164.4	135	77	76	78	0.015	1.001	6.927	735
453	71.934	71.646		0.16	0.16	1.28	1.03	0.36	84	85	78	2.68	2	91	0.043	100	100	302.2	-0.08	0.87	15.6	105.9	164.6	160.3	58.4	164.4	133	77	76	78	0.014	1.001	7.251	769
454	72.093	71.805		0.16	0.16	1.28	1.02	0.36	84	85	78	2.68	2	92	0.044	100	100	301.9	0.30	0.87	15.5	105.8	164.5	160.2	58.5	164.2	130	78	77	78	0.014	1.001	7.252	768
455	72.251	71.963		0.16	0.16	1.28	1.03	0.36	84	85	78	2.67	2	90	0.043	100	100	302.1	-0.21	0.85	15.6	105.6	164.4	160.1	58.5	164.1	129	78	77	78	0.013	1.001	7.086	749
456	72.410	72.122		0.16	0.16	1.28	1.03	0.36	85	85	78	2.69	2	91	0.045	98	99	301.9	0.25	0.79	15.5	105.5	164.2	160.0	58.4	163.9	127	78	77	78	0.012	1.001	6.601	697
457	72.568	72.279		0.16	0.16	1.28	1.03	0.36	85	85	79	2.70	2	92	0.043	100	100	302.3	-0.48	0.81	15.5	105.4	164.2	159.9	58.5	163.9	126	78	77	79	0.012	1.001	6.765	714
458	72.726	72.438		0.16	0.16	1.28	1.03	0.36	85	85	79	2.71	2	92	0.041	103	104	302.1	0.25	0.81	15.6	105.2	163.9	159.7	58.5	163.7	126	78	77	79	0.012	1.001	6.764	713
459	72.884	72.597		0.16	0.16	1.28	1.02	0.36	85	85	79	2.70	2	92	0.043	100	101	302.1	0.01	0.85	15.5	105.1	163.9	159.6	58.5	163.6	125	78	77	79	0.011	1.001	7.084	745
460	73.043	72.755		0.16	0.16	1.28	1.03	0.36	85	86	79	2.72	2	93	0.043	101	100	301.4	0.68	0.81	15.4	104.9	163.7	159.4	58.5	163.4	123	78	78	79	0.011	1.001	6.759	710
461	73.202	72.914		0.16	0.16	1.27	1.02	0.36	85	86	79	2.71	2	92	0.043	101	101	302.1	-0.75	0.83	15.5	104.8	163.7	159.3	58.6	163.4	122	79	78	79	0.011	1.001	6.922	726
462	73.361	73.072		0.16	0.16	1.28	1.03	0.36	85	86	79	2.72	2	94	0.043	101	100	301.6	0.58	0.81	15.5	104.6	163.5	159.2	58.6	163.2	122	79	78	79	0.010	1.001	6.759	708
463	73.519	73.230		0.16	0.16	1.27	1.03	0.36	86	86	79	2.73	2	92	0.043	100	100	300.9	0.62	0.85	15.5	104.4	163.3	159.0	58.6	163.1	123	79	78	79	0.011	1.001	7.083	740
464	73.677	73.389		0.16	0.16	1.28	1.02	0.36	86	86	79	2.73	2	93	0.042	101	102	301.6	-0.63	0.81	15.5	104.2	163.2	159.0	58.7	163.0	123	79	78	79	0.010	1.001	6.752	705
465	73.835	73.547		0.16	0.16	1.28	1.03	0.36	86	86	80	2.75	2	93	0.045	98	98	301.8	-0.25	0.81	15.5	104.4	163.1	158.9	58.5	162.8	121	79	78	80	0.009	1.001	6.752	705
466	73.994	73.706		0.16	0.16	1.28	1.03	0.36	86	86	80	2.74	2	90	0.043	100	101	302.0	-0.20	0.77	15.5	104.3	163.0	158.8	58.4	162.7	121	79	78	80	0.010	1.001	6.428	671
467	74.152	73.864		0.16	0.16	1.28	1.03	0.36	86	87	80	2.75	2	89	0.040	103	103	301.8	0.19	0.87	15.5	104.3	162.9	158.6	58.3	162.6	121	79	78	80	0.010	1.001	7.238	756
468	74.312	74.022		0.16	0.16	1.28	1.03	0.36	86	87	80	2.76	2	89	0.042	102	101	301.6	0.26	0.79	15.5	104.1	162.8	158.5	58.3	162.5	119	79	78	80	0.010	1.001	6.595	688
469	74.470	74.181		0.16	0.16	1.28	1.03	0.36	86	87	80	2.75	2	88	0.043	100	100	301.3	0.28	0.87	15.5	104.0	162.6	158.3	58.4	162.4	119	79	78	80	0.010	1.001	7.244	754
470	74.629	74.339		0.16	0.16	1.27	1.03	0.36	86	87	80	2.76	2	88	0.048	95	94	302.1	-0.80	0.83	15.6	103.9	162.5	158.2	58.4	162.3	120	79	79	80	0.010	1.001	6.918	719
471	74.787	74.499		0.16	0.16	1.27	1.03	0.36	87	87	80	2.78	2	88	0.043	99	101	301.6	0.49	0.85	15.5	103.8	162.4	158.1	58.3	162.2	118	79	79	80	0.009	1.001	7.082	736
472	74.945	74.656		0.16	0.16	1.27	1.03	0.36	87	87	80	2.79	2	87	0.045	97	97	301.4	0.15	0.85	15.5	103.7	162.2	158.0	58.2	161.9	119	79	79	80	0.010	1.001	7.079	735
473	75.103	74.815		0.16	0.16	1.28	1.03	0.36	87	87	80	2.78	2	87	0.046	96	97	301.9	-0.42	0.79	15.5	103.6	162.2	157.9	58.2	161.9	118	79	79	80	0.009	1.001	6.590	684
474	75.262	74.974		0.16	0.16	1.28	1.03	0.36	87	87	80	2.79	2	87	0.042	101	101	301.2	0.64	0.81	15.4	103.6	162.0	157.8	58.2	161.7	119	79	79	80	0.009	1.001	6.758	701
475	75.421	75.132		0.16	0.16	1.27	1.03	0.36	87	87	80	2.79	2	87	0.045	98	97	301.6	-0.34	0.84	15.5	103.5	161.8	157.6	58.1	161.6	118	79	79	80	0.009	1.001	6.976	723
476	75.580	75.291		0.16	0.16	1.27	1.03	0.36	87	88	80	2.80	2	87	0.045	98	98	301.5	0.03	0.87	15.6	103.4	161.7	157.6	58.0	161.5	118	79	79	80	0.009	1.001	7.246	750
477	75.739	75.450		0.16	0.16	1.28	1.02	0.36	87	88	80	2.80	2	86	0.046	97	97	301.1	0.42	0.80	15.5	103.1	161.6	157.5	58.1	161.3	119	79	79	80	0.009	1.001	6.666	688
478	75.898	75.608		0.16	0.16	1.27	1.03	0.36	87	88	80	2.82	2	86	0.045	98	97	301.8	-0.70	0.83	15.5	103.3	161.5	157.3	57.8	161.2	118	79	79	80	0.010	1.001	6.953	719
479	76.056	75.767		0.16	0.16	1.27	1.03	0.36	88	88	79	2.81	2	86	0.041	101	102	301.0	0.82	0.86	15.5	103.6	161.3	157.1	57.4	161.0	117	79	79	79	0.011	1.001	7.208	748
480	76.214	75.925		0.16	0.16	1.28	1.03	0.36	88	88	79	2.82	2	85	0.043	99	99	300.9	0.06	0.80	15.5	103.9	161.3	157.0	57.0	160.9	117	79	79	79	0.010	1.001	6.628	690
481	76.373	76.084		0.16	0.16	1.28	1.03	0.36	88	88	79	2.82	2	84	0.044	98	99	300.8	0.11	0.82	15.4	104.1	161.0	156.8	56.8	160.8	125	79	79	79	0.026	1.001	6.852	714
482	76.531	76.243		0.16	0.16	1.27	1.03	0.36	88	88	79	2.83	2	86	0.043	99	100	300.0	0.84	0.84	15.4	104.1	160.9	156.6	56.5	160.6	134	79	78	79	0.018	1.001	6.969	727
483	76.690	76.401		0.16	0.16	1.28	1.03	0.36	88	88	78	2.82	2	82	0.046	96	96	300.8	-0.77	0.77	15.5	104.2	160.7	156.5	56.3	160.5	132	79	78	78	0.017	1.001	6.421	670
484	76.850	76.561		0.16	0.16	1.27	1.03	0.36	88	88	78	2.82	2	81	0.042	101	101	300.5	0.26	0.80	15.5	104.3	160.7	156.4	56.1	160.4	131	78	78	78	0.016	1.001	6.632	693
485	77.009	76.719		0.16	0.16	1.28	1.03	0.36	88	88	77	2.83	2	80	0.044	98	98	300.6	-0.13	0.82	15.5	104.4	160.6	156.4	56.0	160.3	129	78	78	77	0.015	1.001	6.829	714
486	77.168	76.878		0.16	0.16	1.28	1.04	0.36	88	88	77	2.83	2	79	0.044	98	98	300.5	0.12	0.82	15.5	104.4	160.4	156.2	55.8	160.2	128	78	78	77	0.015	1.001	6.804	711

Elapsed Time	Particulate Sampling Data																Fuel Weight, lb		Flow, gpm		Temperature Data, oF												
	Gas Meter Cubic Feet (1)	Gas Meter Cubic Feet (2)	Gas Meter Cubic Feet (amb)	Sample Rate, cfm (1)	Sample Rate, cfm (2)	Orifice dH (1)	Orifice dH (2)	Orifice dH (amb)	Meter oF (1)	Meter oF (2)	Meter oF (amb)	Meter Vac. In. Hg. (1)	Meter Vac. In. Hg. (2)	Dilution Tunnel Temp.	Dilution Tunnel dP	Pro. Rate (%) (1)	Pro. Rate (%) (2)	Scale Reading	Weight Change	Load Side Liquid Flow Rate	Boiler Side Liquid Flow Rate (optional)	Thermopile ΔT	Boiler to Heat Exch. Temp.	Heat Exch to Boiler Temp.	Inlet Load Temp.	Outlet Load Temp.	Stack	Filter (1)	Filter (2)	Ambient		Specific Heat of Inlet Water (BTU/lb-°F)	Mass Flow Rate of Inlet Water (lb/min)	Heat Output, Btu
487	77.326	77.038		0.16	0.16	1.28	1.03	0.36	88	88	76	2.83	2	78	0.046	95	97	300.7	-0.24	0.82	15.4	104.4	160.3	156.1	55.7	160.0	126	78	78	76	0.014	1.001	6.819	712
488	77.485	77.197		0.16	0.16	1.28	1.03	0.36	88	89	76	2.83	2	78	0.045	97	97	300.5	0.24	0.80	15.5	104.4	160.2	156.0	55.5	159.9	126	78	78	76	0.014	1.001	6.649	695
489	77.644	77.356		0.16	0.16	1.28	1.04	0.36	88	89	75	2.84	2	77	0.045	97	97	300.9	-0.36	0.82	15.4	104.4	160.1	155.9	55.4	159.8	124	77	77	75	0.014	1.001	6.813	712
490	77.803	77.516		0.16	0.16	1.28	1.04	0.36	88	89	76	2.83	2	77	0.042	100	101	300.4	0.46	0.82	15.5	104.4	160.0	155.7	55.3	159.7	122	77	77	76	0.013	1.001	6.816	713
491	77.963	77.675		0.16	0.16	1.28	1.04	0.36	88	89	75	2.83	2	76	0.043	99	99	300.3	0.14	0.82	15.5	104.3	159.8	155.5	55.1	159.5	122	77	77	75	0.013	1.001	6.815	712
492	78.122	77.834		0.16	0.16	1.27	1.03	0.36	88	89	74	2.85	2	80	0.046	96	96	299.9	0.34	0.84	15.5	104.4	159.7	155.4	55.0	159.4	142	77	77	74	0.031	1.001	6.974	729
493	78.281	77.993		0.16	0.16	1.28	1.02	0.36	88	89	75	2.85	2	87	0.042	101	101	299.3	0.66	0.82	15.5	104.4	159.6	155.3	54.8	159.2	150	77	77	75	0.030	1.001	6.821	713
494	78.441	78.151		0.16	0.16	1.28	1.03	0.36	88	89	74	2.84	2	88	0.043	101	99	297.7	1.57	0.82	15.5	104.5	159.5	155.2	54.7	159.2	172	76	77	74	0.033	1.001	6.818	713
495	78.599	78.311		0.16	0.16	1.28	1.03	0.36	88	88	74	2.85	2	90	0.044	98	100	296.2	1.51	0.82	15.5	104.7	159.7	155.3	54.6	159.3	189	76	77	74	0.037	1.001	6.816	714
496	78.758	78.469		0.16	0.16	1.28	1.03	0.36	88	88	74	2.86	2	93	0.045	98	98	294.8	1.39	0.92	15.5	105.1	160.0	155.6	54.6	159.6	208	76	77	74	0.034	1.001	7.628	802
497	78.917	78.628		0.16	0.16	1.28	1.04	0.36	88	88	73	2.85	2	97	0.042	102	102	293.8	0.95	0.86	15.5	105.9	160.8	156.4	54.5	160.4	229	76	77	73	0.040	1.001	7.144	757
498	79.076	78.787		0.16	0.16	1.28	1.04	0.36	88	88	73	2.85	2	100	0.043	101	101	292.1	1.70	0.88	15.6	106.7	161.6	157.2	54.5	161.1	243	76	77	73	0.043	1.001	7.311	781
499	79.234	78.945		0.16	0.16	1.29	1.04	0.36	88	88	73	2.86	2	103	0.044	99	100	291.0	1.11	0.82	15.5	107.3	162.2	157.7	54.4	161.7	252	77	77	73	0.045	1.001	6.821	733
500	79.393	79.104		0.16	0.16	1.29	1.03	0.36	88	88	72	2.87	2	105	0.041	104	104	289.5	1.50	0.86	15.6	108.2	163.4	158.8	54.4	162.7	260	77	77	72	0.048	1.001	7.146	774
501	79.552	79.262		0.16	0.16	1.29	1.03	0.36	88	88	73	2.87	2	107	0.043	102	101	287.6	1.94	0.76	15.5	109.2	164.2	159.7	54.4	163.6	267	77	77	73	0.051	1.001	6.334	693
502	79.711	79.420		0.16	0.16	1.28	1.03	0.36	88	88	72	2.88	2	109	0.044	101	100	286.4	1.16	0.76	15.5	110.3	165.1	160.6	54.3	164.6	273	77	77	72	0.050	1.001	6.332	699
503	79.870	79.578		0.16	0.16	1.29	1.03	0.36	87	88	72	2.88	2	111	0.044	101	100	284.6	1.80	0.80	15.5	111.4	166.4	161.7	54.4	165.8	278	78	78	72	0.047	1.001	6.656	742
504	80.028	79.735		0.16	0.16	1.27	1.02	0.36	87	88	71	2.89	2	114	0.042	103	102	283.1	1.49	0.86	15.5	112.2	167.5	162.8	54.5	166.7	283	78	78	71	0.048	1.001	7.149	803
505	80.186	79.893		0.16	0.16	1.28	1.02	0.36	87	88	71	2.90	2	115	0.043	102	102	281.7	1.45	0.84	15.5	113.3	168.7	163.9	54.7	168.0	287	79	79	71	0.052	1.001	6.986	792
506	80.344	80.050		0.16	0.16	1.28	1.02	0.36	87	88	71	2.91	2	116	0.043	102	101	279.7	2.00	0.78	15.5	114.4	169.9	165.0	54.9	169.3	291	79	79	71	0.054	1.001	6.495	744
507	80.502	80.207		0.16	0.16	1.28	1.01	0.36	87	88	71	2.90	2	116	0.041	104	104	278.6	1.06	0.78	15.5	115.5	171.1	166.2	55.0	170.4	293	80	80	71	0.051	1.001	6.496	751
508	80.659	80.363		0.16	0.16	1.28	1.01	0.36	87	88	71	2.92	2	116	0.042	103	102	276.5	2.13	0.84	14.1	116.6	172.3	167.5	55.1	171.6	294	80	80	71	0.052	1.001	6.975	814
509	80.818	80.519		0.16	0.16	1.27	1.01	0.36	87	87	71	2.92	2	116	0.045	100	99	275.6	0.94	0.82	15.6	117.7	173.5	168.7	55.2	172.8	294	81	80	71	0.049	1.001	6.827	804
510	80.975	80.675		0.16	0.16	1.26	1.00	0.36	87	87	71	2.94	2	118	0.040	105	105	273.5	2.04	0.84	12.9	118.9	174.8	169.9	55.2	174.1	298	81	81	71	0.052	1.001	6.982	831
511	81.132	80.831		0.16	0.16	1.27	1.00	0.36	87	87	71	2.95	2	118	0.042	103	102	272.3	1.21	0.80	14.2	120.0	176.0	170.9	55.3	175.3	298	82	81	71	0.054	1.001	6.658	800
512	81.288	80.986		0.16	0.16	1.26	0.99	0.36	87	87	71	2.96	2	119	0.044	100	99	271.1	1.21	0.74	10.6	121.2	177.2	172.2	55.4	176.6	300	82	81	71	0.059	1.001	6.174	749
513	81.445	81.141		0.16	0.16	1.27	0.99	0.36	87	87	71	2.96	2	119	0.044	100	99	269.3	1.82	0.80	12.8	122.5	178.6	173.6	55.4	177.9	301	83	82	71	0.050	1.001	6.653	816
514	81.603	81.295		0.16	0.15	1.26	0.98	0.36	86	87	71	2.96	2	119	0.043	102	100	267.6	1.74	0.83	7.8	123.7	179.9	174.8	55.5	179.2	303	83	82	71	0.054	1.001	6.881	852
515	81.759	81.450		0.16	0.16	1.25	0.98	0.36	86	87	71	2.97	2	117	0.042	102	102	266.1	1.42	0.84	7.0	124.7	181.0	175.8	55.6	180.3	301	83	82	71	0.056	1.001	6.995	874
516	81.916	81.603		0.16	0.15	1.26	0.98	0.36	86	87	71	2.96	2	109	0.046	98	95	265.9	0.26	0.81	15.5	125.6	181.8	176.6	55.6	181.2	292	83	82	71	0.042	1.001	6.712	844
517	82.072	81.758		0.16	0.16	1.25	0.97	0.36	86	87	71	2.97	2	93	0.041	101	101	264.9	0.94	0.86	3.9	126.1	182.3	177.0	55.6	181.7	260	81	80	71	0.042	1.001	7.140	901
518	82.229	81.912		0.16	0.15	1.25	0.98	0.36	86	86	71	2.96	2	89	0.046	96	94	264.8	0.09	0.83	4.2	126.5	182.7	177.4	55.7	182.2	243	79	79	71	0.039	1.001	6.886	872
519	82.386	82.066		0.16	0.15	1.25	0.98	0.36	86	86	71	2.97	2	86	0.039	104	102	264.6	0.23	0.82	5.8	126.8	183.0	177.7	55.7	182.5	232	78	78	71	0.037	1.001	6.814	865
520	82.543	82.221		0.16	0.16	1.24	0.98	0.36	86	86	71	2.95	2	86	0.044	98	97	263.0	1.59	0.80	3.2	127.2	183.4	178.2	55.7	182.9	224	78	78	71	0.037	1.001	6.691	852
521	82.699	82.376		0.16	0.16	1.23	0.98	0.36	86	86	71	3.00	2	81	0.043	98	97	264.0	-0.97	0.80	0.8	127.3	183.5	178.3	55.8	183.0	220	76	76	71	0.038	1.001	6.652	848
522	82.855	82.531		0.16	0.16	1.24	0.98	0.36	86	86	71	2.99	2	80	0.043	98	97	263.7	0.30	0.84	5.2	127.4	183.6	178.4	55.7	183.1	215	76	75	71	0.038	1.001	6.976	890
523	83.012	82.686		0.16	0.16	1.24	0.99	0.36	86	86	71	2.97	2	79	0.043	98	97	263.4	0.25	0.82	1.8	127.6	183.8	178.4	55.7	183.4	211	75	74	71	0.037	1.001	6.815	871
524	83.168	82.841		0.16	0.15	1.24	0.98	0.36	86	86	71	2.98	2	78	0.043	97	97	263.1	0.39	0.82	2.3	127.8	183.9	178.6	55.7	183.5	208	75	73	71	0.036	1.001	6.816	872
525	83.324	82.996		0.16	0.16	1.24	0.99	0.36	86	86	71	2.97	2	78	0.043	97	97	262.7	0.37	0.78	0.8	127.7	183.9	178.6	55.8	183.5	205	74	73	71	0.035	1.001	6.494	830
526	83.481	83.152		0.16	0.16	1.25	0.99	0.36	85	86	71	3.05	2	77	0.044	97	97	263.1	-0.40	0.84	3.6	127.9	184.0	178.7	55.8	183.6	202	73	73	71	0.034	1.001	6.978	893
527	83.640	83.309		0.16	0.16	1.28	1.04	0.36	85	86	71	2.98	2	75	0.046	96	95	263.0	0.08	0.82	3.6	127.9	184.1	178.7	55.7	183.7	203	73	72	71	0.033	1.001	6.820	874
528	83.799	83.469		0.16	0.16	1.28	1.05	0.36	85	86	71	2.97	2	75	0.045	97	98	263.3	-0.26	0.80	2.3	127.8	184.0	178.8	55.8	183.6	201	72	71	71	0.034	1.001	6.654	851
529	83.959	83.629		0.16	0.16	1.29	1.05	0.36	85	86	71	2.96	2	75	0.044	99	99	263.5	-0.23	0.88	3.1	128.0	184.1	178.8	55.7	183.7	199	72	71	71	0.034	1.001	7.301	936
530	84.118	83.789		0.16	0.16	1.28	1.05	0.36	85	86	71	2.95	2	75	0.046	96	97	263.1	0.40	0.84	0.5	128.0	184.1	178.8	55.7	183.7	197	71	71	71	0.035	1.001	6.987	895
531	84.278	83.950		0.16	0.16	1.29	1.05	0.36	85	86	71	2.93	2	75	0.043	100	101	262.6	0.52	0.88	2.6	127.9	184.1	178.9	55.8	183.7	195	71	71	71	0.035	1.001	7.307	936
532	84.437	84.112		0.16	0.16	1.29	1.06	0.36	85	85	71	2.92	2	75	0.045	97	99	262.8	-0.19	0.84	3.5	127.9	184.1	178.8	55.8	183.7	193	71	71	71	0.035	1.001	6.985	895
533	84.597	84.272		0.16	0.16	1.29	1.06	0.36	85	85	71	2.91	2	75	0.045	98	98	262.7	0.10	0.82	1.0	128.0	184.1	178.8	55.8	183.7	190	71	71	71	0.034	1.001	6.821	874
534	84.757	84.434		0.16	0.16	1.30	1.07	0.36	85	85	70	2.91	2	75	0.042	101	103	262.5	0.20	0.84	1.3	128.0	184.1	178.8	55.7	183.7	188	71	71	70	0.033	1.001	6.981	895
535	84.917	84.596		0.16	0.16	1.31	1.07	0.36	85	85	70	2.91	2	75	0.043	100	101	263.0	-0.53	0.86	0.6	127.9	184.0	178.7	55.7	183.6	185	71	71	70	0.033	1.001	7.138	914
536	85.078	84.758		0.16	0.16	1.30	1.07	0.36	85	85	70	2.91	2	75	0.043	100	101	262.5	0.49	0.86	4.2	127.9	184.0	178.7	55.7	183.7	183	71	71	70	0.033	1.001	7.140	915
537	85.238	84.919		0.16	0.16	1.31	1.07	0.36	85	85	71	2.89	2	75	0.045	98	99	262.8	-0.25	0.84	1.1	127.8	183.9	178.6	55.7	183.5	180	71	71	71	0.032	1.001	6.983	893
538	85.399	85.081		0.16	0.16	1.32	1.08	0.36	85	85	70	2.88	2	74	0.048	95	96	263.0	-0.19	0.76	1.5	127.8	183.9	178.6	55.8	183.5	179	71	71	70	0.032	1.001	6.334	810
539	85.559	85.244		0.16	0.16	1.32	1.08	0.36	85	85	70	2.87	2	75	0.043	100	102	263.3	-0.36	0.84	3.0	127.8	183.8	178.6	55.7	183.5	177	71	71	70	0.031	1.001	6.980	893
540	85.720	85.408		0.16	0.16	1.32	1.08	0.36	85	85	70	2.87	2	75	0.045	98	100	262.1	1.22	0.84	1.8	127.7	183.8	178.6	55.7	183.4	174	70	71	70	0.031	1.001	6.981	893
541	85.881	85.570		0.16	0.16	1.32	1.08	0.36	84	85	70	2.88	2	74	0.043	101	101	263.3	-1.22	0.82	3.2	127.6	183.8	178.5	55.8	183.4	172	70	71	70	0.030	1.001	6.826	872
542	86.042	85.733		0.16	0.16	1.32	1.09	0.36	84	85	70	2.87	2	74	0.046	97	99	263.7	-0.42	0.84	3.4	127.7	183.7	178.5	55.7	183.4	170	70	71	70	0.030	1.001	6.979	892
543	86.202	85.895		0.16	0.16	1.32	1.07	0.36	84	85	70	2.87	2	74	0.046	97	98	263.0	0.75	0.86	2.6	127.5	183.7	178.4	55.7	183.2	169	70	71	70	0.029	1.001	7.132	911
544	86.364	86.058		0.16	0.16	1.32	1.07	0.36	84	85	70	2.87	2	74	0.039	106	107	263.3	-0.33	0.80	1.9	127.5	183.6	178.2	55.7	183.2	168	70	71	70	0.030	1.001	6.657	850
545	86.525	86.218		0.16	0.16	1.33	1.05	0.36	84	85	70	2.87	2	74	0.042	102	101	263.1	0.21	0.78	3.1	127.5	183.6	178.2	55.7	183.2	168	70	71	70	0.029	1.001	6.493	829
546	86.687	86.378		0.16	0.16	1.32	1.05	0.36	84	85	70	2.87	2	74	0.045	99	98	263.3	-0.16	0.86	1.9	127.3	183.5	178.2	55.8	183.1	167	70	71	70	0.029	1.001	7.148	911
547	86.848	86.539		0.16	0.16	1.33	1.05	0.36	84	85	70	2.87	2	74	0.046	97	97	263.0	0.23	0.86	0.9	127.3	183.4	178.1	55.7	183.0	163	70	71	70	0.027	1.001	7.189	917
548	87.010	86.700		0.16	0.16	1.32	1.05	0.36	84	84	70	2.87	2	74	0.044	100	100	263.2	-0.21	0.84	1.8	127.4	183.4	178.1	55.6	183.0	163	70	70	70	0.028	1.001	6.988	891

Elapsed Time	Particulate Sampling Data																	Fuel Weight, lb		Flow, gpm		Temperature Data, oF													
	Gas Meter Cubic Feet (1)	Gas Meter Cubic Feet (2)	Gas Meter Cubic Feet (amb)	Sample Rate, cfm (1)	Sample Rate, cfm (2)	Orifice dH (1)	Orifice dH (2)	Orifice dH (amb)	Meter oF (1)	Meter oF (2)	Meter oF (amb)	Meter Vac. In. Hg. (1)	Meter Vac. In. Hg. (2)	Dilution Tunnel Temp.	Dilution Tunnel dP	Pro. Rate (%) (1)	Pro. Rate (%) (2)	Scale Reading	Weight Change	Load Side Liquid Flow Rate	Boiler Side Liquid Flow Rate (optional)	Thermopile ΔT	Boiler to Heat Exch. Temp.	Heat Exch to Boiler Temp.	Inlet Load Temp.	Outlet Load Temp.	Stack	Filter (1)	Filter (2)	Ambient		Specific Heat of Inlet Water (BTU/lb-°F)	Mass Flow Rate of Inlet Water (lb/min)	Heat Output, Btu
549	87.171	86.860		0.16	0.16	1.32	1.05	0.36	84	84	70	2.86	2	74	0.045	98	98	263.1	0.14	0.87	1.9	127.3	183.3	178.0	55.6	182.9	162	70	70	70	0.027	1.001	7.293	929
550	87.333	87.020		0.16	0.16	1.33	1.05	0.36	84	84	70	2.86	2	74	0.045	99	98	263.6	-0.48	0.85	2.1	127.2	183.3	178.0	55.6	182.8	159	70	70	70	0.027	1.001	7.046	898
551	87.494	87.181		0.16	0.16	1.33	1.05	0.36	84	84	70	2.86	2	74	0.042	102	102	263.2	0.40	0.78	1.3	127.1	183.2	177.9	55.6	182.7	159	70	70	70	0.026	1.001	6.495	826
552	87.655	87.341		0.16	0.16	1.55	1.05	0.36	84	84	70	3.19	2	74	0.045	98	98	262.8	0.37	0.81	1.9	127.2	183.2	177.9	55.6	182.8	159	70	70	70	0.026	1.001	6.745	859
553	87.814	87.502		0.16	0.16	1.29	1.05	0.36	84	84	70	2.82	2	73	0.043	99	101	263.7	-0.88	0.86	2.4	127.1	183.0	177.8	55.6	182.7	156	70	70	70	0.025	1.001	7.145	909
554	87.974	87.663		0.16	0.16	1.28	1.05	0.36	84	84	70	2.81	2	74	0.045	98	99	263.3	0.36	0.80	2.3	127.1	183.0	177.7	55.5	182.6	155	70	70	70	0.024	1.001	6.657	847
555	88.132	87.823		0.16	0.16	1.28	1.05	0.36	84	84	70	2.82	2	74	0.044	98	99	263.4	-0.02	0.80	0.7	127.0	183.0	177.7	55.5	182.6	154	70	70	70	0.024	1.001	6.655	846
556	88.291	87.983		0.16	0.16	1.28	1.05	0.36	84	84	70	2.82	2	73	0.043	99	100	263.4	-0.01	0.86	2.6	127.0	182.8	177.6	55.5	182.5	152	70	70	70	0.023	1.001	7.143	908
557	88.449	88.144		0.16	0.16	1.28	1.05	0.36	84	84	70	2.82	2	74	0.044	98	100	263.0	0.32	0.80	2.8	126.9	182.8	177.4	55.5	182.4	151	70	70	70	0.023	1.001	6.657	846
558	88.608	88.304		0.16	0.16	1.28	1.05	0.36	84	84	70	2.81	2	73	0.043	99	100	263.6	-0.57	0.82	1.5	126.8	182.6	177.5	55.5	182.3	151	70	70	70	0.024	1.001	6.818	866
559	88.766	88.464		0.16	0.16	1.28	1.05	0.36	84	84	70	2.81	2	73	0.044	97	99	263.0	0.65	0.84	1.9	126.7	182.6	177.4	55.5	182.1	150	70	70	70	0.023	1.001	6.980	885
560	88.925	88.625		0.16	0.16	1.28	1.05	0.36	83	84	70	2.82	2	73	0.044	98	100	263.0	-0.03	0.88	3.1	126.6	182.5	177.3	55.5	182.1	149	70	70	70	0.022	1.001	7.304	926
561	89.084	88.786		0.16	0.16	1.28	1.05	0.36	83	84	70	2.82	2	73	0.045	97	99	263.3	-0.29	0.84	1.1	126.6	182.4	177.1	55.5	182.0	148	70	70	70	0.022	1.001	6.977	884
562	89.243	88.946		0.16	0.16	1.28	1.05	0.36	83	84	70	2.82	2	73	0.043	99	100	263.1	0.16	0.86	6.7	126.5	182.3	177.1	55.5	181.9	148	70	70	70	0.021	1.001	7.139	904
563	89.401	89.106		0.16	0.16	1.27	1.05	0.36	83	84	70	2.81	2	73	0.045	97	98	263.5	-0.42	0.80	4.5	126.4	182.3	177.1	55.5	181.9	146	70	70	70	0.022	1.001	6.661	843
564	89.560	89.267		0.16	0.16	1.28	1.05	0.36	83	84	70	2.81	2	73	0.045	97	99	262.5	1.00	0.84	3.6	126.3	182.1	176.9	55.5	181.8	145	70	70	70	0.021	1.001	6.980	882
565	89.718	89.427		0.16	0.16	1.28	1.05	0.36	83	84	70	2.82	2	73	0.044	98	99	263.1	-0.57	0.84	6.5	126.2	182.0	176.9	55.5	181.7	145	70	70	70	0.021	1.001	6.983	882
566	89.877	89.587		0.16	0.16	1.28	1.05	0.36	83	84	70	2.81	2	73	0.044	98	99	263.1	-0.02	0.78	6.0	126.1	181.9	176.8	55.5	181.5	140	70	70	70	0.020	1.001	6.500	821
567	90.035	89.749		0.16	0.16	1.29	1.05	0.36	83	84	70	2.82	2	73	0.042	100	103	263.1	0.00	0.84	6.0	126.0	181.9	176.6	55.5	181.5	143	70	70	70	0.020	1.001	6.988	882
568	90.194	89.908		0.16	0.16	1.28	1.05	0.36	83	84	69	2.82	2	73	0.044	98	98	263.5	-0.41	0.80	2.6	125.9	181.8	176.5	55.5	181.4	142	70	70	69	0.020	1.001	6.660	840
569	90.353	90.069		0.16	0.16	1.28	1.05	0.36	83	84	70	2.82	2	73	0.042	101	102	263.2	0.37	0.84	2.4	125.9	181.7	176.6	55.5	181.3	141	70	70	70	0.020	1.001	6.976	879
570	90.512	90.230		0.16	0.16	1.28	1.05	0.36	83	83	70	2.81	2	73	0.045	97	99	263.1	0.11	0.86	12.9	125.8	181.6	176.4	55.5	181.2	140	70	70	70	0.019	1.001	7.145	900
571	90.670	90.390		0.16	0.16	1.28	1.05	0.36	83	83	70	2.82	2	73	0.046	96	97	263.3	-0.19	0.82	15.4	125.6	181.4	176.3	55.5	181.0	140	70	70	70	0.019	1.001	6.823	858
572	90.829	90.549		0.16	0.16	1.27	1.05	0.36	83	83	70	2.81	2	73	0.043	99	100	263.4	-0.16	0.84	2.4	125.5	181.4	176.2	55.6	181.0	135	70	70	70	0.019	1.001	6.981	877
573	90.987	90.710		0.16	0.16	1.28	1.05	0.36	83	83	70	2.81	2	73	0.047	95	97	263.4	-0.01	0.86	2.6	125.5	181.3	176.2	55.5	180.9	138	70	70	70	0.019	1.001	7.160	899
574	91.146	90.871		0.16	0.16	1.28	1.05	0.36	83	83	70	2.81	2	73	0.043	99	101	262.8	0.65	0.86	7.7	125.4	181.2	176.1	55.4	180.9	136	70	70	70	0.018	1.001	7.138	896
575	91.304	91.031		0.16	0.16	1.28	1.05	0.36	83	83	69	2.82	2	73	0.039	104	105	263.4	-0.63	0.84	4.9	125.2	181.1	176.1	55.5	180.7	138	70	70	69	0.018	1.001	6.976	875
576	91.463	91.191		0.16	0.16	1.28	1.06	0.36	83	83	69	2.81	2	73	0.045	97	98	263.5	-0.13	0.88	5.5	125.1	181.0	175.8	55.5	180.6	133	70	70	69	0.018	1.001	7.334	919
577	91.622	91.352		0.16	0.16	1.28	1.05	0.36	83	83	69	2.81	2	73	0.046	96	98	263.0	0.53	0.80	4.8	125.0	180.8	175.8	55.5	180.5	136	70	70	69	0.018	1.001	6.710	840
578	91.781	91.512		0.16	0.16	1.28	1.05	0.36	83	83	69	2.81	2	73	0.043	99	100	263.8	-0.78	0.82	7.8	124.9	180.8	175.7	55.5	180.4	132	70	69	69	0.018	1.001	6.841	855
579	91.939	91.672		0.16	0.16	1.28	1.05	0.36	83	83	69	2.82	2	73	0.044	98	99	263.5	0.33	0.83	4.9	124.8	180.6	175.5	55.5	180.2	135	70	69	69	0.018	1.001	6.897	862
580	92.098	91.833		0.16	0.16	1.27	1.05	0.36	83	83	69	2.81	2	73	0.043	99	101	263.7	-0.25	0.82	4.9	124.7	180.6	175.5	55.5	180.2	133	69	69	69	0.017	1.001	6.821	852
581	92.256	91.993		0.16	0.16	1.28	1.05	0.36	83	83	69	2.82	2	72	0.045	96	98	263.1	0.64	0.88	5.2	124.5	180.5	175.3	55.4	180.0	133	69	69	69	0.017	1.001	7.307	911
582	92.414	92.153		0.16	0.16	1.28	1.05	0.36	83	83	69	2.82	2	73	0.043	99	100	263.3	-0.25	0.85	8.8	124.5	180.3	175.1	55.5	179.9	132	69	69	69	0.017	1.001	7.048	878
583	92.572	92.314		0.16	0.16	1.28	1.04	0.36	83	83	69	2.82	2	73	0.041	101	103	263.4	-0.09	0.84	4.3	124.5	180.2	175.1	55.3	179.8	131	69	69	69	0.017	1.001	6.989	871
584	92.731	92.474		0.16	0.16	1.28	1.05	0.36	83	83	69	2.82	2	72	0.044	98	99	263.5	-0.09	0.80	7.7	124.4	180.1	175.0	55.4	179.8	129	69	69	69	0.017	1.001	6.660	829
585	92.890	92.634		0.16	0.16	1.28	1.05	0.36	83	83	69	2.82	2	73	0.046	96	97	263.0	0.50	0.82	4.2	124.3	180.0	174.9	55.4	179.7	128	69	69	69	0.017	1.001	6.823	849
586	93.049	92.795		0.16	0.16	1.28	1.05	0.36	83	83	69	2.82	2	73	0.047	95	97	262.4	0.59	0.82	3.8	124.1	179.9	174.7	55.4	179.5	129	69	69	69	0.016	1.001	6.819	847
587	93.207	92.954		0.16	0.16	1.27	1.04	0.36	83	83	69	2.83	2	81	0.046	96	97	262.6	-0.23	0.82	5.2	123.9	179.6	174.4	55.4	179.3	130	69	69	69	0.017	1.001	6.823	846
588	93.364	93.113		0.16	0.16	1.28	1.05	0.36	83	83	69	2.81	2	73	0.043	98	100	262.4	0.24	0.84	6.2	123.9	179.6	174.5	55.4	179.3	159	71	71	69	0.028	1.001	6.986	867
589	93.523	93.275		0.16	0.16	1.28	1.05	0.36	83	83	69	2.82	2	73	0.045	97	99	263.0	-0.61	0.88	7.7	123.8	179.6	174.6	55.4	179.2	154	69	69	69	0.026	1.001	7.310	906
590	93.681	93.434		0.16	0.16	1.28	1.05	0.36	82	83	69	2.82	2	72	0.045	97	97	263.1	-0.11	0.84	6.9	123.7	179.4	174.4	55.4	179.1	151	69	69	69	0.024	1.001	6.987	865
591	93.840	93.594		0.16	0.16	1.28	1.05	0.36	82	83	69	2.81	2	72	0.044	98	99	262.5	0.62	0.86	7.8	123.5	179.3	174.3	55.4	178.9	148	69	69	69	0.023	1.001	7.147	884
592	93.999	93.755		0.16	0.16	1.28	1.06	0.36	82	83	69	2.81	2	72	0.048	94	95	262.8	-0.28	0.84	5.6	123.4	179.2	174.2	55.4	178.8	145	69	69	69	0.022	1.001	6.982	863
593	94.158	93.915		0.16	0.16	1.28	1.05	0.36	82	83	69	2.82	2	73	0.043	100	100	262.6	0.23	0.80	8.3	123.3	179.1	174.2	55.4	178.7	143	69	69	69	0.022	1.001	6.666	823
594	94.316	94.075		0.16	0.16	1.28	1.05	0.36	82	83	69	2.81	2	72	0.042	100	101	262.3	0.29	0.84	6.1	123.3	179.0	174.0	55.4	178.7	140	69	69	69	0.020	1.001	6.986	862
595	94.475	94.236		0.16	0.16	1.28	1.05	0.36	82	83	69	2.82	2	72	0.042	101	102	262.8	-0.52	0.90	8.6	123.1	178.9	173.8	55.4	178.5	137	69	69	69	0.019	1.001	7.473	921
596	94.633	94.397		0.16	0.16	1.28	1.05	0.36	82	83	69	2.81	2	72	0.044	98	100	262.5	0.29	0.82	9.1	123.0	178.7	173.7	55.4	178.4	136	69	69	69	0.019	1.001	6.828	841
597	94.791	94.556		0.16	0.16	1.28	1.05	0.36	82	83	69	2.82	2	72	0.047	95	95	262.4	0.09	0.90	3.9	122.8	178.6	173.6	55.4	178.3	135	69	69	69	0.019	1.001	7.474	919
598	94.950	94.717		0.16	0.16	1.29	1.05	0.36	82	83	69	2.82	2	73	0.047	95	97	262.9	-0.46	0.88	9.4	122.7	178.5	173.4	55.4	178.1	133	69	69	69	0.018	1.001	7.312	898
599	95.108	94.878		0.16	0.16	1.28	1.05	0.36	82	83	69	2.80	2	72	0.043	99	101	262.4	0.47	0.82	8.4	122.6	178.4	173.6	55.4	178.0	135	69	69	69	0.018	1.001	6.823	838
600	95.268	95.038		0.16	0.16	1.29	1.05	0.36	82	83	69	2.82	2	72	0.043	100	100	262.7	-0.29	0.84	7.2	122.6	178.2	173.2	55.3	177.9	133	69	69	69	0.017	1.001	6.988	858
601	95.426	95.198		0.16	0.16	1.29	1.05	0.36	82	83	69	2.81	2	72	0.043	99	100	263.1	-0.45	0.84	9.1	122.4	178.2	173.1	55.3	177.7	133	69	69	69	0.017	1.001	6.989	857
602	95.585	95.359		0.16	0.16	1.28	1.05	0.36	82	83	69	2.81	2	72	0.044	98	100	263.3	-0.17	0.82	12.9	122.3	178.0	172.9	55.3	177.6	130	69	69	69	0.017	1.001	6.826	836
603	95.743	95.519		0.16	0.16	1.28	1.05	0.36	82	83	69	2.82	2	72	0.048	94	95	262.7	0.62	0.88	7.9	122.2	177.9	172.8	55.3	177.5	131	69	69	69	0.016	1.001	7.297	893
604	95.901	95.679		0.16	0.16	1.28	1.05	0.36	82	82	69	2.80	2	72	0.044	98	99	262.7	0.05	0.80	12.9	122.1	177.7	172.7	55.3	177.4	128	69	69	69	0.016	1.001	6.670	815
605	96.059	95.840		0.16	0.16	1.29	1.05	0.36	82	83	69	2.82	2	72	0.042	100	102	263.1	-0.40	0.84	9.1	122.0	177.7	172.6	55.4	177.3	126	69	69	69	0.016	1.001	7.002	855
606	96.218	96.000		0.16	0.16	1.28	1.05	0.36	82	83	69	2.81	2	72	0.047	95	96	262.2	0.84	0.80	9.8	121.8	177.5	172.6	55.4	177.2	128	69	69	69	0.015	1.001	6.657	812
607	96.377	96.160		0.16	0.16	1.28	1.05	0.36	82	83	69	2.80	2	72	0.043	100	100	262.6	-0.40	0.76	10.3	121.6	177.4	172.4	55.4	177.0	127	69	69	69	0.016	1.001	6.335	772
608	96.536	96.321		0.16	0.16	1.28	1.05	0.36	82	82	69	2.81	2	72	0.045	97	99	262.9	-0.24	0.82	10.8	121.5	177.3	172.4	55.4	176.9	127	69	69	69	0.016	1.001	6.848	833
609	96.695	96.481		0.16	0.16	1.29	1.05	0.36	82	82	69	2.81	2	72	0.043	100	100	262.3	0.54	0.80	10.4	121.4	177.1	172.2	55.4	176.8	125	69	69	69	0.015	1.001	6.662	810
610	96.853	96.641		0.16	0.16	1.27	1.05	0.36	82	82	69	2.80	2	72	0.042	100	102	263.4	-1.05	0.86	11.6	121.4	177.1	172.0	55.3	176.7	125	69	69	69	0.015	1.001	7.147	869

Elapsed Time	Particulate Sampling Data																Fuel Weight, lb		Flow, gpm		Temperature Data, oF												
	Gas Meter Cubic Feet (1)	Gas Meter Cubic Feet (2)	Gas Meter Cubic Feet (amb)	Sample Rate, cfm (1)	Sample Rate, cfm (2)	Orifice dH (1)	Orifice dH (2)	Orifice dH (amb)	Meter oF (1)	Meter oF (2)	Meter oF (amb)	Meter Vac. In. Hg. (1)	Meter Vac. In. Hg. (2)	Dilution Tunnel Temp.	Dilution Tunnel dP	Pro. Rate (%) (1)	Pro. Rate (%) (2)	Scale Reading	Weight Change	Load Side Liquid Flow Rate	Boiler Side Liquid Flow Rate (optional)	Thermopile ΔT	Boiler to Heat Exch. Temp.	Heat Exch to Boiler Temp.	Inlet Load Temp.	Outlet Load Temp.	Stack	Filter (1)	Filter (2)	Ambient		Specific Heat of Inlet Water (BTU/lb-°F)	Mass Flow Rate of Inlet Water (lb/min)	Heat Output, Btu
611	97.011	96.802		0.16	0.16	1.28	1.05	0.36	82	82	69	2.81	2	72	0.044	98	100	262.7	0.63	0.80	10.3	121.3	176.9	172.0	55.4	176.6	125	69	69	69	0.015	1.001	6.659	808
612	97.170	96.962		0.16	0.16	1.28	1.05	0.36	82	82	69	2.81	2	72	0.041	102	103	262.7	0.02	0.83	14.2	121.1	176.9	171.8	55.3	176.5	125	69	69	69	0.015	1.001	6.914	839
613	97.328	97.122		0.16	0.16	1.28	1.05	0.36	82	82	69	2.81	2	72	0.046	96	97	263.0	-0.34	0.80	9.1	120.9	176.6	171.6	55.4	176.3	123	69	69	69	0.015	1.001	6.662	807
614	97.487	97.283		0.16	0.16	1.28	1.05	0.36	82	82	69	2.81	2	72	0.045	97	99	263.2	-0.12	0.80	9.6	120.9	176.5	171.6	55.4	176.2	121	69	69	69	0.014	1.001	6.663	806
615	97.647	97.443		0.16	0.16	1.32	1.05	0.36	82	82	69	2.84	2	73	0.044	99	99	262.8	0.35	0.80	12.9	120.7	176.4	171.7	55.4	176.1	123	69	69	69	0.014	1.001	6.660	805
616	97.807	97.603		0.16	0.16	1.31	1.05	0.36	82	82	69	2.85	2	74	0.044	99	99	263.0	-0.16	0.88	8.9	120.6	176.3	171.3	55.4	176.0	121	69	69	69	0.014	1.001	7.308	882
617	97.968	97.764		0.16	0.16	1.32	1.05	0.36	82	82	69	2.86	2	75	0.045	99	99	262.7	0.24	0.88	11.6	120.2	176.1	171.3	55.6	175.8	120	69	69	69	0.014	1.001	7.306	880
618	98.128	97.924		0.16	0.16	1.31	1.04	0.36	82	82	69	2.86	2	82	0.044	100	100	262.4	0.32	0.86	13.1	120.0	175.9	171.1	55.6	175.6	126	69	69	69	0.019	1.001	7.140	858
619	98.289	98.083		0.16	0.16	1.31	1.04	0.36	82	82	69	2.86	2	78	0.046	98	97	262.5	-0.09	0.76	10.8	119.7	175.9	171.1	55.8	175.5	151	70	70	69	0.022	1.001	6.328	759
620	98.449	98.243		0.16	0.16	1.31	1.05	0.36	82	82	69	2.86	2	78	0.046	97	98	262.2	0.35	0.80	8.4	119.5	175.8	170.8	56.0	175.4	145	69	69	69	0.019	1.001	6.650	795
621	98.609	98.404		0.16	0.16	1.31	1.05	0.36	82	82	69	2.86	2	79	0.045	99	99	262.8	-0.64	0.82	9.6	119.2	175.7	170.7	56.2	175.3	141	70	69	69	0.018	1.001	6.811	812
622	98.769	98.564		0.16	0.16	1.31	1.04	0.36	82	82	69	2.84	2	80	0.042	102	102	262.3	0.50	0.80	14.1	118.9	175.5	170.6	56.4	175.2	138	70	69	69	0.016	1.001	6.648	791
623	98.929	98.724		0.16	0.16	1.31	1.05	0.36	82	82	70	2.85	2	80	0.043	101	101	262.8	-0.49	0.87	15.5	118.6	175.4	170.6	56.6	175.1	136	70	69	70	0.016	1.001	7.291	865
624	99.089	98.885		0.16	0.16	1.31	1.05	0.36	82	82	70	2.86	2	80	0.039	106	107	262.2	0.58	0.86	13.1	118.1	175.3	170.5	56.8	174.9	135	70	70	70	0.016	1.001	7.126	843
625	99.250	99.044		0.16	0.16	1.31	1.05	0.36	82	82	70	2.86	2	81	0.043	102	101	263.1	-0.92	0.82	10.4	118.1	175.2	170.6	56.8	174.9	131	70	70	70	0.016	1.001	6.805	805
626	99.410	99.204		0.16	0.16	1.31	1.05	0.36	82	82	71	2.86	2	81	0.044	100	100	262.3	0.87	0.84	11.1	118.0	175.1	170.4	56.8	174.8	129	70	70	71	0.015	1.001	6.964	822
627	99.570	99.365		0.16	0.16	1.31	1.05	0.36	82	82	71	2.86	2	81	0.043	101	102	262.6	-0.32	0.78	12.9	117.7	175.0	170.1	56.9	174.6	131	71	70	71	0.015	1.001	6.474	763
628	99.730	99.524		0.16	0.16	1.31	1.05	0.36	82	82	71	2.86	2	82	0.045	99	98	262.6	-0.05	0.80	11.7	117.5	174.7	170.0	57.0	174.5	130	71	70	71	0.014	1.001	6.637	781
629	99.890	99.684		0.16	0.16	1.31	1.05	0.36	82	82	71	2.86	2	82	0.046	98	98	262.6	0.00	0.85	12.0	117.1	174.7	169.9	57.2	174.3	127	71	70	71	0.014	1.001	7.119	834
630	100.051	99.845		0.16	0.16	1.31	1.05	0.36	82	82	71	2.85	2	82	0.043	102	102	263.1	-0.47	0.85	12.9	117.1	174.6	169.7	57.1	174.2	124	71	71	71	0.014	1.001	7.113	834
631	100.211	100.004		0.16	0.16	1.31	1.05	0.36	82	82	72	2.86	2	82	0.047	97	96	262.6	0.52	0.83	15.3	116.9	174.5	169.6	57.2	174.1	125	71	71	72	0.013	1.001	6.953	814
632	100.371	100.164		0.16	0.16	1.31	1.05	0.36	82	82	72	2.86	2	83	0.044	100	100	263.0	-0.41	0.84	15.5	116.7	174.3	169.5	57.2	174.0	126	72	71	72	0.013	1.001	6.986	816
633	100.531	100.324		0.16	0.16	1.31	1.04	0.36	82	83	72	2.86	2	83	0.045	99	99	262.9	0.10	0.84	15.5	116.7	174.2	169.4	57.1	173.8	124	72	71	72	0.013	1.001	6.992	817
634	100.692	100.483		0.16	0.16	1.31	1.05	0.36	82	83	72	2.85	2	83	0.046	98	97	262.4	0.45	0.86	15.4	116.6	174.1	169.3	57.2	173.8	123	72	71	72	0.013	1.001	7.150	835
635	100.852	100.644		0.16	0.16	1.31	1.05	0.36	82	83	71	2.85	2	85	0.044	100	101	262.6	-0.19	0.84	15.5	116.3	174.0	169.1	57.3	173.6	123	72	71	71	0.013	1.001	6.973	812
636	101.013	100.804		0.16	0.16	1.31	1.05	0.36	82	83	71	2.85	2	86	0.044	101	100	262.7	-0.04	0.78	13.2	116.0	173.8	169.1	57.5	173.5	123	72	71	71	0.012	1.001	6.477	752
637	101.173	100.964		0.16	0.16	1.31	1.05	0.36	82	83	71	2.86	2	86	0.045	99	99	262.7	-0.07	0.80	14.2	115.8	173.7	168.9	57.5	173.3	122	72	71	71	0.012	1.001	6.626	768
638	101.333	101.124		0.16	0.16	1.31	1.05	0.36	82	83	71	2.85	2	86	0.045	99	99	262.9	-0.17	0.81	14.2	115.6	173.5	168.8	57.6	173.2	122	72	71	71	0.011	1.001	6.725	778
639	101.494	101.284		0.16	0.16	1.30	1.04	0.36	82	83	72	2.85	2	86	0.046	99	98	262.1	0.81	0.80	14.3	115.6	173.4	168.7	57.5	173.1	121	72	71	72	0.011	1.001	6.680	773
640	101.654	101.444		0.16	0.16	1.31	1.05	0.36	82	83	72	2.86	2	86	0.046	98	98	262.8	-0.68	0.84	15.6	115.4	173.3	168.5	57.5	173.0	122	72	71	72	0.011	1.001	7.008	810
641	101.814	101.604		0.16	0.16	1.30	1.05	0.36	82	83	72	2.85	2	85	0.045	99	99	262.8	-0.06	0.85	15.5	115.3	173.1	168.4	57.5	172.9	121	72	72	72	0.011	1.001	7.110	821
642	101.974	101.764		0.16	0.16	1.30	1.05	0.36	82	83	73	2.86	2	85	0.045	99	99	263.0	-0.13	0.80	15.5	115.1	173.0	168.3	57.5	172.6	121	73	72	73	0.011	1.001	6.626	764
643	102.134	101.924		0.16	0.16	1.31	1.04	0.36	83	83	73	2.86	2	85	0.045	99	99	262.9	0.11	0.81	14.2	115.1	172.9	168.2	57.5	172.6	120	73	72	73	0.011	1.001	6.785	782
644	102.294	102.083		0.16	0.16	1.31	1.05	0.36	83	83	73	2.86	2	86	0.042	102	102	262.3	0.56	0.82	13.3	115.0	172.8	168.1	57.5	172.5	119	73	72	73	0.011	1.001	6.796	782
645	102.454	102.244		0.16	0.16	1.31	1.05	0.36	83	83	74	2.85	2	86	0.046	98	99	262.2	0.08	0.83	14.2	114.8	172.7	168.1	57.6	172.4	118	73	72	74	0.011	1.001	6.947	799
646	102.614	102.403		0.16	0.16	1.31	1.04	0.36	83	83	74	2.85	2	85	0.044	100	100	262.5	-0.32	0.76	14.2	114.7	172.5	167.9	57.5	172.2	117	73	72	74	0.011	1.001	6.301	724
647	102.774	102.562		0.16	0.16	1.31	1.04	0.36	83	83	74	2.86	2	86	0.042	102	102	262.3	0.23	0.81	15.5	114.5	172.4	167.7	57.6	172.1	118	73	73	74	0.011	1.001	6.783	778
648	102.934	102.723		0.16	0.16	1.30	1.04	0.36	83	83	74	2.87	2	87	0.043	101	102	262.4	-0.15	0.87	14.3	114.2	172.2	167.4	57.6	171.9	117	74	73	74	0.011	1.001	7.268	831
649	103.094	102.881		0.16	0.16	1.30	1.04	0.36	83	83	74	2.87	2	90	0.045	99	98	262.4	0.09	0.85	15.5	114.1	172.0	167.3	57.6	171.7	140	74	73	74	0.029	1.001	7.106	812
650	103.254	103.041		0.16	0.16	1.30	1.04	0.36	83	83	74	2.87	2	87	0.041	104	104	262.1	0.24	0.79	15.5	113.9	172.0	167.2	57.7	171.6	141	74	73	74	0.019	1.001	6.618	755
651	103.414	103.201		0.16	0.16	1.30	1.05	0.36	83	83	75	2.85	2	86	0.043	101	102	262.8	-0.71	0.83	14.3	113.7	171.9	167.2	57.9	171.6	138	74	73	75	0.017	1.001	6.941	790
652	103.574	103.360		0.16	0.16	1.31	1.04	0.36	83	83	75	2.87	2	86	0.043	101	101	262.6	0.26	0.79	15.5	113.7	171.8	167.1	57.7	171.4	136	74	73	75	0.016	1.001	6.618	753
653	103.734	103.520		0.16	0.16	1.30	1.04	0.36	83	84	75	2.86	2	87	0.043	101	101	261.8	0.77	0.79	15.5	113.7	171.6	166.9	57.6	171.3	134	75	74	75	0.016	1.001	6.618	753
654	103.894	103.680		0.16	0.16	1.30	1.04	0.36	83	84	75	2.85	2	86	0.045	99	99	262.4	-0.64	0.79	15.5	113.5	171.5	166.9	57.7	171.2	133	75	74	75	0.014	1.001	6.621	752
655	104.053	103.839		0.16	0.16	1.30	1.04	0.36	83	84	75	2.86	2	86	0.046	97	97	262.0	0.43	0.83	15.5	113.3	171.4	166.8	57.8	171.1	131	75	74	75	0.014	1.001	6.940	787
656	104.213	103.998		0.16	0.16	1.32	1.04	0.36	84	84	75	2.90	2	86	0.045	99	98	261.6	0.39	0.87	14.2	113.2	171.3	166.7	57.8	171.0	130	75	74	75	0.014	1.001	7.265	823
657	104.373	104.158		0.16	0.16	1.30	1.04	0.36	84	84	75	2.86	2	86	0.042	102	103	261.9	-0.29	0.85	15.5	113.0	171.1	166.5	57.9	170.8	127	75	74	75	0.014	1.001	7.102	803
658	104.533	104.317		0.16	0.16	1.30	1.04	0.36	84	84	76	2.86	2	87	0.043	101	101	262.2	-0.25	0.81	15.5	112.9	171.1	166.4	57.9	170.7	128	75	74	76	0.013	1.001	6.778	766
659	104.693	104.477		0.16	0.16	1.31	1.04	0.36	84	84	76	2.87	2	87	0.042	102	103	262.4	-0.23	0.81	15.4	112.7	170.9	166.2	57.9	170.5	127	75	74	76	0.013	1.001	6.779	765
660	104.853	104.637		0.16	0.16	1.31	1.04	0.36	84	84	76	2.87	2	87	0.045	99	99	262.4	0.01	0.77	14.4	112.6	170.8	166.1	57.9	170.5	125	76	75	76	0.013	1.001	6.449	727
661	105.013	104.796		0.16	0.16	1.31	1.04	0.36	84	84	76	2.86	2	87	0.043	101	101	261.6	0.75	0.87	15.6	112.4	170.6	166.1	57.9	170.3	127	76	75	76	0.013	1.001	7.266	817
662	105.173	104.955		0.16	0.16	1.31	1.04	0.36	84	84	76	2.86	2	87	0.042	102	102	261.9	-0.28	0.79	14.2	112.3	170.5	166.0	57.9	170.2	126	76	75	76	0.013	1.001	6.616	744
663	105.333	105.115		0.16	0.16	1.30	1.04	0.36	84	85	76	2.86	2	87	0.042	102	102	262.5	-0.60	0.81	15.5	112.1	170.3	165.8	57.9	170.0	123	76	75	76	0.013	1.001	6.775	760
664	105.494	105.274		0.16	0.16	1.30	1.04	0.36	84	85	76	2.86	2	88	0.047	97	96	262.8	-0.28	0.87	15.5	111.9	170.2	165.7	58.0	169.9	124	76	75	76	0.012	1.001	7.262	814
665	105.654	105.434		0.16	0.16	1.30	1.04	0.36	84	85	76	2.87	2	87	0.045	99	99	262.1	0.66	0.85	15.4	111.8	170.1	165.6	58.0	169.8	124	76	75	76	0.012	1.001	7.094	794
666	105.814	105.593		0.16	0.16	1.30	1.04	0.36	85	85	76	2.87	2	87	0.046	98	97	261.8	0.33	0.87	15.6	111.7	170.0	165.5	58.0	169.7	123	76	75	76	0.012	1.001	7.248	810
667	105.974	105.752		0.16	0.16	1.30	1.04	0.36	85	85	77	2.87	2	87	0.041	103	103	261.5	0.26	0.85	14.3	111.5	169.8	165.2	58.0	169.5	123	76	75	77	0.012	1.001	7.116	794
668	106.134	105.913		0.16	0.16	1.30	1.04	0.36	85	85	77	2.86	2	87	0.044	100	101	261.8	-0.29	0.81	15.6	111.4	169.7	165.1	58.0	169.4	121	77	76	77	0.012	1.001	6.783	757
669	106.294	106.071		0.16	0.16	1.30	1.04	0.36	85	85	77	2.87	2	88	0.042	102	101	262.8	-1.00	0.84	15.6	111.3	169.6	164.9	57.9	169.3	123	77	76	77	0.012	1.001	7.020	782
670	106.454	106.231		0.16	0.16	1.29	1.04	0.36	85	85	77	2.87	2	88	0.044	100	100	261.8	1.06	0.83	15.4	111.0	169.4	164.8	58.1	169.1	122	77	76	77	0.011	1.001	6.916	769
671	106.614	106.391		0.16	0.16	1.30	1.04	0.36	85	85	77	2.86	2	87	0.043	101	101	261.9	-0.11	0.87	15.5	111.1	169.3	164.8	58.0	169.1	122	77	76	77	0.011	1.001	7.251	807
672	106.774	106.550		0.16	0.16	1.30	1.04	0.36	85	85	77	2.87	2	87	0.039	106	106	261.7	0.15	0.89	15.5	110.9	169.2	164.7	58.0	168.9	122	77	76	77	0.011	1.001	7.421	824

Elapsed Time	Particulate Sampling Data																Fuel Weight, lb		Flow, gpm		Temperature Data, oF												
	Gas Meter Cubic Feet (1)	Gas Meter Cubic Feet (2)	Gas Meter Cubic Feet (amb)	Sample Rate, cfm (1)	Sample Rate, cfm (2)	Orifice dH (1)	Orifice dH (2)	Orifice dH (amb)	Meter oF (1)	Meter oF (2)	Meter oF (amb)	Meter Vac. In. Hg. (1)	Meter Vac. In. Hg. (2)	Dilution Tunnel Temp.	Dilution Tunnel dP	Pro. Rate (%) (1)	Pro. Rate (%) (2)	Scale Reading	Weight Change	Load Side Liquid Flow Rate	Boiler Side Liquid Flow Rate (optional)	Thermopile ΔT	Boiler to Heat Exch. Temp.	Heat Exch to Boiler Temp.	Inlet Load Temp.	Outlet Load Temp.	Stack	Filter (1)	Filter (2)	Ambient		Specific Heat of Inlet Water (BTU/lb-°F)	Mass Flow Rate of Inlet Water (lb/min)	Heat Output, Btu
673	106.934	106.709		0.16	0.16	1.30	1.04	0.36	85	86	77	2.86	2	88	0.044	100	99	262.5	-0.74	0.81	15.5	110.7	169.0	164.5	58.0	168.7	122	77	76	77	0.011	1.001	6.774	751
674	107.094	106.869		0.16	0.16	1.30	1.04	0.36	85	86	77	2.86	2	87	0.044	100	100	262.4	0.05	0.79	15.5	110.6	168.9	164.5	58.0	168.6	122	77	76	77	0.011	1.001	6.611	732
675	107.253	107.028		0.16	0.16	1.30	1.04	0.36	85	86	77	2.87	2	88	0.043	100	101	262.5	-0.03	0.85	15.5	110.5	168.8	164.3	58.0	168.5	119	77	76	77	0.011	1.001	7.095	785
676	107.414	107.187		0.16	0.16	1.30	1.04	0.36	86	86	77	2.88	2	88	0.044	100	99	262.9	-0.45	0.83	15.5	110.3	168.7	164.2	58.1	168.4	120	77	76	77	0.011	1.001	6.933	766
677	107.574	107.347		0.16	0.16	1.30	1.04	0.36	86	86	77	2.87	2	88	0.043	101	101	262.3	0.63	0.83	15.6	110.1	168.5	164.1	58.1	168.2	119	77	77	77	0.011	1.001	6.931	764
678	107.734	107.506		0.16	0.16	1.30	1.04	0.36	86	86	77	2.86	2	88	0.045	99	98	261.9	0.40	0.89	15.5	110.0	168.4	163.9	58.1	168.1	119	77	77	77	0.011	1.001	7.418	817
679	107.894	107.666		0.16	0.16	1.30	1.03	0.36	86	86	78	2.89	2	91	0.045	99	99	261.9	-0.05	0.85	15.5	109.6	168.2	163.8	58.3	167.9	119	78	77	78	0.010	1.001	7.096	779
680	108.054	107.825		0.16	0.16	1.31	1.04	0.36	86	86	78	2.88	2	90	0.046	98	97	261.6	0.34	0.83	15.5	109.7	168.1	163.7	58.1	167.8	151	78	77	78	0.031	1.001	6.929	761
681	108.215	107.984		0.16	0.16	1.30	1.04	0.36	86	86	78	2.88	2	88	0.042	103	102	261.6	-0.04	0.77	15.6	109.5	168.0	163.6	58.2	167.6	140	78	77	78	0.018	1.001	6.446	706
682	108.375	108.144		0.16	0.16	1.30	1.04	0.36	86	86	78	2.87	2	88	0.045	99	99	261.8	-0.21	0.79	15.5	109.4	167.9	163.5	58.3	167.6	137	78	77	78	0.017	1.001	6.608	724
683	108.535	108.303		0.16	0.16	1.30	1.04	0.36	86	86	78	2.87	2	88	0.042	102	102	261.8	0.02	0.83	15.5	109.2	167.8	163.4	58.3	167.5	135	78	77	78	0.016	1.001	6.931	758
684	108.695	108.462		0.16	0.16	1.29	1.04	0.36	86	87	78	2.88	2	89	0.045	99	98	261.8	-0.01	0.79	15.4	109.2	167.7	163.3	58.2	167.4	134	78	77	78	0.015	1.001	6.609	722
685	108.855	108.623		0.16	0.16	1.29	1.04	0.36	86	87	78	2.86	2	88	0.045	99	99	261.1	0.68	0.83	15.6	109.0	167.6	163.2	58.3	167.3	132	78	77	78	0.014	1.001	6.929	756
686	109.015	108.782		0.16	0.16	1.29	1.04	0.36	86	87	78	2.86	2	89	0.046	98	97	261.1	0.02	0.85	15.5	108.8	167.5	163.1	58.3	167.1	131	78	77	78	0.014	1.001	7.091	773
687	109.175	108.941		0.16	0.16	1.30	1.04	0.36	86	87	78	2.86	2	88	0.043	101	100	261.3	-0.20	0.85	15.5	108.7	167.2	162.8	58.3	166.9	130	78	77	78	0.013	1.001	7.094	772
688	109.335	109.101		0.16	0.16	1.30	1.04	0.36	87	87	78	2.87	2	88	0.043	101	101	260.9	0.43	0.79	15.5	108.6	167.2	162.8	58.3	166.9	130	78	77	78	0.013	1.001	6.605	718
689	109.495	109.260		0.16	0.16	1.30	1.04	0.36	87	87	78	2.87	2	90	0.044	100	99	261.7	-0.77	0.81	15.5	108.4	167.0	162.6	58.3	166.7	129	78	77	78	0.013	1.001	6.762	734
690	109.655	109.420		0.16	0.16	1.30	1.04	0.36	87	87	78	2.88	2	88	0.046	97	98	261.9	-0.21	0.77	15.5	108.7	166.8	162.4	57.8	166.6	126	78	78	78	0.012	1.001	6.444	701
691	109.815	109.580		0.16	0.16	1.30	1.04	0.36	87	87	78	2.86	2	87	0.043	101	101	261.9	-0.03	0.81	15.6	108.8	166.8	162.3	57.6	166.4	125	78	78	78	0.012	1.001	6.765	737
692	109.976	109.739		0.16	0.16	1.30	1.04	0.36	87	87	78	2.87	2	86	0.045	99	98	261.5	0.41	0.79	15.5	108.9	166.7	162.2	57.5	166.4	127	78	78	78	0.012	1.001	6.606	720
693	110.136	109.898		0.16	0.16	1.30	1.04	0.36	87	87	78	2.87	2	86	0.044	99	99	261.7	-0.21	0.77	15.5	108.8	166.5	162.1	57.4	166.2	126	78	78	78	0.012	1.001	6.446	702
694	110.296	110.059		0.16	0.16	1.30	1.04	0.36	87	87	78	2.88	2	86	0.044	99	100	261.2	0.50	0.81	15.5	108.7	166.4	162.0	57.4	166.1	124	78	78	78	0.012	1.001	6.770	737
695	110.457	110.218		0.16	0.16	1.30	1.04	0.36	87	88	78	2.87	2	85	0.042	102	101	261.5	-0.30	0.85	15.5	108.5	166.3	161.8	57.5	166.0	124	78	78	78	0.011	1.001	7.091	771
696	110.617	110.377		0.16	0.16	1.30	1.04	0.36	87	88	78	2.88	2	85	0.038	107	106	261.6	-0.12	0.77	15.5	108.4	166.1	161.7	57.4	165.8	123	78	78	78	0.012	1.001	6.439	699
697	110.778	110.538		0.16	0.16	1.30	1.04	0.36	87	88	78	2.86	2	85	0.042	102	102	261.2	0.44	0.83	15.5	108.5	166.0	161.5	57.2	165.7	123	78	78	78	0.012	1.001	6.944	754
698	110.938	110.697		0.16	0.16	1.30	1.04	0.36	87	88	78	2.87	2	84	0.042	102	101	261.4	-0.17	0.79	15.5	108.4	165.9	161.6	57.2	165.6	122	78	78	78	0.012	1.001	6.560	712
699	111.099	110.856		0.16	0.16	1.29	1.04	0.36	87	88	78	2.88	2	84	0.044	100	99	261.5	-0.11	0.80	15.5	108.4	165.8	161.5	57.1	165.5	122	78	78	78	0.012	1.001	6.704	727
700	111.259	111.017		0.16	0.16	1.30	1.04	0.36	87	88	78	2.88	2	84	0.046	97	98	261.9	-0.42	0.78	15.6	108.2	165.7	161.3	57.1	165.3	122	78	78	78	0.012	1.001	6.496	704
701	111.419	111.176		0.16	0.16	1.30	1.04	0.36	88	88	78	2.86	2	83	0.038	106	106	261.1	0.83	0.81	15.4	108.1	165.5	161.2	57.1	165.2	121	78	78	78	0.011	1.001	6.777	734
702	111.580	111.335		0.16	0.16	1.29	1.04	0.36	88	88	78	2.86	2	83	0.044	100	99	261.2	-0.19	0.81	15.5	108.0	165.4	160.9	57.0	165.0	119	78	78	78	0.011	1.001	6.781	733
703	111.740	111.496		0.16	0.16	1.29	1.04	0.36	88	88	78	2.87	2	83	0.043	100	101	261.6	-0.40	0.80	15.5	108.0	165.2	160.8	56.9	164.9	122	78	78	78	0.011	1.001	6.667	721
704	111.901	111.655		0.16	0.16	1.30	1.04	0.36	88	88	78	2.86	2	82	0.042	102	101	261.3	0.35	0.85	15.5	108.0	165.1	160.6	56.8	164.8	119	78	78	78	0.011	1.001	7.109	769
705	112.061	111.815		0.16	0.16	1.30	1.04	0.36	88	88	78	2.88	2	81	0.045	98	98	260.6	0.74	0.87	15.6	108.0	164.9	160.5	56.6	164.7	120	78	77	78	0.011	1.001	7.259	785
706	112.221	111.975		0.16	0.16	1.30	1.04	0.36	88	88	77	2.86	2	80	0.047	95	96	261.1	-0.56	0.76	15.5	108.1	164.8	160.2	56.4	164.5	121	78	77	77	0.012	1.001	6.305	682
707	112.382	112.135		0.16	0.16	1.30	1.04	0.36	88	88	77	2.86	2	80	0.042	102	101	261.5	-0.40	0.84	15.6	108.2	164.7	160.3	56.2	164.4	117	78	77	77	0.012	1.001	6.963	754
708	112.542	112.294		0.16	0.16	1.30	1.04	0.36	88	88	76	2.87	2	79	0.044	99	98	261.1	0.40	0.89	15.5	108.2	164.6	160.2	56.1	164.3	120	78	77	76	0.012	1.001	7.455	808
709	112.703	112.455		0.16	0.16	1.30	1.04	0.36	88	88	76	2.86	2	78	0.044	99	99	260.8	0.26	0.76	15.5	108.3	164.5	160.0	55.9	164.2	118	77	77	76	0.012	1.001	6.320	685
710	112.863	112.615		0.16	0.16	1.30	1.03	0.36	88	88	76	2.90	2	84	0.042	101	102	260.5	0.37	0.84	15.6	108.4	164.3	159.8	55.6	164.0	118	77	77	76	0.012	1.001	6.971	756
711	113.024	112.774		0.16	0.16	1.31	1.05	0.36	88	88	76	2.88	2	79	0.043	100	99	260.8	-0.37	0.82	15.6	108.4	164.1	159.7	55.5	163.8	146	77	77	76	0.031	1.001	6.809	739
712	113.184	112.935		0.16	0.16	1.31	1.05	0.36	88	88	75	2.86	2	77	0.043	100	100	260.7	0.09	0.82	15.5	108.4	164.0	159.5	55.3	163.7	136	77	77	75	0.018	1.001	6.811	739
713	113.345	113.094		0.16	0.16	1.31	1.05	0.36	88	88	75	2.86	2	76	0.044	99	98	260.7	0.06	0.89	15.6	108.5	163.9	159.5	55.2	163.6	134	77	77	75	0.017	1.001	7.460	810
714	113.506	113.254		0.16	0.16	1.31	1.05	0.36	88	88	75	2.87	2	76	0.045	98	97	260.5	0.16	0.80	15.4	108.5	163.8	159.3	55.0	163.5	132	76	77	75	0.017	1.001	6.652	722
715	113.667	113.416		0.16	0.16	1.31	1.05	0.36	88	88	75	2.87	2	75	0.044	99	100	260.1	0.42	0.80	15.5	108.4	163.6	159.2	54.9	163.4	131	76	76	75	0.016	1.001	6.655	722
716	113.828	113.575		0.16	0.16	1.31	1.05	0.36	88	88	74	2.87	2	75	0.043	100	99	261.2	-1.09	0.88	15.5	108.4	163.5	159.1	54.8	163.3	129	76	76	74	0.015	1.001	7.304	793
717	113.988	113.736		0.16	0.16	1.31	1.05	0.36	88	88	73	2.86	2	75	0.046	96	97	260.2	0.95	0.84	15.6	108.3	163.4	159.0	54.7	163.1	128	76	76	73	0.015	1.001	6.981	757
718	114.149	113.897		0.16	0.16	1.31	1.05	0.36	88	88	73	2.88	2	74	0.044	99	99	260.4	-0.12	0.84	15.6	108.3	163.2	158.8	54.7	162.9	126	75	76	73	0.015	1.001	6.977	756
719	114.310	114.057		0.16	0.16	1.31	1.05	0.36	88	88	73	2.86	2	74	0.046	97	96	260.7	-0.33	0.78	15.6	108.2	163.1	158.7	54.6	162.8	125	75	75	73	0.015	1.001	6.496	704
720	114.471	114.217		0.16	0.16	1.31	1.05	0.36	87	88	73	2.86	2	74	0.045	98	97	260.9	-0.21	0.86	15.5	108.1	163.0	158.5	54.6	162.7	124	75	75	73	0.014	1.001	7.144	773
721	114.632	114.378		0.16	0.16	1.31	1.05	0.36	87	88	73	2.87	2	74	0.045	98	98	260.7	0.16	0.80	15.5	108.0	162.8	158.3	54.5	162.5	124	74	75	73	0.014	1.001	6.663	721
722	114.794	114.539		0.16	0.16	1.31	1.05	0.36	87	88	73	2.87	2	73	0.045	98	98	260.4	0.30	0.90	15.5	107.9	162.6	158.2	54.5	162.3	124	74	75	73	0.014	1.001	7.471	807
723	114.955	114.699		0.16	0.16	1.31	1.05	0.36	87	88	72	2.85	2	73	0.045	98	97	260.5	-0.05	0.91	15.5	107.8	162.5	158.0	54.4	162.2	123	74	75	72	0.013	1.001	7.623	823
724	115.116	114.859		0.16	0.16	1.31	1.05	0.36	87	88	72	2.87	2	73	0.042	101	101	260.7	-0.23	0.82	15.5	107.8	162.4	157.9	54.4	162.2	121	74	74	72	0.013	1.001	6.824	737
725	115.277	115.020		0.16	0.16	1.32	1.05	0.36	87	88	72	2.86	2	73	0.046	97	97	260.2	0.54	0.88	15.4	107.6	162.3	157.8	54.3	162.0	121	73	74	72	0.013	1.001	7.301	787
726	115.438	115.181		0.16	0.16	1.31	1.05	0.36	87	88	72	2.86	2	73	0.043	100	100	260.9	-0.73	0.84	15.4	107.5	162.2	157.8	54.3	161.8	120	73	74	72	0.013	1.001	7.004	754
727	115.600	115.341		0.16	0.16	1.31	1.05	0.36	87	88	72	2.87	2	72	0.046	97	96	260.9	0.03	0.90	15.5	107.5	162.0	157.6	54.3	161.7	121	73	74	72	0.013	1.001	7.469	804
728	115.761	115.503		0.16	0.16	1.31	1.05	0.36	87	88	72	2.86	2	74	0.045	98	98	260.4	0.47	0.91	15.5	107.2	161.9	157.6	54.4	161.6	120	73	74	72	0.013	1.001	7.606	817
729	115.922	115.663		0.16	0.16	1.31	1.05	0.36	87	87	71	2.86	2	74	0.044	99	99	260.4	0.00	0.84	15.6	106.9	161.8	157.4	54.6	161.5	118	72	73	71	0.012	1.001	6.989	748
730	116.083	115.824		0.16	0.16	1.31	1.06	0.36	87	87	71	2.87	2	73	0.046	97	97	260.3	0.10	0.74	15.5	106.7	161.7	157.6	54.7	161.4	119	72	73	71	0.014	1.001	6.189	661
731	116.245	115.985		0.16	0.16	1.31	1.06	0.36	87	87	71	2.86	2	73	0.043	101	100	260.4	-0.06	0.74	15.5	106.6	161.6	157.6	54.8	161.3	119	72	73	71	0.013	1.001	6.176	659
732	116.406	116.146		0.16	0.16	1.31	1.05	0.36	87	87	71	2.86	2	73	0.043	100	100	260.1	0.32	0.82	15.5	106.2	161.5	157.2	54.9	161.2	117	72	73	71	0.013	1.001	6.816	725
733	116.567	116.306		0.16	0.16	1.32	1.06	0.36	86	87	71	2.87	2	73	0.044	99	98	261.4	-1.31	0.77	15.6	105.9	161.2	156.9	55.0	161.0	117	72	73	71	0.013	1.001	6.410	680
734	116.728	116.467		0.16	0.16	1.32	1.06	0.36	86	87	70	2.86	2	73	0.043	100	100	260.4	0.94	0.86	15.6	105.8	161.2	156.9	55.1	160.9	115	72	72	70	0.014	1.001	7.142	756

Elapsed Time	Particulate Sampling Data																Fuel Weight, lb		Flow, gpm		Temperature Data, oF												
	Gas Meter Cubic Feet (1)	Gas Meter Cubic Feet (2)	Gas Meter Cubic Feet (amb)	Sample Rate, cfm (1)	Sample Rate, cfm (2)	Orifice dH (1)	Orifice dH (2)	Orifice dH (amb)	Meter oF (1)	Meter oF (2)	Meter oF (amb)	Meter Vac. In. Hg. (1)	Meter Vac. In. Hg. (2)	Dilution Tunnel Temp.	Dilution Tunnel dP	Pro. Rate (%) (1)	Pro. Rate (%) (2)	Scale Reading	Weight Change	Load Side Liquid Flow Rate	Boiler Side Liquid Flow Rate (optional)	Thermopile ΔT	Boiler to Heat Exch. Temp.	Heat Exch to Boiler Temp.	Inlet Load Temp.	Outlet Load Temp.	Stack	Filter (1)	Filter (2)	Ambient		Specific Heat of Inlet Water (BTU/lb-°F)	Mass Flow Rate of Inlet Water (lb/min)	Heat Output, Btu
735	116.889	116.628		0.16	0.16	1.32	1.05	0.36	86	87	71	2.87	2	73	0.046	97	97	260.7	-0.32	0.86	15.5	105.6	161.0	156.7	55.2	160.8	115	71	72	71	0.012	1.001	7.139	755
736	117.051	116.788		0.16	0.16	1.32	1.05	0.36	86	87	71	2.86	2	73	0.041	103	102	260.6	0.16	0.88	15.5	105.5	160.9	156.6	55.2	160.6	117	71	72	71	0.012	1.001	7.302	771
737	117.212	116.949		0.16	0.16	1.32	1.05	0.36	86	87	71	2.87	2	73	0.044	99	99	260.9	-0.29	0.80	15.5	105.2	160.7	156.5	55.2	160.5	116	71	72	71	0.012	1.001	6.654	701
738	117.373	117.111		0.16	0.16	1.32	1.05	0.36	86	87	71	2.86	2	74	0.046	97	98	260.6	0.28	0.84	15.6	105.0	160.6	156.5	55.3	160.4	115	71	72	71	0.012	1.001	6.978	734
739	117.535	117.271		0.16	0.16	1.31	1.05	0.36	86	86	71	2.87	2	74	0.043	101	100	260.5	0.11	0.88	15.6	104.9	160.5	156.2	55.4	160.3	115	71	72	71	0.012	1.001	7.305	767
740	117.696	117.431		0.16	0.16	1.31	1.05	0.36	86	86	71	2.86	2	73	0.049	94	93	260.2	0.26	0.82	15.5	104.7	160.4	156.2	55.4	160.1	114	71	72	71	0.012	1.001	6.824	715
741	117.857	117.592		0.16	0.16	1.31	1.05	0.36	86	86	71	2.89	2	80	0.042	102	102	260.5	-0.23	0.84	15.6	104.6	160.3	156.1	55.4	160.0	115	71	72	71	0.012	1.001	6.982	731
742	118.018	117.753		0.16	0.16	1.32	1.05	0.36	86	86	71	2.85	2	75	0.045	98	98	260.2	0.31	0.82	15.6	104.4	160.0	155.9	55.4	159.8	139	72	72	71	0.029	1.001	6.818	713
743	118.179	117.913		0.16	0.16	1.31	1.05	0.36	86	86	71	2.87	2	74	0.045	98	98	260.4	-0.27	0.86	15.6	104.2	160.0	155.8	55.5	159.7	132	71	71	71	0.018	1.001	7.141	745
744	118.341	118.074		0.16	0.16	1.32	1.05	0.36	86	86	71	2.86	2	74	0.041	103	103	259.9	0.50	0.78	15.5	104.0	159.9	156.0	55.6	159.6	130	71	71	71	0.018	1.001	6.493	676
745	118.502	118.235		0.16	0.16	1.31	1.05	0.36	85	86	71	2.87	2	74	0.044	99	99	260.7	-0.75	0.78	15.5	104.0	159.8	155.7	55.5	159.5	128	71	71	71	0.017	1.001	6.491	676
746	118.663	118.395		0.16	0.16	1.31	1.04	0.36	85	86	71	2.88	2	84	0.043	101	101	258.6	2.07	0.78	15.5	103.7	159.5	155.5	55.5	159.3	125	71	71	71	0.017	1.001	6.487	674
747	118.823	118.555		0.16	0.16	1.31	1.05	0.36	85	86	71	2.89	2	87	0.041	103	104	257.4	1.17	0.74	15.5	103.7	159.7	155.7	55.6	159.3	139	72	72	71	0.032	1.001	6.170	641
748	118.984	118.715		0.16	0.16	1.32	1.05	0.36	85	86	71	2.89	2	89	0.040	106	105	256.0	1.45	0.86	15.5	103.9	159.8	155.7	55.6	159.4	170	72	72	71	0.034	1.001	7.142	743
749	119.144	118.875		0.16	0.16	1.32	1.05	0.36	85	86	70	2.87	2	93	0.043	102	102	254.6	1.40	0.88	15.5	104.3	160.4	156.2	55.6	159.9	188	72	72	70	0.037	1.001	7.300	762
750	119.305	119.034		0.16	0.16	1.32	1.05	0.36	85	86	71	2.90	2	97	0.042	104	103	253.6	0.99	0.88	15.5	105.2	161.6	157.1	55.7	160.8	211	72	72	71	0.038	1.001	7.308	770
751	119.466	119.195		0.16	0.16	1.33	1.05	0.36	85	85	71	2.88	2	101	0.041	105	106	251.9	1.74	0.80	15.5	105.9	162.2	157.8	55.8	161.7	232	73	72	71	0.041	1.001	6.653	706
752	119.626	119.354		0.16	0.16	1.32	1.05	0.36	85	85	71	2.90	2	104	0.039	108	107	250.1	1.75	0.72	15.4	106.8	163.1	158.6	55.7	162.4	246	73	73	71	0.040	1.001	6.005	642
753	119.785	119.513		0.16	0.16	1.32	1.04	0.36	85	85	71	2.90	2	106	0.043	102	102	249.9	0.21	0.72	15.5	107.7	164.0	159.7	55.7	163.4	255	74	73	71	0.048	1.001	6.006	648
754	119.946	119.672		0.16	0.16	1.32	1.04	0.36	85	85	71	2.91	2	109	0.044	102	101	247.1	2.76	0.82	15.5	108.8	165.1	160.5	55.7	164.5	263	74	74	71	0.046	1.001	6.821	743
755	120.105	119.830		0.16	0.16	1.32	1.04	0.36	85	85	71	2.91	2	110	0.039	108	107	246.5	0.63	0.78	15.6	109.8	166.2	161.6	55.7	165.5	270	75	75	71	0.052	1.001	6.491	714
756	120.265	119.989		0.16	0.16	1.31	1.04	0.36	85	85	71	2.92	2	112	0.045	101	101	245.0	1.50	0.76	15.5	110.9	167.3	162.7	55.7	166.6	275	76	75	71	0.051	1.001	6.334	703
757	120.425	120.147		0.16	0.16	1.30	1.03	0.36	85	85	70	2.92	2	113	0.039	109	107	243.3	1.72	0.82	15.5	112.1	168.5	164.0	55.7	167.8	279	77	76	70	0.050	1.001	6.821	766
758	120.585	120.305		0.16	0.16	1.30	1.02	0.36	85	85	71	2.92	2	114	0.043	103	102	241.4	1.92	0.76	15.5	113.2	169.7	165.0	55.8	168.9	283	77	76	71	0.054	1.001	6.306	715
759	120.744	120.463		0.16	0.16	1.30	1.02	0.36	85	85	70	2.95	2	115	0.039	108	108	241.1	0.28	0.84	15.5	114.4	170.9	166.0	55.7	170.1	286	78	77	70	0.054	1.001	6.973	799
760	120.903	120.619		0.16	0.16	1.29	1.02	0.36	85	85	70	2.95	2	116	0.043	103	101	238.8	2.24	0.82	15.4	115.7	172.2	167.4	55.7	171.5	290	79	77	70	0.055	1.001	6.819	790
761	121.062	120.777		0.16	0.16	1.29	1.02	0.36	85	85	70	2.96	2	116	0.039	108	108	237.4	1.46	0.78	15.5	117.0	173.4	168.5	55.7	172.7	294	79	78	70	0.048	1.001	6.533	765
762	121.220	120.933		0.16	0.16	1.29	1.01	0.36	84	85	70	2.96	2	116	0.043	103	101	236.7	0.68	0.84	14.2	118.3	174.7	169.8	55.7	174.0	295	80	79	70	0.050	1.001	6.973	826
763	121.378	121.090		0.16	0.16	1.29	1.01	0.36	84	85	70	2.98	2	117	0.043	103	102	233.6	3.15	0.84	15.5	119.5	175.9	171.0	55.8	175.2	295	80	79	70	0.048	1.001	6.973	834
764	121.537	121.245		0.16	0.16	1.29	1.01	0.36	84	85	70	2.97	2	117	0.039	108	106	232.5	1.05	0.82	14.2	120.8	177.3	172.2	55.8	176.6	298	81	79	70	0.054	1.001	6.812	824
765	121.695	121.402		0.16	0.16	1.29	1.00	0.36	84	85	70	2.98	2	118	0.045	100	100	231.0	1.48	0.91	11.1	122.1	178.5	173.4	55.7	177.8	298	81	80	70	0.053	1.001	7.625	932
766	121.854	121.557		0.16	0.16	1.28	1.00	0.36	84	85	70	3.00	2	119	0.044	102	100	229.6	1.40	0.80	11.6	123.4	179.9	174.7	55.7	179.2	300	81	80	70	0.054	1.001	6.651	822
767	122.011	121.713		0.16	0.16	1.28	0.99	0.36	84	85	70	3.01	2	119	0.040	106	105	227.8	1.77	0.84	10.4	124.7	181.1	176.0	55.8	180.5	302	82	80	70	0.057	1.001	6.977	871
768	122.169	121.866		0.16	0.15	1.28	0.96	0.36	84	85	70	2.98	2	105	0.044	100	97	228.0	-0.15	0.84	6.1	125.5	181.8	176.6	55.7	181.2	305	82	81	70	0.056	1.001	6.975	876
769	122.327	122.018		0.16	0.15	1.28	0.95	0.36	84	85	70	2.99	2	92	0.043	100	97	227.6	0.39	0.84	5.2	126.1	182.2	177.1	55.7	181.8	289	81	80	70	0.042	1.001	6.977	881
770	122.485	122.172		0.16	0.15	1.28	0.96	0.36	84	85	70	2.98	2	88	0.042	101	99	227.4	0.22	0.80	3.0	126.4	182.6	177.4	55.7	182.2	258	79	78	70	0.041	1.001	6.650	842
771	122.643	122.324		0.16	0.15	1.28	0.96	0.36	84	85	70	2.98	2	85	0.046	96	93	227.3	0.12	0.84	10.3	126.7	182.9	177.7	55.7	182.4	242	78	78	70	0.038	1.001	6.976	885
772	122.802	122.478		0.16	0.15	1.28	0.96	0.36	84	85	70	2.98	2	84	0.044	99	96	226.5	0.73	0.82	6.3	127.0	183.2	178.0	55.7	182.7	231	77	77	70	0.037	1.001	6.815	867
773	122.961	122.630		0.16	0.15	1.28	0.96	0.36	84	84	70	2.96	2	80	0.046	97	93	226.3	0.20	0.80	7.6	127.2	183.4	178.2	55.7	182.9	224	76	76	70	0.035	1.001	6.653	847
774	123.120	122.784		0.16	0.15	1.28	0.96	0.36	84	84	70	2.97	2	79	0.045	98	95	226.2	0.12	0.84	7.8	127.4	183.6	178.3	55.7	183.1	219	75	75	70	0.037	1.001	6.974	890
775	123.278	122.939		0.16	0.15	1.28	0.97	0.36	84	84	70	2.96	2	78	0.044	98	96	225.5	0.73	0.80	3.1	127.5	183.7	178.4	55.7	183.2	214	75	74	70	0.036	1.001	6.654	849
776	123.436	123.091		0.16	0.15	1.28	0.97	0.36	84	84	70	2.97	2	78	0.044	98	94	225.8	-0.36	0.80	6.4	127.6	183.8	178.5	55.8	183.3	210	75	73	70	0.035	1.001	6.655	850
777	123.594	123.246		0.16	0.16	1.27	0.97	0.36	84	84	70	3.00	2	78	0.048	94	92	225.7	0.18	0.90	6.7	127.7	183.8	178.7	55.7	183.4	207	74	73	70	0.035	1.001	7.463	954
778	123.752	123.400		0.16	0.15	1.27	0.97	0.36	84	84	70	3.00	2	76	0.042	100	98	225.0	0.68	0.86	3.7	127.8	183.9	178.7	55.7	183.5	204	74	72	70	0.035	1.001	7.141	914
779	123.911	123.555		0.16	0.16	1.28	0.97	0.36	84	84	70	2.99	2	75	0.042	101	98	225.2	-0.23	0.82	5.2	127.8	184.0	178.7	55.7	183.6	202	73	72	70	0.033	1.001	6.815	872
780	124.070	123.709		0.16	0.15	1.27	0.98	0.36	84	84	70	2.98	2	75	0.042	101	98	225.0	0.18	0.82	1.8	127.9	184.1	178.8	55.7	183.6	201	72	72	70	0.034	1.001	6.815	872
781	124.228	123.864		0.16	0.16	1.28	0.98	0.36	84	84	70	2.97	2	75	0.043	99	97	224.6	0.41	0.86	2.1	127.8	184.0	178.7	55.7	183.6	200	72	71	70	0.036	1.001	7.145	914
782	124.387	124.019		0.16	0.16	1.28	0.99	0.36	84	84	70	2.95	2	75	0.047	95	93	225.1	-0.44	0.88	3.4	127.9	184.1	178.9	55.8	183.7	198	71	70	70	0.036	1.001	7.302	935
783	124.545	124.175		0.16	0.16	1.29	0.99	0.36	84	84	70	2.96	2	75	0.043	99	98	225.4	-0.29	0.86	4.7	127.8	184.0	178.8	55.8	183.6	196	71	70	70	0.037	1.001	7.139	914
784	124.704	124.331		0.16	0.16	1.29	1.00	0.36	84	84	70	2.94	2	75	0.046	96	95	225.1	0.29	0.82	5.2	127.9	184.1	178.8	55.8	183.7	194	70	70	70	0.037	1.001	6.813	872
785	124.863	124.488		0.16	0.16	1.29	1.01	0.36	84	84	70	2.95	2	75	0.042	101	100	225.1	-0.03	0.86	5.6	127.9	184.1	178.7	55.8	183.6	192	70	70	70	0.036	1.001	7.134	913
786	125.022	124.646		0.16	0.16	1.29	1.02	0.36	84	84	70	2.93	2	75	0.048	94	94	225.2	-0.13	0.84	5.2	127.9	184.1	178.9	55.7	183.7	189	70	70	70	0.036	1.001	6.968	893
787	125.181	124.805		0.16	0.16	1.29	1.03	0.36	84	84	70	2.94	2	75	0.042	101	101	225.5	-0.27	0.86	4.4	127.8	184.0	178.8	55.7	183.6	188	70	70	70	0.036	1.001	7.132	913
788	125.341	124.962		0.16	0.16	1.30	1.05	0.36	84	84	70	2.94	2	75	0.044	99	97	225.0	0.49	0.80	4.1	127.9	184.0	178.8	55.7	183.6	185	70	70	70	0.035	1.001	6.673	855
789	125.502	125.123		0.16	0.16	1.31	1.05	0.36	83	84	70	2.92	2	75	0.045	99	99	225.4	-0.43	0.84	6.0	127.8	183.9	178.7	55.7	183.5	183	70	70	70	0.035	1.001	6.966	891
790	125.663	125.283		0.16	0.16	1.31	1.05	0.36	83	84	70	2.93	2	75	0.045	99	98	225.5	-0.05	0.86	2.3	127.8	183.9	178.8	55.7	183.5	181	70	70	70	0.034	1.001	7.137	913
791	125.823	125.443		0.16	0.16	1.32	1.05	0.36	83	84	70	2.91	2	75	0.042	101	102	225.1	0.42	0.78	3.9	127.7	183.8	178.8	55.7	183.4	180	70	70	70	0.034	1.001	6.514	833
792	125.984	125.603		0.16	0.16	1.32	1.05	0.36	83	84	70	2.90	2	75	0.040	105	104	224.8	0.23	0.82	3.9	127.8	183.7	178.6	55.7	183.4	178	70	70	70	0.033	1.001	6.821	872
793	126.145	125.764		0.16	0.16	1.32	1.05	0.36	83	84	70	2.91	2	75	0.046	98	98	225.3	-0.45	0.83	2.7	127.7	183.8	178.7	55.7	183.4	175	70	70	70	0.032	1.001	6.950	888
794	126.306	125.924		0.16	0.16	1.32	1.05	0.36	83	84	70	2.90	2	75	0.043	101	100	225.0	0.33	0.77	3.9	127.6	183.7	178.6	55.7	183.3	174	70	70	70	0.032	1.001	6.420	820
795	126.468	126.084		0.16	0.16	1.32	1.05	0.36	83	84	70	2.89	2	75	0.043	101	100	224.9	0.08	0.84	4.5	127.6	183.7	178.5	55.7	183.3	173	70	70	70	0.032	1.001	6.987	893
796	126.629	126.246		0.16	0.16	1.32	1.05	0.36	83	84	70	2.89	2	75	0.044	100	100	224.9	0.00	0.83	3.9	127.6	183.6	178.5	55.7	183.3	172	70	70	70	0.031	1.001	6.895	881

Elapsed Time	Particulate Sampling Data																Fuel Weight, lb		Flow, gpm		Temperature Data, oF												
	Gas Meter Cubic Feet (1)	Gas Meter Cubic Feet (2)	Gas Meter Cubic Feet (amb)	Sample Rate, cfm (1)	Sample Rate, cfm (2)	Orifice dH (1)	Orifice dH (2)	Orifice dH (amb)	Meter oF (1)	Meter oF (2)	Meter oF (amb)	Meter Vac. In. Hg. (1)	Meter Vac. In. Hg. (2)	Dilution Tunnel Temp.	Dilution Tunnel dP	Pro. Rate (%) (1)	Pro. Rate (%) (2)	Scale Reading	Weight Change	Load Side Liquid Flow Rate	Boiler Side Liquid Flow Rate (optional)	Thermopile ΔT	Boiler to Heat Exch. Temp.	Heat Exch to Boiler Temp.	Inlet Load Temp.	Outlet Load Temp.	Stack	Filter (1)	Filter (2)	Ambient		Specific Heat of Inlet Water (BTU/lb-°F)	Mass Flow Rate of Inlet Water (lb/min)	Heat Output, Btu
797	126.790	126.405		0.16	0.16	1.32	1.05	0.36	83	84	70	2.89	2	75	0.041	103	102	224.5	0.35	0.80	5.2	127.6	183.6	178.5	55.7	183.3	171	70	70	70	0.030	1.001	6.683	854
798	126.952	126.566		0.16	0.16	1.33	1.05	0.36	83	84	70	2.89	2	75	0.044	100	100	225.4	-0.83	0.80	3.6	127.3	183.5	178.4	55.8	183.1	169	70	70	70	0.030	1.001	6.652	848
799	127.113	126.727		0.16	0.16	1.33	1.05	0.36	83	84	70	2.88	2	75	0.044	100	100	225.2	0.20	0.80	4.5	127.4	183.5	178.4	55.7	183.1	166	70	70	70	0.029	1.001	6.653	848
800	127.275	126.887		0.16	0.16	1.33	1.05	0.36	83	84	70	2.88	2	75	0.043	101	100	225.5	-0.38	0.80	5.2	127.3	183.4	178.3	55.7	183.0	165	70	70	70	0.030	1.001	6.656	849
801	127.436	127.047		0.16	0.16	1.33	1.05	0.36	83	84	70	2.89	2	75	0.047	96	96	224.5	1.07	0.82	5.7	127.3	183.4	178.3	55.7	183.0	164	70	70	70	0.029	1.001	6.818	869
802	127.598	127.208		0.16	0.16	1.32	1.05	0.36	83	84	70	2.88	2	75	0.043	101	101	224.0	0.46	0.78	6.2	127.2	183.3	178.2	55.8	182.9	165	70	70	70	0.029	1.001	6.493	827
803	127.759	127.368		0.16	0.16	1.33	1.05	0.36	83	84	70	2.88	2	75	0.045	99	98	225.2	-1.15	0.86	6.5	127.1	183.3	178.1	55.8	182.9	163	70	70	70	0.029	1.001	7.139	909
804	127.921	127.528		0.16	0.16	1.33	1.05	0.36	83	84	70	2.88	2	74	0.045	99	98	225.3	-0.13	0.84	4.5	127.0	183.1	177.9	55.8	182.7	161	70	70	70	0.028	1.001	6.978	887
805	128.082	127.689		0.16	0.16	1.33	1.05	0.36	83	83	70	2.87	2	75	0.044	100	100	224.4	0.91	0.80	6.4	126.9	183.1	178.0	55.8	182.7	161	70	70	70	0.028	1.001	6.652	845
806	128.244	127.850		0.16	0.16	1.33	1.05	0.36	83	84	70	2.88	2	74	0.043	101	101	225.0	-0.65	0.84	9.4	126.9	183.1	177.9	55.8	182.7	163	70	70	70	0.027	1.001	6.979	887
807	128.405	128.009		0.16	0.16	1.33	1.05	0.36	83	84	70	2.88	2	75	0.046	98	96	224.5	0.54	0.82	5.2	126.8	183.0	177.9	55.8	182.6	160	70	70	70	0.027	1.001	6.819	866
808	128.567	128.170		0.16	0.16	1.32	1.05	0.36	83	83	70	2.87	2	74	0.042	103	102	225.0	-0.46	0.82	5.6	126.7	183.0	177.9	55.9	182.6	161	70	70	70	0.027	1.001	6.821	865
809	128.728	128.331		0.16	0.16	1.33	1.05	0.36	83	83	70	2.88	2	74	0.046	97	98	224.6	0.32	0.80	3.9	126.7	182.9	177.7	55.8	182.5	157	70	70	70	0.026	1.001	6.652	844
810	128.890	128.491		0.16	0.16	1.33	1.05	0.36	83	83	70	2.88	2	74	0.044	100	99	224.7	-0.09	0.86	6.5	126.7	182.8	177.6	55.8	182.4	158	70	70	70	0.027	1.001	7.137	905
811	129.051	128.651		0.16	0.16	1.33	1.05	0.36	83	83	70	2.88	2	74	0.044	100	99	225.2	-0.48	0.74	5.3	126.5	182.7	177.7	55.8	182.3	158	70	70	70	0.026	1.001	6.166	781
812	129.213	128.812		0.16	0.16	1.33	1.05	0.36	83	83	70	2.89	2	74	0.044	100	100	224.8	0.41	0.80	4.8	126.5	182.7	177.5	55.8	182.3	155	70	70	70	0.025	1.001	6.655	843
813	129.374	128.972		0.16	0.16	1.33	1.05	0.36	83	83	70	2.88	2	74	0.044	100	99	225.0	-0.23	0.86	9.1	126.2	182.5	177.3	55.9	182.1	154	70	70	70	0.025	1.001	7.145	903
814	129.536	129.132		0.16	0.16	1.32	1.05	0.36	83	83	70	2.89	2	74	0.044	100	99	225.0	0.01	0.82	9.0	126.2	182.4	177.2	55.8	182.1	154	70	70	70	0.025	1.001	6.812	861
815	129.697	129.293		0.16	0.16	1.32	1.04	0.36	83	83	70	2.89	2	74	0.041	103	103	224.7	0.30	0.76	4.5	126.2	182.4	177.3	55.8	182.0	155	70	70	70	0.025	1.001	6.331	800
816	129.859	129.453		0.16	0.16	1.33	1.05	0.36	83	83	70	2.88	2	74	0.046	98	97	225.4	-0.70	0.82	4.9	126.1	182.3	177.4	55.8	181.9	153	70	70	70	0.025	1.001	6.822	861
817	130.020	129.613		0.16	0.16	1.33	1.05	0.36	83	83	70	2.87	2	74	0.047	96	96	224.5	0.93	0.84	7.8	126.0	182.3	177.2	55.9	181.9	151	70	70	70	0.025	1.001	6.963	879
818	130.182	129.774		0.16	0.16	1.33	1.05	0.36	83	83	70	2.88	2	74	0.045	99	99	224.7	-0.23	0.84	8.4	125.9	182.1	177.0	55.9	181.7	154	70	70	70	0.024	1.001	6.978	879
819	130.343	129.935		0.16	0.16	1.33	1.05	0.36	83	83	70	2.89	2	74	0.044	100	100	224.6	0.07	0.74	6.0	125.8	182.1	177.1	55.8	181.7	153	70	70	70	0.024	1.001	6.203	781
820	130.505	130.094		0.16	0.16	1.32	1.05	0.36	83	83	70	2.89	2	74	0.044	100	99	225.0	-0.34	0.86	3.5	125.8	182.0	177.0	55.8	181.6	149	70	70	70	0.024	1.001	7.137	899
821	130.666	130.255		0.16	0.16	1.32	1.05	0.36	83	83	70	2.89	2	74	0.046	97	98	224.1	0.85	0.81	10.3	125.7	181.9	176.9	55.8	181.5	151	70	70	70	0.024	1.001	6.738	848
822	130.828	130.416		0.16	0.16	1.32	1.05	0.36	83	83	70	2.89	2	74	0.045	99	99	224.3	-0.19	0.82	5.2	125.6	181.8	176.7	55.8	181.4	151	70	70	70	0.024	1.001	6.816	857
823	130.989	130.576		0.16	0.16	1.33	1.05	0.36	83	83	70	2.89	2	74	0.046	97	97	224.7	-0.33	0.82	11.5	125.5	181.6	176.6	55.8	181.3	148	70	70	70	0.023	1.001	6.816	856
824	131.151	130.736		0.16	0.16	1.33	1.05	0.36	83	83	70	2.87	2	74	0.043	101	100	224.5	0.12	0.78	9.5	125.4	181.6	176.6	55.8	181.2	146	70	70	70	0.024	1.001	6.489	815
825	131.312	130.897		0.16	0.16	1.32	1.05	0.36	83	83	70	2.87	2	74	0.045	99	99	224.6	-0.09	0.82	7.7	125.2	181.5	176.4	55.8	181.1	151	70	70	70	0.023	1.001	6.816	855
826	131.473	131.057		0.16	0.16	1.33	1.05	0.36	83	83	70	2.88	2	74	0.048	95	95	224.7	-0.09	0.80	7.8	125.1	181.4	176.3	55.9	181.0	150	70	70	70	0.022	1.001	6.656	834
827	131.635	131.217		0.16	0.16	1.33	1.05	0.36	83	83	70	2.89	2	74	0.044	100	99	224.8	-0.10	0.78	5.8	125.0	181.3	176.2	55.9	180.9	150	70	70	70	0.022	1.001	6.529	817
828	131.796	131.378		0.16	0.16	1.32	1.05	0.36	83	83	70	2.89	2	74	0.044	100	100	224.8	0.03	0.78	11.6	125.0	181.2	176.2	55.9	180.9	147	70	70	70	0.022	1.001	6.491	812
829	131.958	131.538		0.16	0.16	1.32	1.05	0.36	83	83	70	2.89	2	74	0.044	100	99	224.9	-0.17	0.82	7.2	124.7	181.0	176.0	55.9	180.6	147	70	70	70	0.022	1.001	6.818	852
830	132.119	131.698		0.16	0.16	1.33	1.05	0.36	83	83	70	2.87	2	74	0.046	97	97	225.7	-0.73	0.78	7.7	124.8	181.0	176.0	55.9	180.7	146	70	70	70	0.022	1.001	6.494	811
831	132.281	131.859		0.16	0.16	1.33	1.05	0.36	83	83	70	2.88	2	74	0.046	98	98	224.7	1.02	0.80	7.8	124.6	180.9	175.9	55.9	180.5	147	70	70	70	0.022	1.001	6.651	830
832	132.442	132.019		0.16	0.16	1.33	1.05	0.36	83	83	70	2.88	2	74	0.043	101	100	224.0	0.62	0.84	7.8	124.6	180.8	175.8	55.9	180.5	144	70	70	70	0.021	1.001	6.977	870
833	132.604	132.179		0.16	0.16	1.32	1.05	0.36	83	83	70	2.89	2	74	0.046	98	97	224.5	-0.49	0.82	8.1	124.4	180.6	175.6	55.9	180.3	146	70	70	70	0.021	1.001	6.817	849
834	132.765	132.340		0.16	0.16	1.32	1.05	0.36	83	83	70	2.88	2	74	0.042	102	102	225.2	-0.69	0.84	10.2	124.3	180.6	175.6	55.9	180.2	145	70	70	70	0.021	1.001	6.980	869
835	132.927	132.500		0.16	0.16	1.32	1.04	0.36	83	83	70	2.89	2	74	0.047	97	96	225.1	0.10	0.80	11.2	124.2	180.4	175.5	55.9	180.1	143	70	70	70	0.021	1.001	6.656	828
836	133.088	132.660		0.16	0.16	1.32	1.05	0.36	83	83	70	2.88	2	74	0.043	101	100	224.9	0.21	0.80	10.4	124.1	180.4	175.3	55.9	180.0	142	70	70	70	0.020	1.001	6.652	827
837	133.250	132.820		0.16	0.16	1.32	1.05	0.36	83	83	70	2.89	2	74	0.044	100	99	223.9	1.01	0.78	10.4	124.0	180.3	175.2	55.9	179.9	141	70	70	70	0.020	1.001	6.490	806
838	133.411	132.981		0.16	0.16	1.32	1.04	0.36	83	83	70	2.89	2	74	0.041	103	103	224.0	-0.11	0.78	5.8	123.8	180.0	175.1	55.9	179.7	144	70	70	70	0.020	1.001	6.493	805
839	133.572	133.140		0.16	0.16	1.32	1.04	0.36	83	83	70	2.91	2	79	0.045	99	98	224.1	-0.10	0.82	9.7	123.5	179.8	175.0	56.0	179.5	152	70	70	70	0.031	1.001	6.817	843
840	133.733	133.300		0.16	0.16	1.33	1.05	0.36	83	83	70	2.89	2	74	0.043	101	100	223.2	0.86	0.74	7.8	123.7	180.0	175.0	55.9	179.5	153	72	71	70	0.028	1.001	6.169	764
841	133.894	133.460		0.16	0.16	1.33	1.05	0.36	83	83	70	2.89	2	74	0.044	100	99	223.4	-0.19	0.86	10.8	123.6	179.9	174.9	55.9	179.5	150	70	70	70	0.025	1.001	7.143	884
842	134.056	133.620		0.16	0.16	1.32	1.05	0.36	83	83	70	2.87	2	74	0.044	100	99	224.1	-0.62	0.80	9.1	123.5	179.8	174.9	55.9	179.4	148	70	70	70	0.024	1.001	6.656	823
843	134.217	133.781		0.16	0.16	1.33	1.05	0.36	83	83	70	2.88	2	74	0.042	102	102	224.2	-0.17	0.82	8.4	123.4	179.7	174.8	55.9	179.3	146	70	70	70	0.023	1.001	6.820	843
844	134.379	133.942		0.16	0.16	1.33	1.05	0.36	83	83	70	2.87	2	74	0.043	101	101	224.1	0.13	0.82	8.9	123.2	179.6	174.7	55.9	179.1	143	70	70	70	0.022	1.001	6.819	841
845	134.540	134.102		0.16	0.16	1.32	1.05	0.36	83	83	70	2.88	2	74	0.040	104	104	224.0	0.09	0.86	11.9	123.2	179.4	174.6	55.9	179.1	144	70	70	70	0.021	1.001	7.136	880
846	134.701	134.262		0.16	0.16	1.32	1.05	0.36	83	83	70	2.86	2	74	0.044	100	99	224.3	-0.30	0.80	8.0	123.0	179.3	174.4	55.9	178.9	142	70	70	70	0.021	1.001	6.662	820
847	134.862	134.423		0.16	0.16	1.32	1.05	0.36	83	83	70	2.87	2	74	0.043	101	101	223.8	0.48	0.88	11.6	122.9	179.2	174.3	55.9	178.8	142	70	70	70	0.020	1.001	7.296	898
848	135.023	134.583		0.16	0.16	1.32	1.05	0.36	83	83	70	2.87	2	74	0.045	99	98	224.4	-0.56	0.82	12.6	122.8	179.1	174.2	55.9	178.7	141	70	70	70	0.020	1.001	6.815	838
849	135.184	134.743		0.16	0.16	1.32	1.05	0.36	83	83	70	2.87	2	74	0.043	101	100	224.3	0.14	0.80	10.5	122.8	179.0	174.0	55.9	178.6	140	70	70	70	0.019	1.001	6.673	820
850	135.345	134.905		0.16	0.16	1.32	1.05	0.36	83	83	70	2.87	2	74	0.045	99	99	224.1	0.18	0.80	12.9	122.5	178.8	173.9	55.9	178.5	136	70	70	70	0.019	1.001	6.662	817
851	135.506	135.064		0.16	0.16	1.32	1.05	0.36	83	83	70	2.87	2	74	0.044	100	99	224.0	0.03	0.82	12.2	122.5	178.7	173.7	55.9	178.4	135	70	70	70	0.019	1.001	6.815	836
852	135.667	135.224		0.16	0.16	1.32	1.05	0.36	82	83	70	2.86	2	74	0.045	99	98	225.0	-0.92	0.79	10.4	122.5	178.7	173.7	55.8	178.3	137	70	70	70	0.018	1.001	6.557	804
853	135.827	135.385		0.16	0.16	1.32	1.06	0.36	82	83	70	2.86	2	74	0.046	97	98	224.2	0.77	0.83	7.8	122.3	178.5	173.5	55.8	178.1	136	70	70	70	0.018	1.001	6.944	850
854	135.988	135.546		0.16	0.16	1.32	1.05	0.36	82	83	70	2.86	2	74	0.047	97	97	224.2	-0.06	0.83	12.2	122.3	178.4	173.5	55.8	178.1	133	70	70	70	0.018	1.001	6.902	845
855	136.149	135.706		0.16	0.16	1.33	1.05	0.36	82	83	70	2.86	2	74	0.044	100	99	224.0	0.29	0.82	14.1	122.2	178.3	173.5	55.8	178.0	133	70	70	70	0.018	1.001	6.817	834
856	136.310	135.867		0.16	0.16	1.32	1.05	0.36	83	83	70	2.87	2	74	0.044	100	100	223.9	0.10	0.84	12.9	122.0	178.2	173.3	55.8	177.8	134	70	70	70	0.018	1.001	6.980	853
857	136.471	136.027		0.16	0.16	1.32	1.05	0.36	83	83	70	2.87	2	74	0.044	100	99	224.3	-0.46	0.84	10.4	121.9	178.1	173.2	55.8	177.7	132	70	70	70	0.018	1.001	6.973	851
858	136.632	136.187		0.16	0.16	1.32	1.05	0.36	83	83	70	2.87	2	74	0.044	100	99	223.8	0.50	0.84	13.6	121.8	178.0	173.1	55.8	177.6	131	70	70	70	0.017	1.001	6.981	851

Elapsed Time	Particulate Sampling Data																Fuel Weight, lb		Flow, gpm		Temperature Data, oF												
	Gas Meter Cubic Feet (1)	Gas Meter Cubic Feet (2)	Gas Meter Cubic Feet (amb)	Sample Rate, cfm (1)	Sample Rate, cfm (2)	Orifice dH (1)	Orifice dH (2)	Orifice dH (amb)	Meter oF (1)	Meter oF (2)	Meter oF (amb)	Meter Vac. In. Hg. (1)	Meter Vac. In. Hg. (2)	Dilution Tunnel Temp.	Dilution Tunnel dP	Pro. Rate (%) (1)	Pro. Rate (%) (2)	Scale Reading	Weight Change	Load Side Liquid Flow Rate	Boiler Side Liquid Flow Rate (optional)	Thermopile ΔT	Boiler to Heat Exch. Temp.	Heat Exch to Boiler Temp.	Inlet Load Temp.	Outlet Load Temp.	Stack	Filter (1)	Filter (2)	Ambient		Specific Heat of Inlet Water (BTU/lb-°F)	Mass Flow Rate of Inlet Water (lb/min)	Heat Output, Btu
859	136.793	136.347		0.16	0.16	1.31	1.05	0.36	82	83	70	2.87	2	74	0.045	99	98	224.1	-0.30	0.76	14.1	121.7	177.9	173.0	55.8	177.5	133	70	70	70	0.017	1.001	6.335	772
860	136.953	136.509		0.16	0.16	1.31	1.05	0.36	82	83	70	2.87	2	74	0.043	100	102	223.9	0.16	0.78	12.9	121.6	177.7	172.9	55.8	177.4	130	70	70	70	0.017	1.001	6.491	790
861	137.114	136.668		0.16	0.16	1.32	1.05	0.36	82	83	70	2.86	2	74	0.044	100	99	223.5	0.49	0.80	11.6	121.4	177.6	172.7	55.8	177.3	130	70	70	70	0.017	1.001	6.658	810
862	137.275	136.829		0.16	0.16	1.32	1.06	0.36	82	83	70	2.86	2	74	0.044	100	100	223.3	0.11	0.80	12.8	121.4	177.5	172.6	55.8	177.1	130	70	70	70	0.017	1.001	6.656	809
863	137.436	136.990		0.16	0.16	1.32	1.05	0.36	82	83	70	2.87	2	74	0.047	97	97	223.5	-0.13	0.82	12.0	121.3	177.4	172.5	55.8	177.0	129	70	70	70	0.017	1.001	6.819	828
864	137.597	137.150		0.16	0.16	1.32	1.05	0.36	82	83	70	2.86	2	74	0.046	98	97	224.1	-0.66	0.76	12.1	121.2	177.3	172.4	55.7	176.9	130	70	70	70	0.016	1.001	6.334	768
865	137.758	137.310		0.16	0.16	1.32	1.05	0.36	82	83	70	2.86	2	74	0.045	99	98	224.2	-0.05	0.78	13.2	121.0	177.2	172.4	55.8	176.8	128	70	70	70	0.016	1.001	6.493	787
866	137.919	137.471		0.16	0.16	1.32	1.05	0.36	82	83	70	2.86	2	74	0.043	101	101	224.5	-0.30	0.80	14.3	120.9	177.0	172.1	55.8	176.7	128	70	70	70	0.016	1.001	6.657	805
867	138.080	137.631		0.16	0.16	1.32	1.05	0.36	82	83	70	2.86	2	74	0.042	102	102	224.1	0.35	0.82	11.6	120.7	176.9	172.1	55.8	176.5	128	70	70	70	0.016	1.001	6.820	824
868	138.242	137.791		0.16	0.16	1.32	1.05	0.36	82	83	70	2.87	2	74	0.045	99	98	223.9	0.23	0.90	10.4	120.5	176.7	171.9	55.8	176.4	126	70	70	70	0.016	1.001	7.465	901
869	138.402	137.952		0.16	0.16	1.31	1.05	0.36	82	83	70	2.88	2	78	0.044	100	100	223.6	0.29	0.80	14.2	120.3	176.5	171.6	55.9	176.2	126	70	70	70	0.016	1.001	6.655	802
870	138.563	138.112		0.16	0.16	1.31	1.04	0.36	82	83	70	2.89	2	78	0.041	104	103	223.1	0.48	0.80	14.2	120.2	176.4	171.6	55.9	176.1	151	70	70	70	0.037	1.001	6.658	801
871	138.723	138.271		0.16	0.16	1.32	1.05	0.36	82	83	70	2.87	2	74	0.041	103	102	223.4	-0.26	0.84	12.9	120.2	176.4	171.5	55.8	176.0	145	71	70	70	0.023	1.001	6.981	840
872	138.884	138.432		0.16	0.16	1.32	1.05	0.36	82	83	70	2.87	2	74	0.046	98	98	223.6	-0.24	0.84	14.2	120.1	176.3	171.4	55.8	175.9	142	70	69	70	0.021	1.001	6.980	840
873	139.045	138.593		0.16	0.16	1.31	1.04	0.36	82	83	70	2.87	2	74	0.045	99	99	223.1	0.52	0.80	14.2	120.1	176.2	171.4	55.8	175.9	139	70	70	70	0.020	1.001	6.659	801
874	139.206	138.753		0.16	0.16	1.32	1.05	0.36	82	83	70	2.86	2	74	0.040	105	104	223.2	-0.06	0.82	13.1	120.0	176.0	171.2	55.8	175.7	137	70	70	70	0.019	1.001	6.817	819
875	139.367	138.913		0.16	0.16	1.32	1.05	0.36	82	83	70	2.87	2	74	0.046	98	97	223.7	-0.53	0.84	14.6	119.9	175.9	171.1	55.8	175.6	136	70	70	70	0.018	1.001	6.979	837
876	139.528	139.074		0.16	0.16	1.31	1.05	0.36	82	83	70	2.87	2	74	0.044	100	100	223.3	0.41	0.80	14.3	119.7	175.8	171.0	55.8	175.5	134	70	70	70	0.018	1.001	6.654	797
877	139.688	139.234		0.16	0.16	1.31	1.05	0.36	82	83	70	2.86	2	74	0.046	97	97	223.6	-0.28	0.85	13.0	119.5	175.7	170.8	55.8	175.3	134	70	70	70	0.017	1.001	7.094	849
878	139.849	139.394		0.16	0.16	1.31	1.05	0.36	82	83	70	2.87	2	74	0.046	98	97	223.1	0.46	0.82	14.2	119.4	175.6	170.8	55.8	175.2	131	70	70	70	0.017	1.001	6.813	815
879	140.010	139.556		0.16	0.16	1.32	1.05	0.36	82	83	70	2.86	2	74	0.046	98	98	223.5	-0.43	0.79	14.3	119.3	175.4	170.6	55.8	175.1	130	70	70	70	0.017	1.001	6.550	783
880	140.171	139.715		0.16	0.16	1.32	1.05	0.36	82	83	70	2.86	2	74	0.046	98	96	223.7	-0.15	0.86	14.5	119.1	175.2	170.4	55.8	174.9	131	70	70	70	0.016	1.001	7.141	852
881	140.332	139.876		0.16	0.16	1.32	1.05	0.36	82	83	70	2.86	2	74	0.045	99	99	223.3	0.33	0.85	15.5	119.0	175.2	170.4	55.8	174.8	130	70	70	70	0.016	1.001	7.055	841
882	140.493	140.037		0.16	0.16	1.32	1.05	0.36	82	83	70	2.86	2	74	0.039	106	106	223.1	0.21	0.81	12.9	118.9	175.1	170.2	55.8	174.7	128	70	70	70	0.017	1.001	6.729	801
883	140.653	140.197		0.16	0.16	1.31	1.05	0.36	82	83	70	2.86	2	74	0.044	99	99	223.6	-0.43	0.81	14.0	118.8	174.9	170.0	55.8	174.6	126	70	70	70	0.016	1.001	6.786	807
884	140.814	140.357		0.16	0.16	1.32	1.06	0.36	82	83	70	2.86	2	74	0.046	98	97	223.6	-0.08	0.82	14.2	118.7	174.8	169.9	55.8	174.5	125	70	70	70	0.016	1.001	6.865	816
885	140.975	140.518		0.16	0.16	1.32	1.06	0.36	82	83	70	2.87	2	74	0.045	99	99	224.2	-0.54	0.80	14.3	118.5	174.7	170.0	55.8	174.4	125	70	70	70	0.016	1.001	6.658	790
886	141.136	140.679		0.16	0.16	1.32	1.05	0.36	82	83	70	2.86	2	74	0.044	100	100	223.7	0.50	0.82	15.5	118.3	174.6	169.8	55.9	174.3	125	70	70	70	0.016	1.001	6.818	808
887	141.297	140.838		0.16	0.16	1.32	1.05	0.36	82	83	70	2.87	2	74	0.044	100	99	222.8	0.87	0.84	13.0	118.3	174.4	169.6	55.8	174.1	125	70	70	70	0.015	1.001	6.982	827
888	141.457	140.999		0.16	0.16	1.32	1.05	0.36	82	83	70	2.86	2	74	0.046	97	98	223.5	-0.67	0.72	15.5	118.1	174.3	169.7	55.9	174.0	123	70	70	70	0.015	1.001	6.006	710
889	141.618	141.160		0.16	0.16	1.32	1.05	0.36	82	83	70	2.86	2	74	0.049	95	95	223.1	0.33	0.78	15.5	118.1	174.3	169.5	55.9	173.9	126	70	70	70	0.015	1.001	6.492	767
890	141.779	141.320		0.16	0.16	1.31	1.05	0.36	82	83	70	2.87	2	74	0.048	96	95	223.4	-0.21	0.80	15.5	118.0	174.2	169.5	55.8	173.9	123	70	70	70	0.015	1.001	6.656	787
891	141.940	141.480		0.16	0.16	1.32	1.05	0.36	82	83	70	2.86	2	74	0.044	100	99	223.6	-0.26	0.82	14.2	117.8	174.0	169.3	55.8	173.6	122	70	70	70	0.014	1.001	6.817	804
892	142.101	141.641		0.16	0.16	1.32	1.05	0.36	82	83	70	2.87	2	74	0.046	98	98	223.5	0.15	0.78	14.3	117.6	173.9	169.1	55.8	173.5	122	70	70	70	0.014	1.001	6.497	765
893	142.262	141.801		0.16	0.16	1.32	1.05	0.36	82	83	70	2.87	2	74	0.046	98	97	223.2	0.21	0.78	14.3	117.5	173.7	169.2	55.8	173.4	122	70	70	70	0.015	1.001	6.500	765
894	142.423	141.961		0.16	0.16	1.32	1.05	0.36	82	83	70	2.86	2	74	0.045	99	98	223.2	0.04	0.86	15.4	117.4	173.7	168.9	55.9	173.3	122	70	70	70	0.014	1.001	7.148	840
895	142.584	142.122		0.16	0.16	1.32	1.05	0.36	82	82	70	2.87	2	74	0.045	99	99	223.1	0.14	0.84	15.5	117.3	173.5	168.9	55.9	173.2	120	70	70	70	0.014	1.001	6.986	820
896	142.745	142.282		0.16	0.16	1.32	1.05	0.36	82	82	70	2.87	2	74	0.046	98	97	223.5	-0.45	0.84	15.5	117.2	173.4	168.8	55.9	173.1	121	70	70	70	0.014	1.001	6.985	820
897	142.905	142.442		0.16	0.16	1.32	1.05	0.36	82	83	70	2.86	2	74	0.044	99	99	223.1	0.42	0.80	14.2	117.0	173.3	168.4	55.9	172.9	119	70	70	70	0.014	1.001	6.655	780
898	143.066	142.603		0.16	0.16	1.32	1.06	0.36	82	83	70	2.86	2	74	0.043	101	101	223.7	-0.65	0.82	15.6	116.8	173.0	168.3	55.9	172.7	120	70	70	70	0.014	1.001	6.817	798
899	143.228	142.764		0.16	0.16	1.32	1.05	0.36	82	83	70	2.87	2	74	0.040	105	105	223.1	0.67	0.82	15.5	116.7	173.0	168.4	55.9	172.6	117	70	70	70	0.014	1.001	6.816	796
900	143.389	142.923		0.16	0.16	1.32	1.04	0.36	82	83	70	2.87	2	80	0.044	100	99	222.6	0.50	0.80	15.4	116.6	172.8	168.0	55.9	172.5	119	70	70	70	0.014	1.001	6.656	777
901	143.549	143.084		0.16	0.16	1.32	1.05	0.36	82	83	70	2.87	2	76	0.046	97	98	223.1	-0.52	0.80	15.5	116.5	172.7	168.0	55.9	172.4	154	70	70	70	0.037	1.001	6.658	777
902	143.710	143.244		0.16	0.16	1.31	1.05	0.36	82	83	70	2.86	2	74	0.048	96	95	222.3	0.84	0.86	15.5	116.4	172.6	168.1	55.9	172.3	138	71	70	70	0.022	1.001	7.142	832
903	143.871	143.404		0.16	0.16	1.32	1.05	0.36	82	82	70	2.86	2	74	0.043	101	101	223.3	-1.04	0.86	15.5	116.2	172.5	167.7	55.9	172.1	136	70	70	70	0.020	1.001	7.142	831
904	144.031	143.564		0.16	0.16	1.32	1.05	0.36	82	83	70	2.86	2	74	0.046	97	97	222.7	0.57	0.80	15.5	116.2	172.4	167.7	55.9	172.1	134	70	70	70	0.018	1.001	6.657	775
905	144.192	143.725		0.16	0.16	1.32	1.05	0.36	82	82	70	2.86	2	74	0.043	101	101	223.2	-0.43	0.78	15.5	116.0	172.3	167.6	55.9	172.0	132	70	70	70	0.018	1.001	6.488	754
906	144.353	143.885		0.16	0.16	1.32	1.05	0.36	82	82	70	2.87	2	74	0.048	96	95	222.8	0.38	0.78	15.5	115.9	172.2	167.4	55.9	171.9	130	70	70	70	0.017	1.001	6.497	754
907	144.514	144.045		0.16	0.16	1.32	1.05	0.36	82	82	70	2.86	2	74	0.049	95	94	222.9	-0.08	0.80	15.5	115.8	172.1	167.3	55.9	171.7	128	70	70	70	0.017	1.001	6.641	770
908	144.675	144.207		0.16	0.16	1.31	1.05	0.36	82	82	70	2.87	2	74	0.044	100	101	223.1	-0.25	0.83	14.4	115.7	171.9	167.2	55.9	171.6	128	70	70	70	0.016	1.001	6.900	799
909	144.835	144.366		0.16	0.16	1.31	1.05	0.36	82	82	70	2.87	2	74	0.045	98	98	222.3	0.80	0.81	15.5	115.5	171.8	167.5	56.0	171.4	127	70	70	70	0.016	1.001	6.765	782
910	144.996	144.527		0.16	0.16	1.32	1.05	0.36	82	82	70	2.87	2	74	0.044	100	100	222.9	-0.57	0.80	15.5	115.4	171.7	166.9	56.0	171.3	125	70	70	70	0.015	1.001	6.654	769
911	145.157	144.688		0.16	0.16	1.31	1.05	0.36	82	82	70	2.87	2	74	0.045	99	99	223.1	-0.18	0.76	15.5	115.3	171.5	166.9	56.0	171.3	124	70	70	70	0.015	1.001	6.302	727
912	145.317	144.848		0.16	0.16	1.32	1.05	0.36	82	82	70	2.86	2	74	0.044	99	99	223.1	0.00	0.74	15.5	115.1	171.4	167.0	56.0	171.1	124	70	70	70	0.015	1.001	6.170	711
913	145.478	145.008		0.16	0.16	1.32	1.06	0.36	82	82	70	2.87	2	74	0.045	99	98	223.1	-0.05	0.75	15.5	115.1	171.3	166.7	55.9	171.0	124	70	70	70	0.014	1.001	6.219	717
914	145.639	145.169		0.16	0.16	1.32	1.06	0.36	82	82	70	2.86	2	74	0.044	100	100	222.9	0.24	0.84	15.5	114.8	171.2	166.5	55.9	170.8	123	70	70	70	0.015	1.001	6.982	803
915	145.800	145.329		0.16	0.16	1.32	1.04	0.36	82	82	70	2.87	2	74	0.043	101	101	222.7	0.22	0.78	15.4	114.8	171.0	166.4	55.9	170.7	121	70	70	70	0.015	1.001	6.493	746
916	145.961	145.489		0.16	0.16	1.32	1.05	0.36	82	82	70	2.87	2	74	0.047	97	96	222.8	-0.13	0.76	15.6	114.7	170.9	166.6	55.9	170.6	122	70	70	70	0.014	1.001	6.334	727
917	146.122	145.650		0.16	0.16	1.32	1.05	0.36	82	82	70	2.86	2	74	0.047	97	97	223.0	-0.19	0.80	14.3	114.6	170.8	166.2	55.9	170.5	120	70	70	70	0.014	1.001	6.656	764
918	146.282	145.811		0.16	0.16	1.32	1.05	0.36	82	82	70	2.87	2	74	0.042	102	102	222.8	0.15	0.84	15.5	114.4	170.6	166.0	55.9	170.3	120	70	70	70	0.014	1.001	6.981	800
919	146.443	145.971		0.16	0.16	1.32	1.05	0.36	82	82	70	2.86	2	74	0.044	100	99	222.6	0.17	0.82	15.6	114.3	170.6	166.0	55.9	170.2	122	70	70	70	0.014	1.001	6.819	780
920	146.604	146.131		0.16	0.16	1.32	1.05	0.36	82	82	70	2.87	2	74	0.045	99	98	222.6	-0.01	0.84	15.6	114.2	170.4	165.8	55.9	170.1	121	70	70	70	0.014	1.001	6.980	798

Elapsed Time	Particulate Sampling Data																Fuel Weight, lb		Flow, gpm		Temperature Data, oF												
	Gas Meter Cubic Feet (1)	Gas Meter Cubic Feet (2)	Gas Meter Cubic Feet (amb)	Sample Rate, cfm (1)	Sample Rate, cfm (2)	Orifice dH (1)	Orifice dH (2)	Orifice dH (amb)	Meter oF (1)	Meter oF (2)	Meter oF (amb)	Meter Vac. In. Hg. (1)	Meter Vac. In. Hg. (2)	Dilution Tunnel Temp.	Dilution Tunnel dP	Pro. Rate (%) (1)	Pro. Rate (%) (2)	Scale Reading	Weight Change	Load Side Liquid Flow Rate	Boiler Side Liquid Flow Rate (optional)	Thermopile ΔT	Boiler to Heat Exch. Temp.	Heat Exch to Boiler Temp.	Inlet Load Temp.	Outlet Load Temp.	Stack	Filter (1)	Filter (2)	Ambient		Specific Heat of Inlet Water (BTU/lb-°F)	Mass Flow Rate of Inlet Water (lb/min)	Heat Output, Btu
921	146.764	146.292		0.16	0.16	1.32	1.05	0.36	82	82	70	2.86	2	74	0.042	102	102	222.5	0.13	0.82	15.57	114.0	170.3	165.7	55.9	169.9	120	70	70	70	0.014	1.001	6.816	778
922	146.925	146.452		0.16	0.16	1.32	1.05	0.36	82	82	70	2.86	2	74	0.046	98	97	222.5	0.06	0.82	15.43	114.0	170.1	165.5	55.8	169.9	118	70	70	70	0.014	1.001	6.816	778
923	147.086	146.612		0.16	0.16	1.32	1.05	0.36	82	82	70	2.87	2	74	0.045	99	98	223.0	-0.58	0.86	15.45	113.9	170.0	165.3	55.8	169.7	118	70	70	70	0.014	1.001	7.143	814
924	147.247	146.773		0.16	0.16	1.32	1.05	0.36	82	82	70	2.87	2	74	0.044	100	100	222.9	0.13	0.80	15.50	113.7	169.9	165.2	55.9	169.6	119	70	70	70	0.013	1.001	6.657	758
925	147.408	146.933		0.16	0.16	1.32	1.05	0.36	82	82	70	2.87	2	74	0.046	98	97	223.1	-0.19	0.84	15.52	113.5	169.7	165.0	55.9	169.4	117	70	70	70	0.014	1.001	6.983	794
926	147.568	147.094		0.16	0.16	1.32	1.05	0.36	82	82	70	2.86	2	74	0.042	102	102	223.0	0.11	0.82	15.48	113.5	169.6	164.9	55.8	169.3	118	70	70	70	0.013	1.001	6.824	776
927	147.729	147.255		0.16	0.16	1.32	1.05	0.36	82	82	70	2.87	2	74	0.046	98	98	222.9	0.12	0.86	15.49	113.4	169.5	164.8	55.8	169.2	117	70	70	70	0.014	1.001	7.143	811
928	147.890	147.414		0.16	0.16	1.32	1.05	0.36	82	82	70	2.86	2	74	0.046	98	97	222.9	-0.08	0.86	15.48	113.3	169.4	164.6	55.8	169.1	118	70	70	70	0.013	1.001	7.141	810
929	148.051	147.574		0.16	0.16	1.32	1.05	0.36	82	82	70	2.87	2	74	0.043	101	101	223.0	-0.01	0.74	15.62	113.1	169.3	164.6	55.9	168.9	117	70	70	70	0.013	1.001	6.171	699
930	148.212	147.735		0.16	0.16	1.32	1.05	0.36	82	82	70	2.86	2	74	0.042	102	102	222.5	0.48	0.82	15.58	113.0	169.1	164.5	55.8	168.8	118	70	70	70	0.012	1.001	6.818	771
931	148.373	147.896		0.16	0.16	1.31	1.04	0.36	82	82	70	2.88	2	82	0.045	99	100	222.3	0.20	0.80	15.51	112.9	169.1	164.3	55.8	168.7	117	70	70	70	0.013	1.001	6.657	753
932	148.534	148.055		0.16	0.16	1.31	1.05	0.36	82	82	70	2.86	2	76	0.045	99	98	221.7	0.53	0.88	15.48	112.7	168.9	164.3	55.8	168.6	146	71	70	70	0.035	1.001	7.305	825
933	148.694	148.215		0.16	0.16	1.32	1.05	0.36	82	82	70	2.87	2	74	0.043	100	101	222.2	-0.46	0.83	15.59	112.6	168.7	164.2	55.9	168.5	136	70	70	70	0.019	1.001	6.953	784
934	148.855	148.376		0.16	0.16	1.32	1.05	0.36	82	82	70	2.86	2	74	0.046	98	98	222.2	0.05	0.84	15.48	112.5	168.7	164.1	55.9	168.3	133	70	70	70	0.018	1.001	6.980	786
935	149.016	148.536		0.16	0.16	1.32	1.05	0.36	82	82	70	2.87	2	74	0.043	101	101	223.6	-1.43	0.85	15.48	112.3	168.5	164.0	55.9	168.2	131	70	70	70	0.018	1.001	7.127	801
936	149.177	148.696		0.16	0.16	1.32	1.05	0.36	82	82	70	2.87	2	74	0.047	97	96	223.1	0.50	0.77	15.47	112.2	168.4	163.8	55.9	168.1	130	70	70	70	0.016	1.001	6.438	723
937	149.337	148.857		0.16	0.16	1.31	1.05	0.36	82	82	70	2.87	2	74	0.046	97	98	222.7	0.42	0.80	15.52	112.1	168.3	163.6	55.9	168.0	127	70	70	70	0.016	1.001	6.655	747
938	149.498	149.017		0.16	0.16	1.31	1.05	0.36	82	82	70	2.87	2	74	0.041	103	103	222.8	-0.09	0.86	15.49	111.9	168.1	163.5	55.9	167.8	127	70	70	70	0.016	1.001	7.143	800
939	149.659	149.177		0.16	0.16	1.31	1.05	0.36	82	82	70	2.87	2	74	0.042	102	102	222.1	0.70	0.84	15.53	111.9	168.0	163.4	55.9	167.7	124	70	70	70	0.015	1.001	6.985	782
940	149.820	149.339		0.16	0.16	1.32	1.06	0.36	82	82	70	2.87	2	74	0.043	101	102	222.9	-0.80	0.86	15.55	111.7	167.9	163.3	55.9	167.6	123	70	70	70	0.015	1.001	7.143	799
941	149.980	149.498		0.16	0.16	1.32	1.05	0.36	82	82	70	2.87	2	74	0.042	102	101	222.3	0.58	0.86	15.53	111.5	167.7	163.1	55.8	167.4	121	70	70	70	0.015	1.001	7.142	798
942	150.141	149.659		0.16	0.16	1.32	1.05	0.36	82	82	70	2.87	2	74	0.049	95	95	222.8	-0.53	0.82	15.56	111.5	167.6	163.0	55.8	167.3	121	70	70	70	0.014	1.001	6.827	762
943	150.302	149.820		0.16	0.16	1.32	1.05	0.36	82	82	70	2.86	2	74	0.043	101	101	221.5	1.29	0.78	15.48	111.3	167.4	162.9	55.8	167.2	121	70	70	70	0.014	1.001	6.495	724
944	150.462	149.980		0.16	0.16	1.32	1.05	0.36	82	82	70	2.87	2	74	0.045	98	98	222.0	-0.47	0.86	15.51	111.2	167.4	162.8	55.8	167.1	119	70	70	70	0.014	1.001	7.142	795
945	150.623	150.140		0.16	0.16	1.32	1.06	0.36	82	82	70	2.86	2	74	0.044	100	99	223.0	-1.03	0.82	15.48	111.1	167.2	162.6	55.8	166.9	119	70	70	70	0.014	1.001	6.818	758
946	150.784	150.301		0.16	0.16	1.32	1.05	0.36	82	82	70	2.87	2	74	0.046	98	98	222.8	0.20	0.80	15.44	111.0	167.1	162.5	55.8	166.8	120	70	70	70	0.013	1.001	6.657	740
947	150.945	150.461		0.16	0.16	1.32	1.05	0.36	82	82	70	2.86	2	74	0.043	101	101	222.7	0.15	0.86	15.66	110.8	166.9	162.4	55.8	166.7	120	70	70	70	0.012	1.001	7.145	793
948	151.105	150.621		0.16	0.16	1.32	1.05	0.36	82	82	70	2.87	2	74	0.043	100	101	222.5	0.21	0.84	15.58	110.6	166.8	162.6	55.8	166.5	119	70	70	70	0.013	1.001	6.982	773
949	151.266	150.783		0.16	0.16	1.32	1.08	0.36	82	82	70	2.87	2	74	0.044	100	101	222.4	0.11	0.84	15.53	110.6	166.7	162.2	55.8	166.4	118	70	70	70	0.013	1.001	6.979	773
950	151.427	150.947		0.16	0.16	1.32	1.08	0.36	82	82	70	2.86	2	74	0.044	100	102	222.3	0.02	0.76	15.50	110.5	166.6	162.1	55.8	166.3	116	70	70	70	0.013	1.001	6.331	700
951	151.588	151.109		0.16	0.16	1.32	1.08	0.36	82	82	70	2.87	2	74	0.040	105	106	222.7	-0.37	0.76	15.56	110.3	166.4	161.8	55.8	166.1	117	70	70	70	0.012	1.001	6.330	699
952	151.749	151.271		0.16	0.16	1.32	1.08	0.36	82	82	70	2.87	2	74	0.045	99	100	222.2	0.48	0.80	15.56	110.3	166.4	161.9	55.8	166.1	118	70	70	70	0.013	1.001	6.656	735
953	151.909	151.433		0.16	0.16	1.32	1.08	0.36	82	82	70	2.86	2	74	0.044	99	101	222.2	0.07	0.80	15.49	110.1	166.2	161.8	55.8	165.9	117	70	70	70	0.013	1.001	6.654	733
954	152.070	151.596		0.16	0.16	1.32	1.08	0.36	82	82	70	2.86	2	74	0.044	100	101	222.6	-0.47	0.86	15.47	110.0	166.1	161.6	55.8	165.8	118	70	70	70	0.013	1.001	7.139	786
955	152.231	151.759		0.16	0.16	1.32	1.08	0.36	82	82	70	2.86	2	74	0.043	101	103	223.0	-0.39	0.82	15.49	109.8	166.0	161.4	55.8	165.6	115	70	70	70	0.013	1.001	6.823	750
956	152.391	151.921		0.16	0.16	1.32	1.08	0.36	82	82	70	2.86	2	74	0.043	100	102	222.2	0.86	0.82	15.50	109.6	165.8	161.3	55.8	165.5	116	70	70	70	0.012	1.001	6.819	749
957	152.552	152.083		0.16	0.16	1.33	1.08	0.36	82	82	70	2.87	2	74	0.045	99	100	222.7	-0.51	0.80	15.46	109.5	165.6	161.2	55.9	165.4	117	70	70	70	0.012	1.001	6.660	730
958	152.713	152.246		0.16	0.16	1.32	1.08	0.36	82	82	70	2.86	2	74	0.043	101	103	221.9	0.74	0.78	15.54	109.4	165.5	161.1	55.9	165.2	114	70	70	70	0.012	1.001	6.494	711
959	152.874	152.409		0.16	0.16	1.32	1.08	0.36	82	82	70	2.86	2	74	0.045	99	100	222.7	-0.73	0.78	15.51	109.3	165.4	161.0	55.9	165.1	116	70	70	70	0.012	1.001	6.490	710
960	153.035	152.571		0.16	0.16	1.32	1.08	0.36	82	82	70	2.87	2	74	0.046	98	98	222.6	0.10	0.72	15.48	109.0	165.3	160.9	55.9	165.0	115	70	70	70	0.012	1.001	6.024	658
961	153.196	152.733		0.16	0.16	1.32	1.08	0.36	82	82	70	2.87	2	74	0.043	101	102	222.2	0.33	0.80	15.55	109.0	165.3	160.9	55.9	164.9	116	70	70	70	0.012	1.001	6.670	728
962	153.357	152.895		0.16	0.16	1.31	1.07	0.36	82	82	70	2.88	2	81	0.041	104	105	222.5	-0.30	0.82	15.58	108.8	165.0	160.7	55.9	164.7	113	70	70	70	0.011	1.001	6.818	743
963	153.517	153.058		0.16	0.16	1.32	1.08	0.36	82	82	70	2.87	2	76	0.045	98	100	222.9	-0.37	0.81	15.55	108.7	164.9	160.5	55.9	164.6	140	71	70	70	0.029	1.001	6.723	732
964	153.678	153.220		0.16	0.16	1.32	1.08	0.36	82	82	70	2.87	2	75	0.045	99	100	223.2	-0.27	0.80	15.54	108.6	164.8	160.3	55.9	164.5	133	70	70	70	0.018	1.001	6.657	724
965	153.839	153.382		0.16	0.16	1.32	1.08	0.36	82	82	70	2.86	2	75	0.047	97	98	222.2	0.97	0.83	15.56	108.5	164.7	160.2	55.9	164.4	130	70	70	70	0.017	1.001	6.920	751
966	153.999	153.545		0.16	0.16	1.31	1.08	0.36	82	82	70	2.87	2	75	0.042	102	104	222.0	0.21	0.80	15.54	108.3	164.6	160.2	55.9	164.3	129	70	70	70	0.016	1.001	6.659	722
967	154.160	153.707		0.16	0.16	1.31	1.08	0.36	82	82	70	2.87	2	75	0.045	99	100	221.1	0.93	0.80	15.48	108.2	164.4	160.1	56.0	164.2	126	70	70	70	0.016	1.001	6.710	727
968	154.321	153.870		0.16	0.16	1.31	1.08	0.36	82	82	70	2.86	2	75	0.043	101	103	222.2	-1.19	0.84	15.47	108.0	164.3	159.9	56.0	164.0	125	70	70	70	0.015	1.001	6.981	755
969	154.482	154.032		0.16	0.16	1.31	1.08	0.36	82	82	70	2.87	2	75	0.045	99	100	222.2	0.01	0.80	15.46	107.8	164.1	159.8	56.0	163.8	123	70	70	70	0.015	1.001	6.656	719
970	154.642	154.194		0.16	0.16	1.31	1.08	0.36	82	82	70	2.87	2	75	0.045	98	100	222.4	-0.21	0.82	15.49	107.8	164.1	159.7	56.0	163.7	122	70	70	70	0.015	1.001	6.820	736
971	154.803	154.357		0.16	0.16	1.31	1.08	0.36	82	82	70	2.86	2	75	0.046	98	99	222.3	0.11	0.82	15.50	107.6	163.9	159.7	56.0	163.6	120	70	70	70	0.014	1.001	6.819	735
972	154.964	154.520		0.16	0.16	1.32	1.08	0.36	82	82	70	2.87	2	74	0.044	100	101	222.3	0.02	0.86	15.51	107.5	163.8	159.6	56.0	163.6	121	70	70	70	0.014	1.001	7.146	769
973	155.124	154.682		0.16	0.16	1.32	1.08	0.36	82	82	70	2.87	2	75	0.047	96	98	221.6	0.70	0.76	15.53	107.3	163.6	159.4	56.1	163.4	118	70	70	70	0.014	1.001	6.334	680
974	155.285	154.844		0.16	0.16	1.32	1.08	0.36	82	82	70	2.87	2	74	0.043	101	102	223.3	-1.65	0.88	15.44	107.1	163.5	159.3	56.1	163.2	117	70	70	70	0.013	1.001	7.308	784
975	155.446	155.007		0.16	0.16	1.32	1.08	0.36	82	82	70	2.86	2	74	0.045	99	100	222.7	0.56	0.86	15.56	107.0	163.4	159.2	56.1	163.1	118	70	70	70	0.013	1.001	7.143	765
976	155.607	155.170		0.16	0.16	1.32	1.08	0.36	82	82	70	2.86	2	75	0.045	99	100	222.4	0.28	0.84	15.47	106.8	163.2	159.0	56.1	163.0	118	70	70	70	0.013	1.001	6.981	747
977	155.767	155.332		0.16	0.16	1.32	1.07	0.36	82	82	70	2.87	2	75	0.044	99	101	222.5	-0.08	0.80	15.52	106.8	163.2	158.9	56.1	162.9	116	70	70	70	0.013	1.001	6.658	712
978	155.928	155.494		0.16	0.16	1.32	1.08	0.36	82	82	70	2.86	2	75	0.045	99	100	222.8	-0.25	0.78	15.47	106.6	163.0	158.8	56.1	162.8	116	70	70	70	0.012	1.001	6.493	693
979	156.089	155.656		0.16	0.16	1.32	1.08	0.36	82	82	70	2.87	2	75	0.040	105	106	222.4	0.37	0.88	15.55	106.5	162.9	158.6	56.1	162.6	115	70	70	70	0.012	1.001	7.309	779
980	156.250	155.819		0.16	0.16	1.32	1.07	0.36	82	82	70	2.87	2	75	0.043	101	103	221.7	0.66	0.74	15.44	106.3	162.8	158.5	56.2	162.5	114	70	70	70	0.012	1.001	6.173	657
981	156.411	155.982		0.16	0.16	1.32	1.08	0.36	82	82	70	2.86	2	75	0.043	101	103	222.3	-0.57	0.82	15.44	106.3	162.6	158.3	56.1	162.4	114	70	70	70	0.012	1.001	6.821	726
982	156.571	156.144		0.16	0.16	1.32	1.07	0.36	82	82	70	2.87	2	75	0.040	104	106	222.1	0.23	0.82	15.49	106.0	162.5	158.2	56.2	162.2	113	70	70	70	0.012	1.001	6.821	724

Elapsed Time	Particulate Sampling Data																Fuel Weight, lb		Flow, gpm		Temperature Data, oF												
	Gas Meter Cubic Feet (1)	Gas Meter Cubic Feet (2)	Gas Meter Cubic Feet (amb)	Sample Rate, cfm (1)	Sample Rate, cfm (2)	Orifice dH (1)	Orifice dH (2)	Orifice dH (amb)	Meter oF (1)	Meter oF (2)	Meter oF (amb)	Meter Vac. In. Hg. (1)	Meter Vac. In. Hg. (2)	Dilution Tunnel Temp.	Dilution Tunnel dP	Pro. Rate (%) (1)	Pro. Rate (%) (2)	Scale Reading	Weight Change	Load Side Liquid Flow Rate	Boiler Side Liquid Flow Rate (optional)	Thermopile ΔT	Boiler to Heat Exch. Temp.	Heat Exch to Boiler Temp.	Inlet Load Temp.	Outlet Load Temp.	Stack	Filter (1)	Filter (2)	Ambient		Specific Heat of Inlet Water (BTU/lb-°F)	Mass Flow Rate of Inlet Water (lb/min)	Heat Output, Btu
983	156.732	156.306		0.16	0.16	1.32	1.08	0.36	82	82	70	2.87	2	74	0.045	99	100	222.3	-0.24	0.76	15.52	105.9	162.4	158.1	56.2	162.1	114	70	70	70	0.012	1.001	6.333	672
984	156.893	156.469		0.16	0.16	1.32	1.08	0.36	82	82	70	2.86	2	75	0.044	100	101	222.2	0.08	0.80	15.44	105.9	162.3	157.9	56.1	162.0	112	70	70	70	0.012	1.001	6.659	706
985	157.054	156.632		0.16	0.16	1.32	1.09	0.36	82	82	70	2.87	2	75	0.044	100	101	221.9	0.28	0.84	15.45	105.8	162.2	157.8	56.1	161.9	112	70	70	70	0.011	1.001	6.984	739
986	157.215	156.794		0.16	0.16	1.32	1.08	0.36	82	82	70	2.86	2	75	0.043	101	102	222.1	-0.16	0.80	15.47	105.6	162.0	157.7	56.1	161.7	112	70	70	70	0.011	1.001	6.659	704
987	157.376	156.956		0.16	0.16	1.32	1.08	0.36	82	82	70	2.87	2	75	0.043	101	102	222.6	-0.46	0.90	15.51	105.6	161.9	157.7	56.1	161.7	112	70	70	70	0.011	1.001	7.465	789
988	157.537	157.118		0.16	0.16	1.32	1.08	0.36	82	82	70	2.86	2	74	0.044	100	101	222.3	0.22	0.82	15.48	105.4	161.7	157.5	56.1	161.5	113	70	70	70	0.011	1.001	6.821	720
989	157.697	157.281		0.16	0.16	1.32	1.01	0.36	82	82	70	2.86	2	74	0.045	98	100	221.7	0.62	0.88	15.45	105.3	161.6	157.4	56.0	161.3	113	70	70	70	0.011	1.001	7.298	769
990	157.858	157.443		0.16	0.16	1.32	1.07	0.36	82	82	70	2.86	2	75	0.044	100	101	222.5	-0.83	0.76	15.51	105.1	161.5	157.3	56.1	161.2	114	70	70	70	0.011	1.001	6.360	670
991	158.019	157.604		0.16	0.16	1.32	1.07	0.36	82	82	70	2.86	2	75	0.048	96	96	222.4	0.18	0.82	15.57	105.0	161.4	157.1	56.1	161.1	113	70	70	70	0.011	1.001	6.800	715
992	158.180	157.766		0.16	0.16	1.32	1.07	0.36	82	82	70	2.87	2	75	0.046	98	99	222.0	0.37	0.80	15.51	104.8	161.2	157.0	56.1	161.0	110	70	70	70	0.011	1.001	6.656	699
993	158.340	157.927		0.16	0.16	1.32	1.06	0.36	82	82	70	2.89	2	81	0.043	101	102	221.8	0.23	0.80	15.56	104.7	161.1	157.0	56.1	160.8	113	70	70	70	0.011	1.001	6.654	698
994	158.501	158.089		0.16	0.16	1.32	1.07	0.36	82	82	70	2.87	2	75	0.043	101	102	222.2	-0.44	0.86	15.55	104.6	161.0	156.8	56.2	160.7	133	71	71	70	0.029	1.001	7.191	753
995	158.662	158.250		0.16	0.16	1.32	1.07	0.36	82	82	70	2.85	2	74	0.045	99	99	222.2	0.03	0.76	15.55	104.5	160.8	156.6	56.1	160.6	128	70	70	70	0.017	1.001	6.332	662
996	158.823	158.412		0.16	0.16	1.32	1.07	0.36	82	83	70	2.86	2	75	0.045	99	99	222.5	-0.33	0.78	15.57	104.4	160.8	156.5	56.1	160.5	126	70	70	70	0.016	1.001	6.504	680
997	158.983	158.574		0.16	0.16	1.31	1.07	0.36	82	82	70	2.87	2	75	0.046	97	99	222.0	0.48	0.87	15.56	104.3	160.6	156.7	56.1	160.3	124	70	70	70	0.015	1.001	7.218	753
998	159.144	158.735		0.16	0.16	1.32	1.07	0.36	82	82	70	2.86	2	75	0.043	101	101	222.3	-0.28	0.88	15.44	104.2	160.6	156.4	56.1	160.3	122	70	70	70	0.014	1.001	7.304	762
999	159.305	158.897		0.16	0.16	1.32	1.07	0.36	82	83	70	2.87	2	75	0.040	105	106	221.8	0.54	0.78	15.46	104.0	160.3	156.1	56.1	160.1	122	70	70	70	0.013	1.001	6.496	677
1000	159.465	159.058		0.16	0.16	1.32	1.07	0.36	82	82	70	2.86	2	74	0.045	98	99	221.4	0.35	0.88	15.49	103.9	160.3	156.1	56.1	160.0	119	70	70	70	0.013	1.001	7.306	760
1001	159.626	159.221		0.16	0.16	1.32	1.07	0.36	82	82	70	2.86	2	75	0.039	106	108	222.8	-1.39	0.78	15.49	103.8	160.1	156.1	56.0	159.8	119	70	70	70	0.013	1.001	6.492	675
1002	159.787	159.382		0.16	0.16	1.32	1.07	0.36	82	83	70	2.86	2	75	0.046	98	98	222.5	0.30	0.88	15.52	103.7	160.0	155.9	56.1	159.8	119	70	70	70	0.013	1.001	7.307	759
1003	159.948	159.543		0.16	0.16	1.32	1.07	0.36	82	83	70	2.87	2	74	0.044	100	100	221.9	0.57	0.80	15.48	103.6	160.0	155.8	56.1	159.7	118	70	70	70	0.012	1.001	6.657	690
1004	160.109	159.705		0.16	0.16	1.32	1.07	0.36	82	83	70	2.87	2	74	0.044	100	101	221.7	0.24	0.86	15.50	103.3	159.8	155.7	56.2	159.5	116	70	70	70	0.012	1.001	7.143	739
1005	160.269	159.867		0.16	0.16	1.32	1.07	0.36	82	83	70	2.86	2	74	0.043	100	102	221.7	-0.05	0.80	15.49	103.3	159.7	155.6	56.1	159.4	115	70	70	70	0.011	1.001	6.655	688
1006	160.430	160.028		0.16	0.16	1.32	1.07	0.36	82	83	70	2.86	2	75	0.042	102	102	220.5	1.26	0.86	15.48	103.1	159.5	155.5	56.1	159.2	115	70	70	70	0.012	1.001	7.140	737
1007	160.590	160.189		0.16	0.16	1.32	1.06	0.36	82	83	70	2.88	2	84	0.047	97	98	220.1	0.42	0.84	15.44	103.0	159.4	155.4	56.1	159.1	118	70	70	70	0.017	1.001	6.977	720
1008	160.751	160.350		0.16	0.16	1.32	1.07	0.36	82	83	70	2.87	2	87	0.042	103	103	218.8	1.22	0.80	15.36	103.0	159.5	155.4	56.1	159.1	141	71	71	70	0.029	1.001	6.654	686
1009	160.911	160.511		0.16	0.16	1.32	1.07	0.36	82	83	70	2.89	2	90	0.043	102	103	217.7	1.10	0.84	15.49	103.2	159.7	155.5	56.1	159.4	170	71	71	70	0.032	1.001	6.978	721
1010	161.071	160.672		0.16	0.16	1.32	1.07	0.36	82	83	70	2.89	2	94	0.045	100	101	216.9	0.84	0.86	15.47	103.8	160.4	156.0	56.1	159.8	188	71	71	70	0.035	1.001	7.141	742
1011	161.231	160.832		0.16	0.16	1.33	1.07	0.36	82	83	70	2.89	2	97	0.042	104	104	215.9	1.02	0.80	15.51	104.6	161.2	156.9	56.1	160.7	211	72	71	70	0.035	1.001	6.653	697
1012	161.392	160.994		0.16	0.16	1.32	1.07	0.36	82	83	70	2.89	2	100	0.044	102	103	215.3	0.61	0.78	15.52	105.4	162.0	157.7	56.1	161.5	230	72	71	70	0.037	1.001	6.491	685
1013	161.552	161.154		0.16	0.16	1.32	1.07	0.36	82	83	70	2.90	2	102	0.042	104	104	213.0	2.22	0.93	15.52	106.2	162.8	158.5	56.1	162.3	241	72	72	70	0.043	1.001	7.785	828
1014	161.713	161.314		0.16	0.16	1.31	1.07	0.36	82	83	70	2.91	2	104	0.039	109	108	212.7	0.37	0.84	15.56	107.1	163.8	159.3	56.2	163.2	249	73	72	70	0.045	1.001	6.979	748
1015	161.872	161.475		0.16	0.16	1.32	1.06	0.36	82	83	70	2.91	2	106	0.043	103	104	211.9	0.75	0.82	15.55	108.1	164.8	160.3	56.2	164.3	256	73	72	70	0.048	1.001	6.817	738
1016	162.032	161.635		0.16	0.16	1.31	1.06	0.36	82	83	70	2.91	2	107	0.045	101	101	210.0	1.94	0.84	15.63	109.1	165.8	161.3	56.2	165.3	261	73	73	70	0.047	1.001	6.976	762
1017	162.192	161.794		0.16	0.16	1.31	1.06	0.36	82	83	70	2.92	2	109	0.046	100	100	209.1	0.91	0.80	15.61	110.2	166.9	162.4	56.1	166.3	266	74	73	70	0.051	1.001	6.654	734
1018	162.351	161.955		0.16	0.16	1.31	1.05	0.36	82	83	70	2.91	2	111	0.043	103	105	207.6	1.51	0.84	15.50	111.2	168.0	163.4	56.1	167.3	270	75	74	70	0.049	1.001	6.978	777
1019	162.510	162.114		0.16	0.16	1.31	1.05	0.36	82	83	70	2.93	2	113	0.047	99	99	205.3	2.23	0.76	15.43	112.5	169.3	164.6	56.2	168.6	276	75	74	70	0.054	1.001	6.342	714
1020	162.669	162.273		0.16	0.16	1.30	1.05	0.36	82	83	70	2.93	2	115	0.041	106	106	203.9	1.39	0.82	15.47	113.7	170.6	165.9	56.2	169.9	281	77	75	70	0.047	1.001	6.821	777
1021	162.828	162.432		0.16	0.16	1.30	1.04	0.36	82	83	70	2.95	2	115	0.041	106	106	202.1	1.87	0.84	15.55	115.0	171.9	167.2	56.2	171.2	288	78	76	70	0.053	1.001	6.975	803
1022	162.987	162.590		0.16	0.16	1.30	1.04	0.36	82	83	70	2.95	2	115	0.038	110	109	200.1	1.95	0.83	14.19	116.4	173.2	168.4	56.2	172.5	291	78	77	70	0.050	1.001	6.922	807
1023	163.146	162.748		0.16	0.16	1.30	1.03	0.36	82	83	70	2.97	2	116	0.044	102	102	197.8	2.36	0.80	15.58	117.7	174.6	169.9	56.2	173.9	290	79	78	70	0.052	1.001	6.688	788
1024	163.305	162.905		0.16	0.16	1.30	1.02	0.36	82	83	70	2.97	2	115	0.046	100	99	197.5	0.23	0.76	15.43	119.0	175.9	171.0	56.2	175.2	294	80	78	70	0.050	1.001	6.374	759
1025	163.463	163.063		0.16	0.16	1.29	1.02	0.36	82	83	70	2.98	2	115	0.038	109	109	196.6	0.89	0.85	14.18	120.2	177.1	172.1	56.2	176.4	293	80	79	70	0.051	1.001	7.116	857
1026	163.621	163.220		0.16	0.16	1.28	1.02	0.36	82	83	70	2.99	2	115	0.041	105	105	194.1	2.53	0.83	13.64	121.5	178.5	173.4	56.2	177.7	294	81	79	70	0.051	1.001	6.885	838
1027	163.779	163.376		0.16	0.16	1.28	1.01	0.36	82	83	70	2.99	2	115	0.042	104	103	192.2	1.88	0.84	13.08	122.8	179.7	174.6	56.2	179.0	294	81	80	70	0.057	1.001	6.974	857
1028	163.936	163.533		0.16	0.16	1.29	1.00	0.36	82	83	70	3.01	2	116	0.040	106	106	191.9	0.28	0.82	14.11	124.0	180.9	175.8	56.2	180.2	294	82	80	70	0.056	1.001	6.813	846
1029	164.093	163.688		0.16	0.16	1.29	1.01	0.36	82	83	70	2.99	2	101	0.043	101	100	191.1	0.83	0.82	10.31	124.7	181.5	176.5	56.2	180.9	295	82	81	70	0.049	1.001	6.815	851
1030	164.252	163.844		0.16	0.16	1.28	1.00	0.36	82	83	70	3.00	2	91	0.044	100	98	190.2	0.88	0.80	7.21	125.3	182.1	176.9	56.2	181.6	277	81	80	70	0.039	1.001	6.649	834
1031	164.410	164.000		0.16	0.16	1.28	1.00	0.36	82	83	70	3.00	2	88	0.042	102	100	189.8	0.39	0.80	8.08	125.7	182.4	177.2	56.3	181.9	251	80	79	70	0.039	1.001	6.651	837
1032	164.568	164.156		0.16	0.16	1.27	1.00	0.36	82	83	70	2.98	2	86	0.045	98	97	189.8	0.04	0.82	10.71	126.1	182.8	177.6	56.2	182.3	236	78	78	70	0.037	1.001	6.814	860
1033	164.725	164.312		0.16	0.16	1.28	1.00	0.36	82	83	70	2.99	2	83	0.043	99	99	189.0	0.85	0.82	6.83	126.4	183.1	178.2	56.2	182.6	227	78	77	70	0.036	1.001	6.812	862
1034	164.883	164.470		0.16	0.16	1.28	1.01	0.36	82	83	70	2.98	2	81	0.043	100	100	189.1	-0.11	0.86	7.31	126.7	183.4	178.2	56.2	182.9	220	77	76	70	0.033	1.001	7.135	905
1035	165.042	164.626		0.16	0.16	1.28	1.01	0.36	82	83	70	2.96	2	80	0.046	97	95	188.6	0.45	0.78	6.62	126.9	183.5	178.4	56.2	183.1	215	75	75	70	0.036	1.001	6.493	825
1036	165.200	164.784		0.16	0.16	1.29	1.01	0.36	82	83	70	2.97	2	79	0.041	102	102	188.1	0.47	0.86	9.12	126.9	183.7	178.5	56.2	183.2	211	75	74	70	0.035	1.001	7.137	907
1037	165.360	164.940		0.16	0.16	1.28	1.01	0.36	82	83	70	2.96	2	79	0.042	102	100	188.2	-0.05	0.80	3.05	127.1	183.9	178.6	56.2	183.4	207	75	74	70	0.034	1.001	6.654	847
1038	165.518	165.097		0.16	0.16	1.29	1.01	0.36	82	83	70	2.96	2	78	0.047	95	95	188.2	-0.02	0.80	3.92	127.2	183.9	178.9	56.3	183.4	204	74	73	70	0.034	1.001	6.658	848
1039	165.677	165.254		0.16	0.16	1.28	1.02	0.36	82	83	70	2.96	2	77	0.041	102	101	188.2	-0.01	0.82	3.63	127.4	184.0	178.8	56.2	183.6	201	74	72	70	0.034	1.001	6.815	869
1040	165.836	165.414		0.16	0.16	1.32	1.07	0.36	82	83	70	3.01	2	77	0.045	98	98	188.2	0.06	0.78	2.63	127.4	184.0	178.8	56.2	183.6	199	73	71	70	0.032	1.001	6.489	828
1041	165.996	165.576		0.16	0.16	1.31	1.07	0.36	82	83	70	3.00	2	76	0.043	101	102	188.1	0.04	0.78	5.19	127.4	184.1	178.9	56.2	183.6	198	73	71	70	0.034	1.001	6.490	828
1042	166.157	165.738		0.16	0.16	1.32	1.07	0.36	82	83	70	2.99	2	76	0.042	102	103	187.7	0.40	0.84	4.52	127.3	184.1	179.0	56.3	183.7	197	72	71	70	0.034	1.001	6.973	889
1043	166.318	165.899		0.16	0.16	1.32	1.08	0.36	82	83	70	2.99	2	76	0.043	101	101	188.1	-0.40	0.78	6.50	127.4	184.1	179.0	56.3	183.7	195	71	71	70	0.035	1.001	6.490	828
1044	166.480	166.062		0.16	0.16	1.32	1.08	0.36	82	83	70	2.98	2	76	0.044	101	101	187.3	0.77	0.80	5.16	127.4	184.2	179.0	56.3	183.7	193	71	70	70	0.035	1.001	6.645	848

Elapsed Time	Particulate Sampling Data																Fuel Weight, lb		Flow, gpm		Temperature Data, oF												
	Gas Meter Cubic Feet (1)	Gas Meter Cubic Feet (2)	Gas Meter Cubic Feet (amb)	Sample Rate, cfm (1)	Sample Rate, cfm (2)	Orifice dH (1)	Orifice dH (2)	Orifice dH (amb)	Meter oF (1)	Meter oF (2)	Meter oF (amb)	Meter Vac. In. Hg. (1)	Meter Vac. In. Hg. (2)	Dilution Tunnel Temp.	Dilution Tunnel dP	Pro. Rate (%) (1)	Pro. Rate (%) (2)	Scale Reading	Weight Change	Load Side Liquid Flow Rate	Boiler Side Liquid Flow Rate (optional)	Thermopile ΔT	Boiler to Heat Exch. Temp.	Heat Exch to Boiler Temp.	Inlet Load Temp.	Outlet Load Temp.	Stack	Filter (1)	Filter (2)	Ambient		Specific Heat of Inlet Water (BTU/lb-°F)	Mass Flow Rate of Inlet Water (lb/min)	Heat Output, Btu
1045	166.640	166.224		0.16	0.16	1.32	1.09	0.36	82	83	70	2.98	2	76	0.046	97	98	187.6	-0.25	0.82	2.51	127.6	184.2	179.1	56.2	183.8	191	71	70	70	0.035	1.001	6.806	869
1046	166.801	166.387		0.16	0.16	1.30	1.08	0.36	82	83	70	2.95	2	76	0.046	98	99	187.5	0.10	0.84	2.58	127.7	184.2	179.0	56.1	183.8	189	71	70	70	0.035	1.001	6.977	892
1047	166.961	166.550		0.16	0.16	1.31	1.09	0.36	82	83	70	2.95	2	76	0.044	99	101	188.0	-0.47	0.78	2.66	127.7	184.2	179.0	56.1	183.8	188	71	70	70	0.035	1.001	6.509	832
1048	167.121	166.713		0.16	0.16	1.31	1.09	0.36	82	83	70	2.94	2	76	0.044	99	101	187.3	0.62	0.77	2.64	127.7	184.2	179.0	56.1	183.8	185	71	70	70	0.034	1.001	6.377	815
1049	167.282	166.876		0.16	0.16	1.32	1.09	0.36	82	83	70	2.93	2	76	0.045	99	100	187.2	0.13	0.86	2.45	127.5	184.1	178.9	56.2	183.7	184	71	70	70	0.034	1.001	7.131	911
1050	167.442	167.040		0.16	0.16	1.32	1.10	0.36	82	83	70	2.94	2	76	0.045	98	101	187.4	-0.16	0.80	1.77	127.5	184.1	179.0	56.2	183.7	182	71	70	70	0.034	1.001	6.652	849
1051	167.602	167.204		0.16	0.16	1.31	1.10	0.36	82	83	70	2.93	2	76	0.048	95	98	187.6	-0.20	0.86	2.12	127.5	184.2	179.0	56.2	183.7	181	70	70	70	0.033	1.001	7.138	911
1052	167.763	167.368		0.16	0.16	1.32	1.10	0.36	82	83	70	2.93	2	75	0.044	100	102	187.5	0.09	0.86	3.91	127.6	184.1	179.0	56.2	183.8	178	71	70	70	0.032	1.001	7.139	912
1053	167.924	167.531		0.16	0.16	1.32	1.10	0.36	82	83	70	2.92	2	76	0.043	101	103	187.5	-0.04	0.82	5.73	127.5	184.1	179.0	56.2	183.7	177	70	70	70	0.032	1.001	6.832	872
1054	168.085	167.695		0.16	0.16	1.31	1.10	0.36	82	83	70	2.92	2	75	0.040	105	107	187.6	-0.04	0.80	2.74	127.4	184.0	179.0	56.2	183.6	176	70	70	70	0.031	1.001	6.696	854
1055	168.246	167.860		0.16	0.17	1.31	1.11	0.36	82	83	70	2.93	2	76	0.044	100	103	186.9	0.69	0.76	4.79	127.5	184.0	179.1	56.1	183.7	175	71	70	70	0.031	1.001	6.354	811
1056	168.406	168.024		0.16	0.16	1.31	1.11	0.36	82	83	70	2.92	2	76	0.043	101	103	185.8	1.02	0.72	5.48	127.4	184.0	179.4	56.2	183.6	175	71	70	70	0.030	1.001	6.027	769
1057	168.567	168.190		0.16	0.17	1.32	1.11	0.36	82	83	70	2.91	2	75	0.044	100	103	187.9	-2.05	0.80	4.18	127.3	183.9	178.9	56.2	183.5	173	70	70	70	0.030	1.001	6.679	851
1058	168.728	168.354		0.16	0.16	1.32	1.11	0.36	82	83	70	2.90	2	76	0.043	101	103	186.0	1.87	0.82	7.25	127.2	183.9	178.9	56.2	183.5	170	70	70	70	0.029	1.001	6.837	871
1059	168.889	168.519		0.16	0.16	1.32	1.10	0.36	82	83	70	2.92	2	75	0.043	101	104	187.5	-1.44	0.82	5.22	127.2	183.8	178.9	56.2	183.5	169	70	70	70	0.029	1.001	6.834	870
1060	169.050	168.683		0.16	0.16	1.32	1.11	0.36	82	83	70	2.90	2	75	0.042	102	104	187.2	0.26	0.78	4.75	127.2	183.9	178.9	56.2	183.5	167	70	70	70	0.029	1.001	6.509	829
1061	169.211	168.848		0.16	0.17	1.32	1.11	0.36	82	83	70	2.89	2	75	0.043	101	104	187.1	0.14	0.78	4.87	127.2	183.8	178.8	56.2	183.4	166	70	70	70	0.028	1.001	6.509	829
1062	169.372	169.013		0.16	0.16	1.33	1.11	0.36	82	83	70	2.89	2	75	0.038	107	110	187.4	-0.37	0.78	7.76	127.0	183.7	178.7	56.2	183.3	167	70	70	70	0.028	1.001	6.514	828
1063	169.534	169.178		0.16	0.16	1.33	1.11	0.36	82	83	70	2.89	2	75	0.042	103	105	186.5	0.97	0.80	7.78	127.0	183.7	178.8	56.2	183.3	165	70	70	70	0.027	1.001	6.674	849
1064	169.695	169.342		0.16	0.16	1.33	1.11	0.36	82	83	70	2.90	2	75	0.043	101	103	187.2	-0.71	0.82	7.74	126.9	183.6	178.6	56.2	183.2	165	70	70	70	0.027	1.001	6.837	869
1065	169.856	169.506		0.16	0.16	1.32	1.06	0.36	83	83	70	2.87	2	75	0.043	101	103	187.3	-0.09	0.80	3.90	126.9	183.6	178.6	56.3	183.2	163	71	71	70	0.027	1.001	6.681	849
1066	170.016	169.666		0.16	0.16	1.31	1.06	0.36	82	83	70	2.87	2	75	0.043	100	101	187.0	0.31	0.76	5.96	126.9	183.6	178.5	56.3	183.2	164	71	71	70	0.027	1.001	6.355	808
1067	170.176	169.827		0.16	0.16	1.31	1.05	0.36	82	83	70	2.86	2	76	0.041	103	104	186.5	0.45	0.80	6.40	126.8	183.4	178.4	56.2	183.1	162	71	70	70	0.027	1.001	6.675	848
1068	170.336	169.988		0.16	0.16	1.31	1.05	0.36	82	83	70	2.86	2	75	0.043	100	101	187.0	-0.48	0.80	5.21	126.8	183.4	178.4	56.3	183.0	164	71	70	70	0.026	1.001	6.676	847
1069	170.496	170.148		0.16	0.16	1.30	1.05	0.36	82	83	70	2.87	2	75	0.044	99	99	187.3	-0.32	0.80	4.89	126.6	183.3	178.3	56.3	182.9	163	71	70	70	0.026	1.001	6.671	846
1070	170.656	170.308		0.16	0.16	1.30	1.06	0.36	82	83	70	2.87	2	75	0.043	100	101	186.9	0.37	0.80	10.25	126.6	183.3	178.2	56.3	182.9	159	71	70	70	0.026	1.001	6.673	846
1071	170.816	170.469		0.16	0.16	1.31	1.06	0.36	82	83	70	2.86	2	75	0.044	99	100	186.2	0.70	0.80	7.82	126.6	183.2	178.2	56.3	182.8	161	71	71	70	0.025	1.001	6.671	845
1072	170.976	170.630		0.16	0.16	1.31	1.06	0.36	82	83	70	2.86	2	75	0.042	102	102	187.2	-0.92	0.84	6.52	126.5	183.1	178.2	56.3	182.7	159	71	71	70	0.025	1.001	6.999	886
1073	171.136	170.791		0.16	0.16	1.31	1.06	0.36	83	83	70	2.86	2	75	0.047	96	97	187.7	-0.52	0.74	9.03	126.4	183.1	178.1	56.3	182.7	162	71	71	70	0.025	1.001	6.188	783
1074	171.297	170.951		0.16	0.16	1.30	1.05	0.36	82	83	70	2.85	2	75	0.044	100	99	187.2	0.50	0.84	6.02	126.4	183.0	178.0	56.2	182.7	156	71	71	70	0.025	1.001	6.991	885
1075	171.456	171.112		0.16	0.16	1.31	1.05	0.36	82	83	70	2.87	2	75	0.045	98	99	187.1	0.10	0.72	5.56	126.3	182.9	177.9	56.3	182.5	157	71	71	70	0.025	1.001	6.025	762
1076	171.617	171.272		0.16	0.16	1.31	1.06	0.36	83	83	70	2.87	2	75	0.045	99	98	186.1	1.02	0.82	3.92	126.2	183.0	178.0	56.3	182.5	156	71	71	70	0.025	1.001	6.834	864
1077	171.777	171.433		0.16	0.16	1.31	1.06	0.36	83	83	70	2.87	2	75	0.045	98	99	186.9	-0.87	0.78	6.66	126.2	182.8	177.9	56.2	182.4	156	71	71	70	0.024	1.001	6.510	823
1078	171.938	171.595		0.16	0.16	1.31	1.05	0.36	83	83	70	2.87	2	75	0.044	100	101	187.0	-0.03	0.81	7.19	126.1	182.7	177.7	56.2	182.3	156	71	71	70	0.024	1.001	6.762	854
1079	172.098	171.755		0.16	0.16	1.31	1.05	0.36	83	83	70	2.87	2	75	0.047	96	96	187.1	-0.09	0.76	10.36	126.1	182.6	177.6	56.2	182.2	152	71	71	70	0.023	1.001	6.337	800
1080	172.258	171.915		0.16	0.16	1.30	1.06	0.36	83	83	70	2.86	2	75	0.043	100	101	187.4	-0.32	0.83	9.07	125.9	182.5	177.5	56.1	182.1	156	71	71	70	0.023	1.001	6.915	872
1081	172.418	172.076		0.16	0.16	1.30	1.06	0.36	83	83	70	2.86	2	75	0.043	100	101	187.1	0.25	0.78	7.75	126.0	182.5	177.6	56.1	182.1	156	71	71	70	0.023	1.001	6.490	819
1082	172.578	172.237		0.16	0.16	1.30	1.05	0.36	83	83	70	2.86	2	75	0.042	101	102	187.3	-0.15	0.83	5.22	125.9	182.4	177.4	56.1	182.0	154	71	71	70	0.022	1.001	6.951	876
1083	172.738	172.397		0.16	0.16	1.30	1.06	0.36	83	83	70	2.87	2	75	0.047	96	96	187.1	0.20	0.82	7.80	125.8	182.3	177.4	56.1	181.9	152	71	71	70	0.023	1.001	6.832	861
1084	172.897	172.557		0.16	0.16	1.30	1.06	0.36	83	83	70	2.86	2	75	0.047	95	96	187.3	-0.19	0.78	7.85	125.7	182.2	177.2	56.1	181.8	152	71	71	70	0.022	1.001	6.522	821
1085	173.057	172.719		0.16	0.16	1.31	1.05	0.36	83	83	70	2.87	2	75	0.044	99	101	186.4	0.85	0.84	9.00	125.6	182.0	176.9	56.1	181.6	152	71	71	70	0.022	1.001	6.995	879
1086	173.217	172.879		0.16	0.16	1.31	1.06	0.36	83	83	70	2.86	2	75	0.043	100	101	186.1	0.28	0.78	10.42	125.5	181.9	176.8	56.1	181.6	152	71	71	70	0.022	1.001	6.511	818
1087	173.377	173.040		0.16	0.16	1.31	1.06	0.36	83	83	70	2.87	2	75	0.042	101	102	187.4	-1.30	0.84	6.43	125.4	181.9	176.8	56.1	181.5	148	71	71	70	0.021	1.001	6.994	878
1088	173.537	173.201		0.16	0.16	1.31	1.05	0.36	83	83	70	2.86	2	75	0.041	103	104	186.5	0.95	0.86	5.30	125.4	181.8	176.7	56.0	181.4	152	71	71	70	0.021	1.001	7.158	898
1089	173.697	173.361		0.16	0.16	1.31	1.05	0.36	83	83	70	2.86	2	75	0.043	100	101	186.9	-0.40	0.86	11.61	125.3	181.7	176.5	56.0	181.3	150	71	71	70	0.022	1.001	7.156	898
1090	173.857	173.521		0.16	0.16	1.31	1.05	0.36	83	83	70	2.87	2	75	0.044	99	99	186.9	-0.05	0.84	9.04	125.2	181.6	176.4	56.0	181.2	147	71	71	70	0.021	1.001	7.002	878
1091	174.018	173.682		0.16	0.16	1.31	1.06	0.36	83	83	70	2.86	2	75	0.042	102	102	186.7	0.29	0.78	7.73	125.1	181.5	176.3	56.0	181.1	146	71	71	70	0.021	1.001	6.511	815
1092	174.178	173.843		0.16	0.16	1.31	1.05	0.36	83	83	70	2.87	2	75	0.042	101	102	187.2	-0.51	0.84	11.57	125.0	181.3	176.2	56.0	181.0	148	71	71	70	0.021	1.001	6.998	876
1093	174.338	174.003		0.16	0.16	1.30	1.06	0.36	83	83	70	2.85	2	75	0.040	104	104	186.4	0.80	0.84	8.35	124.9	181.3	176.1	56.0	180.9	150	71	71	70	0.020	1.001	7.001	875
1094	174.499	174.164		0.16	0.16	1.31	1.06	0.36	83	83	70	2.86	2	75	0.042	102	102	187.1	-0.72	0.84	10.31	124.8	181.2	176.1	56.0	180.8	144	71	71	70	0.021	1.001	6.996	874
1095	174.659	174.325		0.16	0.16	1.31	1.06	0.36	83	83	70	2.87	2	75	0.043	100	101	186.5	0.61	0.80	2.44	124.6	181.0	175.9	56.0	180.7	146	71	71	70	0.020	1.001	6.675	833
1096	174.819	174.485		0.16	0.16	1.31	1.06	0.36	83	83	70	2.87	2	75	0.044	99	99	187.1	-0.58	0.84	8.37	124.5	180.9	175.9	56.1	180.5	147	71	71	70	0.020	1.001	7.004	873
1097	174.979	174.646		0.16	0.16	1.30	1.06	0.36	83	83	70	2.86	2	75	0.045	98	99	186.7	0.30	0.80	7.74	124.5	180.8	175.8	56.1	180.5	145	71	71	70	0.020	1.001	6.677	832
1098	175.139	174.808		0.16	0.16	1.31	1.06	0.36	83	83	70	2.86	2	75	0.044	99	101	186.4	0.35	0.78	11.39	124.3	180.7	175.6	56.1	180.3	145	71	71	70	0.020	1.001	6.508	810
1099	175.299	174.968		0.16	0.16	1.30	1.04	0.36	83	83	70	2.88	2	80	0.043	101	101	186.6	-0.24	0.78	6.45	124.1	180.5	175.5	56.1	180.2	144	71	71	70	0.020	1.001	6.518	810
1100	175.458	175.127		0.16	0.16	1.30	1.04	0.36	83	83	70	2.89	2	79	0.042	101	101	186.1	0.53	0.80	14.17	123.9	180.4	175.3	56.1	180.0	161	71	71	70	0.041	1.001	6.673	828
1101	175.618	175.288		0.16	0.16	1.30	1.05	0.36	83	83	70	2.88	2	75	0.043	100	101	185.7	0.45	0.86	7.87	123.9	180.4	175.3	56.1	180.0	153	72	72	70	0.027	1.001	7.160	888
1102	175.777	175.448		0.16	0.16	1.31	1.06	0.36	83	83	70	2.86	2	75	0.043	100	101	185.7	-0.07	0.84	7.32	123.9	180.4	175.5	56.1	179.9	151	71	70	70	0.025	1.001	6.995	868
1103	175.937	175.608		0.16	0.16	1.31	1.06	0.36	83	83	70	2.87	2	75	0.043	100	101	185.9	-0.16	0.72	6.73	123.8	180.3	175.1	56.1	179.9	148	71	70	70	0.023	1.001	6.026	747
1104	176.098	175.769		0.16	0.16	1.31	1.06	0.36	83	83	70	2.85	2	75	0.044	100	100	185.9	-0.04	0.80	10.26	123.6	180.1	174.9	56.1	179.7	147	71	71	70	0.022	1.001	6.675	826
1105	176.258	175.930		0.16	0.16	1.31	1.06	0.36	83	83	70	2.87	2	75	0.044	99	100	186.0	-0.10	0.80	11.58	123.5	180.0	174.8	56.1	179.6	145	71	71	70	0.021	1.001	6.644	822
1106	176.418	176.091		0.16	0.16	1.31	1.06	0.36	83	83	70	2.86	2	75	0.045	98	99	186.1	-0.11	0.80	10.35	123.4	179.8	174.7	56.1	179.5	145	71	71	70	0.021	1.001	6.697	827

Elapsed Time	Particulate Sampling Data																Fuel Weight, lb		Flow, gpm		Temperature Data, oF												
	Gas Meter Cubic Feet (1)	Gas Meter Cubic Feet (2)	Gas Meter Cubic Feet (amb)	Sample Rate, cfm (1)	Sample Rate, cfm (2)	Orifice dH (1)	Orifice dH (2)	Orifice dH (amb)	Meter oF (1)	Meter oF (2)	Meter oF (amb)	Meter Vac. In. Hg. (1)	Meter Vac. In. Hg. (2)	Dilution Tunnel Temp.	Dilution Tunnel dP	Pro. Rate (%) (1)	Pro. Rate (%) (2)	Scale Reading	Weight Change	Load Side Liquid Flow Rate	Boiler Side Liquid Flow Rate (optional)	Thermopile ΔT	Boiler to Heat Exch. Temp.	Heat Exch to Boiler Temp.	Inlet Load Temp.	Outlet Load Temp.	Stack	Filter (1)	Filter (2)	Ambient		Specific Heat of Inlet Water (BTU/lb-°F)	Mass Flow Rate of Inlet Water (lb/min)	Heat Output, Btu
1107	176.578	176.252		0.16	0.16	1.31	1.05	0.36	83	83	70	2.87	2	75	0.040	104	105	185.8	0.37	0.79	12.88	123.3	179.8	174.6	56.1	179.4	142	71	71	70	0.020	1.001	6.544	808
1108	176.739	176.413		0.16	0.16	1.31	1.06	0.36	83	83	70	2.86	2	75	0.045	99	99	185.5	0.27	0.84	10.56	123.2	179.7	174.6	56.2	179.4	140	71	71	70	0.019	1.001	6.997	863
1109	176.899	176.573		0.16	0.16	1.31	1.06	0.36	83	83	70	2.86	2	75	0.039	105	106	186.0	-0.48	0.82	6.49	123.0	179.6	174.7	56.2	179.2	140	71	71	70	0.019	1.001	6.833	842
1110	177.060	176.734		0.16	0.16	1.30	1.06	0.36	83	83	70	2.85	2	75	0.043	101	101	186.1	-0.15	0.85	9.34	123.0	179.5	174.4	56.1	179.1	139	71	71	70	0.019	1.001	7.107	875
1111	177.219	176.895		0.16	0.16	1.30	1.06	0.36	83	83	70	2.87	2	75	0.044	98	100	185.6	0.53	0.86	9.53	122.9	179.3	174.3	56.1	179.0	139	71	71	70	0.019	1.001	7.158	880
1112	177.380	177.056		0.16	0.16	1.30	1.05	0.36	83	83	70	2.86	2	75	0.046	98	98	186.6	-0.98	0.73	8.97	122.8	179.2	174.2	56.2	178.9	139	71	71	70	0.018	1.001	6.045	743
1113	177.540	177.216		0.16	0.16	1.30	1.06	0.36	83	83	70	2.85	2	75	0.041	103	103	186.2	0.39	0.83	9.03	122.6	179.1	174.0	56.1	178.8	136	71	71	70	0.018	1.001	6.923	850
1114	177.700	177.377		0.16	0.16	1.30	1.06	0.36	83	83	70	2.86	2	75	0.043	100	101	186.1	0.11	0.88	7.99	122.5	179.0	174.0	56.1	178.7	136	71	71	70	0.017	1.001	7.321	898
1115	177.859	177.538		0.16	0.16	1.31	1.06	0.36	83	83	70	2.86	2	75	0.038	106	108	186.5	-0.41	0.70	9.19	122.4	178.9	173.9	56.2	178.5	136	71	71	70	0.017	1.001	5.859	718
1116	178.020	177.699		0.16	0.16	1.31	1.05	0.36	83	83	70	2.85	2	75	0.044	100	100	185.8	0.73	0.72	5.39	122.2	178.8	173.8	56.2	178.4	135	71	71	70	0.017	1.001	6.023	737
1117	178.180	177.860		0.16	0.16	1.31	1.06	0.36	83	83	70	2.86	2	75	0.045	98	99	186.2	-0.40	0.80	11.69	122.1	178.7	173.7	56.2	178.3	134	71	71	70	0.017	1.001	6.671	816
1118	178.340	178.021		0.16	0.16	1.31	1.06	0.36	83	83	70	2.85	2	75	0.044	99	100	186.1	0.10	0.84	8.37	122.0	178.6	173.6	56.2	178.2	133	71	71	70	0.017	1.001	7.002	855
1119	178.500	178.181		0.16	0.16	1.31	1.06	0.36	83	83	70	2.86	2	75	0.043	100	101	186.0	0.11	0.78	8.53	121.9	178.4	173.7	56.2	178.1	132	71	71	70	0.017	1.001	6.513	795
1120	178.660	178.342		0.16	0.16	1.31	1.06	0.36	83	83	70	2.86	2	75	0.043	100	101	185.9	0.10	0.82	11.59	121.9	178.4	173.5	56.2	178.0	133	71	71	70	0.016	1.001	6.832	833
1121	178.820	178.503		0.16	0.16	1.31	1.06	0.36	83	83	70	2.87	2	75	0.044	99	100	185.9	-0.04	0.76	10.62	121.6	178.2	173.2	56.2	177.8	132	71	71	70	0.016	1.001	6.347	773
1122	178.980	178.664		0.16	0.16	1.31	1.06	0.36	83	83	70	2.85	2	75	0.043	100	101	186.5	-0.62	0.80	11.57	121.5	178.1	173.5	56.2	177.7	129	71	71	70	0.016	1.001	6.679	813
1123	179.141	178.825		0.16	0.16	1.31	1.06	0.36	83	83	70	2.86	2	75	0.044	100	100	186.1	0.44	0.78	11.61	121.5	178.0	173.3	56.2	177.7	128	71	71	70	0.016	1.001	6.517	793
1124	179.301	178.985		0.16	0.16	1.31	1.05	0.36	83	83	70	2.87	2	75	0.048	95	95	186.1	0.05	0.86	12.96	121.4	178.0	173.1	56.2	177.6	128	71	71	70	0.016	1.001	7.159	870
1125	179.462	179.147		0.16	0.16	1.31	1.06	0.36	83	83	70	2.85	2	75	0.043	101	102	186.2	-0.15	0.84	12.95	121.2	177.8	172.9	56.3	177.4	128	71	71	70	0.015	1.001	6.997	849
1126	179.622	179.307		0.16	0.16	1.30	1.06	0.36	83	83	70	2.87	2	75	0.046	97	97	186.1	0.10	0.80	10.37	121.1	177.7	172.9	56.3	177.3	129	71	71	70	0.015	1.001	6.670	808
1127	179.782	179.468		0.16	0.16	1.31	1.06	0.36	83	83	70	2.87	2	75	0.047	96	97	186.0	0.09	0.80	7.71	120.9	177.5	172.6	56.3	177.1	127	71	71	70	0.015	1.001	6.671	807
1128	179.942	179.629		0.16	0.16	1.31	1.06	0.36	83	83	70	2.86	2	75	0.044	99	100	185.9	0.07	0.80	10.81	120.8	177.4	172.8	56.3	177.0	128	71	71	70	0.015	1.001	6.652	804
1129	180.103	179.790		0.16	0.16	1.31	1.05	0.36	83	83	70	2.86	2	75	0.041	103	104	185.6	0.38	0.78	12.81	120.6	177.3	172.5	56.3	176.9	128	71	71	70	0.015	1.001	6.489	784
1130	180.263	179.951		0.16	0.16	1.30	1.05	0.36	83	83	70	2.89	2	82	0.043	101	102	185.9	-0.29	0.78	12.53	120.4	177.1	172.2	56.3	176.7	127	71	71	70	0.015	1.001	6.494	783
1131	180.422	180.110		0.16	0.16	1.30	1.05	0.36	83	83	70	2.87	2	78	0.046	97	97	185.5	0.30	0.86	10.73	120.3	177.0	172.1	56.3	176.6	155	71	71	70	0.041	1.001	7.134	859
1132	180.582	180.271		0.16	0.16	1.31	1.06	0.36	83	83	70	2.87	2	75	0.045	98	99	185.6	-0.01	0.80	12.93	120.3	176.9	172.0	56.3	176.6	147	72	71	70	0.022	1.001	6.656	802
1133	180.742	180.432		0.16	0.16	1.30	1.06	0.36	83	83	70	2.87	2	75	0.045	98	99	185.5	0.01	0.80	11.63	120.2	176.9	172.0	56.3	176.5	143	71	70	70	0.020	1.001	6.662	802
1134	180.902	180.593		0.16	0.16	1.30	1.06	0.36	83	83	70	2.87	2	75	0.044	99	100	185.9	-0.38	0.87	12.83	120.1	176.8	171.9	56.3	176.4	140	71	71	70	0.019	1.001	7.287	876
1135	181.062	180.754		0.16	0.16	1.31	1.06	0.36	83	83	70	2.86	2	75	0.045	98	99	185.5	0.40	0.82	10.42	120.0	176.6	171.8	56.3	176.3	137	71	71	70	0.019	1.001	6.816	819
1136	181.222	180.914		0.16	0.16	1.31	1.06	0.36	83	83	70	2.87	2	75	0.041	103	103	185.4	0.15	0.76	11.66	119.9	176.5	171.6	56.3	176.1	137	71	71	70	0.017	1.001	6.333	760
1137	181.383	181.075		0.16	0.16	1.30	1.06	0.36	83	83	70	2.86	2	75	0.045	99	99	185.6	-0.24	0.85	12.92	119.7	176.4	171.5	56.2	176.0	133	71	71	70	0.017	1.001	7.067	847
1138	181.543	181.236		0.16	0.16	1.31	1.06	0.36	83	83	70	2.85	2	75	0.048	95	96	185.4	0.18	0.85	12.87	119.7	176.3	171.3	56.3	175.9	132	71	71	70	0.016	1.001	7.099	851
1139	181.703	181.397		0.16	0.16	1.31	1.06	0.36	83	83	70	2.86	2	74	0.040	104	105	185.0	0.49	0.79	14.34	119.4	176.1	171.1	56.3	175.7	132	71	71	70	0.016	1.001	6.606	790
1140	181.863	181.557		0.16	0.16	1.31	1.06	0.36	83	83	70	2.86	2	75	0.046	97	97	185.8	-0.83	0.79	12.94	119.4	175.9	171.0	56.2	175.7	130	71	71	70	0.016	1.001	6.591	788
1141	182.024	181.718		0.16	0.16	1.31	1.06	0.36	83	83	70	2.87	2	75	0.045	99	99	185.6	0.22	0.82	12.92	119.3	175.9	170.8	56.3	175.5	129	71	71	70	0.015	1.001	6.819	814
1142	182.184	181.880		0.16	0.16	1.31	1.06	0.36	83	83	70	2.85	2	75	0.043	100	102	185.5	0.09	0.79	13.09	119.2	175.8	170.8	56.2	175.4	128	71	71	70	0.016	1.001	6.625	791
1143	182.344	182.040		0.16	0.16	1.31	1.06	0.36	83	83	70	2.87	2	75	0.044	99	99	186.0	-0.49	0.80	12.99	119.0	175.6	170.8	56.3	175.3	127	71	71	70	0.015	1.001	6.661	794
1144	182.504	182.201		0.16	0.16	1.31	1.06	0.36	83	83	70	2.86	2	75	0.045	98	99	186.0	-0.08	0.88	14.23	118.8	175.4	170.6	56.3	175.1	126	71	71	70	0.015	1.001	7.298	868
1145	182.665	182.362		0.16	0.16	1.31	1.05	0.36	83	83	70	2.85	2	75	0.048	95	96	185.5	0.58	0.82	12.44	118.8	175.3	170.5	56.3	175.0	125	71	71	70	0.014	1.001	6.818	811
1146	182.825	182.523		0.16	0.16	1.30	1.05	0.36	83	83	70	2.86	2	75	0.046	97	98	186.1	-0.69	0.84	14.27	118.6	175.2	170.4	56.3	174.9	126	71	71	70	0.015	1.001	6.975	828
1147	182.984	182.683		0.16	0.16	1.30	1.06	0.36	83	83	70	2.86	2	75	0.042	101	102	186.1	0.01	0.82	11.89	118.6	175.1	170.3	56.2	174.8	126	71	71	70	0.014	1.001	6.813	809
1148	183.144	182.844		0.16	0.16	1.31	1.06	0.36	83	83	70	2.85	2	75	0.046	97	98	185.4	0.74	0.82	15.53	118.5	174.9	170.2	56.2	174.6	124	71	71	70	0.014	1.001	6.815	808
1149	183.305	183.005		0.16	0.16	1.31	1.06	0.36	83	83	70	2.85	2	75	0.044	100	100	185.4	-0.02	0.88	14.23	118.3	174.9	170.0	56.2	174.5	123	71	71	70	0.014	1.001	7.300	865
1150	183.465	183.166		0.16	0.16	1.31	1.06	0.36	83	83	70	2.86	2	75	0.044	99	100	185.7	-0.33	0.84	15.32	118.2	174.7	169.9	56.2	174.4	123	71	71	70	0.014	1.001	6.975	825
1151	183.625	183.327		0.16	0.16	1.31	1.06	0.36	83	83	70	2.87	2	75	0.039	105	106	185.8	-0.10	0.86	13.74	118.1	174.7	169.8	56.2	174.3	123	71	71	70	0.014	1.001	7.135	844
1152	183.785	183.488		0.16	0.16	1.31	1.06	0.36	83	83	70	2.87	2	75	0.041	103	104	185.6	0.27	0.84	14.13	118.0	174.6	169.7	56.2	174.2	122	71	71	70	0.015	1.001	6.977	825
1153	183.945	183.649		0.16	0.16	1.32	1.06	0.36	83	83	70	2.87	2	75	0.042	101	102	185.7	-0.16	0.82	15.44	117.9	174.4	169.6	56.2	174.1	123	71	71	70	0.013	1.001	6.813	804
1154	184.106	183.809		0.16	0.16	1.31	1.06	0.36	83	83	70	2.86	2	75	0.044	100	99	185.6	0.08	0.82	10.37	117.8	174.2	169.5	56.2	173.9	120	71	71	70	0.013	1.001	6.815	804
1155	184.266	183.970		0.16	0.16	1.31	1.06	0.36	83	83	70	2.87	2	75	0.040	104	105	185.5	0.12	0.78	12.82	117.6	174.1	169.3	56.1	173.7	121	71	71	70	0.014	1.001	6.490	764
1156	184.426	184.132		0.16	0.16	1.31	1.06	0.36	83	83	70	2.86	2	75	0.042	101	103	185.6	-0.10	0.82	15.56	117.5	174.0	169.2	56.1	173.6	119	71	71	70	0.013	1.001	6.816	802
1157	184.587	184.292		0.16	0.16	1.31	1.06	0.36	83	83	70	2.85	2	75	0.046	98	97	185.6	-0.01	0.80	15.50	117.4	173.9	169.1	56.1	173.5	121	71	71	70	0.013	1.001	6.651	782
1158	184.747	184.453		0.16	0.16	1.31	1.06	0.36	83	83	70	2.87	2	75	0.041	103	104	185.4	0.20	0.80	14.21	117.3	173.8	169.1	56.1	173.4	120	71	71	70	0.013	1.001	6.652	781
1159	184.908	184.615		0.16	0.16	1.30	1.06	0.36	83	83	70	2.87	2	75	0.044	100	101	185.3	0.18	0.80	15.49	117.2	173.6	168.9	56.1	173.3	119	71	71	70	0.013	1.001	6.651	780
1160	185.068	184.775		0.16	0.16	1.31	1.05	0.36	83	83	70	2.86	2	75	0.041	103	103	185.1	0.16	0.82	14.22	117.0	173.5	168.8	56.1	173.2	117	71	71	70	0.013	1.001	6.816	799
1161	185.228	184.936		0.16	0.16	1.30	1.05	0.36	83	83	70	2.89	2	81	0.040	105	105	185.5	-0.40	0.84	15.54	116.9	173.3	168.7	56.1	173.0	118	71	71	70	0.012	1.001	6.975	816
1162	185.388	185.096		0.16	0.16	1.30	1.05	0.36	83	83	70	2.87	2	77	0.045	98	98	185.2	0.25	0.82	13.13	116.7	173.2	168.6	56.1	172.9	153	71	71	70	0.036	1.001	6.813	796
1163	185.548	185.257		0.16	0.16	1.31	1.05	0.36	83	83	70	2.85	2	75	0.043	100	101	185.3	-0.04	0.84	14.26	116.7	173.2	168.5	56.1	172.8	139	71	71	70	0.019	1.001	6.977	815
1164	185.708	185.418		0.16	0.16	1.31	1.06	0.36	83	83	70	2.86	2	75	0.042	101	102	184.8	0.50	0.82	15.58	116.6	173.0	168.4	56.1	172.7	136	71	70	70	0.018	1.001	6.816	796
1165	185.868	185.578		0.16	0.16	1.31	1.06	0.36	83	83	70	2.86	2	75	0.044	99	99	185.0	-0.22	0.80	14.47	116.4	172.9	168.2	56.2	172.6	133	71	71	70	0.017	1.001	6.653	776
1166	186.028	185.740		0.16	0.16	1.31	1.06	0.36	83	83	70	2.86	2	75	0.045	98	99	185.5	-0.51	0.81	12.97	116.4	172.8	168.1	56.2	172.5	132	71	71	70	0.017	1.001	6.778	790
1167	186.189	185.901		0.16	0.16	1.31	1.06	0.36	83	83	70	2.86	2	74	0.043	101	101	185.5	0.01	0.83	15.44	116.1	172.7	168.0	56.1	172.3	129	71	71	70	0.016	1.001	6.933	806
1168	186.349	186.062		0.16	0.16	1.31	1.06	0.36	83	83	70	2.87	2	75	0.045	98	99	185.6	-0.07	0.84	15.50	116.0	172.6	168.0	56.2	172.2	128	71	71	70	0.015	1.001	6.980	811

Elapsed Time	Particulate Sampling Data																Fuel Weight, lb		Flow, gpm		Temperature Data, oF												
	Gas Meter Cubic Feet (1)	Gas Meter Cubic Feet (2)	Gas Meter Cubic Feet (amb)	Sample Rate, cfm (1)	Sample Rate, cfm (2)	Orifice dH (1)	Orifice dH (2)	Orifice dH (amb)	Meter oF (1)	Meter oF (2)	Meter oF (amb)	Meter Vac. In. Hg. (1)	Meter Vac. In. Hg. (2)	Dilution Tunnel Temp.	Dilution Tunnel dP	Pro. Rate (%) (1)	Pro. Rate (%) (2)	Scale Reading	Weight Change	Load Side Liquid Flow Rate	Boiler Side Liquid Flow Rate (optional)	Thermopile ΔT	Boiler to Heat Exch. Temp.	Heat Exch to Boiler Temp.	Inlet Load Temp.	Outlet Load Temp.	Stack	Filter (1)	Filter (2)	Ambient		Specific Heat of Inlet Water (BTU/lb-°F)	Mass Flow Rate of Inlet Water (lb/min)	Heat Output, Btu
1169	186.509	186.223		0.16	0.16	1.31	1.06	0.36	83	83	70	2.87	2	75	0.045	98	99	185.0	0.54	0.78	15.50	115.9	172.4	167.8	56.2	172.1	126	71	71	70	0.015	1.001	6.472	751
1170	186.669	186.384		0.16	0.16	1.32	1.06	0.36	83	83	70	2.87	2	75	0.041	103	104	185.8	-0.76	0.86	15.53	115.7	172.3	167.7	56.2	172.0	124	71	71	70	0.014	1.001	7.172	831
1171	186.829	186.544		0.16	0.16	1.31	1.06	0.36	83	83	70	2.86	2	75	0.045	98	98	185.4	0.41	0.84	14.16	115.6	172.1	167.5	56.2	171.8	124	71	71	70	0.014	1.001	6.980	808
1172	186.990	186.705		0.16	0.16	1.31	1.06	0.36	83	83	70	2.86	2	75	0.044	100	100	185.3	0.05	0.80	14.20	115.6	172.0	167.4	56.2	171.8	123	71	71	70	0.014	1.001	6.695	775
1173	187.150	186.867		0.16	0.16	1.31	1.06	0.36	83	83	70	2.86	2	75	0.045	98	99	185.6	-0.27	0.82	14.22	115.5	171.9	167.3	56.1	171.6	122	71	71	70	0.014	1.001	6.819	788
1174	187.310	187.027		0.16	0.16	1.31	1.06	0.36	83	83	70	2.86	2	75	0.044	99	99	186.0	-0.39	0.84	15.52	115.3	171.8	167.2	56.1	171.4	121	71	71	70	0.014	1.001	6.980	806
1175	187.471	187.188		0.16	0.16	1.30	1.06	0.36	83	83	70	2.86	2	75	0.046	98	98	185.8	0.24	0.82	15.46	115.1	171.6	167.0	56.1	171.3	121	71	71	70	0.013	1.001	6.815	786
1176	187.632	187.350		0.16	0.16	1.31	1.06	0.36	83	83	70	2.86	2	75	0.045	99	99	185.3	0.40	0.82	15.58	115.1	171.5	166.9	56.1	171.2	120	71	71	70	0.013	1.001	6.811	785
1177	187.792	187.510		0.16	0.16	1.31	1.06	0.36	83	83	70	2.86	2	75	0.045	98	98	185.1	0.25	0.84	15.52	114.9	171.4	166.7	56.2	171.0	119	71	71	70	0.012	1.001	6.980	803
1178	187.952	187.671		0.16	0.16	1.32	1.06	0.36	83	83	71	2.86	2	75	0.045	98	99	184.9	0.17	0.76	14.27	114.8	171.3	166.6	56.1	170.9	118	71	71	71	0.012	1.001	6.327	727
1179	188.112	187.832		0.16	0.16	1.31	1.06	0.36	83	83	71	2.86	2	75	0.043	100	101	185.3	-0.32	0.82	15.42	114.6	171.1	166.7	56.1	170.7	118	71	71	71	0.013	1.001	6.811	782
1180	188.273	187.993		0.16	0.16	1.31	1.06	0.36	83	83	70	2.85	2	75	0.045	99	99	185.4	-0.12	0.80	15.47	114.5	171.0	166.4	56.2	170.6	117	71	71	70	0.012	1.001	6.652	763
1181	188.433	188.154		0.16	0.16	1.31	1.06	0.36	83	83	71	2.86	2	75	0.043	100	101	185.4	0.01	0.88	15.54	114.3	170.8	166.2	56.2	170.5	119	71	71	71	0.012	1.001	7.300	836
1182	188.593	188.315		0.16	0.16	1.31	1.06	0.36	83	83	71	2.86	2	75	0.045	98	99	185.5	-0.19	0.82	15.44	114.1	170.7	166.1	56.2	170.3	118	71	71	71	0.012	1.001	6.816	779
1183	188.753	188.476		0.16	0.16	1.31	1.06	0.36	83	83	70	2.85	2	75	0.040	104	105	185.7	-0.15	0.82	15.47	114.1	170.6	166.0	56.2	170.3	118	71	71	70	0.012	1.001	6.813	779
1184	188.913	188.637		0.16	0.16	1.31	1.06	0.36	83	83	70	2.87	2	75	0.041	103	104	184.6	1.07	0.78	15.46	114.0	170.5	165.8	56.2	170.1	117	71	71	70	0.012	1.001	6.492	741
1185	189.074	188.797		0.16	0.16	1.31	1.06	0.36	83	83	70	2.86	2	75	0.043	101	101	185.7	-1.09	0.84	15.51	113.8	170.2	165.6	56.2	169.9	115	71	71	70	0.011	1.001	6.979	795
1186	189.234	188.959		0.16	0.16	1.31	1.06	0.36	83	83	70	2.86	2	75	0.043	100	102	185.7	0.04	0.86	15.56	113.7	170.2	165.6	56.2	169.8	117	71	71	70	0.011	1.001	7.141	813
1187	189.394	189.120		0.16	0.16	1.31	1.06	0.36	83	83	70	2.86	2	75	0.042	101	102	185.5	0.13	0.82	14.27	113.6	170.0	165.4	56.2	169.8	118	71	71	70	0.011	1.001	6.819	775
1188	189.554	189.280		0.16	0.16	1.32	1.06	0.36	83	83	70	2.85	2	75	0.041	103	103	185.9	-0.32	0.82	15.49	113.4	169.9	165.4	56.2	169.6	115	71	71	70	0.012	1.001	6.816	774
1189	189.715	189.441		0.16	0.16	1.31	1.06	0.36	83	83	70	2.86	2	75	0.044	100	100	185.3	0.61	0.78	14.29	113.3	169.8	165.2	56.2	169.5	114	71	71	70	0.012	1.001	6.492	736
1190	189.875	189.603		0.16	0.16	1.31	1.06	0.36	83	83	70	2.85	2	75	0.039	105	107	185.2	0.03	0.84	15.56	113.2	169.6	165.1	56.2	169.4	115	71	71	70	0.012	1.001	6.981	791
1191	190.035	189.764		0.16	0.16	1.31	1.06	0.36	83	83	70	2.85	2	75	0.044	99	100	185.4	-0.21	0.82	15.60	113.1	169.5	164.9	56.2	169.3	116	71	71	70	0.011	1.001	6.815	771
1192	190.196	189.924		0.16	0.16	1.31	1.06	0.36	83	83	70	2.89	2	82	0.044	100	100	184.9	0.57	0.82	15.46	112.9	169.4	164.8	56.2	169.1	115	71	71	70	0.011	1.001	6.816	771
1193	190.356	190.085		0.16	0.16	1.30	1.07	0.36	83	83	70	2.87	2	76	0.044	99	100	185.4	-0.49	0.86	15.47	112.8	169.3	164.7	56.2	169.0	144	71	71	70	0.032	1.001	7.138	806
1194	190.517	190.246		0.16	0.16	1.31	1.06	0.36	83	83	70	2.87	2	75	0.041	103	104	185.4	-0.08	0.82	15.56	112.7	169.2	164.6	56.2	168.9	135	71	70	70	0.018	1.001	6.817	769
1195	190.677	190.407		0.16	0.16	1.31	1.06	0.36	83	83	70	2.86	2	75	0.045	98	99	185.6	-0.16	0.76	15.46	112.6	169.2	164.5	56.2	168.7	132	71	71	70	0.017	1.001	6.328	713
1196	190.837	190.567		0.16	0.16	1.32	1.06	0.36	83	83	70	2.86	2	75	0.044	99	99	185.0	0.61	0.82	15.47	112.5	168.9	164.3	56.2	168.7	130	71	71	70	0.016	1.001	6.822	768
1197	190.998	190.729		0.16	0.16	1.31	1.06	0.36	83	83	70	2.85	2	75	0.040	105	106	184.8	0.18	0.78	15.41	112.4	168.9	164.5	56.2	168.6	128	71	71	70	0.015	1.001	6.528	735
1198	191.158	190.889		0.16	0.16	1.32	1.06	0.36	83	83	70	2.87	2	75	0.043	100	101	185.2	-0.39	0.87	15.54	112.3	168.8	164.2	56.2	168.5	127	71	71	70	0.014	1.001	7.288	820
1199	191.318	191.050		0.16	0.16	1.31	1.06	0.36	83	83	70	2.85	2	75	0.043	100	101	185.0	0.23	0.78	15.44	112.1	168.5	164.0	56.2	168.3	124	71	71	70	0.014	1.001	6.516	731
1200	191.478	191.212		0.16	0.16	1.31	1.06	0.36	83	83	70	2.86	2	75	0.044	99	101	185.2	-0.18	0.81	15.53	111.9	168.5	163.9	56.2	168.1	124	71	71	70	0.014	1.001	6.721	753
1201	191.638	191.373		0.16	0.16	1.31	1.06	0.36	83	83	70	2.87	2	75	0.043	100	101	185.5	-0.31	0.84	15.53	111.8	168.3	163.8	56.2	168.0	123	71	71	70	0.014	1.001	6.974	781
1202	191.799	191.533		0.16	0.16	1.31	1.06	0.36	83	83	70	2.86	2	74	0.044	100	99	185.0	0.46	0.80	15.57	111.6	168.2	163.7	56.2	167.9	122	71	71	70	0.013	1.001	6.696	748
1203	191.959	191.694		0.16	0.16	1.31	1.06	0.36	83	83	70	2.86	2	75	0.042	101	102	185.1	-0.08	0.74	15.47	111.5	168.0	163.5	56.2	167.7	121	71	71	70	0.013	1.001	6.191	691
1204	192.119	191.856		0.16	0.16	1.31	1.06	0.36	83	83	70	2.85	2	75	0.039	105	107	185.0	0.11	0.86	15.52	111.4	167.9	163.4	56.2	167.6	120	71	71	70	0.012	1.001	7.135	796
1205	192.280	192.016		0.16	0.16	1.31	1.06	0.36	83	83	70	2.85	2	74	0.042	102	102	185.3	-0.33	0.82	15.46	111.3	167.8	163.3	56.2	167.4	119	71	71	70	0.012	1.001	6.807	758
1206	192.440	192.177		0.16	0.16	1.32	1.06	0.36	83	83	70	2.85	2	75	0.046	97	98	185.3	0.06	0.82	15.55	111.2	167.7	163.2	56.2	167.3	119	71	71	70	0.012	1.001	6.812	758
1207	192.600	192.338		0.16	0.16	1.31	1.06	0.36	83	83	70	2.86	2	74	0.039	105	106	184.8	0.42	0.82	15.33	111.1	167.5	163.0	56.2	167.3	118	71	71	70	0.012	1.001	6.814	758
1208	192.761	192.499		0.16	0.16	1.31	1.06	0.36	83	83	70	2.87	2	75	0.043	101	101	185.2	-0.37	0.80	15.53	110.9	167.4	162.8	56.2	167.1	117	71	71	70	0.012	1.001	6.649	738
1209	192.921	192.660		0.16	0.16	1.31	1.06	0.36	83	83	70	2.85	2	75	0.043	100	101	185.1	0.15	0.76	15.48	110.9	167.3	162.8	56.2	167.0	116	71	71	70	0.012	1.001	6.326	702
1210	193.081	192.821		0.16	0.16	1.31	1.06	0.36	83	83	70	2.87	2	74	0.045	98	99	185.2	-0.12	0.80	15.46	110.7	167.2	162.7	56.2	166.9	117	71	71	70	0.012	1.001	6.651	737
1211	193.242	192.983		0.16	0.16	1.31	1.06	0.36	83	83	70	2.86	2	74	0.042	102	103	184.9	0.27	0.82	15.54	110.6	167.0	162.5	56.2	166.7	114	71	71	70	0.011	1.001	6.815	754
1212	193.403	193.143		0.16	0.16	1.30	1.06	0.36	83	83	70	2.85	2	75	0.041	103	103	185.3	-0.41	0.82	15.45	110.4	166.9	162.3	56.2	166.6	114	71	71	70	0.012	1.001	6.815	754
1213	193.563	193.304		0.16	0.16	1.31	1.07	0.36	83	83	70	2.85	2	74	0.043	100	101	185.5	-0.16	0.86	15.48	110.3	166.7	162.1	56.2	166.4	113	71	71	70	0.012	1.001	7.138	788
1214	193.724	193.465		0.16	0.16	1.31	1.06	0.36	83	83	70	2.86	2	74	0.044	100	100	184.9	0.55	0.82	15.50	110.2	166.7	162.4	56.1	166.3	113	71	71	70	0.012	1.001	6.812	751
1215	193.884	193.625		0.16	0.16	1.31	1.03	0.36	83	83	70	2.87	2	75	0.041	103	103	185.4	-0.43	0.84	15.51	110.1	166.6	162.1	56.1	166.2	114	71	71	70	0.011	1.001	6.983	770
1216	194.044	193.784		0.16	0.16	1.32	1.04	0.36	83	83	70	2.85	2	75	0.044	99	99	184.9	0.47	0.86	15.56	110.0	166.4	161.9	56.2	166.1	113	71	71	70	0.011	1.001	7.139	786
1217	194.204	193.944		0.16	0.16	1.31	1.04	0.36	83	83	70	2.86	2	75	0.043	100	101	185.0	-0.08	0.82	15.47	109.8	166.3	161.8	56.2	165.9	114	71	71	70	0.011	1.001	6.811	749
1218	194.364	194.102		0.16	0.16	1.31	1.04	0.36	83	83	70	2.87	2	74	0.044	99	98	185.5	-0.52	0.82	15.51	109.7	166.1	161.6	56.1	165.8	113	71	71	70	0.010	1.001	6.811	748
1219	194.524	194.261		0.16	0.16	1.31	1.04	0.36	83	83	70	2.85	2	74	0.047	96	95	185.3	0.20	0.86	15.47	109.5	165.9	161.5	56.2	165.7	113	71	71	70	0.011	1.001	7.138	783
1220	194.684	194.421		0.16	0.16	1.31	1.04	0.36	83	83	70	2.87	2	74	0.042	101	102	184.8	0.45	0.82	15.47	109.4	165.8	161.5	56.1	165.6	112	71	71	70	0.011	1.001	6.817	747
1221	194.845	194.579		0.16	0.16	1.31	1.04	0.36	83	83	70	2.85	2	75	0.044	100	98	185.2	-0.38	0.78	15.44	109.3	165.7	161.3	56.1	165.4	112	71	71	70	0.010	1.001	6.489	710
1222	195.005	194.738		0.16	0.16	1.31	1.04	0.36	83	83	70	2.85	2	74	0.045	98	98	184.7	0.49	0.76	15.49	109.2	165.6	161.3	56.1	165.3	110	71	71	70	0.011	1.001	6.330	692
1223	195.165	194.898		0.16	0.16	1.30	1.02	0.36	83	83	70	2.88	2	81	0.044	100	100	185.0	-0.24	0.80	15.47	109.0	165.4	161.0	56.1	165.1	111	71	71	70	0.011	1.001	6.655	726
1224	195.325	195.056		0.16	0.16	1.31	1.04	0.36	83	83	70	2.87	2	75	0.044	99	98	185.2	-0.20	0.89	15.53	109.0	165.4	160.9	56.1	165.1	135	71	71	70	0.029	1.001	7.460	814
1225	195.485	195.216		0.16	0.16	1.31	1.04	0.36	83	83	70	2.86	2	74	0.041	103	103	184.8	0.42	0.84	15.49	108.9	165.2	160.7	56.1	165.0	130	71	71	70	0.016	1.001	6.972	760
1226	195.646	195.375		0.16	0.16	1.31	1.04	0.36	83	83	70	2.87	2	74	0.043	101	100	185.7	-0.88	0.82	15.48	108.8	165.1	160.6	56.1	164.8	127	71	71	70	0.016	1.001	6.817	742
1227	195.806	195.534		0.16	0.16	1.31	1.04	0.36	83	83	70	2.86	2	74	0.039	105	105	185.2	0.47	0.82	15.50	108.7	165.0	160.5	56.1	164.7	125	71	71	70	0.015	1.001	6.821	742
1228	195.966	195.694		0.16	0.16	1.31	1.03	0.36	83	83	70	2.86	2	75	0.042	101	102	185.1	0.12	0.80	15.61	108.5	164.8	160.4	56.1	164.6	124	71	71	70	0.014	1.001	6.696	727
1229	196.127	195.852		0.16	0.16	1.32	1.04	0.36	83	83	70	2.86	2	74	0.044	100	98	185.3	-0.20	0.82	15.55	108.4	164.8	160.3	56.1	164.5	122	71	71	70	0.014	1.001	6.810	739
1230	196.287	196.011		0.16	0.16	1.32	1.04	0.36	83	83	70	2.87	2	74	0.045	98	98	185.4	-0.11	0.85	15.51	108.2	164.6	160.2	56.1	164.3	119	71	71	70	0.013	1.001	7.092	768

Elapsed Time	Particulate Sampling Data																Fuel Weight, lb		Flow, gpm		Temperature Data, oF												
	Gas Meter Cubic Feet (1)	Gas Meter Cubic Feet (2)	Gas Meter Cubic Feet (amb)	Sample Rate, cfm (1)	Sample Rate, cfm (2)	Orifice dH (1)	Orifice dH (2)	Orifice dH (amb)	Meter oF (1)	Meter oF (2)	Meter oF (amb)	Meter Vac. In. Hg. (1)	Meter Vac. In. Hg. (2)	Dilution Tunnel Temp.	Dilution Tunnel dP	Pro. Rate (%) (1)	Pro. Rate (%) (2)	Scale Reading	Weight Change	Load Side Liquid Flow Rate	Boiler Side Liquid Flow Rate (optional)	Thermopile ΔT	Boiler to Heat Exch. Temp.	Heat Exch to Boiler Temp.	Inlet Load Temp.	Outlet Load Temp.	Stack	Filter (1)	Filter (2)	Ambient		Specific Heat of Inlet Water (BTU/lb-°F)	Mass Flow Rate of Inlet Water (lb/min)	Heat Output, Btu
1231	196.448	196.171		0.16	0.16	1.31	1.04	0.36	83	83	70	2.86	2	74	0.044	100	99	185.2	0.19	0.83	15.48	108.1	164.4	160.0	56.0	164.2	119	71	71	70	0.013	1.001	6.904	747
1232	196.608	196.329		0.16	0.16	1.32	1.04	0.36	83	83	70	2.85	2	74	0.043	100	99	185.0	0.20	0.82	15.41	108.0	164.3	159.9	56.0	164.0	119	71	71	70	0.012	1.001	6.870	743
1233	196.768	196.489		0.16	0.16	1.31	1.04	0.36	83	83	70	2.86	2	75	0.046	97	97	185.3	-0.29	0.86	15.45	107.9	164.3	159.8	56.0	163.9	117	71	71	70	0.013	1.001	7.141	771
1234	196.929	196.648		0.16	0.16	1.31	1.03	0.36	83	83	70	2.86	2	74	0.045	99	98	184.9	0.33	0.78	15.55	107.7	164.0	159.5	56.1	163.7	116	71	71	70	0.012	1.001	6.471	698
1235	197.089	196.807		0.16	0.16	1.31	1.04	0.36	83	83	70	2.87	2	74	0.043	100	100	185.3	-0.35	0.82	15.43	107.6	163.9	159.5	56.1	163.6	116	71	71	70	0.012	1.001	6.814	734
1236	197.249	196.967		0.16	0.16	1.31	1.04	0.36	83	83	70	2.86	2	74	0.044	99	99	184.8	0.50	0.88	15.51	107.4	163.8	159.4	56.0	163.5	114	71	71	70	0.012	1.001	7.325	788
1237	197.409	197.125		0.16	0.16	1.31	1.03	0.36	83	83	70	2.85	2	74	0.045	98	97	184.8	0.01	0.82	15.51	107.3	163.7	159.3	56.0	163.4	115	71	71	70	0.012	1.001	6.813	732
1238	197.570	197.284		0.16	0.16	1.31	1.04	0.36	83	83	70	2.86	2	74	0.046	97	96	184.8	-0.05	0.78	15.53	107.2	163.5	159.3	56.0	163.2	114	71	71	70	0.012	1.001	6.486	696
1239	197.730	197.444		0.16	0.16	1.31	1.04	0.36	83	83	70	2.87	2	75	0.042	101	102	184.7	0.11	0.80	15.54	107.2	163.4	159.1	56.0	163.2	113	71	71	70	0.011	1.001	6.650	713
1240	197.890	197.603		0.16	0.16	1.31	1.04	0.36	83	83	70	2.85	2	75	0.041	103	102	185.2	-0.53	0.88	15.53	106.9	163.2	158.9	56.0	162.9	113	71	71	70	0.011	1.001	7.304	782
1241	198.051	197.762		0.16	0.16	1.31	1.04	0.36	83	83	70	2.85	2	74	0.043	101	100	184.5	0.75	0.80	15.49	106.7	163.1	158.9	56.1	162.8	112	71	71	70	0.011	1.001	6.654	711
1242	198.211	197.922		0.16	0.16	1.32	1.04	0.36	83	83	70	2.85	2	74	0.044	99	99	184.9	-0.44	0.74	15.51	106.7	162.9	158.6	56.0	162.7	111	71	71	70	0.011	1.001	6.164	659
1243	198.371	198.081		0.16	0.16	1.32	1.04	0.36	83	83	70	2.87	2	74	0.044	99	99	184.7	0.27	0.84	15.55	106.6	162.9	158.6	56.0	162.5	112	71	71	70	0.011	1.001	6.974	744
1244	198.532	198.240		0.16	0.16	1.32	1.04	0.36	83	83	70	2.86	2	75	0.044	100	99	184.8	-0.12	0.76	15.58	106.5	162.8	158.6	56.0	162.5	111	71	71	70	0.011	1.001	6.332	675
1245	198.692	198.400		0.16	0.16	1.31	1.04	0.36	83	83	70	2.86	2	74	0.044	99	99	185.2	-0.42	0.84	15.41	106.3	162.6	158.4	56.0	162.3	111	71	71	70	0.010	1.001	6.979	743
1246	198.852	198.558		0.16	0.16	1.32	1.04	0.36	83	83	70	2.87	2	74	0.045	98	97	185.4	-0.20	0.88	15.53	106.1	162.4	158.1	56.0	162.2	110	71	71	70	0.010	1.001	7.299	776
1247	199.013	198.718		0.16	0.16	1.31	1.04	0.36	83	83	70	2.86	2	74	0.045	99	98	184.9	0.50	0.80	15.58	106.0	162.3	158.0	56.0	162.1	109	71	71	70	0.010	1.001	6.651	706
1248	199.173	198.877		0.16	0.16	1.32	1.04	0.36	83	83	70	2.86	2	75	0.044	99	99	184.9	-0.03	0.90	15.58	105.9	162.2	157.9	56.0	161.9	110	71	71	70	0.010	1.001	7.465	791
1249	199.334	199.036		0.16	0.16	1.32	1.04	0.36	83	83	70	2.86	2	75	0.044	100	99	184.8	0.12	0.88	15.47	105.7	162.0	157.7	56.0	161.7	109	71	71	70	0.011	1.001	7.299	772
1250	199.495	199.196		0.16	0.16	1.31	1.04	0.36	83	83	70	2.87	2	75	0.042	102	102	185.6	-0.75	0.84	15.49	105.6	162.0	157.7	56.0	161.7	109	71	71	70	0.010	1.001	6.975	738
1251	199.655	199.355		0.16	0.16	1.31	1.04	0.36	83	83	70	2.85	2	75	0.042	101	101	185.0	0.55	0.88	15.49	105.5	161.8	157.5	56.0	161.6	109	71	71	70	0.010	1.001	7.303	772
1252	199.816	199.514		0.16	0.16	1.31	1.04	0.36	83	83	70	2.87	2	75	0.048	95	95	184.1	0.86	0.84	15.52	105.3	161.7	157.4	56.0	161.4	109	71	71	70	0.010	1.001	6.978	736
1253	199.976	199.674		0.16	0.16	1.31	1.04	0.36	83	83	70	2.87	2	75	0.042	101	102	184.7	-0.56	0.82	15.46	105.3	161.5	157.3	56.1	161.3	107	71	71	70	0.010	1.001	6.813	718
1254	200.136	199.832		0.16	0.16	1.31	1.03	0.36	83	83	70	2.88	2	81	0.042	102	101	184.3	0.44	0.80	15.51	105.1	161.4	157.2	56.0	161.1	107	71	71	70	0.010	1.001	6.651	700
1255	200.296	199.991		0.16	0.16	1.31	1.04	0.36	83	83	70	2.86	2	75	0.046	97	97	184.7	-0.39	0.89	15.56	105.0	161.3	157.0	56.1	161.0	129	71	71	70	0.027	1.001	7.456	783
1256	200.457	200.151		0.16	0.16	1.31	1.04	0.36	83	83	70	2.85	2	75	0.046	98	97	184.7	-0.03	0.84	15.56	104.9	161.2	157.0	56.0	160.9	127	71	71	70	0.014	1.001	6.980	733
1257	200.617	200.310		0.16	0.16	1.31	1.04	0.36	83	83	70	2.87	2	75	0.045	98	98	185.4	-0.69	0.86	15.55	104.7	161.1	156.9	56.1	160.8	124	71	71	70	0.014	1.001	7.139	749
1258	200.777	200.469		0.16	0.16	1.31	1.04	0.36	83	83	70	2.86	2	75	0.041	103	102	185.2	0.18	0.84	15.57	104.7	161.0	156.7	56.0	160.7	121	71	71	70	0.013	1.001	6.980	732
1259	200.937	200.628		0.16	0.16	1.31	1.03	0.36	83	83	71	2.87	2	75	0.044	99	99	185.3	-0.11	0.81	15.51	104.5	160.8	156.6	56.0	160.5	120	71	71	71	0.013	1.001	6.756	707
1260	201.098	200.787		0.16	0.16	1.31	1.04	0.36	83	83	71	2.86	2	75	0.043	101	100	184.7	0.62	0.84	15.55	104.4	160.7	156.5	56.0	160.4	119	71	71	71	0.012	1.001	6.978	729
1261	201.257	200.947		0.16	0.16	1.31	1.04	0.36	83	83	70	2.86	2	75	0.045	97	98	184.8	-0.10	0.82	15.57	104.2	160.5	156.4	56.0	160.3	118	71	71	70	0.012	1.001	6.817	712
1262	201.418	201.106		0.16	0.16	1.31	1.04	0.36	83	83	70	2.86	2	75	0.047	96	96	185.0	-0.21	0.85	15.49	104.1	160.5	156.3	56.1	160.2	116	71	71	70	0.012	1.001	7.084	739
1263	201.578	201.265		0.16	0.16	1.32	1.04	0.36	83	83	70	2.87	2	75	0.044	99	99	184.7	0.30	0.79	15.48	103.9	160.2	156.1	56.1	160.0	115	71	71	70	0.012	1.001	6.608	688
1264	201.739	201.425		0.16	0.16	1.31	1.04	0.36	83	83	70	2.86	2	75	0.040	105	104	184.5	0.15	0.85	15.48	103.9	160.2	156.0	56.0	159.9	114	71	71	70	0.011	1.001	7.088	738
1265	201.899	201.583		0.16	0.16	1.31	1.04	0.36	83	83	70	2.86	2	74	0.046	97	96	184.6	-0.04	0.82	15.59	103.8	160.1	155.9	56.0	159.8	113	71	71	70	0.011	1.001	6.804	707
1266	202.059	201.742		0.16	0.16	1.31	1.04	0.36	83	83	70	2.86	2	75	0.046	97	97	184.5	0.06	0.76	15.59	103.6	159.9	155.7	56.0	159.6	113	71	71	70	0.011	1.001	6.326	656
1267	202.220	201.902		0.16	0.16	1.31	1.04	0.36	83	83	70	2.86	2	74	0.043	101	100	184.4	0.09	0.80	15.51	103.5	159.8	155.7	56.0	159.5	112	71	71	70	0.010	1.001	6.651	689
1268	202.381	202.061		0.16	0.16	1.32	1.04	0.36	83	83	70	2.85	2	74	0.044	100	99	184.4	0.03	0.75	15.58	103.4	159.7	155.5	56.0	159.4	112	71	71	70	0.010	1.001	6.280	650
1269	202.541	202.220		0.16	0.16	1.31	1.04	0.36	83	83	71	2.88	2	83	0.042	102	102	183.1	1.26	0.82	15.58	103.2	159.5	155.3	56.0	159.2	109	71	71	71	0.010	1.001	6.812	704
1270	202.701	202.379		0.16	0.16	1.31	1.03	0.36	83	83	71	2.88	2	86	0.042	102	102	182.2	0.90	0.82	15.49	103.2	159.5	155.4	56.0	159.2	131	72	71	71	0.029	1.001	6.810	704
1271	202.861	202.537		0.16	0.16	1.32	1.04	0.36	83	83	71	2.87	2	89	0.039	107	106	180.9	1.33	0.84	15.50	103.4	159.7	155.5	56.0	159.4	163	72	71	71	0.031	1.001	6.971	721
1272	203.021	202.697		0.16	0.16	1.31	1.03	0.36	83	83	71	2.87	2	92	0.042	103	103	179.9	1.01	0.82	15.53	103.8	160.3	156.1	56.0	159.8	181	72	71	71	0.033	1.001	6.810	707
1273	203.181	202.854		0.16	0.16	1.32	1.03	0.36	83	83	71	2.88	2	97	0.044	101	99	178.7	1.21	0.88	15.53	104.5	161.1	156.7	56.0	160.5	204	72	72	71	0.033	1.001	7.297	763
1274	203.340	203.012		0.16	0.16	1.31	1.04	0.36	83	83	71	2.87	2	100	0.041	104	104	178.0	0.67	0.78	15.53	105.4	161.9	157.6	56.0	161.4	228	72	72	71	0.040	1.001	6.485	684
1275	203.500	203.172		0.16	0.16	1.32	1.04	0.36	83	83	71	2.88	2	102	0.044	102	102	177.1	0.89	0.82	15.46	106.2	162.8	158.4	56.0	162.2	243	73	72	71	0.042	1.001	6.810	724
1276	203.660	203.329		0.16	0.16	1.31	1.04	0.36	83	83	71	2.89	2	104	0.041	105	104	174.9	2.27	0.84	15.57	107.2	163.8	159.4	56.0	163.2	251	73	72	71	0.042	1.001	6.972	748
1277	203.819	203.488		0.16	0.16	1.32	1.04	0.36	83	83	71	2.88	2	106	0.040	106	107	173.7	1.17	0.87	15.53	108.4	164.9	160.4	56.0	164.4	257	73	73	71	0.039	1.001	7.291	791
1278	203.979	203.646		0.16	0.16	1.32	1.03	0.36	83	83	71	2.89	2	108	0.043	103	102	172.7	1.03	0.82	15.40	109.3	165.9	161.4	56.0	165.3	262	74	73	71	0.045	1.001	6.807	745
1279	204.138	203.803		0.16	0.16	1.31	1.03	0.36	83	83	71	2.89	2	109	0.040	107	105	172.6	0.10	0.88	15.47	110.4	167.2	162.6	56.0	166.4	267	74	73	71	0.046	1.001	7.296	806
1280	204.297	203.961		0.16	0.16	1.31	1.02	0.36	83	83	71	2.90	2	110	0.039	108	108	170.3	2.25	0.76	15.51	111.6	168.2	163.6	56.0	167.6	271	75	74	71	0.044	1.001	6.322	706
1281	204.457	204.118		0.16	0.16	1.31	1.03	0.36	83	83	71	2.91	2	112	0.046	100	99	169.3	0.98	0.78	15.54	112.7	169.4	164.7	56.0	168.8	276	75	75	71	0.041	1.001	6.483	732
1282	204.617	204.276		0.16	0.16	1.31	1.02	0.36	83	84	71	2.92	2	113	0.039	109	108	168.5	0.82	0.80	15.59	113.8	170.6	165.8	56.1	169.9	279	76	75	71	0.046	1.001	6.647	758
1283	204.775	204.432		0.16	0.16	1.30	1.02	0.36	83	83	71	2.93	2	114	0.040	106	105	166.1	2.37	0.82	15.48	115.2	171.9	167.2	56.0	171.2	283	77	76	71	0.049	1.001	6.805	785
1284	204.934	204.589		0.16	0.16	1.30	1.02	0.36	83	83	71	2.94	2	115	0.036	113	112	164.8	1.34	0.86	15.53	116.5	173.3	168.4	56.1	172.6	286	77	76	71	0.048	1.001	7.135	833
1285	205.093	204.745		0.16	0.16	1.30	1.01	0.36	83	83	71	2.94	2	115	0.040	107	105	163.7	1.06	0.84	15.39	118.0	174.7	169.8	56.1	174.0	290	78	77	71	0.048	1.001	6.967	823
1286	205.251	204.902		0.16	0.16	1.30	1.01	0.36	83	84	71	2.95	2	114	0.039	108	107	162.2	1.58	0.80	12.90	119.3	176.0	171.1	56.1	175.3	292	79	77	71	0.053	1.001	6.649	794
1287	205.409	205.057		0.16	0.16	1.29	1.00	0.36	83	83	71	2.96	2	113	0.040	106	104	160.8	1.35	0.80	11.65	120.4	177.2	172.2	56.1	176.5	290	79	78	71	0.050	1.001	6.653	802
1288	205.567	205.213		0.16	0.16	1.29	1.00	0.36	83	84	71	2.96	2	114	0.041	105	104	159.6	1.25	0.82	10.33	121.7	178.5	173.4	56.0	177.8	288	80	78	71	0.049	1.001	6.812	830
1289	205.726	205.367		0.16	0.15	1.28	1.00	0.36	83	84	71	2.97	2	113	0.044	102	99	157.8	1.75	0.82	12.89	122.9	179.7	174.6	56.1	179.0	290	80	79	71	0.051	1.001	6.813	838
1290	205.884	205.523		0.16	0.16	1.28	0.99	0.36	83	84	71	2.98	2	113	0.043	102	101	157.3	0.55	0.84	10.37	124.2	180.9	175.8	56.0	180.2	290	80	79	71	0.049	1.001	7.041	875
1291	206.041	205.677		0.16	0.15	1.28	0.99	0.36	83	84	71	2.97	2	113	0.040	106	104	156.5	0.78	0.82	11.11	125.1	181.7	176.7	56.1	181.2	290	81	79	71	0.047	1.001	6.818	854
1292	206.199	205.832		0.16	0.16	1.28	0.99	0.36	83	84	71	2.98	2	92	0.041	103	101	155.2	1.32	0.84	10.24	125.7	182.2	177.1	56.1	181.7	289	81	80	71	0.057	1.001	6.978	878

Elapsed Time	Particulate Sampling Data																Fuel Weight, lb		Flow, gpm		Temperature Data, oF												
	Gas Meter Cubic Feet (1)	Gas Meter Cubic Feet (2)	Gas Meter Cubic Feet (amb)	Sample Rate, cfm (1)	Sample Rate, cfm (2)	Orifice dH (1)	Orifice dH (2)	Orifice dH (amb)	Meter oF (1)	Meter oF (2)	Meter oF (amb)	Meter Vac. In. Hg. (1)	Meter Vac. In. Hg. (2)	Dilution Tunnel Temp.	Dilution Tunnel dP	Pro. Rate (%) (1)	Pro. Rate (%) (2)	Scale Reading	Weight Change	Load Side Liquid Flow Rate	Boiler Side Liquid Flow Rate (optional)	Thermopile ΔT	Boiler to Heat Exch. Temp.	Heat Exch to Boiler Temp.	Inlet Load Temp.	Outlet Load Temp.	Stack	Filter (1)	Filter (2)	Ambient		Specific Heat of Inlet Water (BTU/lb-°F)	Mass Flow Rate of Inlet Water (lb/min)	Heat Output, Btu
1293	206.357	205.987		0.16	0.16	1.28	0.99	0.36	83	84	70	2.96	2	89	0.044	99	97	155.5	-0.33	0.78	7.79	126.1	182.6	177.5	56.0	182.1	256	78	78	70	0.037	1.001	6.533	825
1294	206.515	206.142		0.16	0.16	1.28	0.99	0.36	83	84	70	2.96	2	86	0.042	101	99	155.0	0.47	0.82	5.18	126.4	182.9	177.8	56.0	182.5	239	78	77	70	0.036	1.001	6.823	864
1295	206.674	206.297		0.16	0.16	1.28	0.99	0.36	83	84	70	2.96	2	85	0.046	97	95	154.5	0.53	0.80	7.74	126.6	183.2	178.1	56.1	182.7	228	77	76	70	0.034	1.001	6.656	844
1296	206.832	206.452		0.16	0.16	1.28	0.99	0.36	83	84	70	2.95	2	81	0.044	98	97	154.4	0.11	0.80	4.90	126.8	183.4	178.4	56.1	182.9	220	76	75	70	0.033	1.001	6.656	845
1297	206.990	206.608		0.16	0.16	1.28	1.00	0.36	83	84	70	2.94	2	81	0.043	100	98	154.2	0.16	0.78	4.33	127.1	183.6	178.4	56.1	183.2	216	76	74	70	0.033	1.001	6.490	826
1298	207.149	206.764		0.16	0.16	1.28	1.00	0.36	83	84	70	2.95	2	80	0.045	98	96	153.9	0.30	0.87	6.40	127.1	183.7	178.6	56.2	183.3	211	75	74	70	0.033	1.001	7.257	924
1299	207.307	206.920		0.16	0.16	1.28	1.00	0.36	83	84	70	2.95	2	79	0.043	99	98	153.7	0.25	0.84	6.81	127.1	183.8	178.7	56.3	183.4	207	75	73	70	0.034	1.001	6.974	888
1300	207.465	207.076		0.16	0.16	1.29	1.00	0.36	83	84	70	2.93	2	79	0.045	97	96	153.8	-0.13	0.84	2.28	127.3	183.9	178.7	56.2	183.5	204	74	73	70	0.032	1.001	6.977	889
1301	207.624	207.232		0.16	0.16	1.29	1.00	0.36	83	84	70	2.93	2	78	0.045	98	96	153.0	0.77	0.84	5.97	127.4	183.9	178.7	56.1	183.5	201	74	73	70	0.032	1.001	6.977	890
1302	207.783	207.388		0.16	0.16	1.29	1.01	0.36	83	84	70	2.92	2	77	0.044	99	97	153.6	-0.56	0.78	6.48	127.5	183.9	178.8	56.1	183.5	199	73	72	70	0.032	1.001	6.490	828
1303	207.943	207.545		0.16	0.16	1.29	1.01	0.36	83	84	70	2.92	2	76	0.044	99	97	153.5	0.13	0.84	1.14	127.5	184.1	178.8	56.1	183.6	198	72	71	70	0.030	1.001	6.977	891
1304	208.102	207.702		0.16	0.16	1.29	1.01	0.36	83	84	70	2.92	2	76	0.042	101	100	153.4	0.08	0.82	5.71	127.4	184.1	179.0	56.2	183.7	196	72	71	70	0.032	1.001	6.815	869
1305	208.261	207.859		0.16	0.16	1.29	1.01	0.36	83	84	70	2.90	2	76	0.044	99	97	153.4	0.00	0.86	3.40	127.5	184.1	178.9	56.1	183.6	194	72	71	70	0.034	1.001	7.136	911
1306	208.420	208.017		0.16	0.16	1.29	1.01	0.36	83	84	70	2.90	2	76	0.041	102	102	152.6	0.75	0.78	1.78	127.6	184.1	178.9	56.1	183.7	192	72	72	70	0.034	1.001	6.487	829
1307	208.579	208.174		0.16	0.16	1.29	1.02	0.36	83	84	70	2.91	2	76	0.044	99	97	152.9	-0.28	0.80	7.79	127.6	184.2	178.9	56.1	183.7	190	72	72	70	0.035	1.001	6.649	850
1308	208.739	208.332		0.16	0.16	1.30	1.02	0.36	83	84	70	2.91	2	76	0.045	98	97	152.7	0.20	0.84	8.95	127.6	184.1	178.8	56.0	183.6	188	72	72	70	0.034	1.001	6.975	891
1309	208.898	208.489		0.16	0.16	1.30	1.02	0.36	83	84	70	2.90	2	76	0.045	97	96	152.6	0.15	0.82	6.01	127.5	184.1	178.8	56.1	183.6	186	72	72	70	0.034	1.001	6.816	870
1310	209.057	208.647		0.16	0.16	1.30	1.03	0.36	83	84	70	2.89	2	76	0.043	100	99	152.7	-0.10	0.82	1.99	127.7	184.0	178.9	56.0	183.7	185	72	72	70	0.034	1.001	6.812	871
1311	209.217	208.806		0.16	0.16	1.31	1.02	0.36	83	84	70	2.89	2	76	0.041	103	102	152.5	0.14	0.86	3.92	127.6	184.0	178.9	56.1	183.6	182	72	72	70	0.034	1.001	7.136	911
1312	209.377	208.964		0.16	0.16	1.31	1.03	0.36	83	84	70	2.89	2	76	0.045	98	97	152.6	-0.13	0.84	4.56	127.5	183.9	178.8	56.1	183.5	180	72	72	70	0.033	1.001	6.974	890
1313	209.536	209.124		0.16	0.16	1.30	1.03	0.36	83	84	70	2.87	2	75	0.046	96	97	152.9	-0.24	0.80	4.41	127.5	183.9	178.8	56.0	183.6	178	72	71	70	0.032	1.001	6.649	849
1314	209.697	209.282		0.16	0.16	1.30	1.03	0.36	83	84	70	2.87	2	75	0.045	99	97	152.4	0.47	0.78	5.59	127.5	183.9	178.9	56.1	183.6	177	72	71	70	0.032	1.001	6.488	828
1315	209.857	209.441		0.16	0.16	1.31	1.04	0.36	83	84	70	2.87	2	76	0.045	98	98	152.3	0.14	0.76	8.18	127.5	183.9	178.8	56.1	183.5	175	72	71	70	0.032	1.001	6.333	808
1316	210.017	209.600		0.16	0.16	1.31	1.04	0.36	83	84	70	2.86	2	75	0.044	99	99	152.3	0.00	0.80	5.19	127.3	183.8	178.6	56.1	183.4	173	71	71	70	0.031	1.001	6.655	848
1317	210.177	209.759		0.16	0.16	1.31	1.03	0.36	83	83	70	2.86	2	75	0.043	100	100	152.8	-0.46	0.86	7.16	127.3	183.8	178.6	56.1	183.4	174	72	71	70	0.031	1.001	7.138	910
1318	210.337	209.918		0.16	0.16	1.31	1.03	0.36	83	83	70	2.86	2	75	0.043	100	100	152.5	0.21	0.80	9.02	127.2	183.8	178.7	56.1	183.3	170	71	71	70	0.030	1.001	6.665	849
1319	210.497	210.077		0.16	0.16	1.31	1.03	0.36	83	83	70	2.86	2	75	0.045	98	98	152.8	-0.21	0.82	2.66	127.2	183.6	178.6	56.1	183.3	170	71	71	70	0.029	1.001	6.862	874
1320	210.657	210.235		0.16	0.16	1.31	1.04	0.36	83	83	70	2.87	2	75	0.041	103	102	152.6	0.16	0.82	7.79	127.1	183.6	178.6	56.1	183.2	168	71	71	70	0.029	1.001	6.820	868
1321	210.817	210.395		0.16	0.16	1.31	1.03	0.36	83	83	71	2.87	2	75	0.046	97	97	152.5	0.05	0.88	3.94	127.0	183.6	178.5	56.2	183.2	169	71	71	71	0.029	1.001	7.352	935
1322	210.978	210.553		0.16	0.16	1.31	1.03	0.36	83	83	71	2.86	2	76	0.047	97	95	152.4	0.15	0.85	3.31	127.0	183.5	178.4	56.2	183.2	167	71	71	71	0.028	1.001	7.081	900
1323	211.138	210.712		0.16	0.16	1.31	1.04	0.36	83	83	71	2.86	2	76	0.046	97	97	152.5	-0.15	0.83	2.65	126.9	183.4	178.3	56.1	183.0	165	71	71	71	0.027	1.001	6.947	882
1324	211.298	210.871		0.16	0.16	1.31	1.04	0.36	83	83	71	2.86	2	75	0.044	99	99	152.3	0.21	0.83	4.08	126.9	183.3	178.2	56.1	183.0	164	71	71	71	0.027	1.001	6.899	876
1325	211.458	211.030		0.16	0.16	1.31	1.03	0.36	83	83	71	2.86	2	75	0.044	99	99	152.6	-0.25	0.82	5.50	126.8	183.4	178.2	56.1	182.9	163	71	71	71	0.028	1.001	6.871	872
1326	211.618	211.188		0.16	0.16	1.31	1.03	0.36	83	83	71	2.86	2	76	0.044	99	98	152.0	0.57	0.80	2.84	126.8	183.3	178.2	56.1	182.9	163	71	71	71	0.027	1.001	6.648	844
1327	211.779	211.348		0.16	0.16	1.31	1.03	0.36	83	84	71	2.86	2	75	0.044	100	99	152.4	-0.37	0.80	6.29	126.7	183.1	178.1	56.1	182.8	163	71	71	71	0.026	1.001	6.646	843
1328	211.939	211.506		0.16	0.16	1.31	1.03	0.36	83	84	71	2.87	2	75	0.045	98	97	152.6	-0.20	0.80	7.18	126.6	183.1	178.1	56.1	182.7	163	71	71	71	0.026	1.001	6.650	843
1329	212.099	211.666		0.16	0.16	1.31	1.03	0.36	83	84	71	2.87	2	75	0.041	103	103	152.7	-0.14	0.86	5.13	126.5	183.1	177.9	56.1	182.6	160	71	71	71	0.025	1.001	7.142	905
1330	212.259	211.824		0.16	0.16	1.31	1.04	0.36	83	84	71	2.87	2	75	0.039	105	104	152.1	0.58	0.84	6.46	126.6	183.0	177.8	56.1	182.7	160	71	71	71	0.025	1.001	6.971	884
1331	212.420	211.983		0.16	0.16	1.31	1.03	0.36	83	84	71	2.87	2	75	0.043	101	100	152.6	-0.45	0.80	4.80	126.5	182.9	177.8	56.1	182.6	159	71	71	71	0.025	1.001	6.649	842
1332	212.580	212.142		0.16	0.16	1.31	1.04	0.36	83	84	71	2.87	2	75	0.044	99	99	152.4	0.19	0.82	2.27	126.4	182.9	177.7	56.1	182.5	160	71	71	71	0.025	1.001	6.815	863
1333	212.741	212.301		0.16	0.16	1.31	1.03	0.36	83	84	71	2.87	2	76	0.041	103	102	152.1	0.27	0.78	4.35	126.3	182.9	177.7	56.1	182.4	158	71	71	71	0.025	1.001	6.488	821
1334	212.901	212.459		0.16	0.16	1.32	1.04	0.36	83	84	71	2.87	2	75	0.045	98	97	152.5	-0.36	0.84	3.65	126.3	182.7	177.6	56.1	182.4	158	71	71	71	0.023	1.001	6.972	882
1335	213.061	212.619		0.16	0.16	1.31	1.03	0.36	83	84	71	2.86	2	75	0.044	99	99	152.1	0.37	0.88	5.19	126.3	182.6	177.6	56.0	182.3	159	71	71	71	0.023	1.001	7.296	922
1336	213.221	212.777		0.16	0.16	1.30	1.04	0.36	83	84	71	2.86	2	76	0.041	103	102	152.3	-0.21	0.82	3.92	126.1	182.6	177.5	56.1	182.2	156	71	71	71	0.022	1.001	6.810	860
1337	213.381	212.937		0.16	0.16	1.30	1.03	0.36	83	84	71	2.87	2	75	0.045	98	98	152.6	-0.31	0.84	5.55	126.1	182.6	177.4	56.1	182.1	158	71	71	71	0.022	1.001	6.977	880
1338	213.541	213.095		0.16	0.16	1.31	1.04	0.36	83	84	71	2.87	2	75	0.041	103	101	152.9	-0.30	0.80	3.62	125.9	182.4	177.3	56.1	182.0	155	71	71	71	0.023	1.001	6.653	839
1339	213.701	213.254		0.16	0.16	1.31	1.03	0.36	83	84	71	2.86	2	76	0.045	98	98	152.7	0.29	0.84	6.51	125.9	182.3	177.3	56.1	182.0	156	71	71	71	0.022	1.001	6.972	879
1340	213.862	213.413		0.16	0.16	1.31	1.03	0.36	83	84	71	2.86	2	75	0.043	101	100	152.6	0.03	0.86	4.80	125.8	182.2	177.3	56.1	181.9	153	71	71	71	0.022	1.001	7.136	899
1341	214.022	213.571		0.16	0.16	1.30	1.03	0.36	83	84	71	2.86	2	76	0.045	98	97	152.4	0.19	0.84	5.97	125.7	182.2	177.2	56.1	181.8	152	71	71	71	0.021	1.001	6.970	877
1342	214.181	213.730		0.16	0.16	1.31	1.04	0.36	83	84	71	2.86	2	76	0.041	102	102	152.2	0.27	0.82	3.73	125.6	182.1	177.1	56.1	181.7	151	71	71	71	0.021	1.001	6.807	856
1343	214.342	213.890		0.16	0.16	1.31	1.03	0.36	83	84	71	2.87	2	76	0.042	102	102	152.7	-0.53	0.82	7.15	125.6	182.0	177.1	56.1	181.7	152	71	71	71	0.021	1.001	6.806	856
1344	214.502	214.048		0.16	0.16	1.31	1.03	0.36	83	84	71	2.87	2	76	0.045	98	97	152.8	-0.07	0.87	6.55	125.4	181.9	176.9	56.1	181.5	150	71	71	71	0.020	1.001	7.292	916
1345	214.662	214.208		0.16	0.16	1.31	1.04	0.36	83	84	71	2.87	2	76	0.043	100	100	152.6	0.17	0.80	7.66	125.3	181.8	176.8	56.2	181.5	153	71	71	71	0.021	1.001	6.645	834
1346	214.822	214.366		0.16	0.16	1.31	1.03	0.36	83	84	71	2.88	2	76	0.043	100	99	153.0	-0.44	0.80	6.47	125.2	181.7	176.7	56.1	181.3	149	71	71	71	0.020	1.001	6.647	833
1347	214.983	214.524		0.16	0.16	1.32	1.03	0.36	83	84	71	2.86	2	76	0.044	100	98	152.7	0.38	0.89	7.17	125.2	181.7	176.6	56.1	181.3	149	72	71	71	0.020	1.001	7.459	935
1348	215.143	214.684		0.16	0.16	1.32	1.03	0.36	83	84	71	2.88	2	76	0.041	103	103	152.6	0.04	0.82	6.69	125.1	181.5	176.5	56.1	181.2	147	72	71	71	0.020	1.001	6.814	853
1349	215.304	214.842		0.16	0.16	1.31	1.03	0.36	83	84	71	2.87	2	76	0.043	101	99	152.5	0.13	0.86	8.23	125.0	181.5	176.5	56.2	181.1	150	72	71	71	0.019	1.001	7.134	893
1350	215.464	215.001		0.16	0.16	1.31	1.04	0.36	83	84	71	2.87	2	76	0.042	102	101	152.4	0.09	0.78	6.62	124.7	181.3	176.3	56.2	180.9	146	72	71	71	0.019	1.001	6.486	810
1351	215.624	215.160		0.16	0.16	1.31	1.03	0.36	83	84	71	2.86	2	77	0.043	100	100	152.9	-0.46	0.82	5.21	124.7	181.3	176.2	56.2	180.9	147	72	71	71	0.019	1.001	6.811	850
1352	215.784	215.318		0.16	0.16	1.30	1.04	0.36	83	84	71	2.86	2	76	0.045	98	97	153.1	-0.28	0.83	6.11	124.6	181.1	176.1	56.2	180.8	143	72	71	71	0.018	1.001	6.947	866
1353	215.944	215.478		0.16	0.16	1.31	1.04	0.36	83	84	71	2.86	2	76	0.043	100	100	152.5	0.64	0.83	8.71	124.5	181.1	176.0	56.2	180.7	146	72	71	71	0.018	1.001	6.914	862
1354	216.103	215.636		0.16	0.16	1.30	1.03	0.36	83	84	71	2.88	2	77	0.041	102	102	152.5	0.00	0.84	7.13	124.4	180.9	175.9	56.2	180.6	144	72	72	71	0.018	1.001	6.965	867

Elapsed Time	Particulate Sampling Data																Fuel Weight, lb		Flow, gpm		Temperature Data, oF												
	Gas Meter Cubic Feet (1)	Gas Meter Cubic Feet (2)	Gas Meter Cubic Feet (amb)	Sample Rate, cfm (1)	Sample Rate, cfm (2)	Orifice dH (1)	Orifice dH (2)	Orifice dH (amb)	Meter oF (1)	Meter oF (2)	Meter oF (amb)	Meter Vac. In. Hg. (1)	Meter Vac. In. Hg. (2)	Dilution Tunnel Temp.	Dilution Tunnel dP	Pro. Rate (%) (1)	Pro. Rate (%) (2)	Scale Reading	Weight Change	Load Side Liquid Flow Rate	Boiler Side Liquid Flow Rate (optional)	Thermopile ΔT	Boiler to Heat Exch. Temp.	Heat Exch to Boiler Temp.	Inlet Load Temp.	Outlet Load Temp.	Stack	Filter (1)	Filter (2)	Ambient		Specific Heat of Inlet Water (BTU/lb-°F)	Mass Flow Rate of Inlet Water (lb/min)	Heat Output, Btu
1355	216.264	215.795		0.16	0.16	1.31	1.03	0.36	83	84	71	2.88	2	76	0.043	101	100	153.1	-0.62	0.82	9.99	124.2	180.8	175.9	56.3	180.5	140	72	72	71	0.018	1.001	6.807	846
1356	216.424	215.954		0.16	0.16	1.31	1.03	0.36	83	84	71	2.87	2	76	0.043	100	100	152.7	0.45	0.82	10.15	124.1	180.7	175.6	56.2	180.3	142	72	72	71	0.018	1.001	6.812	846
1357	216.584	216.113		0.16	0.16	1.31	1.03	0.36	83	84	71	2.87	2	77	0.044	99	99	153.0	-0.28	0.84	7.73	124.0	180.6	175.6	56.2	180.2	143	72	72	71	0.018	1.001	6.967	865
1358	216.743	216.272		0.16	0.16	1.31	1.04	0.36	83	84	71	2.87	2	76	0.043	100	100	152.9	0.00	0.82	5.91	123.9	180.5	175.5	56.2	180.1	141	72	72	71	0.017	1.001	6.803	844
1359	216.904	216.430		0.16	0.16	1.31	1.03	0.36	83	84	72	2.87	2	76	0.042	102	100	153.1	-0.17	0.80	4.61	123.8	180.4	175.3	56.3	180.0	141	72	72	72	0.017	1.001	6.646	824
1360	217.064	216.589		0.16	0.16	1.31	1.03	0.36	83	84	72	2.87	2	76	0.045	98	98	152.5	0.66	0.82	10.24	123.6	180.3	175.2	56.2	179.9	139	72	72	72	0.017	1.001	6.803	842
1361	217.224	216.748		0.16	0.16	1.31	1.03	0.36	83	84	72	2.87	2	77	0.042	102	101	152.2	0.29	0.82	10.42	123.6	180.1	175.1	56.2	179.8	138	72	72	72	0.018	1.001	6.809	842
1362	217.383	216.906		0.16	0.16	1.30	1.02	0.36	83	84	72	2.91	2	92	0.042	102	102	152.0	0.12	0.85	8.31	123.4	180.0	174.9	56.2	179.6	140	72	72	72	0.016	1.001	7.125	880
1363	217.544	217.063		0.16	0.16	1.30	1.03	0.36	83	84	72	2.89	2	77	0.043	101	99	152.2	-0.20	0.84	6.63	123.3	180.0	174.8	56.2	179.5	154	74	73	72	0.037	1.001	6.969	861
1364	217.704	217.222		0.16	0.16	1.31	1.03	0.36	83	84	72	2.87	2	76	0.040	104	103	151.9	0.34	0.80	11.82	123.3	179.9	174.8	56.2	179.5	152	72	72	72	0.023	1.001	6.645	820
1365	217.864	217.381		0.16	0.16	1.31	1.04	0.36	83	84	72	2.87	2	76	0.042	102	101	152.0	-0.10	0.80	7.38	123.2	179.7	174.7	56.3	179.5	149	72	72	72	0.021	1.001	6.646	820
1366	218.024	217.540		0.16	0.16	1.31	1.03	0.36	83	84	72	2.87	2	76	0.041	103	102	152.0	0.01	0.76	4.81	123.1	179.6	174.6	56.2	179.3	147	72	72	72	0.020	1.001	6.322	779
1367	218.184	217.698		0.16	0.16	1.31	1.04	0.36	83	84	72	2.86	2	76	0.045	98	97	151.9	0.08	0.78	6.48	123.0	179.5	174.5	56.2	179.2	145	72	72	72	0.019	1.001	6.482	798
1368	218.344	217.857		0.16	0.16	1.30	1.03	0.36	83	84	72	2.86	2	76	0.042	102	101	151.5	0.36	0.80	9.55	122.9	179.4	174.4	56.2	179.1	143	72	72	72	0.018	1.001	6.645	817
1369	218.503	218.016		0.16	0.16	1.31	1.03	0.36	83	84	72	2.87	2	76	0.043	100	100	152.2	-0.65	0.84	6.14	122.7	179.3	174.2	56.2	178.9	143	72	72	72	0.017	1.001	6.978	857
1370	218.664	218.175		0.16	0.16	1.30	1.03	0.36	84	84	72	2.87	2	76	0.045	99	98	152.2	-0.02	0.78	6.69	122.6	179.2	174.2	56.2	178.8	139	72	72	72	0.017	1.001	6.506	799
1371	218.824	218.334		0.16	0.16	1.30	1.04	0.36	83	84	72	2.86	2	77	0.045	98	98	151.8	0.46	0.88	10.34	122.6	179.1	174.2	56.2	178.8	139	72	72	72	0.017	1.001	7.309	897
1372	218.984	218.493		0.16	0.16	1.31	1.03	0.36	83	84	71	2.86	2	76	0.041	103	102	152.6	-0.86	0.86	10.42	122.4	179.0	174.0	56.2	178.6	138	72	72	71	0.017	1.001	7.144	875
1373	219.144	218.651		0.16	0.16	1.31	1.04	0.36	83	84	71	2.87	2	77	0.043	100	99	152.0	0.57	0.80	8.11	122.2	178.9	174.0	56.3	178.5	137	72	72	71	0.017	1.001	6.658	815
1374	219.304	218.812		0.16	0.16	1.31	1.04	0.36	84	84	71	2.86	2	77	0.042	101	102	151.6	0.44	0.84	9.07	122.0	178.8	173.8	56.4	178.4	137	72	72	71	0.016	1.001	6.981	853
1375	219.465	218.970		0.16	0.16	1.31	1.04	0.36	84	84	71	2.87	2	77	0.042	102	100	151.5	0.13	0.86	11.61	122.1	178.6	173.7	56.2	178.3	135	72	72	71	0.016	1.001	7.141	873
1376	219.625	219.129		0.16	0.16	1.31	1.04	0.36	84	84	71	2.86	2	76	0.046	97	96	151.4	0.10	0.80	10.72	121.9	178.5	173.6	56.2	178.1	133	72	72	71	0.016	1.001	6.663	813
1377	219.785	219.288		0.16	0.16	1.31	1.04	0.36	84	84	71	2.87	2	76	0.043	100	100	151.5	-0.13	0.84	9.48	121.8	178.4	173.4	56.2	178.0	134	72	72	71	0.016	1.001	6.981	851
1378	219.946	219.447		0.16	0.16	1.32	1.04	0.36	84	84	71	2.86	2	76	0.043	101	100	151.8	-0.28	0.84	9.06	121.8	178.3	173.3	56.2	177.9	134	72	72	71	0.016	1.001	6.974	850
1379	220.106	219.606		0.16	0.16	1.31	1.03	0.36	84	84	71	2.86	2	76	0.044	99	99	152.1	-0.28	0.78	7.21	121.6	178.1	173.2	56.2	177.7	133	72	72	71	0.015	1.001	6.493	790
1380	220.267	219.765		0.16	0.16	1.31	1.04	0.36	84	84	71	2.86	2	76	0.044	100	99	152.0	0.07	0.84	9.50	121.5	178.1	173.2	56.2	177.7	133	72	72	71	0.015	1.001	6.961	847
1381	220.428	219.924		0.16	0.16	1.31	1.04	0.36	84	84	71	2.87	2	76	0.047	96	95	152.4	-0.37	0.84	6.01	121.5	177.9	173.0	56.1	177.6	130	72	72	71	0.015	1.001	6.992	850
1382	220.588	220.084		0.16	0.16	1.31	1.03	0.36	84	84	71	2.87	2	76	0.044	99	99	151.6	0.72	0.80	10.64	121.4	177.8	173.0	56.1	177.5	131	72	72	71	0.014	1.001	6.652	809
1383	220.748	220.242		0.16	0.16	1.31	1.04	0.36	84	84	71	2.87	2	76	0.045	98	97	151.5	0.18	0.84	9.06	121.2	177.7	172.8	56.2	177.3	131	72	72	71	0.015	1.001	7.024	852
1384	220.908	220.401		0.16	0.16	1.30	1.03	0.36	84	84	71	2.86	2	75	0.046	97	96	151.3	0.15	0.88	11.64	121.0	177.6	172.7	56.2	177.2	128	72	72	71	0.014	1.001	7.355	891
1385	221.069	220.561		0.16	0.16	1.30	1.03	0.36	84	84	71	2.86	2	75	0.043	101	100	151.9	-0.55	0.84	14.37	120.9	177.4	172.5	56.2	177.1	129	72	72	71	0.014	1.001	6.971	844
1386	221.229	220.719		0.16	0.16	1.31	1.04	0.36	84	84	71	2.87	2	75	0.045	98	97	151.8	0.02	0.78	9.07	120.8	177.3	172.5	56.2	177.0	126	72	72	71	0.014	1.001	6.487	785
1387	221.389	220.878		0.16	0.16	1.30	1.04	0.36	84	84	71	2.87	2	75	0.044	99	99	151.5	0.35	0.86	13.15	120.7	177.2	172.3	56.2	176.9	125	72	72	71	0.014	1.001	7.133	862
1388	221.549	221.038		0.16	0.16	1.31	1.04	0.36	84	84	71	2.86	2	75	0.047	96	96	151.7	-0.25	0.84	10.12	120.6	177.1	172.2	56.2	176.8	127	72	72	71	0.014	1.001	6.976	842
1389	221.709	221.196		0.16	0.16	1.31	1.04	0.36	84	84	71	2.87	2	75	0.044	99	98	152.0	-0.22	0.82	11.89	120.4	176.9	172.0	56.2	176.6	124	72	72	71	0.014	1.001	6.814	821
1390	221.870	221.356		0.16	0.16	1.31	1.04	0.36	84	84	71	2.86	2	75	0.042	102	102	151.9	0.02	0.80	11.63	120.3	176.8	172.1	56.2	176.5	126	72	72	71	0.014	1.001	6.646	801
1391	222.030	221.515		0.16	0.16	1.31	1.04	0.36	84	84	71	2.87	2	75	0.044	99	99	151.9	0.04	0.84	12.91	120.3	176.7	171.9	56.1	176.4	125	72	71	71	0.014	1.001	6.972	840
1392	222.190	221.673		0.16	0.16	1.31	1.04	0.36	84	84	71	2.87	2	75	0.044	99	98	151.7	0.21	0.84	13.36	120.1	176.5	171.6	56.1	176.2	124	72	71	71	0.013	1.001	6.973	838
1393	222.350	221.833		0.16	0.16	1.30	1.03	0.36	84	84	71	2.88	2	87	0.044	100	100	151.0	0.65	0.76	12.94	120.0	176.6	171.7	56.1	176.1	124	72	71	71	0.013	1.001	6.325	760
1394	222.510	221.990		0.16	0.16	1.31	1.04	0.36	84	84	71	2.86	2	76	0.044	99	97	150.8	0.28	0.89	14.51	119.8	176.3	171.4	56.1	175.9	148	73	73	71	0.026	1.001	7.459	895
1395	222.670	222.149		0.16	0.16	1.31	1.04	0.36	84	84	71	2.87	2	75	0.043	100	100	150.9	-0.15	0.82	11.96	119.8	176.2	171.4	56.1	175.9	143	71	71	71	0.019	1.001	6.815	818
1396	222.830	222.309		0.16	0.16	1.31	1.04	0.36	84	84	71	2.87	2	75	0.040	104	104	151.4	-0.47	0.82	11.64	119.7	176.2	171.2	56.1	175.8	140	72	71	71	0.017	1.001	6.813	817
1397	222.991	222.468		0.16	0.16	1.31	1.04	0.36	84	84	71	2.86	2	75	0.046	97	96	151.3	0.09	0.86	14.81	119.6	176.1	171.2	56.1	175.7	137	72	71	71	0.017	1.001	7.140	855
1398	223.152	222.627		0.16	0.16	1.32	1.04	0.36	84	84	71	2.86	2	75	0.039	106	105	151.4	-0.07	0.84	11.33	119.5	175.9	171.0	56.1	175.6	135	72	71	71	0.016	1.001	6.979	835
1399	223.312	222.786		0.16	0.16	1.30	1.03	0.36	84	84	71	2.87	2	75	0.048	95	94	151.1	0.23	0.76	8.40	119.4	175.8	170.9	56.1	175.5	132	72	71	71	0.015	1.001	6.325	756
1400	223.472	222.945		0.16	0.16	1.31	1.04	0.36	84	84	71	2.86	2	75	0.043	100	100	151.6	-0.45	0.86	12.91	119.2	175.6	170.7	56.1	175.3	131	72	71	71	0.014	1.001	7.135	852
1401	223.632	223.105		0.16	0.16	1.31	1.03	0.36	84	84	71	2.87	2	75	0.045	98	98	151.1	0.52	0.80	15.42	119.1	175.5	170.6	56.1	175.2	129	72	71	71	0.014	1.001	6.649	793
1402	223.793	223.263		0.16	0.16	1.30	1.04	0.36	84	84	71	2.87	2	75	0.042	102	100	151.3	-0.27	0.84	11.71	119.0	175.4	170.6	56.1	175.1	127	72	71	71	0.014	1.001	6.974	831
1403	223.953	223.422		0.16	0.16	1.30	1.04	0.36	84	84	71	2.87	2	75	0.045	98	97	151.1	0.25	0.76	15.44	118.9	175.3	170.5	56.1	175.0	127	71	71	71	0.014	1.001	6.324	753
1404	224.113	223.582		0.16	0.16	1.31	1.04	0.36	84	84	71	2.86	2	75	0.041	102	103	150.6	0.44	0.84	12.92	118.6	175.1	170.3	56.1	174.8	125	71	71	71	0.013	1.001	6.973	828
1405	224.273	223.740		0.16	0.16	1.31	1.04	0.36	84	84	71	2.87	2	75	0.043	100	99	151.5	-0.83	0.84	11.63	118.6	175.0	170.3	56.1	174.7	125	71	71	71	0.014	1.001	6.978	828
1406	224.433	223.899		0.16	0.16	1.31	1.04	0.36	84	84	71	2.87	2	75	0.044	99	99	151.2	0.29	0.88	9.82	118.5	174.9	170.1	56.1	174.6	124	71	71	71	0.013	1.001	7.297	865
1407	224.594	224.059		0.16	0.16	1.31	1.03	0.36	84	84	71	2.86	2	75	0.044	100	99	151.1	0.07	0.88	15.42	118.4	174.8	170.0	56.1	174.5	123	71	71	71	0.013	1.001	7.296	865
1408	224.754	224.217		0.16	0.16	1.31	1.04	0.36	84	84	71	2.86	2	75	0.045	98	97	150.8	0.31	0.84	14.31	118.4	174.7	169.8	56.0	174.4	123	71	71	71	0.013	1.001	6.985	828
1409	224.914	224.377		0.16	0.16	1.31	1.04	0.36	84	84	71	2.86	2	75	0.042	101	102	151.0	-0.21	0.84	14.20	118.2	174.5	169.6	56.0	174.2	123	71	71	71	0.013	1.001	6.977	825
1410	225.074	224.536		0.16	0.16	1.31	1.03	0.36	84	84	71	2.86	2	75	0.044	99	99	151.3	-0.25	0.78	14.34	118.0	174.3	169.5	56.0	174.0	122	71	71	71	0.013	1.001	6.524	771
1411	225.235	224.695		0.16	0.16	1.31	1.04	0.36	84	84	71	2.86	2	75	0.044	100	99	151.2	0.02	0.82	14.20	117.9	174.2	169.4	56.0	173.9	120	71	71	71	0.012	1.001	6.871	811
1412	225.395	224.855		0.16	0.16	1.31	1.04	0.36	84	84	71	2.87	2	75	0.046	97	97	151.1	0.09	0.82	13.16	117.8	174.2	169.4	56.1	173.8	122	71	71	71	0.012	1.001	6.813	803
1413	225.555	225.013		0.16	0.16	1.32	1.04	0.36	84	84	71	2.86	2	75	0.041	102	101	151.1	0.06	0.83	15.43	117.5	174.0	169.2	56.1	173.6	120	71	71	71	0.012	1.001	6.906	813
1414	225.716	225.172		0.16	0.16	1.32	1.04	0.36	84	84	71	2.86	2	75	0.043	101	100	151.1	-0.04	0.80	13.95	117.5	173.9	168.9	56.1	173.5	119	71	71	71	0.012	1.001	6.658	783
1415	225.876	225.332		0.16	0.16	1.32	1.03	0.36	84	84	71	2.85	2	75	0.044	99	99	150.7	0.42	0.88	12.95	117.4	173.7	168.9	56.0	173.4	119	71	71	71	0.012	1.001	7.302	858
1416	226.037	225.490		0.16	0.16	1.31	1.04	0.36	83	84	71	2.86	2	75	0.044	100	98	151.1	-0.44	0.82	11.94	117.3	173.7	168.8	56.1	173.4	120	71	71	71	0.012	1.001	6.816	800

Elapsed Time	Particulate Sampling Data																Fuel Weight, lb		Flow, gpm		Temperature Data, oF												
	Gas Meter Cubic Feet (1)	Gas Meter Cubic Feet (2)	Gas Meter Cubic Feet (amb)	Sample Rate, cfm (1)	Sample Rate, cfm (2)	Orifice dH (1)	Orifice dH (2)	Orifice dH (amb)	Meter oF (1)	Meter oF (2)	Meter oF (amb)	Meter Vac. In. Hg. (1)	Meter Vac. In. Hg. (2)	Dilution Tunnel Temp.	Dilution Tunnel dP	Pro. Rate (%) (1)	Pro. Rate (%) (2)	Scale Reading	Weight Change	Load Side Liquid Flow Rate	Boiler Side Liquid Flow Rate (optional)	Thermopile ΔT	Boiler to Heat Exch. Temp.	Heat Exch to Boiler Temp.	Inlet Load Temp.	Outlet Load Temp.	Stack	Filter (1)	Filter (2)	Ambient		Specific Heat of Inlet Water (BTU/lb-°F)	Mass Flow Rate of Inlet Water (lb/min)	Heat Output, Btu
1417	226.198	225.649		0.16	0.16	1.30	1.04	0.36	83	84	71	2.86	2	75	0.045	99	97	151.0	0.09	0.86	14.18	117.1	173.5	168.7	56.1	173.2	119	71	71	71	0.012	1.001	7.142	837
1418	226.358	225.809		0.16	0.16	1.31	1.03	0.36	83	84	71	2.87	2	74	0.045	98	98	151.0	0.02	0.80	12.92	117.0	173.4	168.6	56.1	173.0	119	71	71	71	0.011	1.001	6.654	779
1419	226.518	225.967		0.16	0.16	1.31	1.04	0.36	84	84	71	2.86	2	75	0.041	102	101	150.8	0.20	0.80	12.95	116.9	173.2	168.5	56.0	172.9	118	71	71	71	0.012	1.001	6.652	778
1420	226.678	226.127		0.16	0.16	1.30	1.04	0.36	83	84	71	2.86	2	75	0.040	104	104	151.0	-0.22	0.86	15.51	116.7	173.1	168.4	56.1	172.7	118	71	71	71	0.011	1.001	7.141	834
1421	226.839	226.286		0.16	0.16	1.31	1.03	0.36	83	84	71	2.87	2	75	0.043	101	100	150.6	0.44	0.84	14.25	116.6	173.0	168.3	56.1	172.7	117	71	71	71	0.011	1.001	6.978	814
1422	226.999	226.445		0.16	0.16	1.30	1.04	0.36	83	84	71	2.87	2	75	0.044	99	99	150.7	-0.11	0.82	15.46	116.4	172.8	168.2	56.1	172.5	118	71	71	71	0.011	1.001	6.818	795
1423	227.159	226.605		0.16	0.16	1.30	1.04	0.36	83	84	71	2.87	2	75	0.042	101	102	150.7	0.03	0.84	14.18	116.3	172.7	168.0	56.1	172.3	116	71	71	71	0.011	1.001	6.979	813
1424	227.319	226.762		0.16	0.16	1.31	1.03	0.36	83	84	71	2.88	2	81	0.043	101	99	150.4	0.28	0.78	15.37	116.2	172.6	167.9	56.0	172.2	117	71	71	71	0.011	1.001	6.493	755
1425	227.479	226.921		0.16	0.16	1.31	1.04	0.36	83	84	71	2.87	2	75	0.045	98	97	150.6	-0.22	0.82	15.48	116.1	172.6	167.9	56.1	172.2	139	72	72	71	0.019	1.001	6.820	793
1426	227.639	227.081		0.16	0.16	1.32	1.04	0.36	83	84	71	2.86	2	75	0.046	97	97	150.6	0.01	0.84	15.58	116.0	172.3	167.7	56.1	172.1	136	71	71	71	0.017	1.001	6.981	811
1427	227.799	227.239		0.16	0.16	1.31	1.04	0.36	83	84	71	2.86	2	75	0.043	100	99	151.0	-0.41	0.82	14.13	116.0	172.4	167.7	56.0	172.0	132	71	71	71	0.015	1.001	6.815	791
1428	227.960	227.399		0.16	0.16	1.32	1.04	0.36	83	84	71	2.87	2	75	0.044	100	99	150.5	0.54	0.82	14.15	115.7	172.1	167.5	56.0	171.8	130	71	71	71	0.015	1.001	6.820	790
1429	228.120	227.558		0.16	0.16	1.32	1.03	0.36	83	84	71	2.87	2	75	0.044	99	99	150.4	0.05	0.82	15.44	115.7	172.1	167.4	56.0	171.7	128	71	71	71	0.014	1.001	6.820	790
1430	228.280	227.716		0.16	0.16	1.31	1.04	0.36	83	84	71	2.86	2	75	0.045	98	97	150.6	-0.15	0.78	15.52	115.5	171.9	167.3	56.0	171.6	126	71	71	71	0.014	1.001	6.495	751
1431	228.440	227.877		0.16	0.16	1.32	1.04	0.36	83	84	71	2.87	2	75	0.041	103	103	150.6	0.00	0.76	15.45	115.4	171.8	167.2	56.0	171.4	125	71	71	71	0.013	1.001	6.331	731
1432	228.601	228.035		0.16	0.16	1.31	1.03	0.36	83	84	71	2.87	2	74	0.046	97	96	150.6	-0.01	0.86	15.50	115.3	171.6	167.1	56.0	171.3	123	71	71	71	0.013	1.001	7.141	824
1433	228.762	228.194		0.16	0.16	1.31	1.04	0.36	83	84	71	2.86	2	74	0.045	99	97	150.7	-0.14	0.80	15.55	115.1	171.5	166.9	56.0	171.2	122	71	71	71	0.013	1.001	6.654	767
1434	228.922	228.354		0.16	0.16	1.31	1.04	0.36	83	84	71	2.86	2	74	0.042	101	101	150.8	-0.10	0.84	15.49	115.0	171.4	166.8	56.0	171.1	121	71	71	71	0.012	1.001	6.982	804
1435	229.083	228.512		0.16	0.16	1.30	1.04	0.36	83	84	71	2.87	2	74	0.044	100	98	150.7	0.17	0.82	15.54	114.9	171.3	166.6	56.0	170.9	119	71	71	71	0.012	1.001	6.817	784
1436	229.243	228.671		0.16	0.16	1.31	1.04	0.36	83	84	71	2.86	2	75	0.045	98	97	150.1	0.53	0.85	15.54	114.8	171.1	166.5	56.1	170.8	119	71	71	71	0.012	1.001	7.114	817
1437	229.403	228.831		0.16	0.16	1.31	1.04	0.36	83	84	71	2.87	2	74	0.044	99	99	150.8	-0.62	0.84	15.47	114.6	171.0	166.3	56.0	170.6	119	71	71	71	0.012	1.001	6.999	803
1438	229.564	228.989		0.16	0.16	1.31	1.04	0.36	83	84	71	2.87	2	74	0.046	97	96	150.6	0.14	0.78	15.53	114.5	170.8	166.2	56.0	170.6	117	71	71	71	0.012	1.001	6.493	744
1439	229.724	229.149		0.16	0.16	1.31	1.04	0.36	83	84	71	2.87	2	75	0.043	100	100	151.0	-0.32	0.82	15.50	114.3	170.7	166.1	56.1	170.4	117	71	71	71	0.011	1.001	6.836	782
1440	229.884	229.308		0.16	0.16	1.31	1.03	0.36	83	84	71	2.86	2	74	0.045	98	97	150.3	0.67	0.80	15.49	114.2	170.6	166.0	56.0	170.3	117	71	71	71	0.011	1.001	6.654	761
1441	230.045	229.467		0.16	0.16	1.30	1.04	0.36	83	84	71	2.87	2	75	0.044	100	99	150.9	-0.62	0.80	15.50	114.2	170.5	166.0	56.0	170.2	115	71	71	71	0.011	1.001	6.687	764
1442	230.205	229.627		0.16	0.16	1.31	1.04	0.36	83	84	71	2.86	2	74	0.043	100	100	150.8	0.11	0.82	15.50	114.0	170.4	165.9	56.0	170.1	115	71	71	71	0.011	1.001	6.847	782
1443	230.365	229.785		0.16	0.16	1.32	1.04	0.36	83	84	71	2.87	2	75	0.043	100	99	151.0	-0.22	0.82	15.53	113.8	170.2	165.6	56.0	169.8	115	71	71	71	0.011	1.001	6.871	783
1444	230.526	229.944		0.16	0.16	1.31	1.04	0.36	83	84	71	2.87	2	75	0.044	100	99	150.6	0.44	0.82	15.60	113.6	170.0	165.4	56.0	169.7	114	71	71	71	0.011	1.001	6.842	778
1445	230.686	230.104		0.16	0.16	1.31	1.04	0.36	83	84	71	2.87	2	75	0.044	99	99	150.6	-0.07	0.80	15.52	113.6	169.9	165.3	56.0	169.6	114	71	71	71	0.011	1.001	6.652	757
1446	230.846	230.263		0.16	0.16	1.31	1.04	0.36	83	84	71	2.86	2	74	0.043	100	100	150.9	-0.26	0.86	15.48	113.5	169.8	165.2	56.0	169.5	114	71	71	71	0.011	1.001	7.136	811
1447	231.006	230.422		0.16	0.16	1.31	1.04	0.36	83	84	71	2.87	2	75	0.042	101	101	150.6	0.26	0.86	15.53	113.3	169.6	165.0	56.0	169.4	113	71	71	71	0.011	1.001	7.139	810
1448	231.167	230.581		0.16	0.16	1.32	1.04	0.36	83	84	71	2.86	2	75	0.042	102	101	150.7	-0.02	0.82	15.56	113.2	169.5	165.0	56.0	169.3	112	71	71	71	0.010	1.001	6.830	774
1449	231.327	230.740		0.16	0.16	1.31	1.04	0.36	83	84	71	2.86	2	75	0.042	101	101	150.6	0.10	0.84	15.46	113.1	169.4	164.8	56.0	169.1	113	71	71	71	0.010	1.001	6.978	790
1450	231.487	230.899		0.16	0.16	1.31	1.04	0.36	83	84	71	2.87	2	75	0.045	98	97	150.4	0.16	0.82	15.53	113.0	169.3	164.6	56.0	169.0	111	71	71	71	0.010	1.001	6.814	771
1451	231.648	231.059		0.16	0.16	1.32	1.04	0.36	83	84	71	2.87	2	74	0.039	106	105	150.1	0.32	0.80	15.53	112.8	169.1	164.5	56.0	168.8	110	71	71	71	0.010	1.001	6.654	751
1452	231.808	231.217		0.16	0.16	1.31	1.04	0.36	83	84	71	2.87	2	74	0.043	100	99	150.7	-0.58	0.80	15.54	112.7	169.1	164.5	56.1	168.8	111	71	71	71	0.010	1.001	6.655	751
1453	231.969	231.377		0.16	0.16	1.32	1.04	0.36	83	84	71	2.86	2	75	0.043	101	100	150.2	0.43	0.84	15.52	112.5	168.8	164.3	56.1	168.6	111	71	71	71	0.009	1.001	6.981	786
1454	232.129	231.536		0.16	0.16	1.30	1.04	0.36	83	84	70	2.86	2	75	0.043	100	100	150.6	-0.37	0.78	15.54	112.4	168.7	164.1	56.1	168.4	111	71	71	70	0.009	1.001	6.494	730
1455	232.290	231.694		0.16	0.16	1.31	1.04	0.36	83	84	71	2.86	2	79	0.043	101	99	150.7	-0.12	0.80	15.49	112.2	168.6	164.1	56.1	168.3	114	71	71	71	0.011	1.001	6.655	748
1456	232.450	231.854		0.16	0.16	1.31	1.04	0.36	83	84	71	2.87	2	75	0.047	96	96	150.2	0.52	0.80	15.57	112.1	168.5	163.9	56.0	168.2	135	71	71	71	0.015	1.001	6.656	747
1457	232.610	232.013		0.16	0.16	1.30	1.04	0.36	83	84	71	2.86	2	75	0.045	98	97	150.6	-0.40	0.80	15.40	112.1	168.4	163.8	56.0	168.1	131	71	71	71	0.014	1.001	6.658	747
1458	232.771	232.172		0.16	0.16	1.31	1.04	0.36	83	84	71	2.87	2	74	0.046	97	96	150.4	0.20	0.88	15.48	112.0	168.4	163.8	56.0	168.0	128	71	71	71	0.014	1.001	7.306	819
1459	232.931	232.332		0.16	0.16	1.31	1.04	0.36	83	84	71	2.87	2	75	0.046	97	97	150.2	0.24	0.88	15.48	111.7	168.2	163.6	56.1	167.9	126	71	71	71	0.013	1.001	7.300	817
1460	233.092	232.490		0.16	0.16	1.31	1.04	0.36	83	84	71	2.87	2	75	0.043	101	99	150.4	-0.26	0.82	15.50	111.7	168.0	163.5	56.0	167.8	124	71	71	71	0.013	1.001	6.813	762
1461	233.252	232.650		0.16	0.16	1.31	1.04	0.36	83	84	70	2.86	2	75	0.042	101	102	150.8	-0.36	0.84	15.45	111.7	168.0	163.5	56.0	167.7	123	71	71	70	0.013	1.001	6.977	780
1462	233.412	232.809		0.16	0.16	1.31	1.04	0.36	83	84	70	2.87	2	75	0.040	104	103	151.0	-0.23	0.82	15.47	111.5	167.8	163.3	56.0	167.5	121	71	71	70	0.012	1.001	6.817	761
1463	233.573	232.968		0.16	0.16	1.32	1.04	0.36	83	84	71	2.86	2	75	0.045	99	97	150.4	0.59	0.82	15.56	111.4	167.6	163.2	56.0	167.3	120	71	71	71	0.012	1.001	6.815	760
1464	233.733	233.128		0.16	0.16	1.32	1.04	0.36	83	84	71	2.86	2	74	0.044	99	99	150.6	-0.23	0.82	15.54	111.2	167.5	163.1	56.0	167.2	117	71	71	71	0.011	1.001	6.816	759
1465	233.893	233.287		0.16	0.16	1.31	1.04	0.36	83	84	71	2.86	2	75	0.044	99	99	150.5	0.18	0.82	15.53	111.0	167.4	162.9	56.1	167.1	118	71	71	71	0.012	1.001	6.818	758
1466	234.053	233.446		0.16	0.16	1.32	1.04	0.36	83	84	71	2.87	2	75	0.044	99	99	150.3	0.12	0.86	15.51	111.0	167.2	162.8	56.0	167.0	116	71	71	71	0.011	1.001	7.137	793
1467	234.214	233.606		0.16	0.16	1.31	1.04	0.36	83	84	71	2.86	2	75	0.044	100	99	150.8	-0.46	0.80	15.51	110.8	167.2	162.7	56.0	166.8	116	71	71	71	0.010	1.001	6.651	738
1468	234.374	233.764		0.16	0.16	1.32	1.04	0.36	83	84	71	2.87	2	74	0.044	99	98	150.5	0.29	0.84	15.51	110.7	167.0	162.5	56.0	166.7	116	71	71	71	0.011	1.001	6.977	773
1469	234.534	233.923		0.16	0.16	1.32	1.04	0.36	83	84	71	2.87	2	74	0.044	99	98	151.1	-0.62	0.89	15.57	110.6	166.9	162.4	56.0	166.6	115	71	71	71	0.010	1.001	7.441	824
1470	234.695	234.083		0.16	0.16	1.32	1.04	0.36	83	84	71	2.87	2	74	0.045	99	98	150.3	0.82	0.87	15.50	110.4	166.7	162.3	56.0	166.4	114	71	71	71	0.010	1.001	7.269	803
1471	234.855	234.242		0.16	0.16	1.32	1.04	0.36	83	84	71	2.86	2	74	0.046	97	96	150.1	0.18	0.82	15.48	110.3	166.7	162.3	56.0	166.4	114	71	71	71	0.010	1.001	6.812	753
1472	235.016	234.401		0.16	0.16	1.32	1.04	0.36	83	84	71	2.87	2	74	0.046	97	96	150.1	0.02	0.76	15.55	110.2	166.5	162.1	56.0	166.2	113	71	71	71	0.010	1.001	6.358	701
1473	235.177	234.561		0.16	0.16	1.32	1.04	0.36	83	84	71	2.86	2	74	0.044	100	99	150.3	-0.15	0.83	15.55	110.0	166.4	162.1	56.0	166.0	114	71	71	71	0.010	1.001	6.926	763
1474	235.337	234.720		0.16	0.16	1.31	1.04	0.36	83	84	71	2.86	2	74	0.044	99	98	151.0	-0.76	0.85	15.48	109.8	166.2	161.8	56.1	165.9	112	71	71	71	0.010	1.001	7.121	783
1475	235.498	234.880		0.16	0.16	1.31	1.04	0.36	83	84	71	2.87	2	74	0.044	100	99	150.5	0.49	0.81	15.50	109.7	166.1	161.7	56.1	165.8	112	71	71	71	0.010	1.001	6.737	740
1476	235.658	235.039		0.16	0.16	1.31	1.03	0.36	83	84	71	2.86	2	75	0.044	99	99	150.7	-0.15	0.83	15.59	109.6	166.0	161.5	56.0	165.6	111	71	71	71	0.009	1.001	6.906	758
1477	235.818	235.198		0.16	0.16	1.31	1.04	0.36	83	84	71	2.87	2	74	0.044	99	98	150.7	-0.05	0.80	15.46	109.5	165.8	161.4	56.0	165.5	110	71	71	71	0.010	1.001	6.655	730
1478	235.979	235.358		0.16	0.16	1.31	1.04	0.36	83	84	71	2.86	2	74	0.043	101	100	150.2	0.55	0.82	15.51	109.4	165.7	161.3	56.0	165.4	110	71	71	71	0.009	1.001	6.816	747

Elapsed Time	Particulate Sampling Data																Fuel Weight, lb		Flow, gpm		Temperature Data, oF												
	Gas Meter Cubic Feet (1)	Gas Meter Cubic Feet (2)	Gas Meter Cubic Feet (amb)	Sample Rate, cfm (1)	Sample Rate, cfm (2)	Orifice dH (1)	Orifice dH (2)	Orifice dH (amb)	Meter oF (1)	Meter oF (2)	Meter oF (amb)	Meter Vac. In. Hg. (1)	Meter Vac. In. Hg. (2)	Dilution Tunnel Temp.	Dilution Tunnel dP	Pro. Rate (%) (1)	Pro. Rate (%) (2)	Scale Reading	Weight Change	Load Side Liquid Flow Rate	Boiler Side Liquid Flow Rate (optional)	Thermopile ΔT	Boiler to Heat Exch. Temp.	Heat Exch to Boiler Temp.	Inlet Load Temp.	Outlet Load Temp.	Stack	Filter (1)	Filter (2)	Ambient		Specific Heat of Inlet Water (BTU/lb-°F)	Mass Flow Rate of Inlet Water (lb/min)	Heat Output, Btu
1479	236.139	235.516		0.16	0.16	1.30	1.04	0.36	83	84	71	2.87	2	74	0.041	103	101	150.8	-0.59	0.88	15.57	109.2	165.5	161.1	56.0	165.2	111	71	71	71	0.009	1.001	7.301	798
1480	236.299	235.675		0.16	0.16	1.31	1.04	0.36	83	84	71	2.87	2	74	0.045	98	97	150.4	0.41	0.78	15.44	109.1	165.4	161.1	56.0	165.1	109	71	71	71	0.010	1.001	6.492	709
1481	236.459	235.835		0.16	0.16	1.31	1.04	0.36	83	84	71	2.87	2	74	0.044	99	99	150.3	0.09	0.78	15.49	109.0	165.3	160.9	56.0	165.0	110	71	71	71	0.010	1.001	6.493	708
1482	236.619	235.994		0.16	0.16	1.31	1.04	0.36	83	84	71	2.86	2	74	0.044	99	98	150.2	0.11	0.82	15.62	108.8	165.2	160.9	56.0	164.9	109	71	71	71	0.009	1.001	6.817	743
1483	236.780	236.153		0.16	0.16	1.31	1.04	0.36	83	84	71	2.87	2	74	0.044	100	98	151.0	-0.81	0.90	15.54	108.7	165.1	160.8	56.1	164.8	108	71	71	71	0.009	1.001	7.465	813
1484	236.940	236.313		0.16	0.16	1.31	1.04	0.36	83	84	71	2.87	2	75	0.043	100	100	150.0	0.98	0.82	15.57	108.5	164.9	160.6	56.1	164.6	109	71	71	71	0.009	1.001	6.817	741
1485	237.100	236.472		0.16	0.16	1.31	1.03	0.36	83	83	71	2.86	2	76	0.044	99	99	150.5	-0.53	0.82	15.60	108.5	164.7	160.5	56.0	164.5	108	71	71	71	0.009	1.001	6.818	740
1486	237.260	236.631		0.16	0.16	1.31	1.04	0.36	83	84	71	2.86	2	77	0.044	99	99	150.4	0.16	0.90	15.51	108.4	164.7	160.4	56.0	164.4	126	71	71	71	0.027	1.001	7.467	810
1487	237.421	236.790		0.16	0.16	1.32	1.04	0.36	83	84	71	2.86	2	75	0.046	98	96	150.0	0.37	0.84	15.50	108.2	164.6	160.2	56.0	164.2	130	71	71	71	0.014	1.001	6.980	757
1488	237.581	236.949		0.16	0.16	1.32	1.05	0.36	83	84	71	2.86	2	74	0.038	107	106	150.6	-0.62	0.78	15.50	108.2	164.5	160.1	56.0	164.2	127	71	71	71	0.013	1.001	6.492	703
1489	237.741	237.109		0.16	0.16	1.31	1.04	0.36	83	84	71	2.87	2	75	0.040	104	104	150.2	0.40	0.82	15.53	108.1	164.4	160.1	56.0	164.1	124	71	71	71	0.013	1.001	6.819	738
1490	237.902	237.268		0.16	0.16	1.32	1.04	0.36	83	84	71	2.87	2	74	0.041	103	102	150.0	0.27	0.80	15.45	107.9	164.3	159.9	56.0	163.9	122	71	71	71	0.012	1.001	6.654	719
1491	238.062	237.427		0.16	0.16	1.32	1.04	0.36	83	84	71	2.86	2	75	0.042	101	101	151.3	-1.31	0.88	15.56	107.7	164.0	159.7	56.0	163.7	120	71	71	71	0.012	1.001	7.304	788
1492	238.223	237.587		0.16	0.16	1.32	1.04	0.36	83	83	71	2.87	2	74	0.044	100	99	150.1	1.16	0.80	15.46	107.6	163.9	159.5	56.0	163.6	119	71	71	71	0.011	1.001	6.656	717
1493	238.384	237.746		0.16	0.16	1.31	1.04	0.36	83	83	71	2.86	2	75	0.045	99	98	150.5	-0.42	0.86	15.42	107.4	163.8	159.4	56.1	163.5	116	71	71	71	0.011	1.001	7.142	768
1494	238.544	237.905		0.16	0.16	1.31	1.04	0.36	83	83	71	2.87	2	74	0.043	100	100	150.9	-0.35	0.84	15.57	107.3	163.6	159.3	56.1	163.4	116	71	71	71	0.011	1.001	6.985	750
1495	238.704	238.065		0.16	0.16	1.31	1.04	0.36	83	83	71	2.86	2	75	0.043	100	101	150.9	-0.02	0.76	15.56	107.2	163.6	159.3	56.1	163.3	114	71	71	71	0.011	1.001	6.335	680
1496	238.865	238.224		0.16	0.16	1.31	1.04	0.36	83	83	71	2.86	2	74	0.047	96	95	150.5	0.41	0.80	15.56	107.1	163.5	159.1	56.0	163.1	114	71	71	71	0.010	1.001	6.656	714
1497	239.025	238.383		0.16	0.16	1.31	1.04	0.36	83	83	71	2.86	2	74	0.043	100	100	149.7	0.81	0.86	15.39	107.0	163.3	159.0	56.0	163.0	114	71	71	71	0.010	1.001	7.140	765
1498	239.185	238.543		0.16	0.16	1.31	1.04	0.36	83	83	71	2.87	2	75	0.046	97	97	150.4	-0.73	0.80	15.52	106.9	163.1	158.8	56.0	162.8	113	71	71	71	0.010	1.001	6.657	712
1499	239.345	238.702		0.16	0.16	1.31	1.04	0.36	83	83	71	2.87	2	74	0.044	99	99	150.0	0.42	0.78	15.46	106.8	163.0	158.7	56.0	162.7	112	71	71	71	0.010	1.001	6.503	695
1500	239.505	238.861		0.16	0.16	1.31	1.05	0.36	83	83	71	2.86	2	74	0.045	98	98	149.9	0.12	0.86	15.58	106.7	162.9	158.6	56.0	162.6	112	71	71	71	0.010	1.001	7.147	763
1501	239.666	239.021		0.16	0.16	1.31	1.04	0.36	83	83	71	2.87	2	75	0.044	100	99	151.1	-1.25	0.86	15.47	106.6	162.9	158.5	56.0	162.5	110	71	71	71	0.009	1.001	7.143	762
1502	239.826	239.180		0.16	0.16	1.31	1.04	0.36	83	83	71	2.86	2	75	0.042	101	101	150.7	0.42	0.84	15.51	106.4	162.7	158.4	56.0	162.4	110	71	71	71	0.009	1.001	6.984	744
1503	239.987	239.340		0.16	0.16	1.32	1.05	0.36	83	83	71	2.87	2	75	0.043	101	101	150.8	-0.06	0.81	15.44	106.3	162.5	158.2	56.0	162.3	109	71	71	71	0.009	1.001	6.775	721
1504	240.147	239.499		0.16	0.16	1.31	1.04	0.36	83	83	71	2.86	2	74	0.044	99	99	149.5	1.28	0.81	15.50	106.1	162.4	158.1	56.0	162.1	110	71	71	71	0.009	1.001	6.793	722
1505	240.307	239.658		0.16	0.16	1.31	1.04	0.36	83	83	71	2.87	2	75	0.045	98	98	150.9	-1.45	0.76	15.48	105.9	162.2	157.9	56.0	162.0	108	71	71	71	0.010	1.001	6.340	672
1506	240.467	239.818		0.16	0.16	1.32	1.04	0.36	83	83	71	2.87	2	74	0.044	99	99	149.9	1.05	0.85	15.50	105.8	162.2	157.8	56.0	161.9	109	71	71	71	0.009	1.001	7.094	752
1507	240.628	239.977		0.16	0.16	1.32	1.04	0.36	83	83	71	2.87	2	75	0.043	101	100	151.3	-1.42	0.88	15.57	105.7	162.1	157.8	56.1	161.8	108	71	71	71	0.009	1.001	7.305	773
1508	240.788	240.136		0.16	0.16	1.32	1.04	0.36	83	83	71	2.86	2	74	0.045	98	98	149.5	1.85	0.82	15.54	105.5	161.9	157.6	56.0	161.6	107	71	71	71	0.009	1.001	6.827	721
1509	240.949	240.296		0.16	0.16	1.32	1.04	0.36	83	83	71	2.87	2	74	0.047	96	96	149.3	0.19	0.84	15.49	105.4	161.8	157.5	56.1	161.5	106	71	71	71	0.009	1.001	6.988	737
1510	241.109	240.455		0.16	0.16	1.32	1.04	0.36	83	83	71	2.87	2	75	0.041	103	102	150.7	-1.41	0.84	15.47	105.3	161.6	157.4	56.1	161.4	106	71	71	71	0.009	1.001	6.984	736
1511	241.270	240.614		0.16	0.16	1.32	1.04	0.36	83	83	71	2.86	2	74	0.042	102	101	150.1	0.60	0.78	15.55	105.2	161.5	157.3	56.1	161.2	107	71	71	71	0.008	1.001	6.497	684
1512	241.431	240.774		0.16	0.16	1.32	1.04	0.36	83	83	71	2.87	2	74	0.042	102	102	150.6	-0.55	0.84	15.54	105.0	161.4	157.1	56.1	161.1	105	71	71	71	0.008	1.001	6.997	736
1513	241.591	240.933		0.16	0.16	1.30	1.04	0.36	83	83	71	2.87	2	75	0.042	101	101	150.0	0.67	0.76	15.55	104.8	161.2	157.0	56.1	160.9	105	71	71	71	0.009	1.001	6.336	665
1514	241.751	241.092		0.16	0.16	1.31	1.05	0.36	83	83	71	2.87	2	75	0.041	103	102	150.6	-0.64	0.82	15.53	104.9	161.1	156.9	56.0	160.9	105	71	71	71	0.008	1.001	6.823	716
1515	241.911	241.252		0.16	0.16	1.31	1.04	0.36	83	83	71	2.86	2	74	0.043	100	100	150.2	0.46	0.82	15.53	104.8	161.0	156.8	56.0	160.8	105	71	71	71	0.009	1.001	6.823	716
1516	242.072	241.411		0.16	0.16	1.30	1.04	0.36	83	83	71	2.88	2	77	0.043	101	100	150.6	-0.46	0.86	15.59	104.4	160.7	156.5	56.0	160.5	105	71	71	71	0.008	1.001	7.147	747
1517	242.232	241.571		0.16	0.16	1.31	1.04	0.36	83	83	71	2.87	2	76	0.047	96	96	149.8	0.85	0.78	15.59	104.5	160.8	156.6	56.0	160.5	129	71	71	71	0.025	1.001	6.499	680
1518	242.392	241.730		0.16	0.16	1.31	1.03	0.36	83	83	71	2.86	2	75	0.046	97	97	150.5	-0.73	0.86	15.47	104.3	160.7	156.5	56.1	160.4	125	71	71	71	0.013	1.001	7.147	746
1519	242.552	241.889		0.16	0.16	1.31	1.04	0.36	83	83	71	2.87	2	74	0.044	99	99	150.0	0.47	0.74	15.38	104.2	160.6	156.4	56.0	160.3	122	71	71	71	0.012	1.001	6.172	644
1520	242.712	242.049		0.16	0.16	1.31	1.04	0.36	83	83	71	2.86	2	74	0.042	101	102	149.8	0.21	0.72	15.49	104.1	160.4	156.2	56.0	160.1	119	71	71	71	0.011	1.001	6.009	626
1521	242.873	242.208		0.16	0.16	1.32	1.04	0.36	83	83	71	2.87	2	74	0.043	101	100	149.7	0.10	0.82	15.45	104.0	160.3	156.2	56.0	160.0	117	71	71	71	0.011	1.001	6.822	710
1522	243.033	242.367		0.16	0.16	1.32	1.04	0.36	83	83	71	2.87	2	75	0.045	98	98	150.6	-0.92	0.86	15.53	103.9	160.2	156.1	56.0	159.9	116	71	71	71	0.010	1.001	7.145	743
1523	243.193	242.527		0.16	0.16	1.32	1.04	0.36	83	83	71	2.86	2	74	0.042	101	102	150.5	0.17	0.76	15.49	103.6	160.0	155.9	56.1	159.7	114	71	71	71	0.010	1.001	6.337	658
1524	243.353	242.686		0.16	0.16	1.32	1.04	0.36	83	83	71	2.87	2	75	0.046	97	97	150.1	0.40	0.88	15.59	103.6	159.9	155.7	56.0	159.6	114	71	71	71	0.011	1.001	7.306	758
1525	243.514	242.845		0.16	0.16	1.32	1.04	0.36	83	83	71	2.86	2	75	0.047	96	96	149.7	0.34	0.80	15.48	103.4	159.8	155.7	56.1	159.5	113	71	71	71	0.010	1.001	6.655	689
1526	243.674	243.005		0.16	0.16	1.32	1.04	0.36	83	83	71	2.87	2	81	0.043	101	101	149.6	0.13	0.86	15.57	103.4	159.6	155.4	56.0	159.4	112	71	71	71	0.010	1.001	7.142	739
1527	243.834	243.163		0.16	0.16	1.32	1.04	0.36	83	83	71	2.88	2	86	0.044	100	99	148.0	1.63	0.78	15.50	103.3	159.6	155.5	56.0	159.3	129	71	71	71	0.027	1.001	6.497	672
1528	243.994	243.322		0.16	0.16	1.32	1.04	0.36	83	83	71	2.87	2	89	0.042	103	102	147.8	0.14	0.82	15.55	103.4	159.8	155.6	56.0	159.4	162	72	71	71	0.028	1.001	6.822	707
1529	244.155	243.481		0.16	0.16	1.32	1.04	0.36	83	83	71	2.88	2	92	0.045	100	99	146.2	1.62	0.84	15.41	103.8	160.2	156.0	56.0	159.8	183	72	71	71	0.030	1.001	6.981	726
1530	244.315	243.639		0.16	0.16	1.32	1.04	0.36	83	83	71	2.88	2	97	0.044	101	100	144.5	1.75	0.84	15.64	104.5	160.9	156.7	56.0	160.5	205	72	71	71	0.036	1.001	6.979	730
1531	244.475	243.799		0.16	0.16	1.32	1.04	0.36	83	83	71	2.88	2	100	0.042	104	104	143.6	0.90	0.84	15.56	105.3	161.9	157.5	56.0	161.3	229	73	72	71	0.042	1.001	6.980	736
1532	244.634	243.957		0.16	0.16	1.32	1.04	0.36	83	83	71	2.88	2	102	0.044	101	101	142.7	0.89	0.78	15.53	106.3	162.9	158.5	56.0	162.3	244	73	72	71	0.040	1.001	6.497	691
1533	244.794	244.115		0.16	0.16	1.32	1.04	0.36	83	83	71	2.89	2	104	0.040	107	106	141.8	0.89	0.82	15.50	107.2	163.7	159.4	56.0	163.2	254	73	72	71	0.044	1.001	6.815	732
1534	244.953	244.274		0.16	0.16	1.32	1.04	0.36	83	83	71	2.88	2	105	0.041	105	105	140.5	1.22	0.88	15.46	108.2	165.0	160.6	56.1	164.3	259	74	72	71	0.043	1.001	7.305	792
1535	245.113	244.431		0.16	0.16	1.32	1.04	0.36	83	83	71	2.89	2	107	0.043	103	102	139.1	1.46	0.84	15.61	109.4	165.9	161.4	56.0	165.3	263	74	73	71	0.043	1.001	6.963	762
1536	245.273	244.591		0.16	0.16	1.31	1.04	0.36	83	83	71	2.89	2	108	0.041	106	106	138.5	0.56	0.80	15.59	110.6	167.2	162.6	56.0	166.6	266	74	73	71	0.045	1.001	6.673	739
1537	245.432	244.748		0.16	0.16	1.32	1.04	0.36	83	83	71	2.91	2	109	0.043	103	102	137.5	1.06	0.80	15.54	111.7	168.4	163.7	56.0	167.8	269	74	73	71	0.042	1.001	6.654	744
1538	245.591	244.906		0.16	0.16	1.31	1.03	0.36	83	83	71	2.91	2	111	0.041	105	105	136.0	1.49	0.82	15.46	113.2	169.8	165.1	56.0	169.2	273	75	74	71	0.047	1.001	6.816	772
1539	245.750	245.064		0.16	0.16	1.31	1.03	0.36	83	83	71	2.91	2	112	0.041	105	105	134.7	1.27	0.82	15.53	114.4	171.1	166.4	56.1	170.5	277	75	74	71	0.048	1.001	6.855	785
1540	245.910	245.221		0.16	0.16	1.31	1.03	0.36	83	83	71	2.92	2	113	0.043	104	102	133.4	1.28	0.84	14.24	115.6	172.5	167.5	56.0	171.7	281	76	75	71	0.046	1.001	6.980	808

Elapsed Time	Particulate Sampling Data																Fuel Weight, lb		Flow, gpm		Temperature Data, oF												
	Gas Meter Cubic Feet (1)	Gas Meter Cubic Feet (2)	Gas Meter Cubic Feet (amb)	Sample Rate, cfm (1)	Sample Rate, cfm (2)	Orifice dH (1)	Orifice dH (2)	Orifice dH (amb)	Meter oF (1)	Meter oF (2)	Meter oF (amb)	Meter Vac. In. Hg. (1)	Meter Vac. In. Hg. (2)	Dilution Tunnel Temp.	Dilution Tunnel dP	Pro. Rate (%) (1)	Pro. Rate (%) (2)	Scale Reading	Weight Change	Load Side Liquid Flow Rate	Boiler Side Liquid Flow Rate (optional)	Thermopile ΔT	Boiler to Heat Exch. Temp.	Heat Exch to Boiler Temp.	Inlet Load Temp.	Outlet Load Temp.	Stack	Filter (1)	Filter (2)	Ambient		Specific Heat of Inlet Water (BTU/lb-°F)	Mass Flow Rate of Inlet Water (lb/min)	Heat Output, Btu
1541	246.069	245.378		0.16	0.16	1.31	1.02	0.36	83	83	71	2.92	2	114	0.042	104	103	132.2	1.24	0.81	14.14	117.3	174.1	169.2	56.0	173.4	285	77	75	71	0.051	1.001	6.740	792
1542	246.228	245.534		0.16	0.16	1.31	1.02	0.36	83	83	71	2.93	2	114	0.043	103	102	131.0	1.17	0.84	14.25	118.3	175.0	170.2	56.1	174.3	289	77	76	71	0.053	1.001	6.976	826
1543	246.387	245.692		0.16	0.16	1.29	1.02	0.36	83	83	71	2.93	2	115	0.039	108	108	129.7	1.27	0.85	11.69	119.7	176.4	171.5	56.0	175.8	290	78	76	71	0.051	1.001	7.090	850
1544	246.545	245.848		0.16	0.16	1.29	1.01	0.36	83	83	71	2.94	2	116	0.043	103	102	127.9	1.82	0.78	14.20	121.0	177.8	172.8	56.0	177.0	293	78	77	71	0.051	1.001	6.491	786
1545	246.703	246.005		0.16	0.16	1.30	1.01	0.36	83	83	71	2.95	2	115	0.042	104	103	127.0	0.88	0.84	9.70	122.4	179.2	174.1	56.0	178.4	294	79	77	71	0.050	1.001	6.974	854
1546	246.861	246.160		0.16	0.16	1.30	1.00	0.36	83	83	71	2.94	2	116	0.041	105	103	125.9	1.14	0.80	8.12	123.7	180.5	175.4	56.0	179.8	294	79	78	71	0.050	1.001	6.655	824
1547	247.020	246.316		0.16	0.16	1.30	1.00	0.36	83	83	71	2.96	2	116	0.041	106	104	124.8	1.11	0.80	3.68	125.0	181.7	176.5	56.1	181.1	295	80	78	71	0.049	1.001	6.652	832
1548	247.178	246.471		0.16	0.16	1.30	1.01	0.36	83	83	71	2.94	2	102	0.044	100	99	124.7	0.09	0.82	7.18	125.7	182.4	177.2	56.1	181.8	296	80	78	71	0.047	1.001	6.816	858
1549	247.338	246.628		0.16	0.16	1.29	1.00	0.36	83	83	71	2.94	2	91	0.045	99	98	123.9	0.80	0.80	7.74	126.2	182.7	177.7	56.1	182.3	282	79	77	71	0.038	1.001	6.655	841
1550	247.496	246.783		0.16	0.16	1.29	1.00	0.36	83	83	71	2.94	2	87	0.043	100	98	123.7	0.24	0.82	5.20	126.4	183.0	177.9	56.1	182.5	253	77	76	71	0.037	1.001	6.812	862
1551	247.654	246.940		0.16	0.16	1.29	1.00	0.36	83	83	71	2.93	2	85	0.044	99	98	123.2	0.47	0.82	4.23	126.7	183.3	178.2	56.1	182.8	237	77	75	71	0.035	1.001	6.818	865
1552	247.813	247.095		0.16	0.16	1.29	1.00	0.36	83	83	71	2.93	2	84	0.045	98	96	122.8	0.35	0.80	3.91	126.8	183.5	178.3	56.2	183.0	227	77	75	71	0.034	1.001	6.653	845
1553	247.971	247.253		0.16	0.16	1.29	1.01	0.36	83	83	71	2.93	2	80	0.044	98	99	122.5	0.30	0.90	2.64	127.1	183.7	178.6	56.1	183.2	220	77	74	71	0.033	1.001	7.465	950
1554	248.130	247.409		0.16	0.16	1.29	1.01	0.36	83	83	71	2.94	2	80	0.045	98	96	122.4	0.12	0.82	2.69	127.2	183.8	178.5	56.1	183.4	216	76	73	71	0.034	1.001	6.818	868
1555	248.289	247.566		0.16	0.16	1.29	1.01	0.36	83	83	71	2.92	2	79	0.045	98	97	122.3	0.16	0.84	7.80	127.4	183.9	178.6	56.1	183.5	212	75	73	71	0.033	1.001	6.981	890
1556	248.448	247.723		0.16	0.16	1.30	1.01	0.36	83	83	71	2.92	2	79	0.045	98	97	121.9	0.34	0.82	2.27	127.5	184.0	178.8	56.1	183.6	208	74	73	71	0.033	1.001	6.817	870
1557	248.608	247.880		0.16	0.16	1.30	1.02	0.36	83	83	71	2.91	2	78	0.044	99	98	121.7	0.25	0.84	5.56	127.5	184.0	178.8	56.1	183.6	205	74	73	71	0.032	1.001	6.977	891
1558	248.767	248.038		0.16	0.16	1.30	1.02	0.36	83	83	71	2.90	2	77	0.042	101	101	121.8	-0.14	0.82	1.10	127.5	184.1	179.0	56.1	183.7	202	74	73	71	0.032	1.001	6.818	871
1559	248.927	248.195		0.16	0.16	1.29	1.02	0.36	83	83	71	2.91	2	76	0.042	102	100	121.7	0.13	0.80	4.27	127.5	184.1	179.0	56.2	183.7	200	74	73	71	0.031	1.001	6.654	850
1560	249.086	248.354		0.16	0.16	1.30	1.03	0.36	83	83	71	2.90	2	76	0.039	105	105	121.9	-0.24	0.84	4.54	127.6	184.2	179.0	56.1	183.8	199	74	73	71	0.031	1.001	6.981	892
1561	249.245	248.512		0.16	0.16	1.30	1.03	0.36	83	83	71	2.90	2	76	0.045	97	97	121.8	0.11	0.84	3.92	127.6	184.2	179.0	56.1	183.7	198	73	73	71	0.034	1.001	6.980	892
1562	249.405	248.670		0.16	0.16	1.30	1.03	0.36	83	83	71	2.90	2	76	0.042	102	101	121.6	0.18	0.82	2.50	127.7	184.1	179.1	56.0	183.8	196	73	73	71	0.035	1.001	6.814	871
1563	249.564	248.829		0.16	0.16	1.30	1.03	0.36	83	84	71	2.88	2	76	0.042	101	101	121.3	0.35	0.78	3.92	127.7	184.2	179.0	56.1	183.8	194	73	73	71	0.036	1.001	6.495	830
1564	249.724	248.987		0.16	0.16	1.31	1.04	0.36	83	84	71	2.89	2	76	0.044	99	98	121.5	-0.19	0.82	4.80	127.6	184.1	179.0	56.1	183.7	191	73	72	71	0.036	1.001	6.821	872
1565	249.884	249.147		0.16	0.16	1.31	1.04	0.36	83	84	71	2.87	2	76	0.044	99	99	121.2	0.29	0.80	3.93	127.6	184.1	179.0	56.1	183.7	189	73	72	71	0.036	1.001	6.659	851
1566	250.044	249.306		0.16	0.16	1.31	1.04	0.36	83	84	71	2.86	2	76	0.043	100	100	121.4	-0.18	0.82	5.87	127.6	184.1	178.9	56.1	183.7	188	73	72	71	0.036	1.001	6.811	870
1567	250.204	249.465		0.16	0.16	1.31	1.04	0.36	83	84	71	2.88	2	76	0.047	96	95	120.7	0.71	0.82	5.20	127.6	184.1	179.0	56.1	183.7	185	73	72	71	0.036	1.001	6.815	870
1568	250.364	249.624		0.16	0.16	1.31	1.04	0.36	83	83	71	2.86	2	76	0.043	100	100	121.2	-0.51	0.85	6.49	127.5	184.0	178.9	56.1	183.6	184	73	72	71	0.036	1.001	7.104	907
1569	250.525	249.782		0.16	0.16	1.32	1.03	0.36	83	84	71	2.88	2	76	0.046	98	96	121.0	0.17	0.85	4.25	127.6	184.1	178.8	56.1	183.7	181	73	72	71	0.035	1.001	7.107	908
1570	250.685	249.941		0.16	0.16	1.31	1.04	0.36	83	84	71	2.87	2	75	0.046	97	96	120.9	0.10	0.81	3.91	127.4	183.9	178.6	56.1	183.5	180	73	72	71	0.034	1.001	6.758	862
1571	250.846	250.101		0.16	0.16	1.31	1.03	0.36	83	84	71	2.86	2	75	0.045	99	98	120.6	0.35	0.85	5.95	127.4	183.9	178.7	56.1	183.5	178	73	72	71	0.034	1.001	7.048	899
1572	251.006	250.259		0.16	0.16	1.31	1.04	0.36	83	84	71	2.88	2	75	0.044	99	98	120.9	-0.33	0.85	2.63	127.4	183.8	178.6	56.1	183.5	176	73	72	71	0.033	1.001	7.123	908
1573	251.166	250.419		0.16	0.16	1.31	1.03	0.36	83	84	71	2.87	2	75	0.044	99	99	121.1	-0.21	0.90	3.69	127.3	183.8	178.5	56.1	183.4	176	72	72	71	0.032	1.001	7.469	952
1574	251.326	250.578		0.16	0.16	1.30	1.03	0.36	83	84	71	2.86	2	75	0.040	104	103	120.7	0.35	0.82	3.31	127.3	183.7	178.5	56.1	183.3	173	72	72	71	0.032	1.001	6.819	869
1575	251.486	250.736		0.16	0.16	1.31	1.04	0.36	83	84	71	2.88	2	75	0.044	99	98	120.4	0.31	0.84	7.81	127.2	183.6	178.5	56.0	183.2	171	72	72	71	0.031	1.001	6.984	889
1576	251.646	250.896		0.16	0.16	1.31	1.03	0.36	83	84	71	2.86	2	75	0.047	96	96	120.6	-0.15	0.80	3.50	127.2	183.6	178.5	56.0	183.2	168	72	72	71	0.031	1.001	6.657	848
1577	251.806	251.054		0.16	0.16	1.31	1.04	0.36	83	84	71	2.87	2	75	0.045	98	97	120.5	0.06	0.86	2.63	127.1	183.5	178.3	56.0	183.1	168	72	72	71	0.030	1.001	7.146	909
1578	251.966	251.213		0.16	0.16	1.31	1.04	0.36	83	84	71	2.88	2	75	0.042	101	101	120.5	-0.02	0.82	4.18	127.0	183.4	178.3	56.1	183.0	169	72	72	71	0.030	1.001	6.821	867
1579	252.126	251.373		0.16	0.16	1.31	1.03	0.36	83	84	71	2.88	2	75	0.043	100	100	121.0	-0.45	0.86	4.59	126.9	183.3	178.2	56.1	182.9	165	72	72	71	0.029	1.001	7.145	908
1580	252.286	251.531		0.16	0.16	1.31	1.03	0.36	83	84	71	2.86	2	75	0.043	100	99	120.9	0.03	0.82	7.77	126.7	183.3	178.2	56.2	182.9	166	72	72	71	0.029	1.001	6.824	866
1581	252.446	251.690		0.16	0.16	1.31	1.04	0.36	83	84	71	2.88	2	75	0.041	103	102	121.0	-0.06	0.84	2.45	126.7	183.2	178.0	56.1	182.8	166	72	72	71	0.028	1.001	6.983	886
1582	252.606	251.849		0.16	0.16	1.31	1.03	0.36	83	84	71	2.87	2	75	0.042	101	101	119.7	1.27	0.84	4.83	126.6	183.1	178.0	56.1	182.7	161	72	72	71	0.028	1.001	6.986	886
1583	252.766	252.008		0.16	0.16	1.32	1.03	0.36	83	84	71	2.88	2	75	0.042	101	101	121.3	-1.57	0.82	5.56	126.6	183.0	177.9	56.1	182.6	161	72	72	71	0.028	1.001	6.819	864
1584	252.926	252.168		0.16	0.16	1.31	1.04	0.36	83	84	71	2.87	2	75	0.043	100	100	120.1	1.17	0.80	5.20	126.5	182.9	177.9	56.0	182.5	160	72	72	71	0.027	1.001	6.658	843
1585	253.087	252.326		0.16	0.16	1.31	1.04	0.36	83	84	71	2.87	2	75	0.045	99	97	121.4	-1.22	0.88	5.10	126.6	183.0	177.9	56.1	182.6	159	72	71	71	0.027	1.001	7.306	926
1586	253.247	252.485		0.16	0.16	1.30	1.04	0.36	83	84	71	2.87	2	75	0.045	98	97	121.0	0.34	0.80	9.00	126.4	182.8	177.8	56.1	182.4	158	72	71	71	0.027	1.001	6.654	842
1587	253.408	252.644		0.16	0.16	1.31	1.04	0.36	83	84	71	2.88	2	75	0.043	101	100	121.4	-0.40	0.82	8.85	126.3	182.8	177.7	56.0	182.4	158	72	71	71	0.026	1.001	6.822	863
1588	253.567	252.803		0.16	0.16	1.31	1.03	0.36	83	84	71	2.87	2	75	0.044	98	99	121.3	0.15	0.88	7.22	126.2	182.6	177.5	56.0	182.3	158	72	71	71	0.026	1.001	7.306	923
1589	253.728	252.962		0.16	0.16	1.32	1.04	0.36	83	84	71	2.87	2	75	0.043	101	100	120.8	0.42	0.84	4.80	126.2	182.6	177.5	56.0	182.2	154	72	71	71	0.025	1.001	6.980	882
1590	253.888	253.121		0.16	0.16	1.30	1.03	0.36	83	84	71	2.88	2	75	0.044	99	99	120.8	0.03	0.84	3.37	126.2	182.6	177.5	56.1	182.2	153	72	71	71	0.025	1.001	6.979	882
1591	254.048	253.279		0.16	0.16	1.30	1.04	0.36	83	84	71	2.87	2	75	0.045	98	97	120.9	-0.05	0.84	5.20	126.0	182.5	177.5	56.1	182.1	156	72	71	71	0.025	1.001	6.977	880
1592	254.207	253.439		0.16	0.16	1.31	1.03	0.36	83	84	71	2.86	2	75	0.045	97	98	121.3	-0.46	0.80	4.60	125.9	182.4	177.3	56.1	182.0	153	72	71	71	0.025	1.001	6.658	840
1593	254.367	253.597		0.16	0.16	1.31	1.03	0.36	83	84	71	2.86	2	75	0.044	99	98	120.8	0.52	0.80	5.18	125.8	182.3	177.1	56.0	181.9	152	72	71	71	0.024	1.001	6.657	839
1594	254.528	253.756		0.16	0.16	1.31	1.04	0.36	83	84	71	2.87	2	75	0.046	98	96	120.9	-0.11	0.82	4.19	125.8	182.2	177.1	56.0	181.8	154	72	71	71	0.023	1.001	6.822	859
1595	254.687	253.916		0.16	0.16	1.30	1.04	0.36	83	84	71	2.87	2	75	0.044	98	99	120.7	0.27	0.86	5.99	125.8	182.2	177.1	56.0	181.8	152	72	71	71	0.023	1.001	7.142	899
1596	254.847	254.074		0.16	0.16	1.31	1.03	0.36	83	84	71	2.88	2	75	0.043	100	99	121.3	-0.67	0.80	3.64	125.6	182.0	177.0	56.0	181.7	149	72	71	71	0.023	1.001	6.660	838
1597	255.008	254.233		0.16	0.16	1.31	1.04	0.36	83	84	71	2.88	2	75	0.041	103	102	120.7	0.63	0.84	8.04	125.5	181.9	177.0	56.1	181.6	149	72	71	71	0.023	1.001	6.982	877
1598	255.168	254.392		0.16	0.16	1.31	1.04	0.36	83	84	71	2.88	2	75	0.042	101	101	120.5	0.21	0.82	5.19	125.4	181.8	176.8	56.1	181.5	148	72	71	71	0.022	1.001	6.847	860
1599	255.328	254.551		0.16	0.16	1.31	1.03	0.36	83	84	71	2.87	2	75	0.046	97	96	120.7	-0.24	0.86	4.83	125.4	181.8	176.7	56.0	181.4	149	71	71	71	0.022	1.001	7.148	897
1600	255.488	254.711		0.16	0.16	1.31	1.03	0.36	83	84	71	2.86	2	75	0.045	98	98	120.9	-0.17	0.75	3.49	125.2	181.6	176.5	56.0	181.3	146	71	71	71	0.022	1.001	6.273	787
1601	255.648	254.869		0.16	0.16	1.31	1.04	0.36	83	84	71	2.86	2	75	0.042	101	100	120.8	0.05	0.82	8.40	125.2	181.5	176.4	56.0	181.2	146	71	71	71	0.022	1.001	6.815	854
1602	255.809	255.028		0.16	0.16	1.31	1.03	0.36	83	84	71	2.88	2	75	0.043	101	100	120.9	-0.05	0.82	11.65	125.1	181.5	176.4	56.0	181.1	150	71	71	71	0.022	1.001	6.817	854

Elapsed Time	Particulate Sampling Data																Fuel Weight, lb		Flow, gpm		Temperature Data, oF												
	Gas Meter Cubic Feet (1)	Gas Meter Cubic Feet (2)	Gas Meter Cubic Feet (amb)	Sample Rate, cfm (1)	Sample Rate, cfm (2)	Orifice dH (1)	Orifice dH (2)	Orifice dH (amb)	Meter oF (1)	Meter oF (2)	Meter oF (amb)	Meter Vac. In. Hg. (1)	Meter Vac. In. Hg. (2)	Dilution Tunnel Temp.	Dilution Tunnel dP	Pro. Rate (%) (1)	Pro. Rate (%) (2)	Scale Reading	Weight Change	Load Side Liquid Flow Rate	Boiler Side Liquid Flow Rate (optional)	Thermopile ΔT	Boiler to Heat Exch. Temp.	Heat Exch to Boiler Temp.	Inlet Load Temp.	Outlet Load Temp.	Stack	Filter (1)	Filter (2)	Ambient		Specific Heat of Inlet Water (BTU/lb-°F)	Mass Flow Rate of Inlet Water (lb/min)	Heat Output, Btu
1603	255.969	255.187		0.16	0.16	1.31	1.03	0.36	83	84	71	2.87	2	75	0.046	97	96	120.8	0.09	0.80	8.38	125.0	181.5	176.3	56.0	181.0	145	71	71	71	0.021	1.001	6.656	833
1604	256.129	255.345		0.16	0.16	1.31	1.03	0.36	83	84	71	2.87	2	75	0.044	99	98	120.8	0.00	0.81	8.99	124.9	181.4	176.3	56.0	181.0	143	71	71	71	0.021	1.001	6.719	840
1605	256.289	255.504		0.16	0.16	1.31	1.03	0.36	83	84	71	2.86	2	75	0.046	97	96	121.0	-0.22	0.88	3.86	124.8	181.2	176.2	56.0	180.8	145	71	71	71	0.021	1.001	7.305	913
1606	256.449	255.664		0.16	0.16	1.30	1.03	0.36	83	84	71	2.87	2	75	0.042	101	102	121.1	-0.04	0.82	6.50	124.7	181.1	176.1	56.1	180.7	142	71	71	71	0.020	1.001	6.817	851
1607	256.609	255.822		0.16	0.16	1.30	1.04	0.36	83	84	71	2.87	2	75	0.041	103	101	120.9	0.19	0.83	10.33	124.6	181.1	175.9	56.1	180.7	142	71	71	71	0.020	1.001	6.953	867
1608	256.769	255.982		0.16	0.16	1.30	1.03	0.36	83	84	71	2.87	2	75	0.045	98	98	121.0	-0.18	0.84	8.57	124.5	180.9	175.9	56.1	180.5	144	71	71	71	0.019	1.001	6.983	870
1609	256.929	256.140		0.16	0.16	1.31	1.03	0.36	83	84	71	2.88	2	75	0.042	101	100	121.3	-0.22	0.80	7.80	124.4	180.8	175.8	56.1	180.4	140	71	71	71	0.020	1.001	6.655	829
1610	257.089	256.299		0.16	0.16	1.31	1.04	0.36	83	84	71	2.87	2	75	0.045	98	97	120.5	0.74	0.80	7.76	124.3	180.6	175.7	56.0	180.3	139	71	71	71	0.019	1.001	6.659	829
1611	257.249	256.458		0.16	0.16	1.31	1.04	0.36	83	84	71	2.88	2	75	0.043	100	100	120.9	-0.41	0.84	7.04	124.1	180.5	175.6	56.0	180.2	141	71	71	71	0.019	1.001	6.981	868
1612	257.409	256.617		0.16	0.16	1.31	1.03	0.36	83	84	71	2.87	2	75	0.043	100	100	120.7	0.22	0.82	7.30	124.0	180.4	175.5	56.0	180.1	139	71	71	71	0.019	1.001	6.815	846
1613	257.569	256.776		0.16	0.16	1.31	1.03	0.36	83	84	71	2.86	2	75	0.042	101	101	120.9	-0.18	0.80	10.78	124.0	180.4	175.5	56.0	180.0	138	71	71	71	0.019	1.001	6.658	826
1614	257.729	256.935		0.16	0.16	1.31	1.04	0.36	83	84	71	2.88	2	75	0.042	101	101	121.2	-0.31	0.84	7.76	123.8	180.3	175.2	56.0	179.9	137	71	71	71	0.019	1.001	6.981	865
1615	257.889	257.093		0.16	0.16	1.31	1.04	0.36	83	84	71	2.87	2	75	0.041	103	101	121.0	0.25	0.88	8.26	123.7	180.2	175.2	56.0	179.8	138	71	71	71	0.018	1.001	7.307	905
1616	258.050	257.253		0.16	0.16	1.31	1.04	0.36	83	84	71	2.87	2	75	0.043	101	100	120.9	0.10	0.82	4.26	123.6	180.0	175.1	56.1	179.7	138	71	71	71	0.018	1.001	6.820	844
1617	258.210	257.412		0.16	0.16	1.31	1.03	0.36	83	84	71	2.88	2	75	0.045	98	97	120.8	0.01	0.82	7.74	123.5	179.9	175.0	56.1	179.6	137	71	71	71	0.018	1.001	6.819	843
1618	258.370	257.570		0.16	0.16	1.30	1.03	0.36	83	84	71	2.88	2	77	0.043	100	99	120.2	0.62	0.82	6.73	123.3	179.7	174.7	56.1	179.4	135	71	71	71	0.017	1.001	6.817	842
1619	258.530	257.729		0.16	0.16	1.30	1.03	0.36	83	84	71	2.89	2	79	0.044	99	99	120.6	-0.38	0.78	7.87	123.3	179.7	174.8	56.1	179.4	149	71	71	71	0.034	1.001	6.494	802
1620	258.690	257.887		0.16	0.16	1.31	1.03	0.36	83	84	71	2.88	2	75	0.043	100	99	121.0	-0.44	0.82	9.05	123.2	179.6	174.7	56.1	179.3	153	72	72	71	0.026	1.001	6.818	841
1621	258.850	258.046		0.16	0.16	1.31	1.04	0.36	83	84	71	2.86	2	75	0.043	100	100	120.3	0.74	0.84	11.60	123.1	179.6	174.6	56.0	179.2	149	71	71	71	0.023	1.001	6.980	861
1622	259.010	258.205		0.16	0.16	1.31	1.03	0.36	83	84	71	2.88	2	75	0.045	98	97	121.2	-0.87	0.78	9.11	123.0	179.4	174.6	56.0	179.0	146	71	71	71	0.021	1.001	6.495	800
1623	259.170	258.364		0.16	0.16	1.31	1.04	0.36	83	84	71	2.87	2	75	0.045	98	97	120.4	0.83	0.84	7.76	122.9	179.3	174.4	56.1	178.9	144	71	71	71	0.020	1.001	6.981	859
1624	259.330	258.524		0.16	0.16	1.31	1.04	0.36	83	84	71	2.87	2	75	0.041	103	103	120.3	0.01	0.88	11.66	122.8	179.3	174.3	56.0	178.9	143	71	71	71	0.019	1.001	7.305	898
1625	259.490	258.682		0.16	0.16	1.31	1.03	0.36	83	84	71	2.87	2	75	0.046	97	96	120.9	-0.52	0.80	6.51	122.7	179.1	174.2	56.0	178.7	139	71	71	71	0.019	1.001	6.661	818
1626	259.650	258.841		0.16	0.16	1.31	1.04	0.36	83	84	71	2.87	2	75	0.043	100	100	120.1	0.78	0.80	9.21	122.6	179.0	174.2	56.0	178.7	140	71	71	71	0.018	1.001	6.656	817
1627	259.810	259.001		0.16	0.16	1.31	1.04	0.36	83	84	71	2.87	2	75	0.046	97	97	120.3	-0.24	0.80	11.68	122.5	178.9	173.9	56.0	178.5	138	71	71	71	0.018	1.001	6.663	817
1628	259.970	259.159		0.16	0.16	1.31	1.03	0.36	83	84	71	2.88	2	75	0.045	98	97	120.4	-0.10	0.84	12.95	122.4	178.8	173.8	56.1	178.4	137	71	71	71	0.017	1.001	6.981	855
1629	260.130	259.318		0.16	0.16	1.31	1.04	0.36	83	84	71	2.86	2	75	0.042	101	101	120.3	0.15	0.78	10.35	122.3	178.7	173.7	56.0	178.3	136	71	71	71	0.017	1.001	6.507	797
1630	260.291	259.478		0.16	0.16	1.31	1.04	0.36	83	84	71	2.87	2	75	0.043	101	100	120.6	-0.34	0.82	11.63	122.1	178.5	173.6	56.0	178.2	134	71	71	71	0.016	1.001	6.850	838
1631	260.451	259.637		0.16	0.16	1.31	1.04	0.36	83	84	71	2.87	2	75	0.043	100	100	120.5	0.13	0.83	10.96	122.0	178.5	173.5	56.0	178.1	132	71	71	71	0.016	1.001	6.954	850
1632	260.611	259.796		0.16	0.16	1.31	1.04	0.36	83	84	71	2.87	2	75	0.046	97	96	120.2	0.33	0.85	10.74	121.9	178.3	173.4	56.1	177.9	132	71	71	71	0.016	1.001	7.107	867
1633	260.772	259.955		0.16	0.16	1.32	1.03	0.36	83	84	71	2.87	2	75	0.043	101	100	120.5	-0.38	0.77	14.18	121.8	178.2	173.3	56.1	177.9	130	71	71	71	0.016	1.001	6.387	779
1634	260.933	260.114		0.16	0.16	1.31	1.04	0.36	83	84	71	2.87	2	75	0.045	99	97	120.5	0.04	0.78	9.08	121.7	178.1	173.1	56.0	177.7	130	71	71	71	0.016	1.001	6.520	794
1635	261.093	260.274		0.16	0.16	1.31	1.04	0.36	83	83	71	2.86	2	75	0.044	99	99	120.7	-0.21	0.85	10.35	121.6	177.9	173.0	56.0	177.6	130	71	71	71	0.016	1.001	7.082	862
1636	261.253	260.433		0.16	0.16	1.32	1.04	0.36	83	83	71	2.88	2	74	0.044	99	99	120.0	0.68	0.80	11.90	121.5	177.9	172.9	56.0	177.5	129	71	71	71	0.015	1.001	6.660	810
1637	261.413	260.592		0.16	0.16	1.31	1.04	0.36	83	83	71	2.86	2	75	0.045	98	98	120.6	-0.56	0.86	9.57	121.3	177.7	172.8	56.0	177.3	127	71	71	71	0.016	1.001	7.145	868
1638	261.573	260.751		0.16	0.16	1.31	1.04	0.36	83	83	71	2.86	2	75	0.044	99	99	120.9	-0.35	0.86	11.99	121.2	177.6	172.7	56.0	177.2	128	71	71	71	0.015	1.001	7.137	866
1639	261.733	260.910		0.16	0.16	1.31	1.04	0.36	83	83	71	2.87	2	75	0.044	99	99	120.9	0.05	0.86	13.98	121.1	177.4	172.6	56.0	177.1	127	71	71	71	0.015	1.001	7.149	867
1640	261.893	261.069		0.16	0.16	1.31	1.04	0.36	83	83	71	2.87	2	75	0.047	96	96	120.1	0.78	0.84	10.37	120.9	177.3	172.4	56.0	177.0	126	71	71	71	0.014	1.001	6.987	846
1641	262.054	261.229		0.16	0.16	1.31	1.04	0.36	83	83	71	2.88	2	75	0.044	100	99	120.4	-0.29	0.82	14.10	120.7	177.2	172.4	56.1	176.9	125	71	71	71	0.014	1.001	6.823	825
1642	262.214	261.387		0.16	0.16	1.31	1.04	0.36	83	84	71	2.87	2	75	0.046	97	96	120.4	0.04	0.88	14.22	120.7	177.1	172.2	56.0	176.7	126	71	71	71	0.015	1.001	7.311	883
1643	262.374	261.547		0.16	0.16	1.31	1.04	0.36	83	84	71	2.87	2	75	0.046	97	97	119.6	0.72	0.88	12.81	120.6	176.9	172.1	56.0	176.6	126	71	71	71	0.014	1.001	7.307	883
1644	262.534	261.706		0.16	0.16	1.31	1.04	0.36	83	83	71	2.87	2	75	0.044	99	99	120.1	-0.42	0.84	14.11	120.5	176.9	172.1	56.0	176.5	124	71	71	71	0.014	1.001	6.980	842
1645	262.694	261.864		0.16	0.16	1.31	1.04	0.36	83	83	71	2.88	2	75	0.044	99	98	120.6	-0.53	0.80	12.88	120.4	176.7	171.9	56.0	176.4	124	71	71	71	0.014	1.001	6.658	802
1646	262.854	262.025		0.16	0.16	1.31	1.04	0.36	83	83	71	2.87	2	75	0.043	100	101	120.9	-0.25	0.84	12.72	120.2	176.6	171.8	56.0	176.2	123	71	71	71	0.014	1.001	6.984	841
1647	263.014	262.183		0.16	0.16	1.31	1.04	0.36	83	83	71	2.87	2	75	0.043	100	99	120.0	0.84	0.80	11.96	120.1	176.5	171.6	56.0	176.1	121	71	71	71	0.014	1.001	6.660	801
1648	263.175	262.342		0.16	0.16	1.31	1.04	0.36	83	83	71	2.86	2	75	0.042	102	101	120.4	-0.41	0.86	15.50	119.9	176.3	171.5	56.0	176.0	121	71	71	71	0.013	1.001	7.148	858
1649	263.335	262.502		0.16	0.16	1.31	1.03	0.36	83	83	71	2.87	2	80	0.043	101	101	120.7	-0.32	0.82	12.91	119.9	176.2	171.4	56.0	175.9	122	71	71	71	0.013	1.001	6.819	819
1650	263.495	262.659		0.16	0.16	1.31	1.03	0.36	83	83	71	2.89	2	78	0.041	103	101	120.5	0.22	0.84	11.60	119.6	176.1	171.3	56.1	175.8	149	71	71	71	0.035	1.001	6.978	836
1651	263.656	262.818		0.16	0.16	1.31	1.04	0.36	83	83	71	2.87	2	75	0.044	100	99	120.3	0.20	0.80	14.28	119.6	176.1	171.3	56.0	175.6	146	72	71	71	0.019	1.001	6.658	797
1652	263.816	262.978		0.16	0.16	1.30	1.04	0.36	83	83	71	2.87	2	75	0.043	100	101	120.8	-0.52	0.84	9.05	119.6	176.0	171.2	56.0	175.6	140	71	71	71	0.018	1.001	6.988	837
1653	263.976	263.137		0.16	0.16	1.31	1.04	0.36	83	83	71	2.87	2	75	0.043	100	100	120.3	0.54	0.88	14.27	119.5	175.8	170.9	56.0	175.5	136	71	71	71	0.017	1.001	7.307	874
1654	264.136	263.296		0.16	0.16	1.31	1.03	0.36	83	83	71	2.86	2	75	0.044	99	99	120.3	-0.02	0.88	14.29	119.3	175.7	171.0	56.0	175.4	132	71	71	71	0.016	1.001	7.308	873
1655	264.296	263.455		0.16	0.16	1.31	1.04	0.36	83	83	71	2.86	2	74	0.042	101	101	120.2	0.15	0.80	11.66	119.3	175.6	170.8	56.1	175.3	130	71	71	71	0.015	1.001	6.659	795
1656	264.456	263.614		0.16	0.16	1.31	1.04	0.36	83	83	71	2.86	2	75	0.045	98	98	120.2	-0.07	0.80	12.18	119.1	175.5	170.6	56.1	175.1	128	71	71	71	0.015	1.001	6.659	794
1657	264.616	263.774		0.16	0.16	1.31	1.04	0.36	83	83	71	2.87	2	75	0.041	103	103	119.6	0.64	0.84	11.89	118.9	175.3	170.5	56.1	175.0	126	71	71	71	0.014	1.001	6.983	831
1658	264.777	263.933		0.16	0.16	1.31	1.04	0.36	83	83	71	2.88	2	75	0.044	100	99	120.2	-0.58	0.82	13.11	118.8	175.2	170.4	56.1	174.9	125	71	71	71	0.014	1.001	6.817	811
1659	264.937	264.092		0.16	0.16	1.31	1.03	0.36	83	83	71	2.86	2	75	0.041	103	102	120.8	-0.66	0.88	11.66	118.6	175.0	170.2	56.1	174.7	125	71	71	71	0.013	1.001	7.300	867
1660	265.097	264.252		0.16	0.16	1.31	1.03	0.36	83	83	71	2.86	2	74	0.044	99	99	120.5	0.32	0.78	12.99	118.5	175.0	170.2	56.1	174.6	124	71	71	71	0.014	1.001	6.486	770
1661	265.257	264.410		0.16	0.16	1.31	1.04	0.36	83	83	71	2.88	2	75	0.041	103	102	120.1	0.40	0.80	15.45	118.4	174.8	170.0	56.0	174.5	122	71	71	71	0.013	1.001	6.643	788
1662	265.417	264.569		0.16	0.16	1.31	1.04	0.36	83	83	71	2.87	2	74	0.043	100	100	120.1	0.03	0.88	13.85	118.3	174.7	169.9	56.0	174.3	121	71	71	71	0.013	1.001	7.345	870
1663	265.578	264.729		0.16	0.16	1.31	1.03	0.36	83	83	71	2.86	2	74	0.042	102	102	120.3	-0.27	0.78	13.18	118.3	174.6	169.8	56.0	174.2	120	71	71	71	0.013	1.001	6.534	774
1664	265.738	264.888		0.16	0.16	1.31	1.04	0.36	83	83	71	2.87	2	75	0.037	108	108	120.3	0.07	0.84	10.74	118.1	174.4	169.5	56.0	174.0	120	71	71	71	0.012	1.001	6.986	826

Elapsed Time	Particulate Sampling Data																Fuel Weight, lb		Flow, gpm		Temperature Data, oF											
	Gas Meter Cubic Feet (1)	Gas Meter Cubic Feet (2)	Gas Meter Cubic Feet (amb)	Sample Rate, cfm (1)	Sample Rate, cfm (2)	Orifice dH (1)	Orifice dH (2)	Orifice dH (amb)	Meter oF (1)	Meter oF (2)	Meter oF (amb)	Meter Vac. In. Hg. (1)	Meter Vac. In. Hg. (2)	Dilution Tunnel Temp.	Dilution Tunnel dP	Pro. Rate (%) (1)	Pro. Rate (%) (2)	Scale Reading	Weight Change	Load Side Liquid Flow Rate	Boiler Side Liquid Flow Rate (optional)	Thermopile ΔT	Boiler to Heat Exch. Temp.	Heat Exch to Boiler Temp.	Inlet Load Temp.	Outlet Load Temp.	Stack	Filter (1)	Filter (2)	Ambient		Specific Heat of Inlet Water (BTU/lb-°F)	Mass Flow Rate of Inlet Water (lb/min)	Heat Output, Btu
1665	265.898	265.047		0.16	0.16	1.31	1.04	0.36	83	83	71	2.87	2	75	0.042	101	101	120.3	-0.04	0.80	10.33	118.0	174.3	169.5	56.0	174.0	120	71	71	71	0.012	1.001	6.659	787
1666	266.058	265.206		0.16	0.16	1.31	1.03	0.36	83	83	71	2.86	2	75	0.043	100	100	120.3	0.03	0.85	15.48	117.9	174.2	169.4	56.0	173.9	118	71	71	71	0.012	1.001	7.058	833
1667	266.219	265.365		0.16	0.16	1.31	1.04	0.36	83	83	71	2.87	2	75	0.044	100	99	119.8	0.47	0.88	11.64	117.7	174.1	169.3	56.0	173.7	117	71	71	71	0.012	1.001	7.304	861
1668	266.380	265.525		0.16	0.16	1.31	1.04	0.36	83	83	71	2.87	2	75	0.045	99	98	120.2	-0.42	0.86	15.49	117.6	173.9	169.1	56.0	173.6	117	71	71	71	0.012	1.001	7.145	841
1669	266.540	265.683		0.16	0.16	1.31	1.04	0.36	83	83	71	2.87	2	75	0.043	100	99	120.0	0.27	0.82	15.48	117.4	173.8	169.1	56.0	173.4	116	71	71	71	0.011	1.001	6.819	802
1670	266.700	265.843		0.16	0.16	1.31	1.04	0.36	83	83	71	2.86	2	74	0.042	101	102	120.3	-0.36	0.84	15.41	117.3	173.7	169.0	56.1	173.3	115	71	71	71	0.011	1.001	6.984	820
1671	266.860	266.002		0.16	0.16	1.31	1.04	0.36	83	83	71	2.87	2	75	0.043	100	100	120.3	0.00	0.78	14.20	117.1	173.5	168.8	56.1	173.2	116	71	71	71	0.012	1.001	6.502	762
1672	267.020	266.161		0.16	0.16	1.31	1.04	0.36	83	83	71	2.88	2	74	0.044	99	99	120.0	0.34	0.86	15.52	117.0	173.4	168.5	56.0	173.0	115	71	71	71	0.011	1.001	7.146	837
1673	267.180	266.320		0.16	0.16	1.30	1.04	0.36	83	83	71	2.86	2	75	0.039	105	105	120.0	0.01	0.80	14.25	117.0	173.3	168.5	56.0	173.0	116	71	71	71	0.011	1.001	6.660	780
1674	267.340	266.479		0.16	0.16	1.31	1.04	0.36	83	83	71	2.87	2	74	0.040	104	103	120.4	-0.38	0.82	14.25	116.7	173.1	168.4	56.0	172.7	114	71	71	71	0.011	1.001	6.821	797
1675	267.500	266.638		0.16	0.16	1.31	1.04	0.36	83	83	71	2.88	2	74	0.041	103	102	119.8	0.55	0.82	14.21	116.6	172.9	168.2	56.0	172.5	115	71	71	71	0.011	1.001	6.818	796
1676	267.661	266.798		0.16	0.16	1.31	1.04	0.36	83	83	71	2.86	2	74	0.044	100	99	120.1	-0.32	0.86	15.51	116.5	172.9	168.2	56.0	172.5	114	71	71	71	0.011	1.001	7.146	834
1677	267.820	266.957		0.16	0.16	1.31	1.03	0.36	83	83	71	2.88	2	75	0.048	94	95	119.8	0.30	0.80	13.11	116.4	172.8	168.2	56.0	172.4	113	71	71	71	0.011	1.001	6.660	776
1678	267.980	267.115		0.16	0.16	1.31	1.04	0.36	83	83	71	2.86	2	74	0.044	99	98	120.5	-0.64	0.82	14.20	116.3	172.6	168.0	56.0	172.3	115	71	71	71	0.011	1.001	6.823	794
1679	268.141	267.275		0.16	0.16	1.31	1.04	0.36	83	83	71	2.87	2	74	0.043	101	100	120.3	0.15	0.86	15.54	116.2	172.5	167.8	56.0	172.2	112	71	71	71	0.011	1.001	7.145	831
1680	268.301	267.434		0.16	0.16	1.31	1.03	0.36	83	83	71	2.89	2	79	0.042	102	101	119.6	0.71	0.86	15.44	116.0	172.3	167.6	56.0	172.0	114	71	71	71	0.011	1.001	7.148	830
1681	268.460	267.592		0.16	0.16	1.31	1.04	0.36	83	83	71	2.87	2	76	0.043	100	99	120.3	-0.64	0.84	15.47	115.9	172.2	167.5	56.0	171.9	144	71	71	71	0.031	1.001	6.986	810
1682	268.621	267.752		0.16	0.16	1.31	1.04	0.36	83	83	71	2.86	2	75	0.043	101	101	120.2	0.06	0.82	15.42	115.8	172.2	167.5	56.0	171.8	137	71	71	71	0.018	1.001	6.825	792
1683	268.781	267.910		0.16	0.16	1.31	1.03	0.36	83	83	71	2.87	2	74	0.043	100	99	119.8	0.39	0.76	14.25	115.7	172.0	167.4	56.0	171.7	133	71	71	71	0.016	1.001	6.336	734
1684	268.942	268.070		0.16	0.16	1.31	1.04	0.36	83	83	71	2.86	2	74	0.043	101	100	119.9	-0.15	0.78	14.16	115.5	171.9	167.3	56.1	171.6	130	71	71	71	0.015	1.001	6.499	752
1685	269.102	268.229		0.16	0.16	1.31	1.03	0.36	83	83	71	2.88	2	74	0.044	99	99	120.2	-0.29	0.86	15.45	115.6	171.8	167.2	55.9	171.5	126	71	71	71	0.014	1.001	7.143	827
1686	269.262	268.387		0.16	0.16	1.31	1.03	0.36	83	83	71	2.88	2	74	0.043	100	99	119.9	0.37	0.78	15.47	115.3	171.6	167.0	55.9	171.3	125	71	71	71	0.014	1.001	6.514	752
1687	269.422	268.547		0.16	0.16	1.31	1.03	0.36	83	83	71	2.87	2	74	0.045	98	98	120.5	-0.64	0.86	15.49	115.3	171.6	167.0	56.0	171.2	123	71	71	71	0.013	1.001	7.147	825
1688	269.583	268.706		0.16	0.16	1.31	1.03	0.36	83	83	71	2.86	2	74	0.044	100	99	120.2	0.26	0.84	15.48	115.1	171.4	166.9	55.9	171.0	122	71	71	71	0.012	1.001	7.010	808
1689	269.743	268.865		0.16	0.16	1.30	1.04	0.36	83	83	71	2.87	2	74	0.046	97	96	119.9	0.32	0.90	14.70	115.0	171.3	166.7	55.9	170.9	121	71	71	71	0.012	1.001	7.476	861
1690	269.903	269.025		0.16	0.16	1.30	1.04	0.36	83	83	71	2.86	2	74	0.043	100	100	119.8	0.14	0.80	14.40	114.9	171.2	166.5	56.0	170.9	120	71	71	71	0.012	1.001	6.684	769
1691	270.063	269.183		0.16	0.16	1.31	1.04	0.36	83	83	71	2.87	2	74	0.043	100	99	120.2	-0.38	0.82	15.52	114.7	171.1	166.5	56.0	170.7	118	71	71	71	0.011	1.001	6.865	788
1692	270.223	269.342		0.16	0.16	1.31	1.04	0.36	83	83	71	2.88	2	74	0.042	101	101	120.5	-0.30	0.84	14.23	114.6	170.9	166.3	56.0	170.6	117	71	71	71	0.011	1.001	6.991	802
1693	270.383	269.502		0.16	0.16	1.31	1.04	0.36	83	83	71	2.86	2	74	0.044	99	99	120.0	0.51	0.86	14.14	114.5	170.8	166.2	56.0	170.4	116	71	71	71	0.012	1.001	7.141	818
1694	270.543	269.660		0.16	0.16	1.31	1.03	0.36	83	83	71	2.88	2	74	0.045	98	97	119.4	0.50	0.80	15.52	114.3	170.6	166.0	56.0	170.3	116	71	71	71	0.012	1.001	6.659	762
1695	270.703	269.820		0.16	0.16	1.31	1.04	0.36	83	83	71	2.86	2	74	0.044	99	99	120.1	-0.67	0.80	15.48	114.1	170.5	165.8	56.0	170.1	115	71	71	71	0.011	1.001	6.703	766
1696	270.863	269.979		0.16	0.16	1.31	1.03	0.36	83	83	71	2.87	2	74	0.045	98	98	120.3	-0.13	0.84	15.48	114.1	170.4	165.8	56.0	170.1	114	71	71	71	0.011	1.001	6.981	797
1697	271.023	270.137		0.16	0.16	1.31	1.04	0.36	83	83	71	2.86	2	74	0.042	101	100	120.4	-0.15	0.86	15.50	114.0	170.2	165.6	56.0	169.9	114	71	71	71	0.011	1.001	7.130	814
1698	271.183	270.297		0.16	0.16	1.31	1.04	0.36	83	83	71	2.87	2	74	0.042	101	102	119.8	0.62	0.78	15.49	113.8	170.1	165.6	56.0	169.8	113	71	71	71	0.011	1.001	6.503	741
1699	271.344	270.456		0.16	0.16	1.32	1.04	0.36	83	83	71	2.86	2	74	0.040	104	103	120.0	-0.27	0.82	15.49	113.8	170.0	165.5	55.9	169.7	112	71	71	71	0.011	1.001	6.821	777
1700	271.504	270.615		0.16	0.16	1.31	1.04	0.36	83	83	71	2.87	2	74	0.044	99	99	120.4	-0.40	0.82	15.47	113.5	169.8	165.2	56.0	169.5	111	71	71	71	0.010	1.001	6.823	776
1701	271.665	270.775		0.16	0.16	1.31	1.04	0.36	83	83	70	2.86	2	74	0.044	100	99	120.3	0.10	0.80	15.49	113.5	169.8	165.1	56.0	169.4	112	71	71	70	0.010	1.001	6.657	756
1702	271.825	270.933		0.16	0.16	1.30	1.04	0.36	83	83	70	2.87	2	74	0.042	101	100	121.2	-0.82	0.82	15.45	113.4	169.6	165.0	55.9	169.3	111	71	71	70	0.010	1.001	6.820	774
1703	271.985	271.092		0.16	0.16	1.31	1.04	0.36	83	83	70	2.87	2	74	0.045	98	98	120.4	0.76	0.80	15.44	113.2	169.5	164.9	55.9	169.2	111	71	71	70	0.010	1.001	6.661	755
1704	272.146	271.252		0.16	0.16	1.30	1.04	0.36	83	83	70	2.87	2	74	0.044	100	99	120.5	-0.11	0.84	15.49	113.0	169.3	164.8	56.0	169.0	110	71	71	70	0.010	1.001	6.985	790
1705	272.306	271.410		0.16	0.16	1.31	1.04	0.36	83	83	71	2.87	2	74	0.044	99	98	120.5	-0.03	0.78	15.45	112.9	169.2	164.6	56.0	168.9	110	71	71	71	0.010	1.001	6.496	734
1706	272.466	271.570		0.16	0.16	1.30	1.04	0.36	83	83	70	2.87	2	74	0.043	100	100	120.1	0.48	0.84	15.51	112.8	169.1	164.5	55.9	168.7	110	71	70	70	0.010	1.001	6.985	789
1707	272.626	271.729		0.16	0.16	1.31	1.03	0.36	83	83	70	2.86	2	74	0.042	101	101	120.5	-0.39	0.82	15.53	112.7	168.9	164.4	55.9	168.6	109	71	71	70	0.010	1.001	6.821	770
1708	272.786	271.888		0.16	0.16	1.31	1.04	0.36	83	83	71	2.87	2	74	0.044	99	99	119.8	0.64	0.78	15.46	112.5	168.7	164.2	55.9	168.5	108	71	71	71	0.010	1.001	6.498	732
1709	272.946	272.048		0.16	0.16	1.31	1.03	0.36	83	83	71	2.87	2	74	0.044	99	99	119.8	0.07	0.82	15.54	112.4	168.6	164.1	55.9	168.3	109	71	70	71	0.010	1.001	6.816	767
1710	273.106	272.206		0.16	0.16	1.31	1.04	0.36	83	83	71	2.86	2	74	0.042	101	100	119.8	-0.01	0.80	15.55	112.3	168.6	164.1	55.9	168.2	108	71	71	71	0.009	1.001	6.658	749
1711	273.266	272.365		0.16	0.16	1.31	1.03	0.36	83	83	71	2.88	2	80	0.043	101	100	120.4	-0.62	0.82	15.43	112.2	168.4	163.9	55.9	168.1	107	71	71	71	0.010	1.001	6.821	766
1712	273.426	272.524		0.16	0.16	1.31	1.04	0.36	83	83	71	2.87	2	76	0.046	97	97	119.3	1.06	0.82	15.50	112.0	168.2	163.7	55.9	167.9	135	71	71	71	0.029	1.001	6.821	765
1713	273.587	272.683		0.16	0.16	1.31	1.04	0.36	83	83	70	2.86	2	74	0.041	103	102	119.6	-0.30	0.82	15.47	111.9	168.2	163.6	55.9	167.8	132	71	70	70	0.015	1.001	6.822	764
1714	273.747	272.842		0.16	0.16	1.31	1.04	0.36	83	83	71	2.88	2	74	0.046	97	96	120.2	-0.52	0.78	15.54	111.8	168.0	163.4	55.9	167.7	128	71	71	71	0.014	1.001	6.499	728
1715	273.907	273.001		0.16	0.16	1.31	1.03	0.36	83	83	71	2.86	2	74	0.040	104	103	120.1	0.07	0.84	15.58	111.7	167.9	163.4	55.9	167.6	125	71	71	71	0.013	1.001	6.984	781
1716	274.067	273.160		0.16	0.16	1.31	1.04	0.36	83	83	71	2.86	2	74	0.042	101	101	120.3	-0.23	0.80	15.57	111.6	167.8	163.2	55.9	167.5	121	71	71	71	0.012	1.001	6.664	744
1717	274.228	273.320		0.16	0.16	1.31	1.03	0.36	83	83	71	2.86	2	74	0.046	97	97	119.6	0.75	0.82	15.54	111.4	167.7	163.1	55.9	167.4	120	71	71	71	0.012	1.001	6.823	761
1718	274.388	273.478		0.16	0.16	1.30	1.04	0.36	83	83	71	2.88	2	74	0.041	103	102	119.8	-0.25	0.82	15.50	111.3	167.5	163.0	56.0	167.2	118	71	71	71	0.012	1.001	6.799	757
1719	274.549	273.637		0.16	0.16	1.31	1.04	0.36	83	83	71	2.87	2	74	0.046	97	96	120.2	-0.36	0.72	15.47	111.2	167.4	163.0	56.0	167.1	118	71	71	71	0.012	1.001	6.008	669
1720	274.709	273.797		0.16	0.16	1.31	1.03	0.36	83	83	70	2.86	2	74	0.044	99	99	119.8	0.35	0.85	15.52	111.1	167.3	162.8	55.9	167.0	116	71	71	70	0.011	1.001	7.124	792
1721	274.869	273.955		0.16	0.16	1.32	1.04	0.36	83	83	70	2.87	2	74	0.043	100	99	120.3	-0.42	0.82	15.45	111.0	167.1	162.6	55.9	166.8	116	71	71	70	0.011	1.001	6.829	759
1722	275.029	274.114		0.16	0.16	1.30	1.04	0.36	83	83	70	2.86	2	74	0.042	101	101	120.3	-0.03	0.80	15.55	110.8	167.1	162.5	55.9	166.7	114	71	71	70	0.011	1.001	6.658	739
1723	275.190	274.274		0.16	0.16	1.30	1.04	0.36	83	83	70	2.87	2	74	0.045	99	98	119.4	0.89	0.81	15.51	110.7	166.9	162.4	55.9	166.6	114	71	71	70	0.010	1.001	6.785	752
1724	275.349	274.433		0.16	0.16	1.31	1.04	0.36	83	83	70	2.87	2	74	0.044	98	99	120.7	-1.27	0.82	15.40	110.6	166.8	162.3	55.9	166.5	113	71	71	70	0.010	1.001	6.830	756
1725	275.509	274.592		0.16	0.16	1.31	1.04	0.36	83	83	70	2.87	2	74	0.043	100	100	120.5	0.12	0.79	15.53	110.3	166.7	162.2	56.0	166.3	112	71	71	70	0.010	1.001	6.571	726
1726	275.670	274.751		0.16	0.16	1.31	1.03	0.36	83	83	70	2.86	2	74	0.042	102	101	120.0	0.57	0.80	15.51	110.3	166.6	162.1	55.9	166.2	111	71	71	70	0.010	1.001	6.656	735

Elapsed Time	Particulate Sampling Data																Fuel Weight, lb		Flow, gpm		Temperature Data, oF												
	Gas Meter Cubic Feet (1)	Gas Meter Cubic Feet (2)	Gas Meter Cubic Feet (amb)	Sample Rate, cfm (1)	Sample Rate, cfm (2)	Orifice dH (1)	Orifice dH (2)	Orifice dH (amb)	Meter oF (1)	Meter oF (2)	Meter oF (amb)	Meter Vac. In. Hg. (1)	Meter Vac. In. Hg. (2)	Dilution Tunnel Temp.	Dilution Tunnel dP	Pro. Rate (%) (1)	Pro. Rate (%) (2)	Scale Reading	Weight Change	Load Side Liquid Flow Rate	Boiler Side Liquid Flow Rate (optional)	Thermopile ΔT	Boiler to Heat Exch. Temp.	Heat Exch to Boiler Temp.	Inlet Load Temp.	Outlet Load Temp.	Stack	Filter (1)	Filter (2)	Ambient		Specific Heat of Inlet Water (BTU/lb-°F)	Mass Flow Rate of Inlet Water (lb/min)	Heat Output, Btu
1727	275.830	274.910		0.16	0.16	1.31	1.04	0.36	83	83	70	2.87	2	74	0.043	100	100	120.4	-0.42	0.84	15.54	110.2	166.3	161.9	55.9	166.1	110	71	71	70	0.010	1.001	6.982	770
1728	275.990	275.070		0.16	0.16	1.31	1.03	0.36	83	83	71	2.86	2	74	0.046	97	97	120.1	0.30	0.81	15.52	110.1	166.2	161.8	55.9	166.0	111	71	71	71	0.010	1.001	6.776	747
1729	276.150	275.228		0.16	0.16	1.31	1.03	0.36	83	83	70	2.87	2	74	0.040	104	103	119.7	0.44	0.80	15.49	109.9	166.1	161.7	55.9	165.8	110	71	71	70	0.009	1.001	6.659	733
1730	276.310	275.387		0.16	0.16	1.31	1.04	0.36	83	83	70	2.86	2	74	0.042	101	101	120.6	-0.93	0.84	15.52	109.8	166.0	161.6	55.9	165.7	110	71	71	70	0.010	1.001	6.983	768
1731	276.471	275.547		0.16	0.16	1.31	1.04	0.36	83	83	71	2.86	2	74	0.043	101	100	120.0	0.60	0.84	15.54	109.7	165.9	161.4	55.9	165.6	110	71	71	71	0.009	1.001	6.980	767
1732	276.631	275.705		0.16	0.16	1.31	1.04	0.36	83	83	70	2.87	2	74	0.042	101	100	119.9	0.07	0.78	15.45	109.5	165.7	161.4	55.9	165.4	108	71	71	70	0.009	1.001	6.497	713
1733	276.791	275.864		0.16	0.16	1.31	1.04	0.36	83	83	71	2.87	2	74	0.043	100	100	119.9	-0.03	0.88	15.47	109.4	165.6	161.2	55.9	165.3	108	71	71	71	0.009	1.001	7.306	800
1734	276.952	276.024		0.16	0.16	1.31	1.03	0.36	83	83	70	2.87	2	74	0.044	100	99	119.5	0.41	0.84	15.47	109.3	165.5	161.0	55.9	165.2	108	71	70	70	0.009	1.001	6.983	764
1735	277.112	276.183		0.16	0.16	1.31	1.04	0.36	83	83	70	2.87	2	74	0.047	96	95	120.3	-0.78	0.78	15.43	109.1	165.3	160.9	55.9	165.0	107	71	70	70	0.009	1.001	6.500	710
1736	277.273	276.342		0.16	0.16	1.31	1.04	0.36	83	83	70	2.87	2	74	0.043	101	100	119.8	0.56	0.88	15.55	109.1	165.2	160.8	55.9	164.9	106	71	70	70	0.009	1.001	7.305	798
1737	277.433	276.501		0.16	0.16	1.31	1.03	0.36	83	83	70	2.87	2	74	0.044	99	99	120.3	-0.51	0.78	15.50	108.9	165.1	160.6	55.9	164.8	106	71	70	70	0.009	1.001	6.495	708
1738	277.593	276.660		0.16	0.16	1.31	1.04	0.36	83	83	70	2.86	2	74	0.043	100	100	119.7	0.55	0.84	15.55	108.8	164.9	160.5	55.9	164.6	105	71	70	70	0.009	1.001	6.983	760
1739	277.754	276.820		0.16	0.16	1.31	1.04	0.36	83	83	70	2.86	2	74	0.045	99	98	119.6	0.11	0.84	15.46	108.6	164.8	160.4	55.9	164.5	106	71	70	70	0.009	1.001	6.985	759
1740	277.914	276.978		0.16	0.16	1.31	1.03	0.36	83	83	70	2.86	2	74	0.041	103	102	119.5	0.08	0.84	15.45	108.5	164.7	160.3	55.9	164.4	105	71	70	70	0.009	1.001	6.989	759
1741	278.074	277.138		0.16	0.16	1.31	1.04	0.36	83	83	70	2.86	2	74	0.040	104	104	119.7	-0.22	0.80	15.51	108.4	164.5	160.1	55.9	164.2	106	71	70	70	0.009	1.001	6.657	722
1742	278.234	277.297		0.16	0.16	1.31	1.03	0.36	83	83	70	2.87	2	79	0.045	98	98	119.9	-0.16	0.88	15.46	108.2	164.5	160.1	55.9	164.1	105	71	70	70	0.009	1.001	7.311	792
1743	278.394	277.455		0.16	0.16	1.31	1.04	0.36	83	83	70	2.87	2	75	0.046	97	96	119.2	0.64	0.78	15.46	108.2	164.3	159.9	55.9	164.0	129	71	71	70	0.024	1.001	6.496	703
1744	278.554	277.614		0.16	0.16	1.31	1.04	0.36	83	83	70	2.86	2	74	0.043	100	100	120.3	-1.03	0.80	15.54	108.0	164.2	159.8	55.8	163.8	127	71	70	70	0.012	1.001	6.658	720
1745	278.714	277.774		0.16	0.16	1.31	1.03	0.36	83	83	70	2.86	2	74	0.046	97	97	119.7	0.54	0.90	15.48	107.9	164.1	159.7	55.9	163.8	123	71	70	70	0.011	1.001	7.469	807
1746	278.874	277.932		0.16	0.16	1.31	1.04	0.36	83	83	70	2.87	2	74	0.044	99	98	119.7	0.05	0.76	15.54	107.8	164.0	159.6	55.8	163.6	119	71	70	70	0.011	1.001	6.338	684
1747	279.034	278.092		0.16	0.16	1.31	1.04	0.36	83	83	70	2.87	2	74	0.044	99	99	119.7	-0.01	0.80	15.56	107.7	163.9	159.4	55.8	163.6	117	71	71	70	0.011	1.001	6.654	718
1748	279.195	278.251		0.16	0.16	1.31	1.03	0.36	83	83	70	2.87	2	74	0.046	97	96	120.0	-0.31	0.84	15.54	107.6	163.7	159.3	55.9	163.4	115	71	71	70	0.011	1.001	6.980	752
1749	279.355	278.410		0.16	0.16	1.31	1.04	0.36	83	83	70	2.86	2	74	0.041	103	102	120.0	0.06	0.88	15.55	107.4	163.6	159.3	55.9	163.3	114	71	71	70	0.011	1.001	7.306	786
1750	279.515	278.570		0.16	0.16	1.31	1.04	0.36	83	83	70	2.86	2	74	0.046	97	97	119.6	0.36	0.84	15.57	107.3	163.5	159.2	55.9	163.2	113	71	71	70	0.010	1.001	6.981	750
1751	279.675	278.728		0.16	0.16	1.31	1.04	0.36	83	83	70	2.87	2	74	0.042	101	100	119.9	-0.31	0.80	15.50	107.1	163.2	158.9	55.9	163.0	111	71	70	70	0.010	1.001	6.650	713
1752	279.836	278.887		0.16	0.16	1.31	1.04	0.36	83	83	70	2.87	2	74	0.044	100	99	120.2	-0.33	0.74	15.51	107.0	163.2	158.8	55.9	162.9	111	71	70	70	0.010	1.001	6.169	661
1753	279.997	279.047		0.16	0.16	1.31	1.04	0.36	83	83	70	2.86	2	74	0.041	103	103	119.9	0.37	0.86	15.51	106.9	163.1	158.8	55.9	162.8	110	71	70	70	0.009	1.001	7.177	768
1754	280.157	279.205		0.16	0.16	1.31	1.03	0.36	83	83	70	2.86	2	74	0.045	98	97	120.6	-0.76	0.84	15.43	106.8	162.9	158.6	55.9	162.7	109	71	70	70	0.009	1.001	6.976	746
1755	280.317	279.364		0.16	0.16	1.31	1.04	0.36	83	83	70	2.86	2	74	0.044	99	99	119.8	0.79	0.85	15.54	106.7	162.8	158.5	55.8	162.5	108	71	70	70	0.010	1.001	7.062	754
1756	280.477	279.524		0.16	0.16	1.31	1.03	0.36	83	83	70	2.86	2	74	0.043	100	100	119.9	-0.03	0.86	15.55	106.5	162.7	158.4	55.8	162.4	109	71	70	70	0.009	1.001	7.172	765
1757	280.637	279.682		0.16	0.16	1.31	1.04	0.36	83	83	70	2.86	2	74	0.043	100	99	120.3	-0.47	0.78	15.52	106.4	162.5	158.2	55.9	162.2	107	71	70	70	0.009	1.001	6.509	693
1758	280.798	279.842		0.16	0.16	1.31	1.04	0.36	83	83	70	2.87	2	74	0.046	97	97	120.1	0.26	0.85	15.48	106.2	162.5	158.1	55.9	162.1	107	71	70	70	0.009	1.001	7.057	751
1759	280.957	280.001		0.16	0.16	1.30	1.04	0.36	83	83	70	2.87	2	74	0.042	101	101	120.0	0.09	0.78	15.50	106.1	162.2	158.0	55.9	162.0	107	71	70	70	0.009	1.001	6.496	690
1760	281.117	280.160		0.16	0.16	1.31	1.04	0.36	83	83	70	2.86	2	74	0.045	98	98	119.6	0.35	0.82	15.52	106.0	162.1	157.8	55.9	161.8	107	71	70	70	0.009	1.001	6.822	724
1761	281.278	280.320		0.16	0.16	1.31	1.04	0.36	83	83	70	2.86	2	74	0.044	100	99	119.9	-0.27	0.82	15.47	105.9	162.0	157.7	55.8	161.7	107	71	70	70	0.009	1.001	6.821	723
1762	281.438	280.478		0.16	0.16	1.31	1.04	0.36	83	83	70	2.86	2	74	0.042	101	100	120.2	-0.28	0.86	15.53	105.7	161.9	157.7	55.9	161.6	105	71	70	70	0.009	1.001	7.139	756
1763	281.598	280.637		0.16	0.16	1.31	1.04	0.36	83	83	70	2.87	2	74	0.045	98	98	120.5	-0.34	0.88	15.55	105.6	161.8	157.5	55.9	161.5	106	71	70	70	0.009	1.001	7.309	773
1764	281.758	280.797		0.16	0.16	1.31	1.04	0.36	83	83	70	2.86	2	74	0.042	101	102	119.8	0.72	0.80	15.58	105.5	161.6	157.4	55.9	161.3	105	71	70	70	0.009	1.001	6.662	703
1765	281.918	280.956		0.16	0.16	1.31	1.04	0.36	83	83	70	2.86	2	74	0.042	101	101	120.4	-0.64	0.84	15.59	105.4	161.5	157.3	55.9	161.2	104	71	70	70	0.008	1.001	6.985	737
1766	282.078	281.115		0.16	0.16	1.31	1.04	0.36	83	83	70	2.86	2	74	0.043	100	100	119.5	0.97	0.86	15.50	105.3	161.4	157.1	55.8	161.1	105	71	70	70	0.009	1.001	7.144	753
1767	282.239	281.274		0.16	0.16	1.31	1.04	0.36	83	83	70	2.86	2	74	0.045	99	98	119.8	-0.34	0.82	15.53	105.1	161.2	157.0	55.8	160.9	104	71	70	70	0.009	1.001	6.822	718
1768	282.399	281.433		0.16	0.16	1.32	1.04	0.36	83	83	70	2.87	2	74	0.047	96	95	119.3	0.49	0.86	15.55	105.0	161.1	157.0	55.9	160.9	103	71	70	70	0.009	1.001	7.146	751
1769	282.560	281.593		0.16	0.16	1.31	1.03	0.36	83	83	70	2.86	2	74	0.043	101	100	120.2	-0.88	0.78	15.54	104.9	161.0	156.9	55.9	160.8	103	71	70	70	0.008	1.001	6.499	683
1770	282.720	281.751		0.16	0.16	1.31	1.04	0.36	83	83	70	2.87	2	74	0.041	103	102	119.9	0.30	0.84	15.54	104.8	160.9	156.7	55.8	160.6	103	71	70	70	0.009	1.001	6.985	733
1771	282.881	281.910		0.16	0.16	1.30	1.03	0.36	83	83	70	2.86	2	74	0.043	101	100	120.1	-0.25	0.84	15.54	104.6	160.7	156.5	55.8	160.5	103	71	70	70	0.008	1.001	6.991	732
1772	283.041	282.070		0.16	0.16	1.31	1.03	0.36	83	83	70	2.86	2	74	0.043	100	100	120.1	0.05	0.86	15.56	104.5	160.6	156.4	55.8	160.3	103	71	70	70	0.008	1.001	7.153	748
1773	283.201	282.229		0.16	0.16	1.30	1.03	0.36	83	83	70	2.87	2	79	0.039	106	105	120.5	-0.36	0.90	15.49	104.4	160.5	156.4	55.8	160.2	103	71	70	70	0.009	1.001	7.472	781
1774	283.361	282.387		0.16	0.16	1.31	1.04	0.36	83	83	70	2.87	2	75	0.045	98	97	120.5	-0.08	0.80	15.46	104.3	160.4	156.2	55.9	160.1	125	71	71	70	0.025	1.001	6.667	696
1775	283.521	282.547		0.16	0.16	1.30	1.04	0.36	83	83	70	2.86	2	74	0.042	101	102	120.7	-0.16	0.82	15.51	104.2	160.3	156.1	55.8	160.0	123	71	70	70	0.011	1.001	6.824	712
1776	283.681	282.706		0.16	0.16	1.30	1.04	0.36	83	83	70	2.87	2	74	0.044	99	99	120.0	0.67	0.86	15.45	104.1	160.2	156.0	55.8	159.9	119	71	70	70	0.011	1.001	7.146	745
1777	283.841	282.865		0.16	0.16	1.31	1.04	0.36	83	83	70	2.87	2	74	0.043	100	100	119.7	0.30	0.72	15.52	103.8	160.0	155.8	56.0	159.8	116	71	70	70	0.010	1.001	6.015	625
1778	284.001	283.025		0.16	0.16	1.31	1.03	0.36	83	83	70	2.87	2	74	0.045	98	98	120.4	-0.71	0.84	15.56	103.9	159.9	155.7	55.8	159.7	113	71	70	70	0.010	1.001	6.984	726
1779	284.161	283.183		0.16	0.16	1.31	1.04	0.36	83	83	70	2.86	2	74	0.045	98	97	119.9	0.53	0.86	15.60	103.7	159.8	155.7	55.8	159.5	111	71	70	70	0.010	1.001	7.142	741
1780	284.321	283.343		0.16	0.16	1.31	1.03	0.36	83	83	70	2.86	2	74	0.040	104	104	120.0	-0.04	0.80	15.63	103.5	159.6	155.5	55.9	159.4	110	71	70	70	0.010	1.001	6.663	691
1781	284.481	283.502		0.16	0.16	1.31	1.03	0.36	83	83	70	2.86	2	74	0.043	100	100	119.0	0.91	0.84	15.50	103.4	159.5	155.3	55.8	159.2	109	71	70	70	0.009	1.001	6.994	724
1782	284.641	283.661		0.16	0.16	1.31	1.03	0.36	83	83	70	2.87	2	82	0.043	101	101	118.9	0.19	0.82	15.50	103.3	159.4	155.3	55.8	159.1	111	71	70	70	0.014	1.001	6.830	707
1783	284.801	283.820		0.16	0.16	1.31	1.04	0.36	83	83	70	2.87	2	86	0.042	102	102	117.6	1.21	0.86	15.55	103.3	159.5	155.3	55.8	159.1	149	71	71	70	0.027	1.001	7.147	740
1784	284.961	283.978		0.16	0.16	1.31	1.04	0.36	83	83	70	2.86	2	88	0.043	101	100	116.9	0.75	0.80	15.52	103.4	159.6	155.4	55.8	159.2	170	71	71	70	0.025	1.001	6.661	690
1785	285.121	284.137		0.16	0.16	1.32	1.04	0.36	83	83	70	2.87	2	92	0.038	108	108	116.4	0.50	0.78	15.48	103.7	159.9	155.8	55.8	159.5	187	71	71	70	0.031	1.001	6.506	675
1786	285.282	284.296		0.16	0.16	1.32	1.03	0.36	83	83	70	2.88	2	97	0.043	103	102	114.6	1.83	0.88	15.55	104.3	160.7	156.4	55.9	160.1	207	72	71	70	0.035	1.001	7.308	763
1787	285.441	284.454		0.16	0.16	1.32	1.04	0.36	83	83	70	2.89	2	100	0.043	102	102	113.7	0.87	0.78	15.62	105.2	161.6	157.3	55.9	161.0	231	72	71	70	0.040	1.001	6.484	683
1788	285.601	284.613		0.16	0.16	1.32	1.03	0.36	83	83	70	2.87	2	103	0.046	99	99	111.7	2.02	0.86	15.42	106.1	162.6	158.3	55.9	162.0	246	72	72	70	0.043	1.001	7.143	759

Elapsed Time	Particulate Sampling Data																Fuel Weight, lb		Flow, gpm		Temperature Data, oF											
	Gas Meter Cubic Feet (1)	Gas Meter Cubic Feet (2)	Gas Meter Cubic Feet (amb)	Sample Rate, cfm (1)	Sample Rate, cfm (2)	Orifice dH (1)	Orifice dH (2)	Orifice dH (amb)	Meter oF (1)	Meter oF (2)	Meter oF (amb)	Meter Vac. In. Hg. (1)	Meter Vac. In. Hg. (2)	Dilution Tunnel Temp.	Dilution Tunnel dP	Pro. Rate (%) (1)	Pro. Rate (%) (2)	Scale Reading	Weight Change	Load Side Liquid Flow Rate	Boiler Side Liquid Flow Rate (optional)	Thermopile ΔT	Boiler to Heat Exch. Temp.	Heat Exch to Boiler Temp.	Inlet Load Temp.	Outlet Load Temp.	Stack	Filter (1)	Filter (2)	Ambient		Specific Heat of Inlet Water (BTU/lb-°F)	Mass Flow Rate of Inlet Water (lb/min)	Heat Output, Btu
1789	285.760	284.770		0.16	0.16	1.31	1.04	0.36	83	83	70	2.89	2	104	0.039	107	106	111.4	0.25	0.78	15.48	107.1	163.6	159.2	55.9	163.0	256	73	72	70	0.041	1.001	6.525	700
1790	285.919	284.928		0.16	0.16	1.31	1.04	0.36	83	83	70	2.89	2	106	0.041	105	105	110.4	1.00	0.80	15.53	108.3	164.9	160.3	55.9	164.2	262	73	72	70	0.046	1.001	6.686	725
1791	286.079	285.087		0.16	0.16	1.31	1.03	0.36	83	83	70	2.89	2	107	0.044	102	102	109.4	0.99	0.84	15.60	109.4	165.9	161.4	55.9	165.3	267	74	72	70	0.047	1.001	6.997	766
1792	286.238	285.244		0.16	0.16	1.32	1.03	0.36	83	83	70	2.88	2	107	0.039	108	107	108.6	0.83	0.82	15.51	110.5	167.1	162.4	55.9	166.5	270	74	73	70	0.043	1.001	6.833	756
1793	286.397	285.403		0.16	0.16	1.31	1.03	0.36	83	83	70	2.89	2	108	0.042	104	104	107.5	1.14	0.90	15.44	111.7	168.2	163.5	55.9	167.6	273	74	73	70	0.046	1.001	7.469	835
1794	286.557	285.560		0.16	0.16	1.31	1.03	0.36	83	83	70	2.89	2	109	0.040	107	105	106.5	0.94	0.82	15.49	113.0	169.5	164.8	55.9	168.9	275	74	73	70	0.043	1.001	6.822	771
1795	286.716	285.718		0.16	0.16	1.31	1.03	0.36	83	83	70	2.89	2	110	0.039	108	108	104.9	1.65	0.82	15.49	114.1	170.8	165.9	56.0	170.1	278	75	73	70	0.044	1.001	6.820	779
1796	286.875	285.875		0.16	0.16	1.31	1.03	0.36	83	83	70	2.91	2	111	0.042	104	103	104.2	0.69	0.86	15.50	115.7	172.2	167.3	55.9	171.6	281	75	74	70	0.044	1.001	7.143	827
1797	287.035	286.032		0.16	0.16	1.31	1.03	0.36	83	83	70	2.91	2	112	0.041	106	104	103.2	0.92	0.82	14.17	117.0	173.6	168.7	55.8	172.9	284	75	74	70	0.046	1.001	6.822	799
1798	287.194	286.190		0.16	0.16	1.30	1.02	0.36	83	83	70	2.91	2	113	0.044	102	102	102.0	1.24	0.84	15.56	118.4	174.9	169.9	55.9	174.3	287	76	74	70	0.049	1.001	6.984	828
1799	287.353	286.347		0.16	0.16	1.30	1.02	0.36	83	83	70	2.90	2	114	0.041	106	105	100.6	1.37	0.82	15.54	119.7	176.3	171.3	55.9	175.6	290	76	75	70	0.048	1.001	6.822	818
1800	287.511	286.504		0.16	0.16	1.30	1.02	0.36	83	83	70	2.91	2	115	0.043	103	102	99.4	1.22	0.80	14.29	121.1	177.8	172.8	56.0	177.1	293	77	75	70	0.049	1.001	6.654	807
1801	287.670	286.660		0.16	0.16	1.30	1.02	0.36	83	83	70	2.93	2	114	0.038	110	108	97.8	1.64	0.82	10.34	122.5	179.3	174.1	56.0	178.4	296	77	76	70	0.048	1.001	6.819	836
1802	287.828	286.818		0.16	0.16	1.30	1.02	0.36	83	83	70	2.93	2	115	0.041	105	105	97.0	0.74	0.82	10.87	123.9	180.5	175.4	56.0	179.8	295	77	76	70	0.046	1.001	6.817	845
1803	287.987	286.973		0.16	0.16	1.29	1.01	0.36	83	83	70	2.94	2	116	0.041	106	103	95.7	1.34	0.78	8.36	125.4	182.0	176.9	56.0	181.3	296	78	77	70	0.051	1.001	6.498	815
1804	288.145	287.130		0.16	0.16	1.30	1.02	0.36	83	83	70	2.93	2	106	0.044	101	100	95.0	0.73	0.82	7.18	126.3	182.9	177.7	56.0	182.3	299	78	77	70	0.053	1.001	6.818	862
1805	288.305	287.286		0.16	0.16	1.29	1.01	0.36	83	83	70	2.93	2	91	0.037	110	107	94.8	0.19	0.78	7.77	126.9	183.4	178.2	55.9	182.9	290	78	76	70	0.038	1.001	6.496	825
1806	288.463	287.443		0.16	0.16	1.29	1.00	0.36	83	83	70	2.91	2	87	0.042	101	101	94.6	0.18	0.82	8.35	127.2	183.7	178.5	55.9	183.2	258	77	75	70	0.037	1.001	6.820	869
1807	288.622	287.599		0.16	0.16	1.28	1.01	0.36	83	83	70	2.91	2	85	0.043	101	99	94.0	0.54	0.82	6.42	127.7	184.1	178.9	55.9	183.6	241	77	74	70	0.035	1.001	6.819	872
1808	288.781	287.757		0.16	0.16	1.28	1.01	0.36	83	83	70	2.90	2	84	0.046	97	97	94.0	0.02	0.88	7.04	127.9	184.3	179.1	55.9	183.9	230	76	74	70	0.035	1.001	7.310	936
1809	288.940	287.913		0.16	0.16	1.29	1.01	0.36	83	83	70	2.90	2	80	0.042	101	100	93.4	0.59	0.82	3.89	128.1	184.5	179.2	56.0	184.0	223	75	74	70	0.033	1.001	6.822	875
1810	289.099	288.070		0.16	0.16	1.29	1.01	0.36	83	83	70	2.89	2	79	0.044	99	98	93.4	0.06	0.86	3.90	128.3	184.7	179.5	55.9	184.2	219	75	73	70	0.034	1.001	7.143	917
1811	289.258	288.229		0.16	0.16	1.30	1.02	0.36	83	83	70	2.89	2	78	0.039	105	105	92.9	0.48	0.84	2.64	128.4	184.8	179.7	56.0	184.3	214	74	73	70	0.031	1.001	6.981	897
1812	289.417	288.386		0.16	0.16	1.30	1.02	0.36	83	83	70	2.89	2	78	0.044	99	98	93.3	-0.37	0.82	4.74	128.6	184.9	179.7	56.0	184.5	210	74	73	70	0.031	1.001	6.823	878
1813	289.577	288.545		0.16	0.16	1.30	1.02	0.36	83	83	70	2.89	2	78	0.043	101	100	92.6	0.65	0.86	6.48	128.7	185.0	179.8	55.9	184.7	207	74	73	70	0.030	1.001	7.142	921
1814	289.737	288.702		0.16	0.16	1.30	1.02	0.36	83	83	70	2.89	2	77	0.044	99	98	92.9	-0.30	0.82	5.19	128.8	185.2	179.9	55.9	184.7	204	74	73	70	0.030	1.001	6.823	880
1815	289.897	288.861		0.16	0.16	1.30	1.03	0.36	83	83	70	2.88	2	75	0.039	105	105	92.5	0.46	0.84	3.39	128.9	185.2	180.0	55.9	184.7	202	74	73	70	0.029	1.001	6.982	901
1816	290.056	289.020		0.16	0.16	1.30	1.02	0.36	83	83	70	2.86	2	75	0.043	100	100	92.5	0.00	0.88	1.31	128.9	185.2	180.0	55.9	184.7	201	74	73	70	0.030	1.001	7.308	943
1817	290.216	289.178		0.16	0.16	1.30	1.03	0.36	83	83	70	2.87	2	75	0.045	98	97	92.6	-0.14	0.78	3.55	129.0	185.2	180.0	55.9	184.8	200	74	73	70	0.032	1.001	6.518	842
1818	290.376	289.337		0.16	0.16	1.30	1.03	0.36	83	83	70	2.87	2	75	0.045	98	98	92.1	0.52	0.84	1.98	128.9	185.2	180.0	55.9	184.8	198	73	73	70	0.033	1.001	7.016	906
1819	290.536	289.495		0.16	0.16	1.30	1.03	0.36	83	83	70	2.86	2	75	0.043	100	99	92.2	-0.10	0.83	7.73	128.9	185.2	180.0	55.9	184.7	195	73	73	70	0.033	1.001	6.930	894
1820	290.695	289.654		0.16	0.16	1.31	1.03	0.36	83	83	70	2.86	2	75	0.046	96	97	92.6	-0.44	0.79	4.80	128.9	185.2	180.1	55.8	184.8	193	73	73	70	0.034	1.001	6.557	846
1821	290.855	289.813		0.16	0.16	1.30	1.02	0.36	83	83	70	2.86	2	75	0.045	98	98	92.5	0.12	0.85	2.93	129.0	185.2	180.0	55.8	184.8	190	73	72	70	0.035	1.001	7.073	913
1822	291.015	289.971		0.16	0.16	1.30	1.03	0.36	83	83	70	2.86	2	75	0.044	99	98	92.5	0.04	0.86	1.25	128.9	185.1	179.9	55.9	184.7	188	73	72	70	0.035	1.001	7.133	920
1823	291.175	290.130		0.16	0.16	1.31	1.03	0.36	83	83	70	2.86	2	75	0.046	97	97	91.9	0.60	0.78	3.70	128.9	185.2	180.0	55.9	184.7	186	73	72	70	0.034	1.001	6.500	839
1824	291.335	290.289		0.16	0.16	1.31	1.03	0.36	83	83	70	2.86	2	75	0.042	101	101	92.1	-0.25	0.93	1.77	128.8	185.1	179.8	55.9	184.6	184	73	72	70	0.036	1.001	7.768	1001
1825	291.495	290.447		0.16	0.16	1.30	1.03	0.36	83	83	70	2.86	2	75	0.043	100	99	92.1	-0.01	0.81	2.63	128.7	185.0	179.8	55.9	184.6	182	73	72	70	0.035	1.001	6.718	866
1826	291.655	290.607		0.16	0.16	1.30	1.03	0.36	83	83	70	2.86	2	75	0.043	100	101	92.4	-0.26	0.82	1.78	128.7	185.0	179.8	55.9	184.6	179	72	72	70	0.034	1.001	6.822	879
1827	291.815	290.765		0.16	0.16	1.31	1.03	0.36	83	83	70	2.88	2	75	0.042	101	100	92.3	0.11	0.88	5.92	128.7	185.0	179.8	55.9	184.6	178	72	72	70	0.034	1.001	7.311	942
1828	291.975	290.923		0.16	0.16	1.31	1.03	0.36	83	83	70	2.87	2	75	0.044	99	98	91.9	0.40	0.82	7.53	128.8	184.9	179.7	55.9	184.7	176	72	72	70	0.033	1.001	6.825	880
1829	292.136	291.082		0.16	0.16	1.30	1.03	0.36	83	83	70	2.87	2	75	0.042	102	101	92.2	-0.30	0.84	3.16	128.6	184.9	179.8	55.9	184.4	174	72	72	70	0.032	1.001	6.984	899
1830	292.295	291.240		0.16	0.16	1.31	1.03	0.36	83	83	70	2.87	2	74	0.044	98	98	92.0	0.22	0.78	2.64	128.6	184.9	179.6	55.9	184.4	172	72	72	70	0.031	1.001	6.496	836
1831	292.455	291.400		0.16	0.16	1.30	1.03	0.36	83	83	70	2.87	2	74	0.042	101	102	91.8	0.15	0.86	2.80	128.5	184.8	179.5	55.9	184.4	170	72	72	70	0.031	1.001	7.146	920
1832	292.615	291.558		0.16	0.16	1.30	1.03	0.36	83	83	70	2.87	2	74	0.047	96	95	91.7	0.15	0.78	2.46	128.3	184.7	179.4	56.0	184.3	169	72	72	70	0.030	1.001	6.500	835
1833	292.775	291.716		0.16	0.16	1.30	1.03	0.36	83	83	70	2.88	2	74	0.045	98	97	92.1	-0.40	0.80	4.60	128.5	184.7	179.4	55.8	184.3	168	72	72	70	0.029	1.001	6.662	857
1834	292.935	291.876		0.16	0.16	1.30	1.03	0.36	83	83	70	2.87	2	74	0.045	98	98	91.6	0.46	0.80	1.87	128.4	184.5	179.3	55.8	184.2	167	72	72	70	0.029	1.001	6.660	856
1835	293.095	292.034		0.16	0.16	1.31	1.03	0.36	83	83	70	2.86	2	74	0.045	98	97	92.2	-0.55	0.86	0.88	128.2	184.5	179.3	55.8	184.1	165	72	71	70	0.029	1.001	7.146	917
1836	293.255	292.193		0.16	0.16	1.31	1.03	0.36	83	83	70	2.87	2	75	0.042	101	101	91.6	0.56	0.78	5.59	128.2	184.4	179.3	55.8	184.0	163	72	71	70	0.029	1.001	6.496	834
1837	293.414	292.352		0.16	0.16	1.31	1.02	0.36	83	83	70	2.87	2	74	0.043	100	100	91.8	-0.16	0.82	4.24	128.1	184.4	179.2	55.8	183.9	162	72	71	70	0.028	1.001	6.823	875
1838	293.574	292.510		0.16	0.16	1.31	1.03	0.36	83	83	70	2.87	2	74	0.042	101	100	92.1	-0.34	0.84	3.62	128.0	184.3	179.2	55.8	183.8	161	72	71	70	0.028	1.001	6.982	895
1839	293.734	292.670		0.16	0.16	1.30	1.03	0.36	83	83	70	2.87	2	74	0.041	103	103	91.7	0.45	0.86	3.92	127.9	184.1	179.0	55.8	183.7	160	72	71	70	0.027	1.001	7.144	915
1840	293.894	292.828		0.16	0.16	1.30	1.03	0.36	83	83	70	2.86	2	74	0.045	98	97	91.5	0.16	0.84	10.68	127.9	184.2	179.1	55.9	183.7	158	72	71	70	0.026	1.001	6.988	895
1841	294.054	292.986		0.16	0.16	1.30	1.03	0.36	83	83	70	2.87	2	74	0.042	101	100	92.3	-0.82	0.82	5.89	127.8	184.1	179.0	55.9	183.7	157	71	71	70	0.026	1.001	6.821	873
1842	294.215	293.145		0.16	0.16	1.30	1.03	0.36	83	83	70	2.87	2	74	0.041	103	102	91.8	0.56	0.82	1.99	127.8	183.9	178.8	55.8	183.6	157	71	71	70	0.026	1.001	6.824	873
1843	294.375	293.303		0.16	0.16	1.30	1.03	0.36	83	83	70	2.86	2	75	0.045	98	97	91.8	-0.09	0.84	2.63	127.7	183.9	178.7	55.9	183.6	154	71	71	70	0.025	1.001	6.988	893
1844	294.535	293.463		0.16	0.16	1.31	1.03	0.36	83	83	70	2.87	2	74	0.044	99	99	92.1	-0.26	0.84	3.12	127.6	183.8	178.6	55.8	183.4	157	71	71	70	0.025	1.001	6.984	892
1845	294.695	293.621		0.16	0.16	1.31	1.03	0.36	83	83	70	2.86	2	75	0.043	100	99	92.2	-0.10	0.82	5.88	127.5	183.7	178.5	55.8	183.3	154	71	71	70	0.024	1.001	6.826	871
1846	294.855	293.780		0.16	0.16	1.30	1.03	0.36	83	83	70	2.88	2	74	0.045	98	98	92.1	0.07	0.80	4.35	127.4	183.6	178.5	55.8	183.3	152	71	71	70	0.024	1.001	6.662	850
1847	295.014	293.939		0.16	0.16	1.30	1.03	0.36	83	83	70	2.86	2	74	0.037	107	108	91.1	1.02	0.86	4.81	127.3	183.6	178.3	55.9	183.2	153	71	71	70	0.023	1.001	7.145	911
1848	295.174	294.097		0.16	0.16	1.30	1.03	0.36	83	83	70	2.87	2	74	0.046	97	96	92.1	-0.98	0.78	6.40	127.2	183.5	178.3	55.9	183.1	152	71	71	70	0.023	1.001	6.482	825
1849	295.334	294.256		0.16	0.16	1.30	1.03	0.36	83	83	70	2.87	2	74	0.046	97	96	91.7	0.38	0.82	7.74	127.2	183.4	178.2	55.9	183.0	150	71	71	70	0.023	1.001	6.822	869
1850	295.494	294.415		0.16	0.16	1.30	1.03	0.36	83	83	70	2.87	2	74	0.045	98	98	92.4	-0.70	0.84	6.47	127.1	183.3	178.1	55.8	182.9	150	71	71	70	0.022	1.001	6.983	888

Elapsed Time	Particulate Sampling Data																Fuel Weight, lb		Flow, gpm		Temperature Data, oF												
	Gas Meter Cubic Feet (1)	Gas Meter Cubic Feet (2)	Gas Meter Cubic Feet (amb)	Sample Rate, cfm (1)	Sample Rate, cfm (2)	Orifice dH (1)	Orifice dH (2)	Orifice dH (amb)	Meter oF (1)	Meter oF (2)	Meter oF (amb)	Meter Vac. In. Hg. (1)	Meter Vac. In. Hg. (2)	Dilution Tunnel Temp.	Dilution Tunnel dP	Pro. Rate (%) (1)	Pro. Rate (%) (2)	Scale Reading	Weight Change	Load Side Liquid Flow Rate	Boiler Side Liquid Flow Rate (optional)	Thermopile ΔT	Boiler to Heat Exch. Temp.	Heat Exch to Boiler Temp.	Inlet Load Temp.	Outlet Load Temp.	Stack	Filter (1)	Filter (2)	Ambient		Specific Heat of Inlet Water (BTU/lb-°F)	Mass Flow Rate of Inlet Water (lb/min)	Heat Output, Btu
1851	295.654	294.573		0.16	0.16	1.31	1.03	0.36	83	83	70	2.87	2	74	0.046	97	96	92.0	0.41	0.82	3.14	127.0	183.3	178.1	55.8	182.9	151	71	71	70	0.022	1.001	6.823	868
1852	295.813	294.733		0.16	0.16	1.30	1.03	0.36	83	83	70	2.86	2	74	0.044	98	99	91.9	0.16	0.81	2.45	126.9	183.2	178.0	55.9	182.8	147	71	71	70	0.022	1.001	6.753	858
1853	295.974	294.891		0.16	0.16	1.31	1.03	0.36	83	83	70	2.87	2	74	0.046	97	96	92.1	-0.26	0.81	7.77	126.9	183.0	177.9	55.8	182.7	149	71	71	70	0.022	1.001	6.725	854
1854	296.133	295.049		0.16	0.16	1.30	1.03	0.36	83	83	70	2.86	2	74	0.042	101	100	92.4	-0.24	0.85	9.93	126.8	183.0	177.9	55.8	182.6	148	71	71	70	0.021	1.001	7.124	904
1855	296.293	295.208		0.16	0.16	1.31	1.03	0.36	83	83	70	2.87	2	74	0.043	100	100	91.7	0.68	0.83	6.46	126.7	182.9	177.8	55.9	182.6	145	71	71	70	0.020	1.001	6.930	879
1856	296.454	295.367		0.16	0.16	1.30	1.03	0.36	83	83	70	2.86	2	74	0.044	100	99	92.4	-0.74	0.83	9.05	126.6	182.8	177.6	55.9	182.4	144	71	71	70	0.021	1.001	6.950	881
1857	296.614	295.526		0.16	0.16	1.29	1.03	0.36	83	83	70	2.86	2	74	0.041	103	102	91.9	0.53	0.84	5.20	126.5	182.7	177.6	55.9	182.4	145	71	71	70	0.020	1.001	6.972	883
1858	296.774	295.684		0.16	0.16	1.30	1.03	0.36	83	83	70	2.86	2	74	0.044	99	98	92.2	-0.31	0.82	4.45	126.3	182.6	177.4	55.9	182.2	143	71	71	70	0.019	1.001	6.820	863
1859	296.934	295.843		0.16	0.16	1.31	1.03	0.36	83	83	70	2.87	2	74	0.046	97	96	91.9	0.30	0.78	3.63	126.3	182.5	177.3	55.9	182.2	141	71	71	70	0.020	1.001	6.500	822
1860	297.094	296.002		0.16	0.16	1.31	1.03	0.36	83	83	70	2.86	2	74	0.043	100	100	92.5	-0.64	0.84	7.76	126.1	182.4	177.2	56.0	182.0	143	71	71	70	0.019	1.001	6.983	881
1861	297.254	296.160		0.16	0.16	1.30	1.03	0.36	83	83	70	2.87	2	74	0.041	103	102	92.1	0.50	0.86	6.82	126.1	182.3	177.1	55.8	181.9	140	71	71	70	0.019	1.001	7.149	903
1862	297.413	296.319		0.16	0.16	1.30	1.03	0.36	83	83	70	2.86	2	74	0.048	94	94	92.1	-0.08	0.82	7.59	125.9	182.2	177.2	55.9	181.8	138	71	71	70	0.018	1.001	6.828	861
1863	297.573	296.478		0.16	0.16	1.30	1.03	0.36	83	83	70	2.86	2	74	0.043	100	100	91.7	0.43	0.80	11.60	125.9	182.1	177.1	55.9	181.8	139	71	71	70	0.018	1.001	6.660	839
1864	297.733	296.636		0.16	0.16	1.30	1.03	0.36	83	83	70	2.87	2	74	0.042	101	100	92.7	-0.98	0.90	2.64	125.8	182.0	176.9	55.9	181.7	140	71	71	70	0.017	1.001	7.473	941
1865	297.893	296.796		0.16	0.16	1.30	1.03	0.36	83	83	70	2.86	2	74	0.039	105	105	91.9	0.80	0.86	7.76	125.6	181.9	176.8	55.9	181.5	138	71	71	70	0.018	1.001	7.145	899
1866	298.053	296.954		0.16	0.16	1.31	1.03	0.36	83	83	70	2.87	2	74	0.042	101	100	92.0	-0.13	0.80	7.76	125.5	181.8	176.8	55.9	181.4	136	71	70	70	0.018	1.001	6.663	837
1867	298.213	297.113		0.16	0.16	1.31	1.03	0.36	83	83	70	2.87	2	74	0.045	98	98	92.2	-0.23	0.80	4.17	125.5	181.7	176.6	55.9	181.4	136	71	70	70	0.017	1.001	6.662	837
1868	298.372	297.272		0.16	0.16	1.30	1.03	0.36	83	83	70	2.86	2	74	0.043	100	100	92.2	0.02	0.86	4.82	125.3	181.6	176.5	55.8	181.2	134	71	70	70	0.017	1.001	7.147	897
1869	298.532	297.430		0.16	0.16	1.31	1.03	0.36	83	83	70	2.86	2	74	0.043	100	99	92.6	-0.42	0.84	9.60	125.3	181.5	176.5	55.9	181.2	135	71	70	70	0.017	1.001	6.981	876
1870	298.693	297.589		0.16	0.16	1.31	1.03	0.36	83	83	70	2.86	2	74	0.040	104	103	92.3	0.31	0.80	8.37	125.1	181.4	176.4	55.9	181.0	133	71	70	70	0.017	1.001	6.661	834
1871	298.853	297.748		0.16	0.16	1.30	1.02	0.36	83	83	70	2.87	2	74	0.039	105	105	92.0	0.30	0.78	6.37	125.0	181.3	176.3	55.9	180.9	133	71	70	70	0.016	1.001	6.498	813
1872	299.013	297.906		0.16	0.16	1.30	1.03	0.36	83	83	70	2.86	2	74	0.039	105	104	92.4	-0.33	0.84	4.76	124.9	181.2	176.1	55.9	180.8	133	71	70	70	0.016	1.001	6.987	874
1873	299.173	298.066		0.16	0.16	1.30	1.03	0.36	83	83	70	2.86	2	74	0.044	99	99	92.0	0.34	0.84	9.02	124.8	181.1	176.0	55.9	180.7	133	71	71	70	0.015	1.001	6.984	873
1874	299.333	298.224		0.16	0.16	1.30	1.03	0.36	83	83	70	2.87	2	74	0.043	100	99	91.7	0.31	0.80	10.63	124.7	180.9	175.9	55.8	180.6	132	71	70	70	0.015	1.001	6.659	831
1875	299.492	298.381		0.16	0.16	1.29	1.02	0.36	83	83	70	2.89	2	82	0.043	100	99	91.9	-0.16	0.88	12.12	124.5	180.8	175.7	55.9	180.4	131	71	70	70	0.015	1.001	7.304	910
1876	299.652	298.540		0.16	0.16	1.30	1.02	0.36	83	83	70	2.87	2	74	0.043	100	100	91.9	-0.01	0.82	6.00	124.5	180.8	175.7	55.9	180.4	156	72	72	70	0.023	1.001	6.821	850
1877	299.811	298.698		0.16	0.16	1.30	1.03	0.36	83	83	70	2.86	2	74	0.043	100	99	92.1	-0.24	0.86	6.47	124.5	180.7	175.6	55.9	180.3	150	71	70	70	0.021	1.001	7.149	891
1878	299.972	298.858		0.16	0.16	1.30	1.03	0.36	83	83	70	2.86	2	74	0.045	99	98	92.4	-0.27	0.88	7.77	124.4	180.6	175.5	55.8	180.3	146	71	70	70	0.020	1.001	7.307	910
1879	300.131	299.016		0.16	0.16	1.30	1.03	0.36	83	83	70	2.86	2	74	0.042	101	100	91.2	1.15	0.86	9.06	124.3	180.5	175.5	55.8	180.1	142	71	70	70	0.018	1.001	7.128	887
1880	300.291	299.175		0.16	0.16	1.31	1.03	0.36	83	83	70	2.87	2	74	0.044	99	99	92.0	-0.73	0.82	8.92	124.2	180.3	175.3	55.8	180.0	140	71	71	70	0.018	1.001	6.822	848
1881	300.451	299.335		0.16	0.16	1.31	1.03	0.36	83	83	70	2.86	2	74	0.043	100	100	91.6	0.36	0.84	8.35	124.0	180.2	175.2	55.8	179.8	137	71	70	70	0.017	1.001	6.970	865
1882	300.611	299.493		0.16	0.16	1.31	1.03	0.36	83	83	70	2.86	2	74	0.040	104	103	91.8	-0.20	0.82	9.07	123.9	180.1	175.2	55.8	179.8	137	71	70	70	0.017	1.001	6.801	844
1883	300.771	299.652		0.16	0.16	1.31	1.03	0.36	83	83	70	2.87	2	74	0.044	99	99	92.5	-0.69	0.85	10.38	123.8	180.0	175.0	55.8	179.7	135	71	70	70	0.016	1.001	7.098	880
1884	300.932	299.811		0.16	0.16	1.31	1.03	0.36	83	83	70	2.86	2	74	0.042	102	101	92.1	0.39	0.80	12.91	123.7	179.9	174.9	55.8	179.5	135	71	70	70	0.015	1.001	6.660	825
1885	301.092	299.969		0.16	0.16	1.30	1.03	0.36	83	83	70	2.86	2	74	0.042	101	100	91.7	0.38	0.80	8.43	123.5	179.8	174.8	55.9	179.4	133	71	70	70	0.015	1.001	6.665	824
1886	301.252	300.129		0.16	0.16	1.30	1.03	0.36	83	83	70	2.86	2	74	0.044	99	99	92.1	-0.33	0.80	12.98	123.5	179.6	174.6	55.8	179.3	131	71	70	70	0.015	1.001	6.666	824
1887	301.412	300.287		0.16	0.16	1.31	1.03	0.36	83	83	70	2.87	2	74	0.043	100	99	92.2	-0.17	0.87	11.65	123.4	179.5	174.6	55.8	179.2	130	71	70	70	0.015	1.001	7.280	899
1888	301.572	300.446		0.16	0.16	1.31	1.03	0.36	83	83	70	2.86	2	74	0.044	99	99	92.0	0.25	0.82	9.10	123.2	179.4	174.5	55.8	179.1	129	71	70	70	0.014	1.001	6.815	841
1889	301.732	300.605		0.16	0.16	1.30	1.03	0.36	83	83	70	2.85	2	74	0.043	100	100	91.7	0.27	0.80	8.38	123.1	179.3	174.3	55.8	178.9	129	71	70	70	0.014	1.001	6.669	822
1890	301.892	300.764		0.16	0.16	1.30	1.03	0.36	83	83	70	2.86	2	74	0.042	101	101	91.7	0.00	0.88	9.05	123.0	179.2	174.3	55.8	178.8	129	71	70	70	0.014	1.001	7.311	900
1891	302.052	300.923		0.16	0.16	1.30	1.03	0.36	83	83	70	2.87	2	74	0.044	99	99	91.8	-0.07	0.82	10.35	122.8	179.0	174.2	55.8	178.7	126	71	70	70	0.014	1.001	6.816	838
1892	302.212	301.082		0.16	0.16	1.30	1.03	0.36	83	83	70	2.87	2	74	0.042	101	101	91.5	0.29	0.86	6.05	122.6	178.8	173.9	55.9	178.5	126	71	70	70	0.013	1.001	7.145	877
1893	302.372	301.240		0.16	0.16	1.31	1.03	0.36	83	83	70	2.87	2	74	0.044	99	98	92.1	-0.63	0.84	12.89	122.4	178.7	173.8	55.9	178.3	126	71	70	70	0.013	1.001	6.985	856
1894	302.531	301.400		0.16	0.16	1.31	1.03	0.36	83	83	70	2.86	2	74	0.041	102	103	91.8	0.29	0.84	11.07	122.5	178.6	173.6	55.9	178.4	126	71	70	70	0.014	1.001	6.983	856
1895	302.691	301.558		0.16	0.16	1.30	1.03	0.36	83	83	70	2.87	2	74	0.046	97	96	91.7	0.18	0.88	11.54	122.4	178.6	173.6	55.8	178.2	123	71	70	70	0.014	1.001	7.309	896
1896	302.851	301.717		0.16	0.16	1.31	1.03	0.36	83	83	70	2.87	2	74	0.045	98	98	92.0	-0.34	0.82	14.22	122.2	178.4	173.4	55.8	178.1	125	71	70	70	0.013	1.001	6.825	835
1897	303.012	301.876		0.16	0.16	1.31	1.03	0.36	83	83	70	2.86	2	74	0.043	101	100	92.3	-0.27	0.84	14.23	122.1	178.3	173.3	55.9	178.0	123	71	70	70	0.012	1.001	6.986	854
1898	303.171	302.035		0.16	0.16	1.31	1.03	0.36	83	83	70	2.86	2	74	0.045	97	98	92.2	0.08	0.82	12.07	122.0	178.3	173.3	55.8	177.9	124	71	70	70	0.012	1.001	6.818	833
1899	303.332	302.194		0.16	0.16	1.31	1.03	0.36	83	83	70	2.85	2	74	0.045	99	98	92.1	0.09	0.84	10.33	121.9	178.1	173.1	55.8	177.7	122	71	70	70	0.012	1.001	6.982	852
1900	303.492	302.353		0.16	0.16	1.30	1.03	0.36	83	83	70	2.87	2	74	0.046	97	96	91.7	0.36	0.78	12.12	121.7	178.0	173.1	55.9	177.6	122	71	70	70	0.012	1.001	6.498	792
1901	303.652	302.511		0.16	0.16	1.31	1.03	0.36	83	83	70	2.86	2	74	0.043	100	99	91.9	-0.19	0.78	12.92	121.5	177.7	172.9	55.9	177.4	122	71	70	70	0.012	1.001	6.498	791
1902	303.813	302.671		0.16	0.16	1.31	1.03	0.36	83	83	70	2.87	2	74	0.040	104	104	92.0	-0.13	0.82	10.35	121.5	177.7	172.9	55.8	177.3	121	71	70	70	0.012	1.001	6.819	830
1903	303.972	302.829		0.16	0.16	1.30	1.03	0.36	83	83	70	2.87	2	74	0.041	102	102	91.9	0.18	0.80	13.08	121.3	177.5	172.6	55.8	177.2	119	71	70	70	0.012	1.001	6.657	808
1904	304.132	302.988		0.16	0.16	1.30	1.03	0.36	83	83	70	2.87	2	74	0.046	97	96	91.9	-0.07	0.86	11.58	121.3	177.4	172.6	55.8	177.1	117	71	70	70	0.012	1.001	7.148	868
1905	304.292	303.148		0.16	0.16	1.30	1.03	0.36	83	83	70	2.87	2	74	0.047	96	96	91.8	0.10	0.80	12.90	121.1	177.3	172.5	55.8	176.9	120	71	70	70	0.012	1.001	6.666	808
1906	304.451	303.305		0.16	0.16	1.30	1.02	0.36	83	83	70	2.88	2	79	0.043	100	99	92.0	-0.15	0.84	12.06	121.0	177.2	172.3	55.8	176.8	123	71	70	70	0.022	1.001	6.985	846
1907	304.611	303.464		0.16	0.16	1.30	1.03	0.36	83	83	70	2.86	2	74	0.043	100	100	92.0	0.03	0.86	12.88	120.9	177.1	172.2	55.8	176.8	149	71	71	70	0.019	1.001	7.146	865
1908	304.771	303.623		0.16	0.16	1.30	1.03	0.36	83	83	70	2.87	2	74	0.040	104	103	91.3	0.64	0.84	14.00	120.8	177.0	172.2	55.8	176.6	141	71	70	70	0.018	1.001	6.986	845
1909	304.931	303.781		0.16	0.16	1.31	1.03	0.36	83	83	70	2.86	2	74	0.044	99	98	91.9	-0.60	0.82	11.88	120.7	177.0	172.3	55.8	176.5	135	71	70	70	0.016	1.001	6.828	825
1910	305.091	303.941		0.16	0.16	1.31	1.03	0.36	83	83	70	2.86	2	74	0.044	99	99	91.9	0.00	0.78	11.92	120.7	176.8	172.0	55.8	176.5	132	71	70	70	0.015	1.001	6.511	787
1911	305.251	304.099		0.16	0.16	1.30	1.03	0.36	83	83	70	2.85	2	74	0.043	100	99	91.7	0.26	0.80	11.63	120.4	176.6	171.7	55.9	176.3	130	71	70	70	0.015	1.001	6.648	802
1912	305.411	304.258		0.16	0.16	1.31	1.03	0.36	83	83	70	2.86	2	74	0.042	101	101	91.5	0.17	0.85	12.89	120.4	176.6	171.8	55.8	176.2	128	71	70	70	0.014	1.001	7.080	853

Elapsed Time	Particulate Sampling Data																Fuel Weight, lb		Flow, gpm		Temperature Data, oF												
	Gas Meter Cubic Feet (1)	Gas Meter Cubic Feet (2)	Gas Meter Cubic Feet (amb)	Sample Rate, cfm (1)	Sample Rate, cfm (2)	Orifice dH (1)	Orifice dH (2)	Orifice dH (amb)	Meter oF (1)	Meter oF (2)	Meter oF (amb)	Meter Vac. In. Hg. (1)	Meter Vac. In. Hg. (2)	Dilution Tunnel Temp.	Dilution Tunnel dP	Pro. Rate (%) (1)	Pro. Rate (%) (2)	Scale Reading	Weight Change	Load Side Liquid Flow Rate	Boiler Side Liquid Flow Rate (optional)	Thermopile ΔT	Boiler to Heat Exch. Temp.	Heat Exch to Boiler Temp.	Inlet Load Temp.	Outlet Load Temp.	Stack	Filter (1)	Filter (2)	Ambient		Specific Heat of Inlet Water (BTU/lb-°F)	Mass Flow Rate of Inlet Water (lb/min)	Heat Output, Btu
1913	305.571	304.418		0.16	0.16	1.31	1.03	0.36	83	83	70	2.86	2	74	0.045	98	98	91.3	0.22	0.80	14.18	120.2	176.4	171.5	55.8	176.1	127	71	70	70	0.014	1.001	6.644	800
1914	305.732	304.576		0.16	0.16	1.31	1.03	0.36	83	83	70	2.86	2	74	0.041	103	102	92.0	-0.77	0.87	12.94	120.1	176.3	171.4	55.8	175.9	125	71	70	70	0.013	1.001	7.258	873
1915	305.892	304.735		0.16	0.16	1.31	1.03	0.36	83	83	70	2.86	2	74	0.043	100	100	92.0	0.01	0.85	14.18	120.0	176.2	171.3	55.8	175.8	123	71	70	70	0.012	1.001	7.059	848
1916	306.052	304.894		0.16	0.16	1.30	1.03	0.36	83	83	70	2.85	2	74	0.042	101	101	92.2	-0.16	0.86	12.55	119.9	176.0	171.2	55.8	175.7	122	71	70	70	0.012	1.001	7.152	858
1917	306.212	305.053		0.16	0.16	1.30	1.03	0.36	83	83	70	2.86	2	74	0.043	100	100	92.2	-0.03	0.86	11.60	119.7	175.9	171.1	55.8	175.5	121	71	70	70	0.012	1.001	7.201	863
1918	306.372	305.212		0.16	0.16	1.30	1.03	0.36	83	83	70	2.87	2	74	0.043	100	100	92.3	-0.04	0.89	15.44	119.5	175.7	170.9	55.9	175.4	120	71	70	70	0.012	1.001	7.390	884
1919	306.532	305.370		0.16	0.16	1.30	1.03	0.36	83	83	70	2.85	2	74	0.044	99	98	92.0	0.24	0.82	14.11	119.5	175.6	170.8	55.8	175.3	119	71	70	70	0.013	1.001	6.817	816
1920	306.692	305.529		0.16	0.16	1.30	1.03	0.36	83	83	70	2.87	2	74	0.045	98	98	91.7	0.29	0.84	13.54	119.3	175.5	170.6	55.8	175.1	118	71	70	70	0.012	1.001	6.991	835
1921	306.851	305.688		0.16	0.16	1.30	1.03	0.36	83	83	70	2.86	2	74	0.042	101	101	92.1	-0.41	0.84	13.92	119.2	175.4	170.5	55.8	175.1	118	71	70	70	0.012	1.001	6.994	835
1922	307.011	305.847		0.16	0.16	1.30	1.03	0.36	83	83	70	2.85	2	74	0.043	100	100	91.6	0.52	0.82	14.29	119.1	175.2	170.5	55.8	174.9	117	71	70	70	0.012	1.001	6.829	814
1923	307.171	306.006		0.16	0.16	1.30	1.03	0.36	82	83	70	2.87	2	74	0.045	98	98	91.7	-0.04	0.86	15.38	119.1	175.1	170.3	55.8	174.9	117	71	70	70	0.011	1.001	7.152	853
1924	307.331	306.165		0.16	0.16	1.31	1.02	0.36	83	83	70	2.86	2	74	0.044	99	99	92.2	-0.49	0.84	14.08	118.9	175.0	170.2	55.8	174.7	117	71	70	70	0.011	1.001	6.986	832
1925	307.491	306.323		0.16	0.16	1.31	1.03	0.36	83	83	70	2.86	2	74	0.043	100	99	91.9	0.24	0.82	14.35	118.7	174.9	170.0	55.8	174.5	116	71	70	70	0.011	1.001	6.825	811
1926	307.651	306.483		0.16	0.16	1.31	1.03	0.36	83	83	70	2.87	2	74	0.046	97	97	91.9	0.04	0.84	15.32	118.5	174.7	169.8	55.8	174.4	115	71	70	70	0.011	1.001	6.986	829
1927	307.811	306.641		0.16	0.16	1.31	1.03	0.36	83	83	70	2.85	2	74	0.045	98	97	91.7	0.20	0.80	14.22	118.5	174.6	169.9	55.8	174.3	113	71	70	70	0.011	1.001	6.668	791
1928	307.971	306.800		0.16	0.16	1.30	1.03	0.36	83	83	70	2.87	2	74	0.044	99	99	91.8	-0.08	0.86	14.55	118.4	174.6	169.8	55.8	174.2	113	71	70	70	0.011	1.001	7.152	848
1929	308.132	306.959		0.16	0.16	1.31	1.03	0.36	82	83	70	2.86	2	74	0.043	101	100	92.0	-0.28	0.80	14.22	118.2	174.4	169.6	55.8	174.0	112	71	70	70	0.011	1.001	6.660	788
1930	308.292	307.118		0.16	0.16	1.30	1.03	0.36	83	83	70	2.87	2	74	0.043	100	100	91.7	0.37	0.78	14.18	118.0	174.2	169.4	55.8	173.8	112	71	70	70	0.011	1.001	6.503	768
1931	308.452	307.277		0.16	0.16	1.30	1.03	0.36	82	83	70	2.86	2	74	0.041	103	102	91.6	0.01	0.84	14.24	117.9	174.1	169.3	55.8	173.8	112	71	70	70	0.011	1.001	6.984	825
1932	308.612	307.436		0.16	0.16	1.30	1.03	0.36	83	83	70	2.86	2	74	0.045	98	98	92.1	-0.44	0.82	14.23	117.8	173.9	169.1	55.8	173.6	111	71	70	70	0.011	1.001	6.826	805
1933	308.772	307.594		0.16	0.16	1.30	1.03	0.36	82	83	70	2.86	2	74	0.044	99	98	91.9	0.16	0.78	15.52	117.7	173.8	169.1	55.8	173.5	111	71	70	70	0.011	1.001	6.500	766
1934	308.932	307.754		0.16	0.16	1.30	1.03	0.36	83	83	70	2.86	2	74	0.045	98	98	91.8	0.12	0.80	15.48	117.6	173.7	169.0	55.8	173.4	111	71	70	70	0.011	1.001	6.661	784
1935	309.091	307.912		0.16	0.16	1.30	1.03	0.36	83	83	70	2.87	2	74	0.045	97	97	91.6	0.17	0.80	15.45	117.4	173.5	168.8	55.8	173.2	109	71	70	70	0.011	1.001	6.661	783
1936	309.251	308.071		0.16	0.16	1.30	1.03	0.36	83	83	70	2.86	2	75	0.040	104	104	91.6	0.05	0.82	11.69	117.2	173.4	168.7	55.8	173.0	110	71	70	70	0.011	1.001	6.824	801
1937	309.411	308.230		0.16	0.16	1.31	1.03	0.36	83	83	70	2.86	2	77	0.042	102	101	91.5	0.05	0.86	15.50	117.1	173.4	168.7	55.8	173.0	127	71	70	70	0.026	1.001	7.150	839
1938	309.570	308.388		0.16	0.16	1.31	1.03	0.36	83	83	70	2.85	2	74	0.041	102	102	92.1	-0.58	0.80	14.27	117.1	173.2	168.5	55.8	172.8	141	71	70	70	0.017	1.001	6.659	780
1939	309.731	308.547		0.16	0.16	1.31	1.03	0.36	83	83	70	2.86	2	74	0.043	101	100	91.5	0.59	0.86	15.46	117.0	173.1	168.5	55.8	172.8	133	71	70	70	0.015	1.001	7.157	838
1940	309.890	308.706		0.16	0.16	1.30	1.03	0.36	83	83	70	2.86	2	74	0.040	103	103	92.0	-0.48	0.84	14.13	116.8	173.0	168.3	55.8	172.6	129	71	70	70	0.014	1.001	6.994	818
1941	310.050	308.864		0.16	0.16	1.30	1.03	0.36	83	83	70	2.86	2	74	0.042	101	100	91.8	0.24	0.80	14.20	116.6	172.7	168.2	55.8	172.4	125	71	70	70	0.014	1.001	6.677	779
1942	310.210	309.024		0.16	0.16	1.30	1.03	0.36	83	83	70	2.85	2	73	0.046	97	97	91.7	0.04	0.86	14.17	116.6	172.7	168.0	55.8	172.4	123	71	70	70	0.013	1.001	7.136	833
1943	310.371	309.182		0.16	0.16	1.30	1.03	0.36	82	83	70	2.85	2	74	0.044	100	98	91.6	0.13	0.84	15.46	116.5	172.5	167.8	55.8	172.3	121	71	70	70	0.013	1.001	6.996	816
1944	310.531	309.341		0.16	0.16	1.30	1.03	0.36	83	83	70	2.85	2	74	0.042	101	101	91.1	0.50	0.78	15.55	116.2	172.4	167.8	55.9	172.1	119	71	70	70	0.012	1.001	6.507	757
1945	310.691	309.500		0.16	0.16	1.31	1.02	0.36	82	83	70	2.87	2	74	0.043	100	100	91.6	-0.48	0.81	15.45	116.3	172.3	167.7	55.7	172.0	118	71	70	70	0.012	1.001	6.760	787
1946	310.851	309.659		0.16	0.16	1.30	1.03	0.36	83	83	70	2.85	2	74	0.043	100	100	91.4	0.21	0.82	15.45	116.0	172.2	167.6	55.8	171.8	117	71	70	70	0.011	1.001	6.820	792
1947	311.011	309.818		0.16	0.16	1.30	1.03	0.36	83	83	70	2.87	2	73	0.044	99	99	91.4	-0.05	0.84	15.47	116.0	172.1	167.4	55.8	171.7	116	71	70	70	0.012	1.001	6.985	811
1948	311.171	309.977		0.16	0.16	1.30	1.03	0.36	83	83	70	2.85	2	74	0.039	105	105	91.4	0.00	0.80	15.42	115.7	171.9	167.3	55.8	171.5	115	70	70	70	0.011	1.001	6.657	771
1949	311.330	310.136		0.16	0.16	1.30	1.03	0.36	83	83	70	2.87	2	74	0.042	101	101	91.4	0.00	0.76	15.50	115.7	171.8	167.4	55.8	171.4	114	71	70	70	0.011	1.001	6.338	734
1950	311.490	310.295		0.16	0.16	1.30	1.03	0.36	83	83	70	2.86	2	74	0.045	98	98	91.9	-0.47	0.86	15.49	115.5	171.7	167.1	55.8	171.3	113	71	70	70	0.011	1.001	7.149	827
1951	311.650	310.453		0.16	0.16	1.30	1.03	0.36	83	83	70	2.85	2	74	0.044	99	98	91.9	-0.04	0.88	15.50	115.3	171.5	166.9	55.8	171.1	113	71	70	70	0.011	1.001	7.313	845
1952	311.810	310.612		0.16	0.16	1.31	1.03	0.36	83	83	70	2.86	2	74	0.043	100	100	91.8	0.11	0.84	15.37	115.2	171.4	166.7	55.8	171.0	112	70	70	70	0.011	1.001	6.984	806
1953	311.970	310.772		0.16	0.16	1.31	1.02	0.36	83	83	70	2.86	2	74	0.045	98	98	91.9	-0.05	0.80	14.21	115.1	171.3	166.6	55.8	170.9	111	70	70	70	0.010	1.001	6.664	768
1954	312.130	310.930		0.16	0.16	1.30	1.03	0.36	82	83	70	2.86	2	74	0.045	98	97	91.6	0.24	0.82	14.41	114.9	171.0	166.4	55.8	170.7	112	70	70	70	0.011	1.001	6.826	785
1955	312.289	311.089		0.16	0.16	1.30	1.03	0.36	83	83	70	2.87	2	74	0.043	100	100	91.7	-0.08	0.78	15.43	114.9	171.0	166.4	55.8	170.7	111	70	70	70	0.010	1.001	6.506	748
1956	312.449	311.248		0.16	0.16	1.31	1.03	0.36	83	83	70	2.86	2	73	0.043	100	100	91.6	0.07	0.80	15.50	114.8	170.8	166.3	55.8	170.5	110	70	70	70	0.010	1.001	6.669	766
1957	312.610	311.407		0.16	0.16	1.31	1.04	0.36	83	83	70	2.85	2	74	0.040	104	103	91.5	0.09	0.88	15.46	114.7	170.7	166.1	55.7	170.4	110	70	70	70	0.010	1.001	7.321	840
1958	312.770	311.566		0.16	0.16	1.30	1.03	0.36	83	83	70	2.86	2	73	0.043	100	100	92.1	-0.53	0.86	15.49	114.4	170.5	165.9	55.8	170.2	109	70	70	70	0.010	1.001	7.151	819
1959	312.930	311.725		0.16	0.16	1.30	1.03	0.36	83	83	70	2.86	2	74	0.041	103	102	91.8	0.33	0.84	15.49	114.5	170.4	166.2	55.7	170.2	109	70	70	70	0.010	1.001	6.991	801
1960	313.090	311.883		0.16	0.16	1.30	1.03	0.36	82	83	70	2.86	2	74	0.046	97	96	91.2	0.51	0.82	15.57	114.3	170.3	165.7	55.7	170.0	109	70	70	70	0.010	1.001	6.830	782
1961	313.250	312.043		0.16	0.16	1.31	1.03	0.36	83	83	70	2.86	2	74	0.043	100	100	91.0	0.20	0.78	15.55	114.1	170.2	165.6	55.7	169.9	108	70	70	70	0.010	1.001	6.499	743
1962	313.410	312.201		0.16	0.16	1.30	1.03	0.36	82	83	70	2.85	2	74	0.040	104	103	91.8	-0.72	0.84	15.46	114.0	170.0	165.5	55.8	169.8	108	70	70	70	0.010	1.001	6.992	798
1963	313.570	312.360		0.16	0.16	1.30	1.03	0.36	82	83	70	2.87	2	74	0.045	98	98	91.5	0.24	0.86	15.51	113.8	169.9	165.3	55.8	169.6	107	70	70	70	0.010	1.001	7.154	815
1964	313.730	312.519		0.16	0.16	1.31	1.03	0.36	83	83	70	2.86	2	73	0.043	100	100	92.0	-0.48	0.90	15.47	113.7	169.8	165.3	55.8	169.4	107	70	70	70	0.010	1.001	7.473	850
1965	313.890	312.678		0.16	0.16	1.30	1.03	0.36	83	83	70	2.86	2	74	0.044	99	99	91.1	0.88	0.78	15.43	113.6	169.6	165.1	55.8	169.3	106	70	70	70	0.009	1.001	6.499	739
1966	314.049	312.838		0.16	0.16	1.30	1.03	0.36	83	83	70	2.85	2	73	0.041	102	103	91.7	-0.60	0.82	15.50	113.4	169.5	165.0	55.8	169.2	107	70	70	70	0.009	1.001	6.822	775
1967	314.209	312.996		0.16	0.16	1.30	1.03	0.36	83	83	70	2.87	2	76	0.045	98	97	91.6	0.09	0.84	15.45	113.2	169.3	164.8	55.8	169.1	107	70	70	70	0.009	1.001	6.986	792
1968	314.369	313.154		0.16	0.16	1.30	1.03	0.36	83	83	70	2.87	2	76	0.043	100	99	91.5	0.12	0.86	15.48	113.1	169.2	164.7	55.8	168.9	131	70	70	70	0.026	1.001	7.149	809
1969	314.529	313.314		0.16	0.16	1.30	1.03	0.36	82	83	70	2.86	2	74	0.043	100	100	91.9	-0.34	0.80	15.46	113.0	169.2	164.6	55.8	168.8	137	70	70	70	0.014	1.001	6.660	753
1970	314.689	313.472		0.16	0.16	1.31	1.03	0.36	83	83	70	2.87	2	74	0.039	105	104	91.4	0.41	0.84	15.47	112.9	169.0	164.5	55.8	168.7	129	70	70	70	0.013	1.001	6.988	790
1971	314.849	313.631		0.16	0.16	1.31	1.03	0.36	83	83	70	2.87	2	74	0.042	101	101	91.6	-0.19	0.80	15.59	112.8	168.9	164.3	55.8	168.6	124	70	70	70	0.012	1.001	6.663	753
1972	315.010	313.790		0.16	0.16	1.31	1.03	0.36	83	83	70	2.87	2	73	0.047	96	95	91.3	0.29	0.88	15.53	112.7	168.8	164.3	55.8	168.5	120	70	70	70	0.011	1.001	7.308	825
1973	315.170	313.949		0.16	0.16	1.31	1.03	0.36	83	83	70	2.87	2	73	0.047	96	95	91.6	-0.29	0.82	15.57	112.5	168.7	164.2	55.9	168.4	118	70	70	70	0.012	1.001	6.824	768
1974	315.330	314.109		0.16	0.16	1.31	1.03	0.36	82	83	70	2.87	2	73	0.042	101	102	91.7	-0.06	0.82	15.51	112.4	168.5	164.0	55.8	168.2	116	70	70	70	0.011	1.001	6.819	768

Elapsed Time	Particulate Sampling Data																	Fuel Weight, lb		Flow, gpm		Temperature Data, oF													
	Gas Meter Cubic Feet (1)	Gas Meter Cubic Feet (2)	Gas Meter Cubic Feet (amb)	Sample Rate, cfm (1)	Sample Rate, cfm (2)	Orifice dH (1)	Orifice dH (2)	Orifice dH (amb)	Meter oF (1)	Meter oF (2)	Meter oF (amb)	Meter Vac. In. Hg. (1)	Meter Vac. In. Hg. (2)	Dilution Tunnel Temp.	Dilution Tunnel dP	Pro. Rate (%) (1)	Pro. Rate (%) (2)	Scale Reading	Weight Change	Load Side Liquid Flow Rate	Boiler Side Liquid Flow Rate (optional)	Thermopile ΔT	Boiler to Heat Exch. Temp.	Heat Exch to Boiler Temp.	Inlet Load Temp.	Outlet Load Temp.	Stack	Filter (1)	Filter (2)	Ambient		Specific Heat of Inlet Water (BTU/lb-°F)	Mass Flow Rate of Inlet Water (lb/min)	Heat Output, Btu
1975	315.490	314.267		0.16	0.16	1.30	1.03	0.36	82	83	70	2.86	2	73	0.041	103	101	91.6	0.11	0.82	15.56	112.3	168.4	163.9	55.8	168.1	114	70	70	70	0.011	1.001	6.820	767
1976	315.650	314.426		0.16	0.16	1.30	1.03	0.36	82	83	70	2.86	2	73	0.045	98	97	92.0	-0.38	0.78	15.52	112.2	168.2	163.8	55.8	167.9	113	70	70	70	0.010	1.001	6.514	731
1977	315.810	314.585		0.16	0.16	1.30	1.03	0.36	82	83	70	2.87	2	73	0.043	100	100	91.3	0.70	0.84	15.48	112.0	168.2	163.7	55.8	167.8	113	70	70	70	0.011	1.001	6.989	784
1978	315.970	314.744		0.16	0.16	1.30	1.03	0.36	82	83	70	2.85	2	73	0.044	99	99	91.7	-0.44	0.86	15.58	111.9	168.0	163.5	55.8	167.7	111	70	70	70	0.010	1.001	7.163	803
1979	316.129	314.903		0.16	0.16	1.30	1.03	0.36	82	83	70	2.86	2	73	0.042	101	101	91.8	-0.09	0.82	15.59	111.8	167.9	163.4	55.8	167.6	111	70	70	70	0.011	1.001	6.823	764
1980	316.290	315.062		0.16	0.16	1.30	1.03	0.36	82	83	70	2.86	2	73	0.044	100	99	91.6	0.17	0.89	15.47	111.6	167.7	163.2	55.8	167.4	110	70	70	70	0.010	1.001	7.458	834
1981	316.449	315.221		0.16	0.16	1.31	1.03	0.36	83	83	70	2.86	2	73	0.044	98	99	91.4	0.19	0.84	15.43	111.5	167.6	163.1	55.8	167.2	109	70	70	70	0.010	1.001	6.983	779
1982	316.609	315.380		0.16	0.16	1.30	1.02	0.36	82	83	70	2.85	2	73	0.044	99	99	91.6	-0.17	0.82	15.51	111.4	167.4	162.9	55.8	167.2	109	70	70	70	0.010	1.001	6.842	763
1983	316.769	315.538		0.16	0.16	1.31	1.03	0.36	82	83	70	2.86	2	73	0.043	100	99	91.6	0.04	0.80	15.48	111.2	167.3	162.8	55.8	167.0	107	70	70	70	0.009	1.001	6.660	742
1984	316.929	315.697		0.16	0.16	1.31	1.03	0.36	82	83	70	2.87	2	73	0.040	104	103	91.5	0.10	0.80	15.52	111.1	167.2	162.7	55.8	166.9	108	70	70	70	0.009	1.001	6.660	741
1985	317.089	315.857		0.16	0.16	1.30	1.03	0.36	82	83	70	2.86	2	73	0.046	97	97	91.6	-0.12	0.87	15.48	111.0	167.1	162.5	55.8	166.7	108	70	70	70	0.010	1.001	7.274	808
1986	317.249	316.015		0.16	0.16	1.30	1.03	0.36	82	83	70	2.86	2	73	0.042	101	100	91.7	-0.08	0.86	15.48	110.9	167.0	162.5	55.7	166.7	107	70	70	70	0.009	1.001	7.148	794
1987	317.410	316.174		0.16	0.16	1.30	1.03	0.36	82	83	70	2.87	2	73	0.044	100	99	91.5	0.19	0.76	15.51	110.8	166.8	162.3	55.7	166.5	106	70	70	70	0.009	1.001	6.338	703
1988	317.570	316.333		0.16	0.16	1.31	1.03	0.36	82	83	70	2.86	2	73	0.045	98	97	92.0	-0.49	0.78	15.55	110.7	166.7	162.2	55.7	166.4	106	70	70	70	0.009	1.001	6.499	720
1989	317.730	316.492		0.16	0.16	1.31	1.03	0.36	82	83	70	2.86	2	73	0.043	100	100	91.6	0.33	0.86	15.50	110.6	166.5	162.1	55.7	166.2	106	70	70	70	0.009	1.001	7.149	791
1990	317.890	316.652		0.16	0.16	1.31	1.02	0.36	82	83	70	2.87	2	73	0.044	99	99	91.5	0.16	0.82	15.55	110.3	166.4	161.9	55.7	166.1	105	70	70	70	0.009	1.001	6.828	754
1991	318.050	316.810		0.16	0.16	1.31	1.03	0.36	82	83	70	2.86	2	73	0.042	101	100	91.8	-0.34	0.80	15.53	110.2	166.3	161.8	55.7	166.0	105	70	70	70	0.009	1.001	6.664	735
1992	318.210	316.969		0.16	0.16	1.30	1.03	0.36	82	83	70	2.85	2	73	0.043	100	100	91.9	-0.06	0.84	15.45	110.1	166.1	161.7	55.7	165.9	106	70	70	70	0.009	1.001	6.991	771
1993	318.370	317.128		0.16	0.16	1.30	1.03	0.36	82	83	70	2.86	2	73	0.042	101	101	91.6	0.30	0.82	15.52	110.0	166.0	161.6	55.7	165.7	105	70	70	70	0.009	1.001	6.828	752
1994	318.530	317.287		0.16	0.16	1.30	1.03	0.36	82	83	70	2.85	2	73	0.041	103	102	91.9	-0.30	0.84	15.49	109.9	165.9	161.5	55.7	165.6	104	70	70	70	0.009	1.001	6.992	769
1995	318.690	317.445		0.16	0.16	1.30	1.03	0.36	82	83	70	2.86	2	74	0.044	99	98	91.5	0.34	0.84	15.50	109.7	165.8	161.4	55.7	165.5	104	70	70	70	0.008	1.001	6.990	768
1996	318.850	317.605		0.16	0.16	1.30	1.02	0.36	82	83	70	2.85	2	73	0.042	101	102	92.0	-0.45	0.86	15.42	109.6	165.6	161.1	55.7	165.3	104	70	70	70	0.008	1.001	7.149	784
1997	319.009	317.763		0.16	0.16	1.31	1.03	0.36	82	83	70	2.85	2	74	0.041	102	102	91.5	0.46	0.82	15.47	109.5	165.5	161.1	55.7	165.2	104	70	70	70	0.008	1.001	6.824	748
1998	319.169	317.923		0.16	0.16	1.30	1.02	0.36	82	83	70	2.86	2	77	0.044	99	100	91.3	0.24	0.84	15.37	109.3	165.4	161.0	55.7	165.1	104	70	70	70	0.008	1.001	6.986	765
1999	319.329	318.081		0.16	0.16	1.30	1.03	0.36	82	83	70	2.87	2	75	0.043	100	99	91.9	-0.63	0.86	15.47	109.2	165.3	160.9	55.7	164.9	127	70	70	70	0.024	1.001	7.147	781
2000	319.489	318.240		0.16	0.16	1.30	1.03	0.36	82	83	70	2.85	2	74	0.046	97	96	91.6	0.30	0.84	15.55	109.0	165.1	160.7	55.8	164.8	133	70	70	70	0.012	1.001	6.985	762
2001	319.649	318.399		0.16	0.16	1.30	1.03	0.36	82	83	70	2.85	2	74	0.044	99	99	91.4	0.21	0.76	15.43	108.9	165.0	160.6	55.8	164.7	124	70	70	70	0.011	1.001	6.336	691
2002	319.810	318.558		0.16	0.16	1.30	1.03	0.36	82	83	70	2.85	2	73	0.042	102	101	91.7	-0.29	0.76	15.60	108.8	164.8	160.5	55.8	164.6	119	70	70	70	0.011	1.001	6.336	690
2003	319.970	318.717		0.16	0.16	1.30	1.03	0.36	82	83	70	2.85	2	73	0.044	99	99	91.6	0.05	0.80	15.53	108.7	164.7	160.4	55.8	164.5	116	70	70	70	0.010	1.001	6.666	725
2004	320.130	318.876		0.16	0.16	1.30	1.03	0.36	82	83	70	2.86	2	73	0.043	100	100	91.6	0.02	0.86	15.48	108.5	164.6	160.2	55.8	164.3	113	70	70	70	0.009	1.001	7.145	776
2005	320.290	319.034		0.16	0.16	1.30	1.03	0.36	82	83	70	2.86	2	73	0.045	98	97	91.3	0.35	0.88	15.51	108.4	164.5	160.1	55.8	164.2	112	70	70	70	0.010	1.001	7.298	792
2006	320.450	319.194		0.16	0.16	1.30	1.03	0.36	82	83	70	2.85	2	73	0.043	100	100	91.7	-0.45	0.86	15.54	108.3	164.3	160.0	55.8	164.1	111	70	70	70	0.009	1.001	7.149	775
2007	320.610	319.352		0.16	0.16	1.29	1.03	0.36	82	83	70	2.86	2	73	0.041	103	101	91.6	0.17	0.78	15.51	108.0	164.2	159.9	55.9	163.9	110	70	70	70	0.009	1.001	6.502	703
2008	320.769	319.511		0.16	0.16	1.30	1.03	0.36	82	83	70	2.87	2	73	0.043	100	100	91.3	0.24	0.84	15.49	107.9	164.1	159.7	55.8	163.8	109	70	70	70	0.009	1.001	6.974	754
2009	320.929	319.671		0.16	0.16	1.30	1.03	0.36	82	83	70	2.86	2	73	0.044	99	99	91.4	-0.09	0.88	15.48	107.9	164.0	159.6	55.8	163.7	108	70	70	70	0.009	1.001	7.309	789
2010	321.089	319.829		0.16	0.16	1.30	1.03	0.36	82	83	70	2.87	2	73	0.041	103	101	91.4	-0.02	0.84	15.44	107.7	163.8	159.4	55.8	163.5	108	70	70	70	0.009	1.001	6.990	754
2011	321.249	319.988		0.16	0.16	1.30	1.03	0.36	82	83	70	2.86	2	73	0.047	96	95	91.5	-0.12	0.78	15.48	107.7	163.7	159.4	55.8	163.5	107	70	70	70	0.009	1.001	6.471	698
2012	321.409	320.147		0.16	0.16	1.30	1.03	0.36	82	83	70	2.85	2	73	0.043	100	100	91.5	0.03	0.80	15.51	107.5	163.6	159.2	55.8	163.2	107	70	70	70	0.009	1.001	6.662	717
2013	321.569	320.305		0.16	0.16	1.30	1.03	0.36	82	83	70	2.86	2	73	0.043	100	99	91.7	-0.15	0.80	15.50	107.4	163.5	159.0	55.8	163.1	106	70	70	70	0.009	1.001	6.666	717
2014	321.729	320.465		0.16	0.16	1.30	1.03	0.36	82	83	70	2.86	2	73	0.044	99	99	91.5	0.13	0.81	15.59	107.3	163.4	158.9	55.7	163.0	106	70	70	70	0.009	1.001	6.785	729
2015	321.889	320.624		0.16	0.16	1.31	1.03	0.36	82	83	70	2.85	2	73	0.043	100	100	91.6	-0.06	0.74	15.52	107.1	163.2	158.8	55.8	162.8	107	70	70	70	0.009	1.001	6.177	662
2016	322.049	320.782		0.16	0.16	1.30	1.03	0.36	82	83	70	2.86	2	73	0.042	101	100	91.6	0.02	0.86	15.56	107.0	163.0	158.6	55.7	162.7	106	70	70	70	0.008	1.001	7.152	766
2017	322.209	320.942		0.16	0.16	1.31	1.03	0.36	82	83	70	2.86	2	73	0.044	99	99	91.7	-0.16	0.82	15.50	106.9	162.9	158.6	55.7	162.6	105	70	70	70	0.009	1.001	6.822	730
2018	322.370	321.100		0.16	0.16	1.29	1.03	0.36	82	83	70	2.86	2	74	0.045	99	97	91.7	0.04	0.82	15.47	106.8	162.8	158.6	55.7	162.5	105	70	70	70	0.009	1.001	6.838	731
2019	322.529	321.259		0.16	0.16	1.30	1.03	0.36	82	83	70	2.85	2	73	0.045	97	97	91.6	0.08	0.82	15.44	106.5	162.6	158.2	55.8	162.3	105	70	70	70	0.008	1.001	6.829	728
2020	322.689	321.419		0.16	0.16	1.30	1.03	0.36	82	83	70	2.86	2	74	0.043	100	100	91.8	-0.20	0.74	15.42	106.4	162.5	158.2	55.8	162.2	104	70	70	70	0.008	1.001	6.176	658
2021	322.849	321.577		0.16	0.16	1.29	1.03	0.36	82	83	70	2.86	2	73	0.045	98	97	91.5	0.36	0.84	15.40	106.3	162.4	158.1	55.8	162.1	104	70	70	70	0.008	1.001	6.991	744
2022	323.009	321.737		0.16	0.16	1.30	1.03	0.36	82	83	70	2.86	2	73	0.045	98	98	91.7	-0.26	0.82	15.43	106.2	162.3	157.9	55.7	162.0	104	70	70	70	0.008	1.001	6.825	726
2023	323.169	321.895		0.16	0.16	1.30	1.03	0.36	82	83	70	2.86	2	73	0.044	99	98	91.5	0.27	0.80	15.48	106.1	162.1	157.8	55.7	161.8	104	70	70	70	0.008	1.001	6.665	708
2024	323.329	322.054		0.16	0.16	1.30	1.03	0.36	82	83	70	2.86	2	73	0.045	98	97	91.1	0.32	0.84	15.48	105.9	162.0	157.7	55.8	161.7	104	70	70	70	0.008	1.001	6.989	741
2025	323.488	322.214		0.16	0.16	1.31	1.03	0.36	82	83	70	2.86	2	73	0.044	98	99	92.2	-1.09	0.82	15.54	105.7	161.9	157.5	55.8	161.5	104	70	70	70	0.008	1.001	6.828	723
2026	323.648	322.372		0.16	0.16	1.30	1.03	0.36	82	83	70	2.86	2	73	0.044	99	98	91.8	0.43	0.84	15.56	105.6	161.8	157.5	55.8	161.5	103	70	70	70	0.008	1.001	6.988	739
2027	323.808	322.531		0.16	0.16	1.30	1.03	0.36	82	83	70	2.86	2	73	0.041	103	102	91.7	0.14	0.90	15.52	105.5	161.6	157.4	55.8	161.3	103	70	70	70	0.008	1.001	7.480	790
2028	323.968	322.690		0.16	0.16	1.30	1.03	0.36	82	83	70	2.86	2	73	0.045	98	97	91.8	-0.12	0.82	15.50	105.4	161.5	157.2	55.8	161.2	103	70	70	70	0.008	1.001	6.831	721
2029	324.128	322.848		0.16	0.16	1.30	1.02	0.36	82	83	70	2.86	2	77	0.044	99	98	91.5	0.31	0.82	15.54	105.2	161.3	157.1	55.8	161.1	102	70	70	70	0.007	1.001	6.826	719
2030	324.288	323.008		0.16	0.16	1.30	1.03	0.36	82	83	70	2.85	2	75	0.044	99	99	91.6	-0.13	0.82	15.50	105.2	161.3	157.1	55.8	161.0	126	70	70	70	0.023	1.001	6.826	719
2031	324.449	323.166		0.16	0.16	1.30	1.03	0.36	82	83	70	2.85	2	73	0.044	100	98	91.5	0.14	0.74	15.47	105.1	161.2	157.0	55.8	160.9	129	70	70	70	0.010	1.001	6.179	650
2032	324.609	323.325		0.16	0.16	1.30	1.03	0.36	82	83	70	2.86	2	73	0.039	105	105	91.1	0.35	0.78	15.40	105.0	161.1	156.9	55.7	160.7	121	70	70	70	0.010	1.001	6.505	684
2033	324.768	323.485		0.16	0.16	1.30	1.03	0.36	82	83	70	2.85	2	73	0.043	100	100	91.5	-0.36	0.82	15.58	104.9	160.9	156.8	55.7	160.6	116	70	70	70	0.010	1.001	6.829	717
2034	324.928	323.643		0.16	0.16	1.30	1.03	0.36	82	83	70	2.85	2	73	0.044	99	98	91.3	0.20	0.86	15.48	104.7	160.7	156.6	55.8	160.5	112	70	70	70	0.009	1.001	7.147	749
2035	325.088	323.802		0.16	0.16	1.30	1.03	0.36	82	83	70	2.85	2	73	0.042	101	101	91.4	-0.10	0.86	15.46	104.6	160.6	156.5	55.8	160.3	111	70	70	70	0.009	1.001	7.148	748
2036	325.248	323.961		0.16	0.16	1.30	1.03	0.36	82	83	69	2.86	2	74	0.042	102	101	91.6	-0.26	0.90	15.50	104.4	160.5	156.3	55.8	160.2	109	70	70	69	0.008	1.001	7.466	780

Elapsed Time	Particulate Sampling Data																Fuel Weight, lb		Flow, gpm		Temperature Data, oF												
	Gas Meter Cubic Feet (1)	Gas Meter Cubic Feet (2)	Gas Meter Cubic Feet (amb)	Sample Rate, cfm (1)	Sample Rate, cfm (2)	Orifice dH (1)	Orifice dH (2)	Orifice dH (amb)	Meter oF (1)	Meter oF (2)	Meter oF (amb)	Meter Vac. In. Hg. (1)	Meter Vac. In. Hg. (2)	Dilution Tunnel Temp.	Dilution Tunnel dP	Pro. Rate (%) (1)	Pro. Rate (%) (2)	Scale Reading	Weight Change	Load Side Liquid Flow Rate	Boiler Side Liquid Flow Rate (optional)	Thermopile ΔT	Boiler to Heat Exch. Temp.	Heat Exch to Boiler Temp.	Inlet Load Temp.	Outlet Load Temp.	Stack	Filter (1)	Filter (2)	Ambient		Specific Heat of Inlet Water (BTU/lb-°F)	Mass Flow Rate of Inlet Water (lb/min)	Heat Output, Btu
2037	325.408	324.120		0.16	0.16	1.29	1.03	0.36	82	83	70	2.86	2	74	0.042	102	101	91.5	0.11	0.88	15.41	104.3	160.4	156.2	55.8	160.1	108	70	70	70	0.009	1.001	7.310	763
2038	325.568	324.279		0.16	0.16	1.30	1.03	0.36	82	83	70	2.86	2	73	0.044	99	99	91.3	0.23	0.78	15.55	104.2	160.3	156.1	55.8	160.0	106	70	70	70	0.009	1.001	6.493	677
2039	325.727	324.438		0.16	0.16	1.30	1.02	0.36	82	83	70	2.85	2	73	0.044	98	99	91.5	-0.25	0.82	15.45	104.1	160.1	155.9	55.7	159.8	106	70	70	70	0.009	1.001	6.823	711
2040	325.887	324.597		0.16	0.16	1.30	1.03	0.36	82	83	70	2.86	2	74	0.040	104	103	91.9	-0.32	0.76	15.51	104.0	160.0	155.8	55.7	159.7	106	70	70	70	0.008	1.001	6.343	660
2041	326.047	324.757		0.16	0.16	1.30	1.03	0.36	82	83	70	2.84	2	73	0.040	104	104	91.1	0.75	0.82	15.55	103.8	159.8	155.6	55.7	159.6	106	70	70	70	0.008	1.001	6.829	710
2042	326.207	324.915		0.16	0.16	1.30	1.03	0.36	82	83	70	2.85	2	73	0.043	100	99	91.0	0.14	0.82	15.43	103.7	159.7	155.6	55.8	159.4	105	70	70	70	0.008	1.001	6.835	709
2043	326.367	325.074		0.16	0.16	1.30	1.03	0.36	82	83	70	2.86	2	77	0.041	103	102	90.7	0.27	0.83	15.46	103.5	159.6	155.4	55.8	159.3	104	70	70	70	0.008	1.001	6.878	713
2044	326.527	325.233		0.16	0.16	1.31	1.03	0.36	82	83	70	2.87	2	82	0.043	101	101	90.2	0.52	0.82	15.58	103.3	159.5	155.3	55.8	159.2	124	70	70	70	0.024	1.001	6.865	710
2045	326.687	325.391		0.16	0.16	1.30	1.03	0.36	82	83	70	2.87	2	85	0.043	101	100	89.8	0.42	0.80	15.47	103.5	159.6	155.4	55.8	159.3	157	70	70	70	0.025	1.001	6.649	689
2046	326.847	325.551		0.16	0.16	1.31	1.05	0.36	82	83	70	2.86	2	88	0.046	98	98	88.5	1.25	0.74	15.50	103.4	159.6	155.5	55.9	159.3	173	70	70	70	0.031	1.001	6.185	640
2047	327.007	325.712		0.16	0.16	1.31	1.06	0.36	82	83	70	2.87	2	91	0.044	101	101	87.9	0.60	0.82	15.61	103.6	159.9	155.6	55.8	159.4	187	71	70	70	0.031	1.001	6.821	708
2048	327.166	325.872		0.16	0.16	1.31	1.06	0.36	82	83	70	2.86	2	95	0.044	100	101	85.8	2.05	0.84	15.58	104.1	160.5	156.2	55.8	160.0	207	71	70	70	0.035	1.001	6.986	728
2049	327.326	326.032		0.16	0.16	1.31	1.06	0.36	82	83	69	2.86	2	98	0.040	106	106	85.3	0.51	0.76	15.51	104.8	161.2	156.9	55.8	160.6	226	71	71	69	0.036	1.001	6.340	665
2050	327.485	326.192		0.16	0.16	1.30	1.06	0.36	82	83	70	2.86	2	101	0.040	106	107	84.7	0.63	0.84	15.54	105.7	162.1	157.7	55.9	161.5	241	72	71	70	0.037	1.001	6.984	739
2051	327.645	326.352		0.16	0.16	1.30	1.05	0.36	82	83	70	2.86	2	102	0.040	107	107	83.7	1.04	0.86	15.49	106.7	163.1	158.7	55.9	162.5	252	72	71	70	0.041	1.001	7.149	764
2052	327.804	326.511		0.16	0.16	1.31	1.05	0.36	82	83	70	2.86	2	104	0.043	102	103	83.0	0.70	0.84	15.61	107.6	164.1	159.6	55.9	163.5	257	72	71	70	0.043	1.001	6.984	753
2053	327.963	326.672		0.16	0.16	1.31	1.05	0.36	82	83	70	2.88	2	105	0.045	100	102	82.0	0.98	0.78	15.57	108.7	165.2	160.7	55.9	164.6	261	73	72	70	0.041	1.001	6.497	707
2054	328.123	326.831		0.16	0.16	1.31	1.05	0.36	82	83	70	2.88	2	106	0.040	107	107	80.9	1.06	0.80	15.56	110.0	166.4	161.8	55.8	165.8	265	73	72	70	0.045	1.001	6.659	733
2055	328.282	326.990		0.16	0.16	1.30	1.05	0.36	82	83	69	2.88	2	108	0.041	105	105	79.9	1.05	0.86	15.48	111.1	167.6	163.0	55.8	166.9	268	73	72	69	0.049	1.001	7.150	795
2056	328.442	327.150		0.16	0.16	1.31	1.05	0.36	82	83	69	2.88	2	109	0.042	105	105	78.8	1.04	0.86	15.56	112.3	168.8	164.2	55.8	168.2	273	73	72	69	0.044	1.001	7.151	804
2057	328.601	327.309		0.16	0.16	1.31	1.05	0.36	82	83	70	2.89	2	110	0.041	105	106	78.2	0.59	0.86	15.54	113.7	170.3	165.6	55.8	169.5	276	74	73	70	0.047	1.001	7.147	814
2058	328.760	327.468		0.16	0.16	1.30	1.05	0.36	82	83	70	2.89	2	112	0.041	106	106	77.3	0.90	0.84	15.50	114.7	171.3	166.6	55.9	170.7	278	74	73	70	0.048	1.001	6.982	802
2059	328.919	327.627		0.16	0.16	1.30	1.04	0.36	82	83	70	2.89	2	113	0.042	105	105	75.7	1.63	0.82	14.76	116.0	172.7	168.0	56.0	172.0	280	74	73	70	0.046	1.001	6.817	792
2060	329.077	327.786		0.16	0.16	1.30	1.04	0.36	82	83	70	2.90	2	115	0.043	103	104	74.6	1.06	0.82	14.24	117.2	174.1	169.4	56.1	173.4	283	75	74	70	0.044	1.001	6.808	799
2061	329.236	327.945		0.16	0.16	1.29	1.04	0.36	82	83	70	2.91	2	118	0.043	104	104	73.6	1.08	0.78	14.20	118.6	175.6	170.8	56.3	174.8	286	75	74	70	0.047	1.001	6.482	769
2062	329.395	328.103		0.16	0.16	1.30	1.04	0.36	82	83	70	2.90	2	119	0.041	106	106	71.7	1.88	0.86	10.72	119.8	177.0	172.0	56.5	176.3	292	76	75	70	0.050	1.001	7.136	856
2063	329.553	328.261		0.16	0.16	1.29	1.03	0.36	82	83	71	2.92	2	119	0.040	107	107	70.8	0.85	0.84	12.90	121.0	178.5	173.4	56.7	177.7	294	77	76	71	0.048	1.001	6.966	844
2064	329.712	328.419		0.16	0.16	1.29	1.03	0.36	82	83	71	2.91	2	121	0.040	108	107	69.7	1.15	0.84	11.53	122.2	179.9	174.9	56.9	179.2	294	77	76	71	0.046	1.001	6.965	853
2065	329.870	328.577		0.16	0.16	1.29	1.03	0.36	82	83	71	2.92	2	120	0.041	106	106	68.9	0.76	0.86	10.33	123.6	181.4	176.2	57.0	180.6	296	78	76	71	0.048	1.001	7.128	882
2066	330.028	328.735		0.16	0.16	1.28	1.02	0.36	82	83	72	2.93	2	121	0.042	105	105	67.3	1.65	0.80	3.94	124.9	182.7	177.6	57.1	182.0	297	78	77	72	0.047	1.001	6.638	830
2067	330.186	328.892		0.16	0.16	1.28	1.02	0.36	82	83	72	2.92	2	105	0.039	107	106	67.2	0.09	0.80	5.98	125.7	183.3	178.1	57.1	182.8	298	79	77	72	0.045	1.001	6.647	836
2068	330.344	329.050		0.16	0.16	1.28	1.02	0.36	82	83	72	2.91	2	97	0.039	106	106	66.6	0.54	0.86	3.38	126.1	183.8	178.6	57.2	183.3	279	79	76	72	0.036	1.001	7.138	901
2069	330.503	329.208		0.16	0.16	1.28	1.02	0.36	82	83	72	2.90	2	95	0.042	103	102	66.6	0.05	0.82	1.67	126.2	184.0	178.8	57.3	183.5	253	78	75	72	0.034	1.001	6.807	860
2070	330.661	329.365		0.16	0.16	1.28	1.02	0.36	82	83	73	2.90	2	93	0.044	100	99	66.0	0.56	0.82	1.25	126.5	184.5	179.3	57.5	183.9	239	78	76	73	0.033	1.001	6.809	862
2071	330.820	329.524		0.16	0.16	1.29	1.02	0.36	83	83	73	2.90	2	91	0.045	99	99	66.0	0.01	0.78	5.16	127.0	184.8	179.7	57.4	184.4	229	77	75	73	0.032	1.001	6.475	823
2072	330.979	329.682		0.16	0.16	1.28	1.02	0.36	83	83	73	2.91	2	89	0.043	101	101	65.3	0.75	0.74	2.80	126.9	185.0	179.9	57.7	184.6	223	77	75	73	0.031	1.001	6.167	783
2073	331.139	329.841		0.16	0.16	1.31	1.03	0.36	83	83	73	2.93	2	89	0.039	107	106	65.5	-0.23	0.80	1.61	127.1	185.1	179.9	57.6	184.6	219	77	75	73	0.033	1.001	6.643	845
2074	331.300	330.000		0.16	0.16	1.31	1.03	0.36	83	83	73	2.93	2	88	0.042	103	102	65.5	0.02	0.86	3.92	127.0	185.3	180.4	57.7	184.8	215	77	75	73	0.031	1.001	7.160	911
2075	331.460	330.159		0.16	0.16	1.31	1.03	0.36	83	83	74	2.92	2	88	0.045	99	99	65.2	0.26	0.84	3.57	127.3	185.4	180.3	57.6	185.0	212	77	75	74	0.031	1.001	7.001	892
2076	331.621	330.319		0.16	0.16	1.31	1.07	0.36	83	83	74	2.91	2	88	0.043	102	102	65.1	0.15	0.84	2.77	127.3	185.4	180.4	57.8	185.0	209	77	76	74	0.031	1.001	6.964	887
2077	331.781	330.479		0.16	0.16	1.31	1.06	0.36	83	83	74	2.90	2	87	0.043	101	102	64.8	0.26	0.85	3.92	127.3	185.5	180.4	57.8	185.2	206	77	76	74	0.030	1.001	7.118	907
2078	331.942	330.640		0.16	0.16	1.31	1.06	0.36	83	84	74	2.90	2	87	0.044	101	101	64.7	0.08	0.81	1.10	127.4	185.6	180.7	57.9	185.2	204	77	76	74	0.029	1.001	6.792	866
2079	332.103	330.801		0.16	0.16	1.31	1.05	0.36	83	84	75	2.91	2	87	0.043	102	102	65.1	-0.41	0.81	1.36	127.4	185.6	180.7	57.9	185.3	203	77	76	75	0.031	1.001	6.790	866
2080	332.263	330.962		0.16	0.16	1.31	1.05	0.36	83	84	75	2.91	2	87	0.043	101	102	64.6	0.53	0.76	0.77	127.3	185.7	180.8	57.9	185.3	201	77	76	75	0.033	1.001	6.301	803
2081	332.424	331.122		0.16	0.16	1.30	1.05	0.36	83	84	75	2.92	2	86	0.041	104	104	64.5	0.07	0.76	0.87	127.3	185.7	181.0	58.0	185.3	199	77	76	75	0.035	1.001	6.299	803
2082	332.584	331.283		0.16	0.16	1.31	1.05	0.36	83	84	75	2.90	2	87	0.040	105	106	64.3	0.20	0.81	3.31	127.4	185.8	180.8	58.0	185.4	197	78	76	75	0.036	1.001	6.785	866
2083	332.745	331.444		0.16	0.16	1.31	1.05	0.36	84	84	75	2.91	2	87	0.044	101	101	64.3	0.06	0.81	2.63	127.3	185.7	180.7	58.1	185.4	195	77	76	75	0.036	1.001	6.781	864
2084	332.906	331.605		0.16	0.16	1.31	1.05	0.36	84	84	75	2.92	2	87	0.043	102	102	64.5	-0.24	0.81	3.31	127.2	185.7	180.7	58.1	185.3	192	78	76	75	0.036	1.001	6.781	863
2085	333.067	331.765		0.16	0.16	1.31	1.05	0.36	84	84	76	2.91	2	87	0.046	98	98	64.2	0.31	0.77	0.80	127.0	185.7	180.9	58.4	185.3	190	78	76	76	0.036	1.001	6.453	820
2086	333.227	331.927		0.16	0.16	1.31	1.05	0.36	84	84	76	2.90	2	88	0.044	100	102	64.1	0.13	0.79	3.15	127.1	185.6	180.6	58.1	185.3	188	78	77	76	0.035	1.001	6.613	842
2087	333.388	332.087		0.16	0.16	1.31	1.05	0.36	84	85	76	2.90	2	88	0.041	104	104	64.5	-0.45	0.81	1.18	127.2	185.7	180.6	58.2	185.3	187	78	77	76	0.035	1.001	6.778	863
2088	333.548	332.247		0.16	0.16	1.31	1.05	0.36	84	85	76	2.91	2	88	0.044	100	100	64.5	0.03	0.79	2.04	127.0	185.6	180.6	58.2	185.3	185	78	77	76	0.035	1.001	6.614	841
2089	333.709	332.408		0.16	0.16	1.31	1.05	0.36	84	85	76	2.90	2	87	0.047	97	97	63.2	1.29	0.81	0.89	126.9	185.6	180.6	58.3	185.2	183	78	77	76	0.034	1.001	6.774	861
2090	333.870	332.569		0.16	0.16	1.31	1.05	0.36	84	85	76	2.91	2	87	0.042	103	103	63.6	-0.35	0.83	1.25	126.8	185.5	180.5	58.3	185.2	181	78	77	76	0.033	1.001	6.933	880
2091	334.030	332.730		0.16	0.16	1.31	1.05	0.36	84	85	77	2.90	2	87	0.047	97	97	63.4	0.13	0.83	1.03	126.8	185.5	180.5	58.3	185.1	180	78	77	77	0.033	1.001	6.934	880
2092	334.191	332.890		0.16	0.16	1.31	1.05	0.36	85	85	77	2.92	2	88	0.038	108	108	63.9	-0.43	0.79	1.90	126.6	185.5	180.4	58.5	185.1	178	78	77	77	0.033	1.001	6.618	839
2093	334.352	333.051		0.16	0.16	1.31	1.05	0.36	85	85	77	2.90	2	88	0.043	102	102	63.4	0.42	0.81	2.99	126.7	185.4	180.4	58.4	185.1	177	78	77	77	0.032	1.001	6.769	859
2094	334.513	333.211		0.16	0.16	1.31	1.05	0.36	85	85	77	2.91	2	88	0.041	104	104	63.8	-0.36	0.81	2.93	126.6	185.4	180.3	58.4	185.0	174	78	77	77	0.032	1.001	6.775	859
2095	334.674	333.372		0.16	0.16	1.31	1.05	0.36	85	85	77	2.91	2	88	0.045	99	100	63.3	0.44	0.81	1.78	126.5	185.3	180.3	58.4	184.9	174	78	77	77	0.031	1.001	6.772	858
2096	334.834	333.534		0.16	0.16	1.30	1.05	0.36	85	85	77	2.91	2	88	0.043	101	103	62.6	0.77	0.79	2.63	126.5	185.3	180.2	58.4	184.9	174	78	77	77	0.031	1.001	6.617	838
2097	334.995	333.694		0.16	0.16	1.30	1.05	0.36	85	86	77	2.92	2	89	0.043	102	101	64.2	-1.57	0.83	1.17	126.5	185.2	180.2	58.4	184.8	173	78	77	77	0.030	1.001	6.921	876
2098	335.156	333.854		0.16	0.16	1.30	1.05	0.36	85	86	77	2.90	2	89	0.045	100	99	62.4	1.71	0.75	2.37	126.5	185.3	180.3	58.3	184.8	172	78	77	77	0.029	1.001	6.283	796

Elapsed Time	Particulate Sampling Data																	Fuel Weight, lb		Flow, gpm		Temperature Data, oF													
	Gas Meter Cubic Feet (1)	Gas Meter Cubic Feet (2)	Gas Meter Cubic Feet (amb)	Sample Rate, cfm (1)	Sample Rate, cfm (2)	Orifice dH (1)	Orifice dH (2)	Orifice dH (amb)	Meter oF (1)	Meter oF (2)	Meter oF (amb)	Meter Vac. In. Hg. (1)	Meter Vac. In. Hg. (2)	Dilution Tunnel Temp.	Dilution Tunnel dP	Pro. Rate (%) (1)	Pro. Rate (%) (2)	Scale Reading	Weight Change	Load Side Liquid Flow Rate	Boiler Side Liquid Flow Rate (optional)	Thermopile ΔT	Boiler to Heat Exch. Temp.	Heat Exch to Boiler Temp.	Inlet Load Temp.	Outlet Load Temp.	Stack	Filter (1)	Filter (2)	Ambient		Specific Heat of Inlet Water (BTU/lb-°F)	Mass Flow Rate of Inlet Water (lb/min)	Heat Output, Btu
2099	335.317	334.015		0.16	0.16	1.31	1.05	0.36	85	86	77	2.90	2	88	0.042	103	103	63.1	-0.62	0.81	2.45	126.4	185.1	180.1	58.3	184.7	170	78	77	77	0.029	1.001	6.791	859
2100	335.477	334.176		0.16	0.16	1.30	1.05	0.36	85	86	78	2.91	2	89	0.040	105	106	63.5	-0.45	0.85	2.37	126.3	185.1	179.9	58.3	184.7	169	78	77	78	0.028	1.001	7.079	895
2101	335.638	334.336		0.16	0.16	1.30	1.05	0.36	86	86	78	2.91	2	89	0.042	103	102	63.1	0.39	0.84	1.42	126.2	184.9	179.9	58.3	184.5	170	78	77	78	0.027	1.001	7.018	887
2102	335.799	334.496		0.16	0.16	1.30	1.05	0.36	86	86	78	2.90	2	89	0.043	102	101	62.9	0.25	0.81	1.35	126.2	184.9	179.8	58.3	184.5	168	79	78	78	0.027	1.001	6.769	855
2103	335.959	334.658		0.16	0.16	1.30	1.05	0.36	86	86	78	2.90	2	89	0.045	99	100	62.9	-0.07	0.80	0.86	126.1	184.8	179.8	58.3	184.4	168	79	78	78	0.027	1.001	6.671	842
2104	336.120	334.818		0.16	0.16	1.30	1.05	0.36	86	86	78	2.91	2	89	0.043	102	101	63.2	-0.25	0.81	1.41	126.0	184.7	179.7	58.4	184.4	166	79	78	78	0.027	1.001	6.712	847
2105	336.281	334.978		0.16	0.16	1.30	1.05	0.36	86	86	78	2.90	2	89	0.042	103	102	63.3	-0.15	0.81	0.74	125.8	184.6	179.6	58.4	184.3	165	79	78	78	0.026	1.001	6.735	849
2106	336.441	335.140		0.16	0.16	1.30	1.05	0.36	86	87	78	2.92	2	89	0.042	102	104	62.9	0.39	0.79	3.63	125.8	184.6	179.6	58.5	184.3	167	79	78	78	0.025	1.001	6.606	832
2107	336.602	335.300		0.16	0.16	1.30	1.04	0.36	86	87	78	2.92	2	89	0.044	100	100	63.0	-0.02	0.83	1.25	125.7	184.5	179.6	58.5	184.1	165	79	78	78	0.025	1.001	6.926	871
2108	336.762	335.460		0.16	0.16	1.30	1.05	0.36	86	87	79	2.91	2	90	0.045	99	99	62.5	0.44	0.85	2.52	125.8	184.5	179.5	58.3	184.1	165	79	78	79	0.024	1.001	7.081	892
2109	336.923	335.621		0.16	0.16	1.30	1.05	0.36	86	87	79	2.91	2	89	0.043	102	102	62.9	-0.42	0.71	1.78	126.1	184.4	179.5	58.0	184.1	161	79	78	79	0.024	1.001	5.953	751
2110	337.084	335.782		0.16	0.16	1.30	1.05	0.36	86	87	79	2.91	2	88	0.044	100	100	63.3	-0.37	0.81	2.63	126.2	184.4	179.4	57.7	184.0	164	79	78	79	0.023	1.001	6.759	854
2111	337.244	335.942		0.16	0.16	1.30	1.05	0.36	87	87	79	2.91	2	87	0.045	98	99	63.5	-0.15	0.79	3.41	126.2	184.3	179.2	57.6	183.8	162	79	78	79	0.024	1.001	6.600	834
2112	337.405	336.102		0.16	0.16	1.30	1.05	0.36	87	87	79	2.92	2	87	0.043	101	101	63.0	0.46	0.83	0.98	126.2	184.2	179.2	57.6	183.8	161	79	78	79	0.024	1.001	6.928	875
2113	337.565	336.263		0.16	0.16	1.30	1.05	0.36	87	87	79	2.91	2	87	0.043	101	102	63.1	-0.09	0.85	3.91	126.0	184.1	179.0	57.6	183.6	160	79	78	79	0.024	1.001	7.087	894
2114	337.726	336.423		0.16	0.16	1.31	1.05	0.36	87	87	79	2.91	2	86	0.042	102	102	61.4	1.74	0.81	1.42	126.0	184.0	179.0	57.6	183.7	158	79	78	79	0.023	1.001	6.767	854
2115	337.887	336.584		0.16	0.16	1.31	1.05	0.36	87	87	79	2.91	2	86	0.045	99	99	61.2	0.18	0.83	1.35	126.0	183.9	179.1	57.5	183.5	160	79	78	79	0.022	1.001	6.929	874
2116	338.047	336.745		0.16	0.16	1.31	1.05	0.36	87	88	79	2.91	2	86	0.045	98	99	61.4	-0.27	0.81	1.99	126.0	183.9	178.8	57.5	183.5	157	79	78	79	0.023	1.001	6.766	854
2117	338.208	336.905		0.16	0.16	1.30	1.05	0.36	87	88	79	2.91	2	85	0.044	100	99	61.7	-0.28	0.79	3.16	125.9	183.7	178.7	57.5	183.4	155	79	78	79	0.022	1.001	6.606	833
2118	338.369	337.066		0.16	0.16	1.30	1.05	0.36	87	88	79	2.91	2	85	0.042	102	102	61.9	-0.22	0.81	0.93	125.8	183.7	178.6	57.5	183.3	155	79	78	79	0.022	1.001	6.768	853
2119	338.530	337.227		0.16	0.16	1.31	1.05	0.36	87	88	79	2.91	2	85	0.043	101	101	61.9	0.06	0.79	1.66	125.7	183.6	178.8	57.5	183.2	154	79	78	79	0.022	1.001	6.608	832
2120	338.691	337.388		0.16	0.16	1.31	1.05	0.36	87	88	79	2.91	2	85	0.044	100	100	61.5	0.38	0.81	5.18	125.8	183.6	178.5	57.4	183.2	156	79	78	79	0.021	1.001	6.765	852
2121	338.852	337.548		0.16	0.16	1.30	1.05	0.36	87	88	79	2.92	2	85	0.043	101	101	61.5	0.01	0.79	4.80	125.8	183.5	178.5	57.4	183.1	154	79	78	79	0.021	1.001	6.610	832
2122	339.013	337.709		0.16	0.16	1.31	1.05	0.36	88	88	79	2.91	2	85	0.045	99	99	61.8	-0.30	0.79	2.37	125.7	183.4	178.3	57.4	183.0	154	79	78	79	0.020	1.001	6.607	831
2123	339.174	337.870		0.16	0.16	1.31	1.05	0.36	88	88	79	2.91	2	84	0.045	99	99	61.7	0.08	0.77	3.92	125.6	183.3	178.2	57.3	182.9	152	79	78	79	0.020	1.001	6.451	811
2124	339.335	338.030		0.16	0.16	1.30	1.05	0.36	88	88	79	2.92	2	84	0.043	101	100	61.7	0.03	0.83	5.17	125.6	183.2	178.1	57.3	182.8	151	79	78	79	0.020	1.001	6.934	872
2125	339.496	338.191		0.16	0.16	1.31	1.05	0.36	88	88	79	2.92	2	84	0.040	104	105	61.6	0.09	0.81	2.39	125.6	183.1	178.0	57.1	182.8	149	79	78	79	0.020	1.001	6.773	852
2126	339.657	338.352		0.16	0.16	1.30	1.04	0.36	88	88	79	2.92	2	83	0.043	101	101	62.2	-0.58	0.85	6.49	125.6	183.0	178.0	57.0	182.7	152	79	78	79	0.020	1.001	7.102	893
2127	339.818	338.512		0.16	0.16	1.31	1.05	0.36	88	89	79	2.91	2	83	0.040	104	104	61.5	0.63	0.83	3.64	125.7	182.9	177.9	56.9	182.6	150	79	78	79	0.019	1.001	6.898	868
2128	339.979	338.673		0.16	0.16	1.31	1.05	0.36	88	88	78	2.93	2	82	0.042	102	102	61.2	0.36	0.79	3.42	125.8	182.9	177.8	56.7	182.5	150	79	78	78	0.019	1.001	6.621	834
2129	340.140	338.835		0.16	0.16	1.31	1.05	0.36	88	89	78	2.91	2	81	0.044	99	100	61.8	-0.58	0.81	5.20	125.7	182.8	177.8	56.6	182.3	148	79	78	78	0.019	1.001	6.738	848
2130	340.301	338.996		0.16	0.16	1.30	1.05	0.36	88	89	78	2.91	2	81	0.042	102	102	61.5	0.27	0.81	3.92	125.9	182.6	177.6	56.4	182.3	147	79	78	78	0.020	1.001	6.789	855
2131	340.461	339.156		0.16	0.16	1.31	1.05	0.36	88	89	78	2.91	2	80	0.043	100	100	61.8	-0.28	0.80	3.93	125.8	182.5	177.5	56.3	182.1	147	78	78	78	0.019	1.001	6.670	840
2132	340.623	339.317		0.16	0.16	1.30	1.05	0.36	88	89	78	2.91	2	80	0.045	99	98	61.9	-0.09	0.85	5.18	125.9	182.4	177.5	56.2	182.1	146	78	78	78	0.018	1.001	7.118	897
2133	340.784	339.479		0.16	0.16	1.30	1.05	0.36	88	89	77	2.92	2	79	0.042	102	102	62.0	-0.13	0.82	4.89	126.0	182.4	177.4	56.0	182.0	143	78	78	77	0.019	1.001	6.806	858
2134	340.945	339.640		0.16	0.16	1.30	1.05	0.36	88	89	77	2.92	2	79	0.041	103	103	62.0	0.05	0.80	5.97	126.0	182.2	177.2	55.9	181.9	144	78	78	77	0.018	1.001	6.641	838
2135	341.106	339.801		0.16	0.16	1.30	1.05	0.36	88	89	77	2.92	2	78	0.044	99	99	62.3	-0.29	0.80	7.19	126.0	182.1	177.1	55.7	181.8	145	78	78	77	0.018	1.001	6.635	837
2136	341.267	339.962		0.16	0.16	1.30	1.05	0.36	88	89	76	2.91	2	78	0.045	98	98	61.5	0.75	0.80	6.10	126.1	182.0	177.1	55.6	181.7	143	78	78	76	0.018	1.001	6.640	838
2137	341.429	340.124		0.16	0.16	1.30	1.04	0.36	88	89	76	2.93	2	90	0.045	100	100	60.6	0.89	0.82	7.79	126.0	181.9	176.9	55.5	181.5	141	77	77	76	0.017	1.001	6.801	858
2138	341.589	340.284		0.16	0.16	1.30	1.05	0.36	88	89	76	2.92	2	80	0.040	103	104	61.6	-1.01	0.84	7.79	126.0	181.8	176.8	55.4	181.4	162	78	78	76	0.039	1.001	6.969	879
2139	341.750	340.446		0.16	0.16	1.31	1.06	0.36	88	89	75	2.90	2	77	0.043	100	101	61.2	0.43	0.84	5.18	126.1	181.7	176.8	55.3	181.4	158	78	78	75	0.024	1.001	6.971	880
2140	341.912	340.608		0.16	0.16	1.31	1.06	0.36	88	89	75	2.91	2	77	0.040	104	105	61.5	-0.29	0.82	7.20	126.1	181.6	176.8	55.2	181.4	153	77	77	75	0.021	1.001	6.806	860
2141	342.074	340.769		0.16	0.16	1.31	1.04	0.36	88	89	75	2.90	2	76	0.042	102	101	61.1	0.32	0.89	7.78	126.1	181.6	176.7	55.1	181.2	149	77	77	75	0.020	1.001	7.452	941
2142	342.233	340.929		0.16	0.16	1.28	1.04	0.36	88	89	75	2.88	2	76	0.043	99	100	61.1	0.02	0.80	3.90	126.0	181.4	176.4	55.1	181.1	147	76	76	75	0.019	1.001	6.648	839
2143	342.393	341.090		0.16	0.16	1.29	1.04	0.36	88	89	75	2.87	2	76	0.046	96	97	60.8	0.34	0.84	9.12	126.0	181.3	176.4	55.0	181.0	143	76	76	75	0.018	1.001	6.971	879
2144	342.554	341.251		0.16	0.16	1.29	1.05	0.36	88	89	74	2.87	2	76	0.043	100	100	61.1	-0.34	0.78	8.29	125.8	181.2	176.2	55.0	180.8	143	76	76	74	0.017	1.001	6.482	817
2145	342.714	341.411		0.16	0.16	1.29	1.04	0.36	88	89	74	2.88	2	75	0.041	102	102	61.0	0.11	0.86	6.40	125.8	181.1	176.2	54.9	180.7	141	76	76	74	0.017	1.001	7.130	898
2146	342.874	341.571		0.16	0.16	1.29	1.05	0.36	88	89	74	2.87	2	75	0.043	99	99	61.3	-0.32	0.78	6.65	125.7	181.0	176.1	54.9	180.6	140	75	76	74	0.017	1.001	6.483	816
2147	343.034	341.733		0.16	0.16	1.29	1.05	0.36	88	89	74	2.88	2	75	0.041	102	103	60.5	0.83	0.78	5.22	125.7	180.9	175.9	54.9	180.6	137	75	76	74	0.016	1.001	6.482	816
2148	343.194	341.893		0.16	0.16	1.29	1.04	0.36	88	89	74	2.87	2	75	0.045	97	97	60.8	-0.33	0.78	8.07	125.6	180.8	175.7	54.8	180.4	137	75	75	74	0.016	1.001	6.488	816
2149	343.354	342.053		0.16	0.16	1.29	1.05	0.36	88	89	74	2.87	2	75	0.044	98	98	61.1	-0.30	0.76	10.33	125.5	180.7	175.6	54.8	180.3	136	75	75	74	0.016	1.001	6.330	796
2150	343.515	342.215		0.16	0.16	1.29	1.05	0.36	88	89	74	2.87	2	75	0.044	99	100	60.6	0.57	0.82	10.35	125.5	180.6	175.7	54.7	180.2	134	75	75	74	0.015	1.001	6.816	856
2151	343.675	342.375		0.16	0.16	1.29	1.03	0.36	88	89	74	2.88	2	75	0.045	97	97	60.6	-0.07	0.82	11.60	125.4	180.5	175.4	54.7	180.1	134	74	75	74	0.015	1.001	6.814	856
2152	343.836	342.535		0.16	0.16	1.29	1.04	0.36	88	89	73	2.87	2	74	0.043	100	99	61.1	-0.45	0.84	9.05	125.3	180.3	175.3	54.6	179.9	133	74	75	73	0.015	1.001	6.976	875
2153	343.996	342.696		0.16	0.16	1.29	1.05	0.36	88	88	73	2.86	2	74	0.042	100	101	60.8	0.25	0.84	7.78	125.2	180.2	175.2	54.6	179.8	131	74	75	73	0.015	1.001	6.982	875
2154	344.157	342.857		0.16	0.16	1.29	1.04	0.36	88	88	73	2.87	2	74	0.046	97	97	61.5	-0.67	0.86	11.63	125.1	180.1	175.1	54.6	179.7	130	74	74	73	0.014	1.001	7.134	893
2155	344.317	343.018		0.16	0.16	1.29	1.04	0.36	88	88	73	2.87	2	74	0.040	103	104	60.6	0.90	0.82	9.36	125.0	180.0	175.1	54.6	179.6	131	74	74	73	0.014	1.001	6.811	853
2156	344.477	343.178		0.16	0.16	1.29	1.04	0.36	87	88	73	2.88	2	74	0.044	98	98	61.2	-0.58	0.86	10.75	124.9	179.9	175.0	54.6	179.5	129	73	74	73	0.014	1.001	7.142	893
2157	344.638	343.340		0.16	0.16	1.28	1.04	0.36	87	88	73	2.87	2	74	0.044	99	100	61.5	-0.26	0.76	9.03	124.7	179.7	174.9	54.7	179.4	128	73	74	73	0.013	1.001	6.327	790
2158	344.798	343.500		0.16	0.16	1.29	1.04	0.36	87	88	73	2.86	2	74	0.042	101	101	61.1	0.34	0.88	6.86	124.8	179.7	174.7	54.5	179.3	128	73	74	73	0.013	1.001	7.300	912
2159	344.958	343.661		0.16	0.16	1.28	1.05	0.36	87	88	73	2.86	2	74	0.044	98	99	61.5	-0.42	0.79	9.06	124.7	179.5	174.5	54.5	179.1	129	73	74	73	0.013	1.001	6.548	817
2160	345.118	343.822		0.16	0.16	1.29	1.05	0.36	87	88	73	2.87	2	73	0.043	99	100	61.1	0.47	0.82	8.36	124.5	179.4	174.4	54.4	179.0	128	73	74	73	0.013	1.001	6.855	855

Elapsed Time	Particulate Sampling Data																	Fuel Weight, lb		Flow, gpm		Temperature Data, oF													
	Gas Meter Cubic Feet (1)	Gas Meter Cubic Feet (2)	Gas Meter Cubic Feet (amb)	Sample Rate, cfm (1)	Sample Rate, cfm (2)	Orifice dH (1)	Orifice dH (2)	Orifice dH (amb)	Meter oF (1)	Meter oF (2)	Meter oF (amb)	Meter Vac. In. Hg. (1)	Meter Vac. In. Hg. (2)	Dilution Tunnel Temp.	Dilution Tunnel dP	Pro. Rate (%) (1)	Pro. Rate (%) (2)	Scale Reading	Weight Change	Load Side Liquid Flow Rate	Boiler Side Liquid Flow Rate (optional)	Thermopile ΔT	Boiler to Heat Exch. Temp.	Heat Exch to Boiler Temp.	Inlet Load Temp.	Outlet Load Temp.	Stack	Filter (1)	Filter (2)	Ambient		Specific Heat of Inlet Water (BTU/lb-°F)	Mass Flow Rate of Inlet Water (lb/min)	Heat Output, Btu
2161	345.278	343.983		0.16	0.16	1.29	1.05	0.36	87	88	72	2.86	2	73	0.045	97	98	61.3	-0.18	0.80	7.76	124.5	179.3	174.3	54.4	178.9	126	73	73	72	0.013	1.001	6.653	829
2162	345.439	344.143		0.16	0.16	1.29	1.05	0.36	87	88	72	2.87	2	73	0.045	98	97	61.2	0.04	0.87	7.86	124.4	179.1	174.2	54.4	178.8	123	72	73	72	0.013	1.001	7.288	908
2163	345.599	344.304		0.16	0.16	1.30	1.05	0.36	87	88	72	2.87	2	73	0.045	97	98	61.6	-0.34	0.78	11.15	124.3	179.1	174.1	54.4	178.7	125	72	73	72	0.012	1.001	6.490	807
2164	345.759	344.465		0.16	0.16	1.29	1.05	0.36	87	88	72	2.86	2	73	0.043	99	100	61.1	0.45	0.79	11.91	124.2	178.9	174.0	54.4	178.6	124	72	73	72	0.012	1.001	6.596	820
2165	345.920	344.626		0.16	0.16	1.29	1.05	0.36	87	87	72	2.87	2	75	0.041	103	103	61.7	-0.63	0.79	9.03	124.0	178.8	174.0	54.5	178.5	124	72	73	72	0.012	1.001	6.547	813
2166	346.080	344.786		0.16	0.16	1.30	1.04	0.36	87	87	72	2.86	2	75	0.042	101	101	61.1	0.58	0.80	9.54	123.6	178.6	173.8	54.7	178.3	123	72	73	72	0.012	1.001	6.654	824
2167	346.240	344.948		0.16	0.16	1.29	1.05	0.36	87	87	71	2.87	2	74	0.046	96	98	60.9	0.29	0.84	10.30	123.2	178.5	173.6	54.9	178.1	122	72	73	71	0.011	1.001	6.967	859
2168	346.401	345.108		0.16	0.16	1.29	1.03	0.36	87	87	71	2.89	2	83	0.043	101	101	61.5	-0.68	0.76	10.33	123.0	178.4	173.5	55.1	178.1	122	72	73	71	0.012	1.001	6.332	780
2169	346.561	345.268		0.16	0.16	1.29	1.05	0.36	87	87	71	2.88	2	76	0.046	96	97	61.0	0.51	0.86	11.38	122.8	178.2	173.4	55.2	177.9	145	72	73	71	0.035	1.001	7.136	877
2170	346.721	345.429		0.16	0.16	1.30	1.04	0.36	87	87	71	2.87	2	74	0.041	102	103	61.0	0.01	0.84	9.34	122.6	178.3	173.4	55.3	177.9	148	72	72	71	0.017	1.001	6.974	856
2171	346.882	345.590		0.16	0.16	1.29	1.04	0.36	86	87	71	2.86	2	74	0.044	99	99	61.1	-0.13	0.80	9.54	122.4	178.1	173.3	55.4	177.8	141	72	72	71	0.016	1.001	6.647	815
2172	347.043	345.751		0.16	0.16	1.29	1.05	0.36	86	87	71	2.87	2	74	0.043	100	100	61.2	-0.07	0.86	12.97	122.2	178.0	173.1	55.5	177.7	136	72	72	71	0.016	1.001	7.131	872
2173	347.203	345.911		0.16	0.16	1.29	1.05	0.36	86	87	71	2.87	2	74	0.044	98	99	60.6	0.57	0.84	12.88	122.0	177.9	173.2	55.5	177.6	133	72	72	71	0.014	1.001	6.972	852
2174	347.363	346.073		0.16	0.16	1.29	1.05	0.36	86	87	72	2.87	2	75	0.042	101	102	60.8	-0.15	0.76	11.58	121.8	177.8	173.3	55.6	177.4	131	72	72	72	0.014	1.001	6.347	774
2175	347.523	346.233		0.16	0.16	1.30	1.05	0.36	86	87	71	2.87	2	75	0.044	99	99	61.0	-0.23	0.78	11.73	121.7	177.7	172.8	55.7	177.4	128	72	72	71	0.016	1.001	6.485	790
2176	347.684	346.394		0.16	0.16	1.29	1.05	0.36	86	87	72	2.87	2	75	0.043	100	100	60.4	0.58	0.84	9.99	121.4	177.5	172.6	55.8	177.2	127	72	72	72	0.013	1.001	6.970	847
2177	347.844	346.556		0.16	0.16	1.29	1.05	0.36	86	86	72	2.87	2	75	0.043	100	101	60.7	-0.24	0.84	14.20	121.3	177.4	172.6	55.8	177.1	126	72	72	72	0.012	1.001	6.971	846
2178	348.004	346.716		0.16	0.16	1.29	1.05	0.36	86	86	72	2.87	2	75	0.045	97	98	60.7	0.02	0.80	11.61	121.1	177.3	172.5	55.9	176.9	124	72	72	72	0.015	1.001	6.648	806
2179	348.165	346.877		0.16	0.16	1.29	1.05	0.36	86	86	72	2.87	2	75	0.041	103	103	61.3	-0.60	0.80	12.85	120.9	177.1	172.3	56.0	176.8	123	72	72	72	0.014	1.001	6.651	805
2180	348.325	347.037		0.16	0.16	1.29	1.05	0.36	86	86	72	2.87	2	75	0.044	99	99	60.6	0.65	0.80	12.73	120.7	176.9	172.2	56.0	176.7	121	72	72	72	0.014	1.001	6.645	803
2181	348.485	347.198		0.16	0.16	1.29	1.05	0.36	86	86	72	2.86	2	75	0.043	100	101	60.7	-0.15	0.78	14.23	120.5	176.9	172.2	56.0	176.6	121	72	72	72	0.014	1.001	6.484	782
2182	348.645	347.359		0.16	0.16	1.29	1.05	0.36	86	86	72	2.86	2	76	0.046	96	97	61.0	-0.23	0.76	12.92	120.4	176.8	172.0	56.1	176.4	121	72	72	72	0.013	1.001	6.322	762
2183	348.805	347.520		0.16	0.16	1.29	1.04	0.36	86	86	72	2.87	2	76	0.045	98	98	60.6	0.35	0.80	13.23	120.2	176.6	171.9	56.1	176.3	120	72	72	72	0.013	1.001	6.645	800
2184	348.965	347.681		0.16	0.16	1.30	1.05	0.36	86	86	72	2.86	2	76	0.043	100	101	61.1	-0.44	0.76	15.50	120.1	176.6	171.9	56.1	176.2	119	72	72	72	0.012	1.001	6.321	760
2185	349.126	347.841		0.16	0.16	1.30	1.04	0.36	86	86	72	2.86	2	76	0.043	100	100	61.4	-0.34	0.80	13.43	120.0	176.4	171.6	56.1	176.1	117	72	72	72	0.013	1.001	6.646	798
2186	349.286	348.002		0.16	0.16	1.30	1.05	0.36	86	86	72	2.87	2	76	0.044	99	100	60.7	0.74	0.80	15.51	119.7	176.3	171.5	56.2	175.9	116	72	72	72	0.013	1.001	6.639	796
2187	349.446	348.163		0.16	0.16	1.29	1.05	0.36	86	86	72	2.86	2	76	0.046	96	97	60.6	0.12	0.82	14.27	119.7	176.2	171.4	56.2	175.8	116	72	72	72	0.012	1.001	6.801	815
2188	349.607	348.324		0.16	0.16	1.30	1.04	0.36	86	86	72	2.87	2	76	0.042	102	102	61.1	-0.59	0.80	11.91	119.5	176.0	171.2	56.2	175.7	117	72	72	72	0.012	1.001	6.658	796
2189	349.767	348.484		0.16	0.16	1.29	1.05	0.36	86	86	72	2.86	2	76	0.045	98	98	60.7	0.46	0.82	12.45	119.4	175.9	171.1	56.2	175.6	115	72	72	72	0.012	1.001	6.813	815
2190	349.928	348.644		0.16	0.16	1.29	1.05	0.36	86	86	72	2.86	2	76	0.043	100	100	61.2	-0.55	0.80	12.99	119.2	175.8	171.0	56.2	175.4	115	72	72	72	0.012	1.001	6.632	792
2191	350.088	348.806		0.16	0.16	1.29	1.04	0.36	86	86	72	2.87	2	76	0.046	96	98	61.0	0.23	0.84	10.88	119.1	175.7	170.9	56.2	175.3	115	72	72	72	0.012	1.001	6.973	832
2192	350.248	348.966		0.16	0.16	1.30	1.05	0.36	85	86	72	2.86	2	76	0.044	99	99	61.0	-0.02	0.80	12.94	119.0	175.6	170.9	56.3	175.2	114	72	72	72	0.012	1.001	6.647	792
2193	350.408	349.127		0.16	0.16	1.29	1.04	0.36	85	86	72	2.86	2	76	0.043	100	101	61.1	-0.10	0.82	14.76	118.8	175.4	170.6	56.2	175.0	114	72	72	72	0.012	1.001	6.810	810
2194	350.568	349.288		0.16	0.16	1.29	1.04	0.36	85	86	72	2.86	2	76	0.039	105	106	60.8	0.36	0.80	14.17	118.7	175.3	170.6	56.3	175.0	113	72	72	72	0.012	1.001	6.650	791
2195	350.728	349.448		0.16	0.16	1.29	1.04	0.36	85	86	72	2.86	2	76	0.045	98	98	60.9	-0.13	0.81	11.58	118.6	175.2	170.4	56.3	174.8	113	72	72	72	0.011	1.001	6.759	802
2196	350.888	349.608		0.16	0.16	1.29	1.05	0.36	85	86	72	2.86	2	76	0.044	99	99	61.0	-0.08	0.80	15.45	118.5	175.0	170.2	56.3	174.7	112	72	72	72	0.011	1.001	6.647	789
2197	351.048	349.770		0.16	0.16	1.29	1.04	0.36	85	86	72	2.86	2	76	0.041	102	104	61.0	0.02	0.82	14.17	118.4	174.9	170.1	56.2	174.6	112	72	72	72	0.010	1.001	6.808	807
2198	351.208	349.930		0.16	0.16	1.29	1.04	0.36	85	86	72	2.86	2	76	0.043	100	100	60.7	0.24	0.83	15.49	118.2	174.8	170.0	56.2	174.4	112	72	72	72	0.012	1.001	6.943	822
2199	351.368	350.090		0.16	0.16	1.29	1.04	0.36	85	86	72	2.88	2	82	0.044	99	99	61.0	-0.28	0.86	14.24	118.1	174.6	169.9	56.3	174.3	111	72	72	72	0.011	1.001	7.134	843
2200	351.528	350.251		0.16	0.16	1.30	1.05	0.36	85	86	72	2.86	2	78	0.041	103	103	60.8	0.24	0.80	14.18	118.0	174.5	169.8	56.3	174.2	139	72	72	72	0.028	1.001	6.647	785
2201	351.688	350.412		0.16	0.16	1.29	1.04	0.36	85	86	72	2.87	2	77	0.042	101	102	60.6	0.19	0.80	15.45	117.9	174.5	169.7	56.3	174.1	140	72	72	72	0.015	1.001	6.648	784
2202	351.848	350.572		0.16	0.16	1.29	1.05	0.36	85	86	72	2.86	2	76	0.044	99	99	61.2	-0.67	0.76	14.11	117.7	174.3	169.6	56.3	174.0	132	72	72	72	0.015	1.001	6.323	745
2203	352.008	350.733		0.16	0.16	1.29	1.04	0.36	85	86	72	2.87	2	76	0.041	102	103	60.3	0.98	0.88	14.21	117.6	174.2	169.5	56.3	173.9	127	72	72	72	0.014	1.001	7.296	859
2204	352.168	350.894		0.16	0.16	1.29	1.04	0.36	85	86	72	2.86	2	76	0.043	100	101	61.3	-1.06	0.76	15.55	117.5	174.1	169.4	56.2	173.7	123	72	72	72	0.014	1.001	6.321	743
2205	352.329	351.054		0.16	0.16	1.29	1.04	0.36	85	86	72	2.85	2	76	0.043	101	100	60.7	0.63	0.76	15.42	117.3	173.9	169.2	56.3	173.6	122	72	72	72	0.013	1.001	6.323	743
2206	352.489	351.215		0.16	0.16	1.29	1.04	0.36	85	85	72	2.86	2	76	0.045	98	99	61.1	-0.45	0.84	15.58	117.2	173.8	169.1	56.3	173.5	120	72	72	72	0.013	1.001	6.972	818
2207	352.649	351.376		0.16	0.16	1.29	1.04	0.36	85	85	72	2.87	2	76	0.044	99	100	60.6	0.52	0.78	12.88	117.0	173.6	168.9	56.3	173.3	118	72	72	72	0.012	1.001	6.487	760
2208	352.809	351.536		0.16	0.16	1.29	1.04	0.36	85	85	72	2.87	2	76	0.046	97	97	60.7	-0.07	0.82	15.41	116.9	173.5	168.8	56.3	173.2	117	72	72	72	0.011	1.001	6.808	797
2209	352.969	351.697		0.16	0.16	1.28	1.05	0.36	85	85	72	2.85	2	76	0.040	104	105	61.7	-0.99	0.78	12.90	116.9	173.4	168.8	56.3	173.1	117	72	72	72	0.012	1.001	6.483	758
2210	353.129	351.857		0.16	0.16	1.28	1.05	0.36	85	85	72	2.86	2	76	0.044	99	99	60.9	0.78	0.84	15.49	116.7	173.3	168.7	56.3	172.9	116	72	72	72	0.012	1.001	6.971	814
2211	353.289	352.018		0.16	0.16	1.28	1.04	0.36	85	85	72	2.86	2	76	0.041	102	103	60.9	0.00	0.80	15.58	116.6	173.2	168.6	56.3	172.9	116	72	72	72	0.012	1.001	6.649	776
2212	353.449	352.179		0.16	0.16	1.29	1.05	0.36	85	85	72	2.87	2	76	0.041	102	103	60.8	0.11	0.82	12.93	116.4	173.1	168.5	56.3	172.8	114	72	72	72	0.011	1.001	6.810	794
2213	353.609	352.339		0.16	0.16	1.29	1.04	0.36	85	85	72	2.85	2	76	0.043	100	100	61.2	-0.43	0.76	14.80	116.3	172.9	168.4	56.3	172.6	112	72	72	72	0.011	1.001	6.321	736
2214	353.769	352.501		0.16	0.16	1.29	1.04	0.36	85	85	72	2.85	2	76	0.045	98	99	60.5	0.69	0.86	15.26	116.1	172.8	168.2	56.3	172.5	112	72	72	72	0.011	1.001	7.130	829
2215	353.928	352.660		0.16	0.16	1.29	1.04	0.36	85	85	72	2.87	2	76	0.043	99	100	61.0	-0.47	0.80	15.14	116.1	172.7	168.1	56.3	172.4	113	72	72	72	0.011	1.001	6.639	772
2216	354.089	352.821		0.16	0.16	1.29	1.04	0.36	85	85	73	2.86	2	76	0.043	101	101	61.4	-0.39	0.84	15.36	115.9	172.6	168.0	56.3	172.2	112	72	72	73	0.011	1.001	6.972	809
2217	354.248	352.982		0.16	0.16	1.29	1.04	0.36	85	85	73	2.86	2	76	0.040	103	105	61.7	-0.28	0.87	15.26	115.8	172.4	167.9	56.3	172.1	111	72	72	73	0.011	1.001	7.292	846
2218	354.408	353.142		0.16	0.16	1.29	1.04	0.36	85	85	72	2.87	2	76	0.043	100	100	61.0	0.69	0.78	14.44	115.7	172.3	167.7	56.3	172.0	111	72	72	72	0.011	1.001	6.491	752
2219	354.569	353.302		0.16	0.16	1.29	1.04	0.36	85	85	72	2.85	2	76	0.043	101	100	61.5	-0.49	0.82	15.50	115.6	172.2	167.6	56.3	171.9	110	72	72	72	0.011	1.001	6.808	788
2220	354.729	353.463		0.16	0.16	1.28	1.04	0.36	85	85	73	2.87	2	76	0.044	99	100	60.8	0.69	0.80	13.14	115.5	172.1	167.6	56.3	171.8	110	72	72	73	0.011	1.001	6.691	774
2221	354.890	353.624		0.16	0.16	1.29	1.04	0.36	85	85	73	2.86	2	76	0.043	101	101	61.5	-0.69	0.78	15.49	115.3	171.9	167.4	56.3	171.6	110	72	72	73	0.011	1.001	6.522	753
2222	355.049	353.784		0.16	0.16	1.29	1.04	0.36	85	85	73	2.86	2	76	0.044	98	99	61.2	0.25	0.83	15.51	115.2	171.7	167.2	56.3	171.4	109	72	72	73	0.010	1.001	6.896	795

Elapsed Time	Particulate Sampling Data																	Fuel Weight, lb		Flow, gpm		Temperature Data, oF												
	Gas Meter Cubic Feet (1)	Gas Meter Cubic Feet (2)	Gas Meter Cubic Feet (amb)	Sample Rate, cfm (1)	Sample Rate, cfm (2)	Orifice dH (1)	Orifice dH (2)	Orifice dH (amb)	Meter oF (1)	Meter oF (2)	Meter oF (amb)	Meter Vac. In. Hg. (1)	Meter Vac. In. Hg. (2)	Dilution Tunnel Temp.	Dilution Tunnel dP	Pro. Rate (%) (1)	Pro. Rate (%) (2)	Scale Reading	Weight Change	Load Side Liquid Flow Rate	Boiler Side Liquid Flow Rate (optional)	Thermopile ΔT	Boiler to Heat Exch. Temp.	Heat Exch to Boiler Temp.	Inlet Load Temp.	Outlet Load Temp.	Stack	Filter (1)	Filter (2)	Ambient		Specific Heat of Inlet Water (BTU/lb-°F)	Mass Flow Rate of Inlet Water (lb/min)	Heat Output, Btu
2223	355.209	353.945		0.16	0.16	1.29	1.04	0.36	85	85	73	2.86	2	76	0.045	98	99	61.0	0.19	0.84	15.42	115.0	171.7	167.2	56.3	171.3	108	72	72	73	0.010	1.001	6.990	805
2224	355.369	354.106		0.16	0.16	1.29	1.04	0.36	85	85	72	2.85	2	76	0.043	100	101	61.5	-0.49	0.83	14.77	114.9	171.5	167.0	56.3	171.2	108	72	72	72	0.010	1.001	6.946	799
2225	355.529	354.266		0.16	0.16	1.28	1.04	0.36	85	85	72	2.86	2	76	0.044	99	99	60.9	0.62	0.84	15.51	114.8	171.4	166.9	56.3	171.1	107	72	72	72	0.010	1.001	6.968	801
2226	355.689	354.427		0.16	0.16	1.29	1.04	0.36	85	85	72	2.86	2	76	0.043	100	101	61.7	-0.82	0.78	15.45	114.6	171.2	166.9	56.3	170.9	108	72	72	72	0.010	1.001	6.482	744
2227	355.849	354.588		0.16	0.16	1.29	1.04	0.36	85	85	72	2.87	2	76	0.044	99	100	61.2	0.50	0.78	15.51	114.5	171.2	166.9	56.3	170.8	107	72	72	72	0.010	1.001	6.481	743
2228	356.009	354.748		0.16	0.16	1.29	1.04	0.36	85	85	72	2.86	2	76	0.044	99	99	61.4	-0.23	0.76	15.43	114.5	171.1	166.6	56.3	170.7	107	72	72	72	0.010	1.001	6.318	724
2229	356.168	354.908		0.16	0.16	1.30	1.04	0.36	85	85	72	2.87	2	76	0.043	99	100	61.4	0.01	0.82	15.01	114.3	170.9	166.4	56.3	170.6	107	72	72	72	0.010	1.001	6.808	779
2230	356.328	355.069		0.16	0.16	1.29	1.04	0.36	85	85	72	2.88	2	82	0.043	101	101	61.4	-0.01	0.78	15.48	114.1	170.7	166.3	56.3	170.4	106	72	72	72	0.010	1.001	6.486	741
2231	356.488	355.230		0.16	0.16	1.29	1.04	0.36	85	85	73	2.87	2	78	0.038	107	108	61.2	0.19	0.80	15.59	114.1	170.7	166.2	56.3	170.4	135	73	73	73	0.026	1.001	6.645	759
2232	356.648	355.390		0.16	0.16	1.29	1.05	0.36	85	85	72	2.85	2	76	0.043	100	100	60.8	0.40	0.76	15.48	114.0	170.6	166.0	56.3	170.2	135	73	72	72	0.013	1.001	6.320	721
2233	356.808	355.550		0.16	0.16	1.29	1.05	0.36	85	85	72	2.87	2	76	0.041	102	103	60.8	0.06	0.82	15.47	113.8	170.4	166.0	56.4	170.1	127	73	72	72	0.012	1.001	6.808	775
2234	356.969	355.711		0.16	0.16	1.29	1.04	0.36	85	85	73	2.86	2	76	0.043	101	101	61.2	-0.46	0.80	15.48	113.7	170.3	165.8	56.3	170.0	123	73	72	73	0.011	1.001	6.645	756
2235	357.129	355.871		0.16	0.16	1.28	1.04	0.36	85	85	73	2.86	2	76	0.043	100	100	61.1	0.15	0.74	15.53	113.5	170.2	165.6	56.3	169.8	120	72	72	73	0.011	1.001	6.160	700
2236	357.289	356.031		0.16	0.16	1.28	1.04	0.36	85	85	72	2.87	2	76	0.044	99	99	61.2	-0.07	0.82	15.55	113.4	170.0	165.5	56.3	169.8	117	73	72	72	0.011	1.001	6.812	774
2237	357.449	356.193		0.16	0.16	1.29	1.04	0.36	85	85	73	2.86	2	76	0.044	99	100	61.1	0.05	0.82	15.53	113.3	169.9	165.4	56.3	169.6	116	73	72	73	0.011	1.001	6.808	772
2238	357.609	356.353		0.16	0.16	1.29	1.04	0.36	85	85	72	2.86	2	76	0.043	100	100	60.7	0.36	0.82	14.87	113.1	169.7	165.3	56.3	169.4	114	72	72	72	0.011	1.001	6.812	771
2239	357.769	356.513		0.16	0.16	1.29	1.04	0.36	85	85	72	2.85	2	77	0.044	99	99	61.1	-0.32	0.82	15.58	113.1	169.7	165.2	56.3	169.4	114	72	72	72	0.011	1.001	6.811	771
2240	357.928	356.674		0.16	0.16	1.28	1.04	0.36	85	85	73	2.86	2	76	0.043	99	101	60.8	0.23	0.80	15.49	112.9	169.6	165.1	56.4	169.2	113	72	72	73	0.010	1.001	6.647	751
2241	358.088	356.834		0.16	0.16	1.29	1.04	0.36	85	85	72	2.86	2	76	0.045	98	98	61.3	-0.48	0.78	15.56	112.7	169.4	164.9	56.4	169.1	112	72	72	72	0.010	1.001	6.485	732
2242	358.248	356.994		0.16	0.16	1.29	1.05	0.36	85	85	72	2.87	2	76	0.043	100	100	61.1	0.17	0.78	15.29	112.5	169.3	164.8	56.4	168.9	112	72	72	72	0.010	1.001	6.482	730
2243	358.408	357.155		0.16	0.16	1.29	1.04	0.36	85	85	72	2.86	2	76	0.042	101	102	61.1	0.04	0.78	14.25	112.5	169.1	164.7	56.4	168.8	111	72	72	72	0.010	1.001	6.481	730
2244	358.568	357.316		0.16	0.16	1.29	1.04	0.36	85	85	73	2.87	2	76	0.045	98	99	60.8	0.31	0.76	15.49	112.3	169.0	164.5	56.4	168.6	110	72	72	73	0.010	1.001	6.324	711
2245	358.728	357.476		0.16	0.16	1.29	1.04	0.36	85	85	72	2.86	2	76	0.043	100	100	61.5	-0.66	0.82	15.54	112.2	168.9	164.5	56.4	168.6	109	72	72	72	0.010	1.001	6.807	765
2246	358.888	357.636		0.16	0.16	1.29	1.04	0.36	85	85	72	2.87	2	76	0.045	98	98	61.2	0.29	0.82	15.56	112.1	168.8	164.3	56.4	168.5	109	72	72	72	0.010	1.001	6.807	764
2247	359.048	357.797		0.16	0.16	1.29	1.04	0.36	85	85	73	2.86	2	76	0.045	98	99	61.2	-0.02	0.84	15.58	111.9	168.7	164.2	56.4	168.3	109	72	72	73	0.010	1.001	6.973	781
2248	359.208	357.957		0.16	0.16	1.29	1.04	0.36	85	85	72	2.86	2	76	0.042	101	101	61.1	0.07	0.86	15.52	111.9	168.5	164.1	56.3	168.2	109	73	72	72	0.010	1.001	7.132	799
2249	359.369	358.118		0.16	0.16	1.29	1.04	0.36	85	85	72	2.87	2	76	0.045	98	99	61.2	-0.05	0.82	15.48	111.8	168.4	164.0	56.3	168.1	109	72	72	72	0.010	1.001	6.816	763
2250	359.529	358.279		0.16	0.16	1.29	1.04	0.36	85	85	72	2.86	2	76	0.045	98	99	61.6	-0.43	0.80	15.49	111.7	168.3	163.9	56.3	168.0	108	72	72	72	0.009	1.001	6.652	744
2251	359.689	358.438		0.16	0.16	1.29	1.04	0.36	85	85	73	2.85	2	76	0.043	100	100	61.2	0.40	0.84	15.53	111.4	168.1	163.7	56.3	167.8	108	72	72	73	0.009	1.001	6.974	778
2252	359.849	358.599		0.16	0.16	1.29	1.04	0.36	85	85	72	2.85	2	77	0.039	105	106	61.2	-0.01	0.72	15.46	111.3	168.0	163.6	56.3	167.7	108	72	72	72	0.010	1.001	5.998	669
2253	360.009	358.760		0.16	0.16	1.29	1.04	0.36	85	85	73	2.85	2	77	0.043	100	101	61.2	0.01	0.76	15.51	111.2	167.9	163.7	56.4	167.6	107	72	72	73	0.009	1.001	6.320	704
2254	360.169	358.920		0.16	0.16	1.28	1.04	0.36	85	85	72	2.86	2	76	0.042	101	101	61.1	0.05	0.77	15.58	111.1	167.8	163.5	56.4	167.5	107	72	72	72	0.009	1.001	6.393	711
2255	360.328	359.080		0.16	0.16	1.29	1.04	0.36	85	85	73	2.86	2	76	0.041	102	103	61.6	-0.43	0.87	15.49	110.9	167.6	163.3	56.4	167.3	106	72	72	73	0.010	1.001	7.293	810
2256	360.488	359.241		0.16	0.16	1.29	1.04	0.36	85	85	72	2.86	2	77	0.042	101	102	61.1	0.51	0.80	15.56	110.8	167.5	163.2	56.4	167.2	106	72	72	72	0.009	1.001	6.649	738
2257	360.648	359.401		0.16	0.16	1.29	1.04	0.36	85	85	72	2.87	2	77	0.044	99	99	61.5	-0.43	0.78	15.53	110.7	167.4	163.0	56.4	167.1	107	72	72	72	0.009	1.001	6.487	719
2258	360.808	359.561		0.16	0.16	1.29	1.04	0.36	85	85	72	2.85	2	76	0.043	100	100	61.7	-0.20	0.76	15.49	110.6	167.2	162.9	56.4	166.9	107	72	72	72	0.009	1.001	6.321	700
2259	360.968	359.722		0.16	0.16	1.29	1.04	0.36	85	85	72	2.87	2	77	0.042	101	102	60.8	0.88	0.80	15.48	110.4	167.1	162.8	56.4	166.8	106	72	72	72	0.009	1.001	6.643	734
2260	361.128	359.883		0.16	0.16	1.29	1.04	0.36	85	85	72	2.85	2	77	0.044	99	100	61.2	-0.40	0.84	15.55	110.3	167.0	162.7	56.4	166.7	105	72	72	72	0.009	1.001	6.975	770
2261	361.288	360.043		0.16	0.16	1.29	1.04	0.36	85	85	72	2.87	2	82	0.044	99	100	61.2	0.02	0.78	15.50	110.1	166.8	162.5	56.4	166.5	104	72	72	72	0.009	1.001	6.483	715
2262	361.448	360.203		0.16	0.16	1.29	1.04	0.36	85	85	72	2.85	2	77	0.044	99	99	61.1	0.09	0.78	15.41	110.0	166.7	162.4	56.4	166.4	136	73	72	72	0.025	1.001	6.483	714
2263	361.608	360.364		0.16	0.16	1.29	1.04	0.36	85	85	72	2.86	2	77	0.042	101	102	61.4	-0.36	0.78	15.52	110.0	166.7	162.3	56.3	166.3	131	72	72	72	0.011	1.001	6.488	715
2264	361.768	360.524		0.16	0.16	1.29	1.04	0.36	85	85	72	2.87	2	77	0.043	100	100	61.2	0.28	0.78	15.42	109.9	166.5	162.1	56.3	166.2	122	72	72	72	0.010	1.001	6.482	713
2265	361.928	360.684		0.16	0.16	1.29	1.04	0.36	85	85	72	2.86	2	76	0.042	101	101	60.9	0.31	0.84	15.45	109.8	166.4	162.0	56.3	166.1	118	72	72	72	0.010	1.001	6.969	766
2266	362.088	360.846		0.16	0.16	1.29	1.04	0.36	85	85	72	2.85	2	76	0.043	100	102	61.5	-0.59	0.82	15.57	109.7	166.3	161.9	56.3	166.0	116	72	72	72	0.010	1.001	6.806	747
2267	362.248	361.005		0.16	0.16	1.29	1.04	0.36	85	85	72	2.85	2	76	0.044	99	98	61.6	-0.13	0.86	15.49	109.4	166.1	161.8	56.3	165.8	114	72	72	72	0.010	1.001	7.135	782
2268	362.408	361.166		0.16	0.16	1.28	1.04	0.36	85	85	72	2.85	2	76	0.044	99	100	61.9	-0.28	0.82	15.56	109.4	166.1	161.8	56.4	165.7	112	72	72	72	0.010	1.001	6.808	745
2269	362.568	361.327		0.16	0.16	1.28	1.04	0.36	85	85	72	2.85	2	76	0.043	100	101	62.1	-0.20	0.76	15.46	109.3	165.9	161.6	56.3	165.6	111	72	72	72	0.010	1.001	6.323	692
2270	362.727	361.487		0.16	0.16	1.29	1.04	0.36	85	85	72	2.87	2	76	0.040	103	104	61.2	0.90	0.78	15.54	109.1	165.7	161.7	56.4	165.4	110	72	72	72	0.009	1.001	6.485	708
2271	362.888	361.647		0.16	0.16	1.28	1.04	0.36	85	85	72	2.86	2	76	0.045	98	98	61.4	-0.23	0.82	15.48	109.1	165.7	161.4	56.3	165.4	109	72	72	72	0.009	1.001	6.807	743
2272	363.047	361.808		0.16	0.16	1.29	1.04	0.36	85	85	72	2.87	2	76	0.041	102	103	61.4	-0.01	0.82	15.47	108.9	165.6	161.3	56.3	165.2	108	72	72	72	0.009	1.001	6.800	742
2273	363.207	361.968		0.16	0.16	1.29	1.04	0.36	85	85	72	2.85	2	76	0.042	101	101	61.4	0.01	0.80	15.58	108.8	165.4	161.2	56.3	165.1	107	72	72	72	0.009	1.001	6.650	725
2274	363.367	362.128		0.16	0.16	1.29	1.04	0.36	85	85	72	2.86	2	76	0.045	98	98	61.6	-0.17	0.76	15.51	108.7	165.2	161.0	56.3	165.0	107	72	72	72	0.009	1.001	6.314	687
2275	363.527	362.289		0.16	0.16	1.29	1.04	0.36	85	85	72	2.87	2	76	0.038	106	107	60.6	0.95	0.82	15.44	108.5	165.1	160.8	56.3	164.8	107	72	72	72	0.009	1.001	6.825	741
2276	363.687	362.450		0.16	0.16	1.29	1.04	0.36	85	85	72	2.87	2	76	0.044	99	100	61.5	-0.86	0.87	15.51	108.4	165.0	160.7	56.2	164.7	106	72	72	72	0.009	1.001	7.249	787
2277	363.847	362.610		0.16	0.16	1.29	1.04	0.36	85	85	71	2.86	2	76	0.045	98	98	61.1	0.38	0.80	15.45	108.3	164.9	160.7	56.2	164.6	106	72	72	71	0.009	1.001	6.644	721
2278	364.008	362.771		0.16	0.16	1.29	1.05	0.36	85	85	71	2.85	2	77	0.044	100	100	61.2	-0.06	0.81	15.49	108.2	164.8	160.5	56.3	164.5	107	72	72	71	0.010	1.001	6.787	735
2279	364.168	362.932		0.16	0.16	1.28	1.04	0.36	85	85	71	2.86	2	77	0.041	102	103	60.7	0.43	0.70	15.55	107.9	164.7	160.5	56.4	164.4	106	72	72	71	0.009	1.001	5.840	631
2280	364.328	363.092		0.16	0.16	1.29	1.04	0.36	85	85	71	2.86	2	77	0.042	101	102	61.2	-0.51	0.80	15.42	107.9	164.5	160.1	56.4	164.2	106	72	72	71	0.009	1.001	6.643	717
2281	364.488	363.253		0.16	0.16	1.29	1.05	0.36	85	85	71	2.86	2	76	0.041	102	103	61.2	0.00	0.86	15.48	107.7	164.4	159.9	56.4	164.1	105	72	72	71	0.009	1.001	7.150	771
2282	364.648	363.414		0.16	0.16	1.29	1.05	0.36	85	85	71	2.86	2	76	0.044	99	100	61.9	-0.64	0.82	15.47	107.5	164.3	159.7	56.5	163.9	105	72	72	71	0.008	1.001	6.813	733
2283	364.808	363.575		0.16	0.16	1.29	1.04	0.36	85	85	72	2.85	2	76	0.044	99	100	61.1	0.78	0.82	15.45	107.4	164.2	159.6	56.4	163.8	105	72	72	72	0.008	1.001	6.843	736
2284	364.968	363.735		0.16	0.16	1.29	1.05	0.36	84	85	72	2.86	2	76	0.044	99	99	61.3	-0.22	0.84	15.39	107.3	163.9	159.4	56.3	163.6	106	72	72	72	0.008	1.001	6.971	749

Elapsed Time	Particulate Sampling Data																	Fuel Weight, lb		Flow, gpm		Temperature Data, oF														
	Gas Meter Cubic Feet (1)	Gas Meter Cubic Feet (2)	Gas Meter Cubic Feet (amb)	Sample Rate, cfm (1)	Sample Rate, cfm (2)	Orifice dH (1)	Orifice dH (2)	Orifice dH (amb)	Meter oF (1)	Meter oF (2)	Meter oF (amb)	Meter Vac. In. Hg. (1)	Meter Vac. In. Hg. (2)	Dilution Tunnel Temp.	Dilution Tunnel dP	Pro. Rate (%) (1)	Pro. Rate (%) (2)	Scale Reading	Weight Change	Load Side Liquid Flow Rate	Boiler Side Liquid Flow Rate (optional)	Thermopile ΔT	Boiler to Heat Exch. Temp.	Heat Exch to Boiler Temp.	Inlet Load Temp.	Outlet Load Temp.	Stack	Filter (1)	Filter (2)	Ambient		Specific Heat of Inlet Water (BTU/lb-°F)	Mass Flow Rate of Inlet Water (lb/min)	Heat Output, Btu
2285	365.128	363.895		0.16	0.16	1.29	1.05	0.36	84	85	72	2.87	2	76	0.046	97	97	61.6	-0.32	0.88	15.56	107.2	163.9	159.4	56.3	163.5	105	72	72	72	0.009	1.001	7.300	784
2286	365.288	364.056		0.16	0.16	1.29	1.04	0.36	84	85	72	2.85	2	76	0.043	100	101	61.9	-0.24	0.80	15.56	107.2	163.7	159.3	56.3	163.5	104	72	72	72	0.009	1.001	6.652	714
2287	365.447	364.217		0.16	0.16	1.28	1.04	0.36	84	85	72	2.86	2	76	0.043	100	101	61.5	0.40	0.78	15.46	106.9	163.6	159.1	56.3	163.2	104	72	72	72	0.008	1.001	6.487	695
2288	365.607	364.377		0.16	0.16	1.29	1.04	0.36	84	85	72	2.85	2	76	0.044	99	99	61.4	0.08	0.86	15.54	106.9	163.5	159.0	56.3	163.2	104	72	72	72	0.009	1.001	7.134	764
2289	365.767	364.538		0.16	0.16	1.29	1.04	0.36	84	85	72	2.85	2	76	0.045	98	99	61.4	-0.05	0.82	15.54	106.8	163.3	158.8	56.3	163.0	104	72	72	72	0.008	1.001	6.811	728
2290	365.927	364.698		0.16	0.16	1.29	1.04	0.36	84	85	72	2.86	2	76	0.043	100	100	60.7	0.79	0.84	15.48	106.6	163.2	158.8	56.3	162.9	103	72	72	72	0.008	1.001	6.972	744
2291	366.087	364.859		0.16	0.16	1.29	1.04	0.36	84	85	72	2.87	2	76	0.044	99	100	60.9	-0.20	0.82	15.47	106.4	163.1	158.7	56.3	162.7	103	72	72	72	0.008	1.001	6.811	726
2292	366.247	365.020		0.16	0.16	1.29	1.04	0.36	84	85	72	2.86	2	81	0.042	102	103	61.5	-0.67	0.80	15.63	106.3	162.9	158.5	56.3	162.7	103	72	72	72	0.008	1.001	6.644	707
2293	366.408	365.180		0.16	0.16	1.29	1.04	0.36	84	85	72	2.86	2	77	0.043	101	100	61.4	0.10	0.84	15.53	106.3	162.8	158.5	56.2	162.5	139	72	72	72	0.023	1.001	6.970	741
2294	366.568	365.340		0.16	0.16	1.29	1.04	0.36	84	85	72	2.85	2	76	0.042	101	101	61.4	0.02	0.88	15.49	106.1	162.7	158.4	56.3	162.4	127	72	72	72	0.010	1.001	7.296	775
2295	366.728	365.501		0.16	0.16	1.28	1.04	0.36	84	85	72	2.86	2	76	0.042	101	102	61.6	-0.16	0.82	15.60	106.1	162.6	158.3	56.2	162.3	119	72	72	72	0.010	1.001	6.808	723
2296	366.887	365.662		0.16	0.16	1.28	1.04	0.36	84	85	72	2.86	2	76	0.042	101	102	61.4	0.15	0.87	15.45	106.0	162.4	158.2	56.2	162.2	115	72	72	72	0.009	1.001	7.292	774
2297	367.047	365.822		0.16	0.16	1.28	1.04	0.36	84	85	72	2.86	2	76	0.043	100	100	61.4	0.05	0.80	15.45	105.8	162.3	158.1	56.2	162.0	113	72	72	72	0.009	1.001	6.644	704
2298	367.207	365.982		0.16	0.16	1.28	1.04	0.36	84	85	72	2.86	2	76	0.043	100	100	61.5	-0.13	0.84	15.54	105.8	162.2	158.0	56.2	162.0	112	72	72	72	0.009	1.001	6.972	738
2299	367.367	366.143		0.16	0.16	1.29	1.04	0.36	84	85	72	2.85	2	76	0.042	101	102	60.9	0.58	0.86	15.45	105.6	162.1	157.8	56.2	161.8	110	72	72	72	0.009	1.001	7.136	755
2300	367.527	366.303		0.16	0.16	1.29	1.04	0.36	84	85	72	2.85	2	76	0.038	107	107	61.5	-0.58	0.87	15.50	105.5	162.0	157.8	56.2	161.7	110	72	72	72	0.009	1.001	7.292	770
2301	367.686	366.464		0.16	0.16	1.29	1.04	0.36	84	85	72	2.86	2	76	0.043	100	101	61.1	0.36	0.82	15.47	105.3	161.8	157.6	56.2	161.5	108	72	72	72	0.009	1.001	6.809	718
2302	367.846	366.625		0.16	0.16	1.29	1.04	0.36	84	85	72	2.87	2	76	0.042	101	102	62.1	-0.95	0.82	15.54	105.2	161.6	157.4	56.2	161.4	107	72	72	72	0.009	1.001	6.816	718
2303	368.006	366.785		0.16	0.16	1.29	1.04	0.36	84	85	72	2.85	2	76	0.045	98	98	61.4	0.69	0.82	15.58	105.0	161.5	157.4	56.2	161.3	107	72	72	72	0.008	1.001	6.810	716
2304	368.166	366.945		0.16	0.16	1.28	1.04	0.36	84	85	72	2.85	2	76	0.042	101	101	60.5	0.94	0.82	15.55	105.0	161.4	157.3	56.2	161.1	106	72	72	72	0.008	1.001	6.808	715
2305	368.326	367.107		0.16	0.16	1.29	1.04	0.36	84	85	72	2.86	2	76	0.040	104	105	61.5	-1.02	0.86	15.52	104.8	161.3	157.2	56.2	161.0	105	72	72	72	0.008	1.001	7.137	749
2306	368.486	367.267		0.16	0.16	1.29	1.04	0.36	84	85	72	2.86	2	76	0.041	103	103	61.5	0.00	0.81	15.51	104.7	161.2	157.0	56.2	160.9	105	72	72	72	0.008	1.001	6.786	712
2307	368.646	367.427		0.16	0.16	1.29	1.04	0.36	84	85	72	2.85	2	76	0.043	100	100	61.5	-0.03	0.86	15.50	104.6	161.0	156.8	56.2	160.8	105	72	72	72	0.009	1.001	7.135	747
2308	368.806	367.588		0.16	0.16	1.29	1.04	0.36	84	85	72	2.86	2	76	0.044	99	100	61.0	0.47	0.84	15.50	104.5	161.0	156.8	56.2	160.7	104	72	72	72	0.008	1.001	7.020	734
2309	368.966	367.748		0.16	0.16	1.29	1.04	0.36	84	85	72	2.85	2	76	0.042	101	101	61.4	-0.40	0.85	15.50	104.3	160.8	156.7	56.2	160.6	104	72	72	72	0.009	1.001	7.074	739
2310	369.126	367.909		0.16	0.16	1.28	1.04	0.36	84	85	72	2.86	2	76	0.044	99	100	61.2	0.27	0.84	15.54	104.2	160.7	156.6	56.2	160.4	105	72	72	72	0.008	1.001	7.033	734
2311	369.286	368.069		0.16	0.16	1.28	1.04	0.36	84	85	72	2.86	2	76	0.045	98	98	61.0	0.12	0.78	15.52	104.1	160.5	156.3	56.2	160.2	104	72	72	72	0.008	1.001	6.488	676
2312	369.445	368.230		0.16	0.16	1.28	1.04	0.36	84	85	72	2.86	2	76	0.039	105	106	60.9	0.13	0.85	15.46	103.9	160.4	156.2	56.2	160.1	103	72	72	72	0.008	1.001	7.075	736
2313	369.605	368.390		0.16	0.16	1.28	1.04	0.36	84	85	72	2.86	2	76	0.044	99	99	61.6	-0.70	0.82	15.45	103.8	160.3	156.2	56.2	160.0	103	72	72	72	0.008	1.001	6.808	708
2314	369.765	368.550		0.16	0.16	1.29	1.04	0.36	84	85	72	2.85	2	76	0.045	98	98	61.4	0.26	0.86	15.61	103.8	160.2	156.1	56.2	159.9	104	72	72	72	0.008	1.001	7.131	741
2315	369.924	368.712		0.16	0.16	1.29	1.04	0.36	84	85	72	2.85	2	76	0.043	100	102	61.6	-0.22	0.76	15.42	103.6	160.1	156.2	56.1	159.8	103	72	72	72	0.008	1.001	6.324	656
2316	370.084	368.871		0.16	0.16	1.29	1.04	0.36	84	85	72	2.86	2	76	0.040	104	103	61.4	0.20	0.80	15.50	103.6	159.9	155.7	56.1	159.7	103	72	72	72	0.008	1.001	6.654	690
2317	370.244	369.031		0.16	0.16	1.28	1.04	0.36	84	85	72	2.85	2	76	0.042	101	101	60.6	0.80	0.80	15.50	103.3	159.8	155.6	56.2	159.5	103	72	72	72	0.008	1.001	6.648	688
2318	370.403	369.193		0.16	0.16	1.29	1.04	0.36	84	85	72	2.85	2	76	0.043	100	102	61.2	-0.61	0.88	15.51	103.2	159.8	155.5	56.2	159.4	102	72	72	72	0.008	1.001	7.295	754
2319	370.563	369.352		0.16	0.16	1.29	1.04	0.36	84	85	72	2.86	2	82	0.040	104	104	60.8	0.41	0.84	15.51	103.1	159.5	155.4	56.2	159.2	103	72	72	72	0.008	1.001	6.969	719
2320	370.724	369.512		0.16	0.16	1.28	1.04	0.36	84	85	72	2.85	2	85	0.042	103	102	60.6	0.14	0.86	15.43	103.1	159.5	155.4	56.2	159.2	140	72	72	72	0.025	1.001	7.134	736
2321	370.884	369.673		0.16	0.16	1.29	1.04	0.36	84	85	72	2.85	2	87	0.041	104	104	58.7	1.89	0.80	15.47	102.9	159.4	155.2	56.2	159.1	159	72	72	72	0.025	1.001	6.646	685
2322	371.043	369.833		0.16	0.16	1.29	1.04	0.36	84	85	72	2.86	2	90	0.040	105	105	59.6	-0.80	0.86	15.46	103.0	159.5	155.3	56.2	159.2	171	73	72	72	0.027	1.001	7.134	736
2323	371.203	369.993		0.16	0.16	1.29	1.04	0.36	84	85	72	2.86	2	93	0.045	99	100	58.1	1.40	0.84	15.48	103.4	159.9	155.7	56.2	159.5	186	73	72	72	0.032	1.001	6.968	721
2324	371.362	370.153		0.16	0.16	1.28	1.05	0.36	84	85	72	2.87	2	95	0.042	102	103	56.9	1.28	0.86	15.55	103.7	160.3	156.0	56.2	159.8	202	73	73	72	0.037	1.001	7.130	740
2325	371.521	370.313		0.16	0.16	1.29	1.04	0.36	84	85	72	2.86	2	98	0.041	104	105	56.1	0.75	0.80	15.51	104.3	160.8	156.5	56.1	160.4	216	73	73	72	0.035	1.001	6.648	694
2326	371.681	370.473		0.16	0.16	1.29	1.04	0.36	84	85	72	2.86	2	100	0.042	104	104	55.9	0.18	0.84	15.51	105.1	161.7	157.3	56.1	161.2	228	74	73	72	0.038	1.001	6.967	733
2327	371.840	370.633		0.16	0.16	1.29	1.04	0.36	84	85	72	2.86	2	102	0.040	106	106	54.9	1.04	0.76	15.50	106.0	162.6	158.2	56.1	162.1	236	74	73	72	0.037	1.001	6.320	671
2328	371.999	370.793		0.16	0.16	1.29	1.04	0.36	84	85	72	2.88	2	103	0.041	104	105	53.5	1.45	0.82	15.47	106.9	163.6	159.1	56.1	163.0	243	74	73	72	0.041	1.001	6.810	729
2329	372.159	370.952		0.16	0.16	1.29	1.04	0.36	84	85	72	2.88	2	104	0.038	109	109	53.1	0.33	0.84	15.47	107.9	164.6	160.1	56.1	164.0	248	75	74	72	0.039	1.001	6.972	753
2330	372.318	371.112		0.16	0.16	1.29	1.04	0.36	84	85	72	2.88	2	105	0.041	105	105	51.9	1.21	0.76	15.61	108.9	165.7	161.2	56.2	165.0	253	75	74	72	0.045	1.001	6.324	689
2331	372.478	371.271		0.16	0.16	1.29	1.04	0.36	84	85	72	2.88	2	106	0.041	105	105	51.9	0.05	0.84	15.53	110.0	166.7	162.4	56.1	166.1	257	75	74	72	0.042	1.001	6.965	767
2332	372.637	371.430		0.16	0.16	1.29	1.04	0.36	84	85	72	2.87	2	107	0.041	105	105	50.3	1.59	0.72	15.47	111.1	167.8	163.3	56.2	167.2	260	75	74	72	0.043	1.001	6.000	667
2333	372.796	371.590		0.16	0.16	1.29	1.04	0.36	84	85	72	2.88	2	108	0.041	105	106	49.8	0.44	0.82	15.59	112.2	169.0	164.6	56.2	168.4	263	75	74	72	0.042	1.001	6.799	764
2334	372.955	371.749		0.16	0.16	1.28	1.03	0.36	84	85	72	2.89	2	109	0.046	99	99	49.3	0.55	0.81	15.42	113.4	170.2	165.5	56.2	169.6	266	76	75	72	0.046	1.001	6.788	771
2335	373.114	371.908		0.16	0.16	1.28	1.04	0.36	84	85	72	2.88	2	110	0.042	104	104	47.6	1.71	0.86	15.56	114.4	171.3	166.8	56.2	170.6	269	76	75	72	0.043	1.001	7.132	817
2336	373.273	372.068		0.16	0.16	1.29	1.03	0.36	84	85	72	2.88	2	111	0.041	105	106	46.9	0.71	0.82	14.20	115.7	172.6	168.2	56.3	172.0	273	76	75	72	0.049	1.001	6.807	789
2337	373.432	372.226		0.16	0.16	1.28	1.03	0.36	84	85	72	2.88	2	112	0.040	107	106	45.7	1.17	0.77	15.46	116.9	173.8	169.0	56.3	173.2	277	77	75	72	0.048	1.001	6.390	748
2338	373.591	372.385		0.16	0.16	1.29	1.03	0.36	84	85	72	2.89	2	113	0.041	105	105	45.0	0.68	0.75	13.46	118.3	175.2	170.4	56.2	174.5	280	77	76	72	0.052	1.001	6.226	737
2339	373.750	372.545		0.16	0.16	1.29	1.03	0.36	84	85	72	2.90	2	113	0.045	101	101	43.4	1.62	0.79	13.12	119.5	176.4	171.4	56.3	175.8	282	77	76	72	0.049	1.001	6.600	790
2340	373.909	372.703		0.16	0.16	1.29	1.03	0.36	84	85	72	2.90	2	114	0.041	105	105	43.0	0.38	0.80	14.13	120.9	177.8	172.9	56.3	177.1	285	77	76	72	0.047	1.001	6.675	808
2341	374.068	372.862		0.16	0.16	1.28	1.03	0.36	84	85	72	2.90	2	114	0.046	100	100	41.5	1.50	0.81	14.13	122.1	179.2	174.1	56.3	178.5	288	78	76	72	0.050	1.001	6.739	824
2342	374.227	373.020		0.16	0.16	1.28	1.03	0.36	84	85	72	2.90	2	115	0.039	108	108	41.0	0.47	0.82	7.74	123.5	180.5	175.4	56.3	179.8	290	78	76	72	0.049	1.001	6.825	844
2343	374.385	373.179		0.16	0.16	1.28	1.03	0.36	84	85	72	2.90	2	99	0.044	100	101	41.0	0.08	0.82	9.84	124.3	181.2	176.0	56.3	180.7	292	78	76	72	0.047	1.001	6.803	847
2344	374.544	373.338		0.16	0.16	1.27	1.03	0.36	84	85	72	2.89	2	90	0.043	101	101	41.2	-0.27	0.82	11.07	124.8	181.6	176.4	56.3	181.1	276	78	76	72	0.036	1.001	6.809	851
2345	374.703	373.497		0.16	0.16	1.28	1.03	0.36	84	85	72	2.87	2	87	0.040	104	104	40.1	1.13	0.80	7.76	125.2	181.9	176.6	56.3	181.4	250	77	76	72	0.036	1.001	6.641	832
2346	374.862	373.656		0.16	0.16	1.28	1.03	0.36	84	85	72	2.86	2	85	0.044	99	99	39.7	0.43	0.84	8.15	125.4	182.2	177.0	56.3	181.7	235	77	76	72	0.034	1.001	6.971	875

Elapsed Time	Particulate Sampling Data																Fuel Weight, lb		Flow, gpm		Temperature Data, oF												
	Gas Meter Cubic Feet (1)	Gas Meter Cubic Feet (2)	Gas Meter Cubic Feet (amb)	Sample Rate, cfm (1)	Sample Rate, cfm (2)	Orifice dH (1)	Orifice dH (2)	Orifice dH (amb)	Meter oF (1)	Meter oF (2)	Meter oF (amb)	Meter Vac. In. Hg. (1)	Meter Vac. In. Hg. (2)	Dilution Tunnel Temp.	Dilution Tunnel dP	Pro. Rate (%) (1)	Pro. Rate (%) (2)	Scale Reading	Weight Change	Load Side Liquid Flow Rate	Boiler Side Liquid Flow Rate (optional)	Thermopile ΔT	Boiler to Heat Exch. Temp.	Heat Exch to Boiler Temp.	Inlet Load Temp.	Outlet Load Temp.	Stack	Filter (1)	Filter (2)	Ambient		Specific Heat of Inlet Water (BTU/lb-°F)	Mass Flow Rate of Inlet Water (lb/min)	Heat Output, Btu
2347	375.022	373.817		0.16	0.16	1.28	1.03	0.36	84	85	72	2.87	2	83	0.043	101	102	39.9	-0.26	0.84	7.81	125.6	182.4	177.1	56.3	181.9	225	77	76	72	0.032	1.001	6.972	877
2348	375.181	373.976		0.16	0.16	1.28	1.03	0.36	84	85	72	2.87	2	81	0.044	99	99	39.5	0.41	0.76	7.66	125.9	182.6	177.5	56.3	182.1	219	76	75	72	0.032	1.001	6.322	797
2349	375.341	374.136		0.16	0.16	1.28	1.03	0.36	84	85	72	2.86	2	80	0.041	103	103	39.9	-0.34	0.76	6.49	126.0	182.8	177.7	56.3	182.3	217	76	75	72	0.032	1.001	6.321	798
2350	375.501	374.296		0.16	0.16	1.28	1.03	0.36	84	85	72	2.87	2	79	0.043	100	101	39.5	0.36	0.87	8.28	126.2	182.9	177.9	56.2	182.4	213	76	75	72	0.032	1.001	7.293	921
2351	375.661	374.455		0.16	0.16	1.28	1.03	0.36	84	85	72	2.87	2	79	0.043	100	100	39.1	0.35	0.86	2.36	126.2	182.9	177.7	56.3	182.5	210	76	75	72	0.030	1.001	7.132	901
2352	375.820	374.615		0.16	0.16	1.28	1.03	0.36	84	85	72	2.88	2	79	0.041	102	103	39.4	-0.28	0.82	9.05	126.2	183.0	177.9	56.4	182.6	207	76	75	72	0.030	1.001	6.804	860
2353	375.980	374.775		0.16	0.16	1.27	1.03	0.36	84	85	72	2.87	2	78	0.045	98	98	39.1	0.32	0.84	9.00	126.3	183.1	178.0	56.4	182.6	204	76	75	72	0.030	1.001	6.967	881
2354	376.139	374.934		0.16	0.16	1.28	1.03	0.36	84	85	72	2.86	2	78	0.045	97	98	39.4	-0.30	0.82	9.95	126.4	183.1	177.9	56.3	182.7	202	75	75	72	0.029	1.001	6.815	862
2355	376.298	375.094		0.16	0.16	1.28	1.03	0.36	84	85	72	2.86	2	77	0.041	102	103	38.6	0.75	0.82	8.35	126.4	183.1	177.9	56.2	182.6	201	75	75	72	0.029	1.001	6.821	863
2356	376.458	375.254		0.16	0.16	1.28	1.03	0.36	84	85	72	2.85	2	77	0.045	98	98	38.8	-0.12	0.88	10.73	126.5	183.1	177.9	56.2	182.7	199	75	75	72	0.030	1.001	7.301	925
2357	376.617	375.414		0.16	0.16	1.27	1.03	0.36	84	85	71	2.86	2	77	0.043	100	100	39.2	-0.41	0.86	9.08	126.4	183.0	177.9	56.2	182.6	197	75	74	71	0.031	1.001	7.133	903
2358	376.777	375.574		0.16	0.16	1.28	1.03	0.36	84	85	71	2.85	2	77	0.043	100	100	38.7	0.46	0.82	4.97	126.5	183.0	177.9	56.2	182.7	194	74	74	71	0.031	1.001	6.807	862
2359	376.937	375.734		0.16	0.16	1.28	1.03	0.36	84	85	72	2.85	2	77	0.042	101	102	38.8	-0.04	0.86	6.58	126.4	183.0	177.8	56.2	182.6	192	74	74	72	0.033	1.001	7.132	903
2360	377.096	375.894		0.16	0.16	1.28	1.03	0.36	84	85	72	2.86	2	77	0.042	101	102	38.7	0.04	0.78	7.80	126.3	183.0	177.8	56.3	182.6	189	74	74	72	0.032	1.001	6.482	820
2361	377.256	376.054		0.16	0.16	1.29	1.03	0.36	84	85	72	2.87	2	77	0.045	98	98	38.7	0.03	0.84	7.61	126.4	183.0	177.8	56.2	182.6	187	74	74	72	0.032	1.001	6.967	882
2362	377.417	376.214		0.16	0.16	1.28	1.03	0.36	84	85	72	2.87	2	77	0.042	102	102	39.1	-0.42	0.82	3.83	126.4	183.0	177.8	56.2	182.6	185	74	74	72	0.032	1.001	6.812	862
2363	377.577	376.373		0.16	0.16	1.27	1.03	0.36	84	85	72	2.87	2	77	0.042	101	101	38.9	0.23	0.89	6.55	126.3	182.9	177.7	56.2	182.5	182	74	74	72	0.031	1.001	7.452	942
2364	377.740	376.533		0.16	0.16	1.27	1.03	0.36	84	85	72	2.86	2	77	0.042	103	102	38.9	-0.06	0.83	4.79	126.2	182.8	177.7	56.2	182.4	179	74	74	72	0.031	1.001	6.948	878
2365	377.885	376.694		0.14	0.16	1.27	1.03	0.36	84	85	72	2.87	2	77	0.043	91	101	38.5	0.45	0.76	5.19	126.3	182.9	177.9	56.1	182.4	177	74	74	72	0.030	1.001	6.338	801
2366	378.029	376.853		0.14	0.16	1.28	1.03	0.36	84	85	72	2.85	2	76	0.042	91	101	38.9	-0.40	0.84	10.30	126.3	182.8	177.8	56.2	182.4	175	74	73	72	0.031	1.001	6.979	882
2367	378.190	377.013		0.16	0.16	1.28	1.03	0.36	84	85	72	2.86	2	77	0.042	102	102	39.1	-0.19	0.88	1.28	126.2	182.7	177.6	56.2	182.4	174	73	73	72	0.030	1.001	7.341	928
2368	378.308	377.173		0.12	0.16	1.28	1.03	0.36	84	85	72	2.86	2	76	0.046	71	97	39.1	-0.03	0.82	5.22	126.1	182.6	177.6	56.2	182.3	172	73	73	72	0.029	1.001	6.807	859
2369	378.469	377.333		0.16	0.16	1.28	1.03	0.36	84	85	72	2.86	2	76	0.043	101	100	38.9	0.20	0.82	9.12	126.0	182.6	177.7	56.2	182.2	170	73	73	72	0.029	1.001	6.806	858
2370	378.574	377.493		0.11	0.16	1.28	1.03	0.36	84	85	72	2.86	2	76	0.040	68	104	38.9	0.05	0.74	8.37	126.1	182.6	177.7	56.1	182.2	168	73	73	72	0.029	1.001	6.158	777
2371	378.700	377.653		0.13	0.16	1.28	1.03	0.36	84	85	72	2.87	2	77	0.044	78	99	38.9	0.01	0.82	5.21	125.9	182.5	177.8	56.1	182.0	166	73	73	72	0.028	1.001	6.807	858
2372	378.861	377.813		0.16	0.16	1.28	1.03	0.36	84	85	72	2.87	2	76	0.044	100	99	39.1	-0.21	0.86	6.48	125.9	182.4	177.4	56.2	182.1	165	73	73	72	0.028	1.001	7.131	899
2373	379.022	377.972		0.16	0.16	1.28	1.03	0.36	84	85	72	2.86	2	77	0.044	100	99	38.7	0.35	0.86	7.19	125.7	182.4	177.2	56.2	181.9	163	73	73	72	0.028	1.001	7.131	898
2374	379.184	378.133		0.16	0.16	1.28	1.03	0.36	84	85	72	2.86	2	76	0.042	103	102	38.8	-0.07	0.80	7.21	125.6	182.2	177.1	56.2	181.8	162	73	73	72	0.027	1.001	6.646	836
2375	379.350	378.292		0.17	0.16	1.28	1.02	0.36	84	85	72	2.86	2	76	0.044	103	98	39.0	-0.19	0.84	5.80	125.5	182.2	177.2	56.2	181.7	160	73	73	72	0.027	1.001	6.967	876
2376	379.460	378.452		0.11	0.16	1.28	1.03	0.36	84	85	72	2.86	2	76	0.040	71	104	38.9	0.04	0.86	10.62	125.5	182.0	176.9	56.2	181.7	158	73	73	72	0.026	1.001	7.129	895
2377	379.505	378.612		0.05	0.16	1.27	1.03	0.36	84	85	72	2.87	2	77	0.041	29	103	38.3	0.69	0.88	6.75	125.4	181.9	177.0	56.2	181.6	157	73	73	72	0.026	1.001	7.296	916
2378	379.631	378.772		0.13	0.16	1.28	1.03	0.36	84	85	72	2.86	2	76	0.042	80	101	38.4	-0.17	0.91	7.76	125.3	181.8	176.7	56.2	181.5	155	73	73	72	0.025	1.001	7.616	955
2379	379.790	378.931		0.16	0.16	1.28	1.03	0.36	84	85	72	2.86	2	76	0.044	98	98	38.5	-0.05	0.82	9.00	125.2	181.8	176.7	56.2	181.3	154	73	73	72	0.026	1.001	6.804	853
2380	379.950	379.092		0.16	0.16	1.28	1.02	0.36	84	85	72	2.85	2	76	0.040	104	105	38.8	-0.36	0.80	10.78	125.2	181.7	176.6	56.1	181.3	152	73	73	72	0.025	1.001	6.645	833
2381	380.109	379.251		0.16	0.16	1.28	1.03	0.36	84	85	72	2.86	2	76	0.043	100	100	39.3	-0.49	0.80	10.34	125.1	181.6	176.4	56.1	181.2	152	73	73	72	0.025	1.001	6.648	832
2382	380.268	379.411		0.16	0.16	1.28	1.03	0.36	84	85	72	2.86	2	76	0.044	98	99	38.7	0.62	0.78	5.98	125.0	181.5	176.3	56.1	181.1	150	73	73	72	0.025	1.001	6.481	811
2383	380.428	379.571		0.16	0.16	1.28	1.03	0.36	84	85	72	2.86	2	76	0.044	99	99	39.0	-0.25	0.86	7.59	124.9	181.4	176.3	56.2	181.0	149	73	73	72	0.024	1.001	7.132	892
2384	380.588	379.731		0.16	0.16	1.28	1.03	0.36	84	85	72	2.86	2	76	0.038	107	107	38.8	0.20	0.84	6.48	124.8	181.3	176.2	56.2	180.9	147	73	73	72	0.023	1.001	6.970	871
2385	380.748	379.890		0.16	0.16	1.28	1.03	0.36	84	85	72	2.86	2	76	0.046	97	96	38.9	-0.10	0.86	8.26	124.8	181.2	176.2	56.1	180.9	147	73	72	72	0.023	1.001	7.135	891
2386	380.908	380.051		0.16	0.16	1.27	1.03	0.36	84	85	72	2.86	2	76	0.044	99	100	38.5	0.38	0.86	7.79	124.6	181.1	176.0	56.1	180.7	146	73	72	72	0.022	1.001	7.134	890
2387	381.067	380.210		0.16	0.16	1.27	1.03	0.36	84	85	72	2.85	2	76	0.043	100	100	38.7	-0.19	0.84	6.58	124.3	181.0	175.8	56.2	180.5	145	72	72	72	0.022	1.001	6.969	867
2388	381.227	380.370		0.16	0.16	1.30	1.04	0.36	84	85	72	2.89	2	76	0.042	101	101	38.1	0.53	0.82	10.38	124.4	181.0	175.9	56.1	180.5	144	72	72	72	0.022	1.001	6.815	849
2389	381.388	380.531		0.16	0.16	1.30	1.04	0.36	84	85	72	2.88	2	76	0.043	101	101	38.3	-0.14	0.86	10.39	124.3	180.8	175.8	56.2	180.4	141	72	72	72	0.022	1.001	7.128	887
2390	381.550	380.691		0.16	0.16	1.29	1.04	0.36	84	85	72	2.88	2	76	0.040	105	104	38.2	0.08	0.82	6.32	124.2	180.7	175.7	56.2	180.4	141	72	72	72	0.021	1.001	6.807	846
2391	381.712	380.852		0.16	0.16	1.29	1.04	0.36	84	85	72	2.89	2	76	0.044	100	100	38.2	0.01	0.87	10.74	124.1	180.7	175.7	56.2	180.3	141	72	72	72	0.020	1.001	7.268	903
2392	381.873	381.013		0.16	0.16	1.30	1.04	0.36	84	85	72	2.89	2	76	0.044	100	100	38.6	-0.42	0.82	6.46	124.0	180.6	175.6	56.2	180.2	140	72	72	72	0.020	1.001	6.808	845
2393	382.029	381.173		0.16	0.16	1.30	1.04	0.36	84	85	72	2.89	2	76	0.045	95	98	38.3	0.29	0.84	8.01	123.9	180.5	175.4	56.2	180.1	138	72	72	72	0.020	1.001	6.971	865
2394	382.130	381.333		0.10	0.16	1.29	1.04	0.36	84	85	72	2.89	2	76	0.042	64	101	38.6	-0.30	0.83	7.80	123.8	180.3	175.4	56.2	179.9	138	72	72	72	0.019	1.001	6.956	862
2395	382.292	381.494		0.16	0.16	1.29	1.04	0.36	84	85	72	2.88	2	76	0.045	99	99	38.5	0.15	0.81	6.83	123.8	180.4	175.4	56.2	179.9	136	72	72	72	0.019	1.001	6.721	833
2396	382.453	381.654		0.16	0.16	1.30	1.03	0.36	84	85	72	2.89	2	76	0.045	99	98	38.7	-0.20	0.82	14.17	123.8	180.2	175.2	56.1	179.9	134	72	72	72	0.019	1.001	6.806	843
2397	382.615	381.814		0.16	0.16	1.30	1.04	0.36	84	85	72	2.88	2	76	0.040	105	104	38.8	-0.17	0.86	9.04	123.5	180.1	175.3	56.1	179.7	135	72	72	72	0.019	1.001	7.135	883
2398	382.776	381.975		0.16	0.16	1.30	1.04	0.36	84	85	72	2.89	2	76	0.045	99	99	38.4	0.49	0.79	10.76	123.5	180.0	175.2	56.2	179.7	133	72	72	72	0.018	1.001	6.616	818
2399	382.939	382.136		0.16	0.16	1.30	1.03	0.36	84	85	72	2.88	2	76	0.043	102	101	39.1	-0.75	0.74	11.52	123.3	179.9	174.9	56.2	179.6	132	72	72	72	0.018	1.001	6.158	760
2400	383.093	382.296		0.15	0.16	1.30	1.04	0.36	84	85	72	2.89	2	76	0.044	95	99	38.6	0.54	0.86	8.37	123.3	179.9	175.0	56.2	179.5	132	72	72	72	0.017	1.001	7.129	880
2401	383.255	382.456		0.16	0.16	1.29	1.04	0.36	84	85	72	2.88	2	76	0.043	101	100	38.3	0.29	0.82	6.48	123.2	179.7	174.8	56.2	179.4	130	72	72	72	0.017	1.001	6.807	840
2402	383.408	382.617		0.15	0.16	1.29	1.04	0.36	84	85	72	2.89	2	76	0.042	97	102	39.0	-0.70	0.78	10.94	123.1	179.6	174.7	56.2	179.3	130	72	72	72	0.017	1.001	6.482	799
2403	383.570	382.777		0.16	0.16	1.30	1.04	0.36	84	85	72	2.88	2	76	0.044	100	99	39.0	-0.01	0.80	8.80	122.9	179.5	174.6	56.3	179.2	130	72	72	72	0.017	1.001	6.645	818
2404	383.719	382.938		0.15	0.16	1.30	1.04	0.36	84	85	72	2.88	2	76	0.046	90	98	38.8	0.18	0.80	10.56	122.8	179.4	174.5	56.3	179.1	129	72	72	72	0.017	1.001	6.644	817
2405	383.883	383.099		0.16	0.16	1.30	1.03	0.36	84	85	72	2.89	2	76	0.045	100	99	38.9	-0.09	0.74	12.96	122.7	179.3	174.4	56.2	179.0	129	72	72	72	0.016	1.001	6.159	757
2406	384.015	383.259		0.13	0.16	1.30	1.03	0.36	84	85	72	2.89	2	76	0.042	84	101	39.0	-0.04	0.78	5.59	122.7	179.2	174.3	56.2	178.9	130	72	72	72	0.016	1.001	6.485	796
2407	384.176	383.419		0.16	0.16	1.30	1.04	0.36	84	85	72	2.88	2	76	0.042	102	101	38.8	0.13	0.86	12.73	122.5	179.2	174.2	56.2	178.7	127	72	72	72	0.016	1.001	7.128	874
2408	384.337	383.580		0.16	0.16	1.30	1.03	0.36	84	85	72	2.88	2	76	0.045	99	99	38.7	0.16	0.84	10.33	122.4	179.0	174.1	56.2	178.7	125	72	72	72	0.015	1.001	6.967	854

Elapsed Time	Particulate Sampling Data																Fuel Weight, lb		Flow, gpm		Temperature Data, oF												
	Gas Meter Cubic Feet (1)	Gas Meter Cubic Feet (2)	Gas Meter Cubic Feet (amb)	Sample Rate, cfm (1)	Sample Rate, cfm (2)	Orifice dH (1)	Orifice dH (2)	Orifice dH (amb)	Meter oF (1)	Meter oF (2)	Meter oF (amb)	Meter Vac. In. Hg. (1)	Meter Vac. In. Hg. (2)	Dilution Tunnel Temp.	Dilution Tunnel dP	Pro. Rate (%) (1)	Pro. Rate (%) (2)	Scale Reading	Weight Change	Load Side Liquid Flow Rate	Boiler Side Liquid Flow Rate (optional)	Thermopile ΔT	Boiler to Heat Exch. Temp.	Heat Exch to Boiler Temp.	Inlet Load Temp.	Outlet Load Temp.	Stack	Filter (1)	Filter (2)	Ambient		Specific Heat of Inlet Water (BTU/lb-°F)	Mass Flow Rate of Inlet Water (lb/min)	Heat Output, Btu
2409	384.498	383.740		0.16	0.16	1.30	1.03	0.36	84	85	72	2.88	2	76	0.044	100	99	38.7	-0.07	0.84	7.78	122.4	179.0	174.2	56.2	178.7	126	72	72	72	0.015	1.001	6.973	855
2410	384.659	383.900		0.16	0.16	1.30	1.04	0.36	84	85	72	2.89	2	76	0.043	101	100	39.0	-0.26	0.82	11.88	122.3	178.8	174.1	56.2	178.5	125	72	72	72	0.015	1.001	6.808	834
2411	384.820	384.061		0.16	0.16	1.30	1.04	0.36	84	85	72	2.89	2	76	0.042	102	102	39.2	-0.23	0.78	11.60	122.2	178.8	174.0	56.2	178.4	126	72	72	72	0.015	1.001	6.481	793
2412	384.981	384.221		0.16	0.16	1.30	1.03	0.36	84	85	72	2.90	2	76	0.044	100	99	38.9	0.31	0.80	7.27	122.0	178.6	173.9	56.2	178.3	124	72	72	72	0.015	1.001	6.648	812
2413	385.142	384.381		0.16	0.16	1.30	1.03	0.36	84	85	72	2.90	2	79	0.038	108	107	39.1	-0.16	0.80	6.53	122.0	178.5	173.8	56.2	178.2	124	72	72	72	0.015	1.001	6.646	811
2414	385.303	384.541		0.16	0.16	1.30	1.04	0.36	84	85	72	2.90	2	79	0.044	100	99	39.2	-0.08	0.80	11.95	121.9	178.5	173.7	56.2	178.1	145	72	72	72	0.039	1.001	6.649	812
2415	385.464	384.702		0.16	0.16	1.29	1.04	0.36	84	85	72	2.89	2	76	0.042	102	102	38.8	0.31	0.80	11.99	121.8	178.4	173.7	56.2	178.1	159	73	72	72	0.022	1.001	6.647	811
2416	385.625	384.862		0.16	0.16	1.30	1.04	0.36	84	85	72	2.89	2	76	0.043	101	100	38.8	0.03	0.84	14.21	121.8	178.3	173.6	56.3	178.0	148	72	72	72	0.019	1.001	6.968	849
2417	385.786	385.023		0.16	0.16	1.30	1.04	0.36	84	85	72	2.89	2	76	0.042	102	102	39.1	-0.28	0.76	12.86	121.5	178.2	173.5	56.3	177.8	141	72	72	72	0.018	1.001	6.325	770
2418	385.947	385.184		0.16	0.16	1.29	1.04	0.36	84	85	72	2.89	2	76	0.043	101	101	38.8	0.34	0.76	12.94	121.5	178.1	173.4	56.3	177.8	137	72	72	72	0.017	1.001	6.335	771
2419	386.108	385.344		0.16	0.16	1.30	1.04	0.36	84	85	72	2.89	2	76	0.043	101	100	38.8	-0.03	0.81	10.13	121.4	178.0	173.3	56.3	177.7	134	72	72	72	0.017	1.001	6.725	817
2420	386.269	385.504		0.16	0.16	1.30	1.04	0.36	84	85	72	2.89	2	76	0.044	100	99	38.7	0.07	0.82	13.02	121.2	177.8	173.2	56.3	177.6	131	72	72	72	0.016	1.001	6.842	831
2421	386.429	385.666		0.16	0.16	1.29	1.04	0.36	84	85	72	2.87	2	75	0.039	105	106	38.5	0.25	0.78	12.07	121.1	177.8	173.3	56.3	177.4	129	72	72	72	0.015	1.001	6.487	786
2422	386.590	385.825		0.16	0.16	1.30	1.03	0.36	84	85	72	2.89	2	75	0.040	104	103	38.5	-0.01	0.80	11.69	121.0	177.6	172.9	56.3	177.4	128	72	72	72	0.015	1.001	6.688	810
2423	386.751	385.986		0.16	0.16	1.30	1.04	0.36	84	85	72	2.87	2	75	0.042	102	102	38.8	-0.27	0.79	15.50	120.9	177.6	172.8	56.4	177.2	127	72	72	72	0.015	1.001	6.547	792
2424	386.912	386.147		0.16	0.16	1.29	1.04	0.36	84	85	72	2.87	2	75	0.041	103	103	38.6	0.20	0.80	13.09	120.7	177.5	172.7	56.4	177.1	126	72	72	72	0.015	1.001	6.628	801
2425	387.073	386.307		0.16	0.16	1.29	1.03	0.36	84	85	72	2.88	2	75	0.043	101	100	38.6	-0.04	0.80	11.34	120.7	177.3	172.6	56.4	177.0	125	72	72	72	0.014	1.001	6.635	802
2426	387.234	386.467		0.16	0.16	1.29	1.04	0.36	84	85	72	2.89	2	75	0.043	101	100	38.9	-0.27	0.74	14.23	120.5	177.3	172.5	56.4	176.9	123	72	72	72	0.014	1.001	6.159	743
2427	387.395	386.628		0.16	0.16	1.29	1.04	0.36	84	85	72	2.88	2	75	0.046	97	97	38.7	0.17	0.82	11.69	120.4	177.1	172.4	56.4	176.8	122	72	72	72	0.014	1.001	6.805	820
2428	387.556	386.789		0.16	0.16	1.30	1.03	0.36	84	85	72	2.88	2	75	0.046	97	97	38.9	-0.18	0.76	12.90	120.3	177.0	172.3	56.4	176.7	121	72	72	72	0.013	1.001	6.323	761
2429	387.716	386.949		0.16	0.16	1.30	1.04	0.36	84	85	72	2.87	2	76	0.043	100	100	38.8	0.07	0.74	14.23	120.1	176.8	172.2	56.4	176.5	121	72	72	72	0.013	1.001	6.161	741
2430	387.877	387.110		0.16	0.16	1.30	1.04	0.36	84	85	72	2.87	2	75	0.041	103	103	38.5	0.26	0.76	14.36	120.1	176.8	172.2	56.4	176.5	120	72	72	72	0.013	1.001	6.317	759
2431	388.038	387.271		0.16	0.16	1.29	1.04	0.36	84	85	72	2.87	2	75	0.045	98	99	39.1	-0.53	0.78	9.05	119.9	176.8	172.1	56.4	176.3	120	72	72	72	0.013	1.001	6.483	778
2432	388.199	387.431		0.16	0.16	1.30	1.04	0.36	84	85	72	2.87	2	75	0.044	100	99	38.8	0.22	0.82	11.64	119.9	176.7	172.0	56.4	176.3	120	72	72	72	0.013	1.001	6.810	817
2433	388.360	387.591		0.16	0.16	1.29	1.04	0.36	84	85	72	2.87	2	76	0.044	100	99	38.5	0.34	0.80	11.61	119.8	176.5	171.9	56.4	176.2	119	72	72	72	0.013	1.001	6.643	797
2434	388.521	387.753		0.16	0.16	1.30	1.04	0.36	84	85	72	2.88	2	75	0.045	98	99	38.9	-0.44	0.76	12.92	119.6	176.3	171.7	56.4	176.0	118	72	72	72	0.012	1.001	6.323	757
2435	388.682	387.913		0.16	0.16	1.30	1.04	0.36	84	85	72	2.88	2	76	0.045	99	98	38.8	0.16	0.80	12.89	119.6	176.3	171.6	56.4	176.0	118	72	72	72	0.012	1.001	6.645	796
2436	388.843	388.073		0.16	0.16	1.30	1.04	0.36	84	85	72	2.88	2	76	0.042	102	101	39.0	-0.24	0.86	10.83	119.4	176.1	171.5	56.4	175.8	117	72	72	72	0.012	1.001	7.134	853
2437	389.003	388.234		0.16	0.16	1.30	1.04	0.36	84	85	72	2.89	2	76	0.041	103	103	38.8	0.26	0.82	11.59	119.3	176.0	171.4	56.4	175.7	116	72	72	72	0.012	1.001	6.813	814
2438	389.164	388.395		0.16	0.16	1.29	1.04	0.36	84	85	72	2.89	2	76	0.042	102	102	38.7	0.11	0.78	12.88	119.1	175.9	171.3	56.4	175.5	117	72	72	72	0.012	1.001	6.482	773
2439	389.324	388.555		0.16	0.16	1.30	1.03	0.36	84	85	72	2.89	2	76	0.043	100	100	39.0	-0.32	0.74	13.08	119.1	175.8	171.2	56.4	175.4	116	72	72	72	0.011	1.001	6.162	735
2440	389.485	388.715		0.16	0.16	1.30	1.04	0.36	84	85	72	2.87	2	76	0.043	101	100	38.7	0.27	0.78	14.20	119.0	175.7	171.2	56.4	175.4	116	72	72	72	0.011	1.001	6.485	773
2441	389.646	388.876		0.16	0.16	1.30	1.04	0.36	84	85	72	2.88	2	76	0.045	99	99	39.0	-0.31	0.80	11.91	118.8	175.6	170.9	56.4	175.2	115	72	72	72	0.011	1.001	6.642	790
2442	389.807	389.036		0.16	0.16	1.30	1.04	0.36	84	85	72	2.88	2	76	0.043	101	100	38.8	0.19	0.78	11.71	118.7	175.4	170.8	56.4	175.1	115	72	72	72	0.011	1.001	6.480	770
2443	389.968	389.197		0.16	0.16	1.30	1.04	0.36	84	85	72	2.88	2	76	0.042	102	102	38.7	0.12	0.80	15.32	118.6	175.3	170.8	56.4	175.0	115	72	72	72	0.011	1.001	6.643	789
2444	390.129	389.358		0.16	0.16	1.29	1.03	0.36	84	85	72	2.89	2	80	0.044	100	100	38.8	-0.15	0.88	14.14	118.5	175.2	170.7	56.4	174.9	116	72	72	72	0.011	1.001	7.295	865
2445	390.289	389.518		0.16	0.16	1.30	1.04	0.36	84	85	72	2.89	2	78	0.042	102	102	38.8	0.08	0.84	11.61	118.3	175.1	170.6	56.4	174.7	136	72	72	72	0.030	1.001	6.968	825
2446	390.450	389.678		0.16	0.16	1.30	1.04	0.36	84	85	72	2.87	2	76	0.043	101	100	38.8	-0.01	0.78	14.22	118.3	175.0	170.5	56.4	174.7	149	72	72	72	0.016	1.001	6.492	769
2447	390.611	389.839		0.16	0.16	1.30	1.04	0.36	84	85	72	2.87	2	76	0.045	99	99	39.3	-0.49	0.87	14.23	118.2	174.9	170.4	56.4	174.6	138	72	72	72	0.015	1.001	7.264	860
2448	390.772	389.999		0.16	0.16	1.30	1.03	0.36	84	85	72	2.88	2	75	0.043	101	100	38.7	0.53	0.77	11.88	118.1	174.8	170.3	56.4	174.5	131	72	72	72	0.014	1.001	6.389	755
2449	390.933	390.159		0.16	0.16	1.30	1.04	0.36	84	85	72	2.88	2	76	0.040	104	104	39.0	-0.27	0.79	15.48	118.0	174.7	170.2	56.4	174.4	127	72	72	72	0.014	1.001	6.602	780
2450	391.095	390.321		0.16	0.16	1.30	1.03	0.36	84	85	72	2.87	2	75	0.044	100	100	38.7	0.30	0.76	14.30	117.8	174.6	170.0	56.4	174.2	123	72	72	72	0.013	1.001	6.362	751
2451	391.256	390.481		0.16	0.16	1.30	1.03	0.36	84	85	72	2.87	2	75	0.043	101	100	38.8	-0.07	0.78	14.18	117.8	174.5	170.0	56.4	174.1	122	72	72	72	0.013	1.001	6.517	768
2452	391.417	390.641		0.16	0.16	1.30	1.04	0.36	84	85	72	2.87	2	75	0.042	102	101	38.7	0.06	0.78	11.79	117.6	174.3	170.1	56.4	174.0	121	72	72	72	0.012	1.001	6.488	764
2453	391.578	390.802		0.16	0.16	1.30	1.04	0.36	84	85	72	2.87	2	75	0.043	101	101	39.2	-0.46	0.84	12.90	117.5	174.3	170.1	56.4	174.0	121	72	72	72	0.013	1.001	6.972	820
2454	391.739	390.963		0.16	0.16	1.30	1.04	0.36	84	85	72	2.88	2	75	0.040	104	104	39.2	0.02	0.74	14.25	117.4	174.1	169.7	56.4	173.8	120	72	72	72	0.012	1.001	6.160	724
2455	391.900	391.123		0.16	0.16	1.30	1.04	0.36	84	85	72	2.89	2	75	0.044	100	99	39.0	0.14	0.74	14.12	117.3	174.1	169.8	56.4	173.7	118	72	72	72	0.012	1.001	6.161	723
2456	392.060	391.284		0.16	0.16	1.30	1.03	0.36	84	85	72	2.87	2	75	0.044	99	100	38.9	0.17	0.76	14.14	117.1	173.8	169.6	56.5	173.5	117	72	72	72	0.012	1.001	6.321	741
2457	392.221	391.445		0.16	0.16	1.30	1.03	0.36	84	85	72	2.88	2	76	0.044	100	100	38.8	0.10	0.82	12.89	117.0	173.8	169.3	56.5	173.5	117	72	72	72	0.011	1.001	6.809	798
2458	392.382	391.605		0.16	0.16	1.30	1.03	0.36	84	85	72	2.87	2	75	0.042	102	101	39.2	-0.43	0.76	14.16	116.9	173.7	169.2	56.5	173.4	117	72	72	72	0.011	1.001	6.321	740
2459	392.543	391.765		0.16	0.16	1.29	1.03	0.36	84	85	72	2.88	2	75	0.043	101	100	38.8	0.35	0.80	14.44	116.7	173.5	169.0	56.5	173.2	116	72	72	72	0.011	1.001	6.647	777
2460	392.704	391.927		0.16	0.16	1.29	1.03	0.36	84	85	72	2.87	2	75	0.041	103	104	38.9	-0.09	0.86	15.54	116.7	173.4	168.9	56.4	173.1	115	72	72	72	0.011	1.001	7.131	833
2461	392.865	392.087		0.16	0.16	1.29	1.03	0.36	84	85	72	2.87	2	75	0.044	100	99	39.0	-0.11	0.80	14.49	116.5	173.3	168.8	56.4	172.9	115	72	72	72	0.011	1.001	6.647	776
2462	393.026	392.247		0.16	0.16	1.29	1.04	0.36	84	85	72	2.87	2	75	0.045	98	98	38.9	0.13	0.80	15.53	116.4	173.1	168.6	56.4	172.8	114	72	72	72	0.011	1.001	6.646	774
2463	393.186	392.408		0.16	0.16	1.29	1.04	0.36	84	85	72	2.88	2	76	0.043	100	101	39.0	-0.04	0.80	15.55	116.3	173.0	168.5	56.4	172.7	114	72	72	72	0.011	1.001	6.645	774
2464	393.347	392.569		0.16	0.16	1.29	1.03	0.36	84	85	72	2.87	2	76	0.045	99	99	39.3	-0.30	0.80	15.51	116.2	172.9	168.3	56.4	172.6	113	72	72	72	0.011	1.001	6.650	774
2465	393.508	392.729		0.16	0.16	1.29	1.04	0.36	84	85	72	2.87	2	76	0.046	97	97	39.1	0.19	0.78	15.50	116.1	172.9	168.4	56.4	172.5	113	72	72	72	0.011	1.001	6.480	753
2466	393.669	392.889		0.16	0.16	1.29	1.03	0.36	84	85	72	2.88	2	76	0.045	99	98	39.3	-0.18	0.78	15.46	116.0	172.7	168.2	56.4	172.4	112	72	72	72	0.010	1.001	6.484	753
2467	393.830	393.051		0.16	0.16	1.30	1.03	0.36	84	85	72	2.87	2	75	0.044	100	100	38.9	0.36	0.78	14.24	115.8	172.5	168.0	56.4	172.2	112	72	72	72	0.010	1.001	6.484	752
2468	393.991	393.211		0.16	0.16	1.29	1.04	0.36	84	85	72	2.88	2	75	0.045	98	98	39.0	-0.13	0.78	15.51	115.7	172.4	167.9	56.4	172.1	112	72	72	72	0.010	1.001	6.484	751
2469	394.152	393.371		0.16	0.16	1.29	1.03	0.36	84	85	72	2.88	2	75	0.042	102	101	38.9	0.13	0.82	15.49	115.7	172.3	167.8	56.4	172.0	111	72	72	72	0.010	1.001	6.808	789
2470	394.313	393.533		0.16	0.16	1.30	1.03	0.36	84	85	72	2.87	2	75	0.045	98	99	39.2	-0.28	0.80	14.27	115.6	172.2	167.8	56.3	171.9	111	72	72	72	0.010	1.001	6.639	768

Elapsed Time	Particulate Sampling Data																	Fuel Weight, lb		Flow, gpm		Temperature Data, oF													
	Gas Meter Cubic Feet (1)	Gas Meter Cubic Feet (2)	Gas Meter Cubic Feet (amb)	Sample Rate, cfm (1)	Sample Rate, cfm (2)	Orifice dH (1)	Orifice dH (2)	Orifice dH (amb)	Meter oF (1)	Meter oF (2)	Meter oF (amb)	Meter Vac. In. Hg. (1)	Meter Vac. In. Hg. (2)	Dilution Tunnel Temp.	Dilution Tunnel dP	Pro. Rate (%) (1)	Pro. Rate (%) (2)	Scale Reading	Weight Change	Load Side Liquid Flow Rate	Boiler Side Liquid Flow Rate (optional)	Thermopile ΔT	Boiler to Heat Exch. Temp.	Heat Exch to Boiler Temp.	Inlet Load Temp.	Outlet Load Temp.	Stack	Filter (1)	Filter (2)	Ambient		Specific Heat of Inlet Water (BTU/lb-°F)	Mass Flow Rate of Inlet Water (lb/min)	Heat Output, Btu
2471	394.473	393.693		0.16	0.16	1.30	1.03	0.36	84	85	72	2.87	2	75	0.044	99	99	39.1	0.09	0.80	15.51	115.5	172.1	167.6	56.3	171.8	112	72	72	72	0.010	1.001	6.653	769
2472	394.634	393.853		0.16	0.16	1.30	1.04	0.36	84	85	72	2.88	2	75	0.043	101	100	39.1	-0.03	0.80	15.47	115.3	171.9	167.5	56.3	171.6	111	72	72	72	0.010	1.001	6.649	767
2473	394.795	394.014		0.16	0.16	1.30	1.04	0.36	84	85	72	2.88	2	75	0.044	100	100	39.0	0.16	0.82	14.17	115.1	171.8	167.4	56.3	171.4	110	72	72	72	0.009	1.001	6.805	784
2474	394.956	394.175		0.16	0.16	1.30	1.03	0.36	84	85	72	2.88	2	75	0.042	102	102	38.8	0.19	0.80	15.47	115.0	171.7	167.4	56.4	171.4	110	72	72	72	0.010	1.001	6.663	767
2475	395.117	394.335		0.16	0.16	1.29	1.03	0.36	84	85	72	2.89	2	79	0.040	105	104	39.3	-0.49	0.78	14.16	114.9	171.6	167.1	56.4	171.3	110	72	72	72	0.010	1.001	6.497	747
2476	395.278	394.495		0.16	0.16	1.30	1.04	0.36	84	85	72	2.87	2	77	0.039	106	105	39.2	0.01	0.83	15.46	114.7	171.4	167.1	56.4	171.1	134	72	72	72	0.024	1.001	6.951	798
2477	395.439	394.657		0.16	0.16	1.30	1.03	0.36	84	85	72	2.87	2	75	0.044	100	100	39.2	0.08	0.79	15.53	114.7	171.3	167.1	56.4	171.0	140	72	72	72	0.014	1.001	6.558	753
2478	395.600	394.817		0.16	0.16	1.29	1.04	0.36	84	85	72	2.88	2	75	0.042	102	101	39.1	0.10	0.85	15.39	114.6	171.3	166.8	56.4	171.0	130	72	72	72	0.012	1.001	7.117	817
2479	395.760	394.977		0.16	0.16	1.29	1.04	0.36	84	85	72	2.87	2	75	0.042	101	101	38.9	0.17	0.82	15.44	114.6	171.2	166.6	56.3	170.9	124	72	72	72	0.012	1.001	6.807	781
2480	395.921	395.139		0.16	0.16	1.30	1.04	0.36	84	85	72	2.88	2	75	0.042	102	103	38.7	0.18	0.82	13.82	114.4	171.0	166.5	56.3	170.7	121	72	72	72	0.012	1.001	6.809	780
2481	396.082	395.298		0.16	0.16	1.30	1.03	0.36	84	85	72	2.88	2	75	0.042	102	101	39.1	-0.38	0.82	13.11	114.3	170.9	166.4	56.3	170.6	118	72	72	72	0.012	1.001	6.809	779
2482	396.243	395.459		0.16	0.16	1.30	1.04	0.36	84	85	72	2.88	2	75	0.039	106	106	39.2	-0.13	0.80	15.51	114.2	170.8	166.4	56.3	170.5	117	72	72	72	0.011	1.001	6.644	759
2483	396.404	395.620		0.16	0.16	1.29	1.04	0.36	84	85	72	2.87	2	75	0.043	101	101	39.2	0.00	0.80	15.49	114.0	170.6	166.1	56.3	170.3	117	72	72	72	0.011	1.001	6.646	758
2484	396.565	395.781		0.16	0.16	1.30	1.03	0.36	84	85	72	2.88	2	75	0.043	101	101	39.2	0.02	0.84	15.39	114.0	170.6	166.1	56.3	170.3	115	72	72	72	0.011	1.001	6.974	796
2485	396.727	395.941		0.16	0.16	1.29	1.04	0.36	84	85	72	2.88	2	75	0.044	100	99	39.2	0.00	0.74	15.46	113.8	170.4	165.9	56.3	170.0	114	72	72	72	0.010	1.001	6.159	702
2486	396.888	396.101		0.16	0.16	1.30	1.04	0.36	84	85	72	2.88	2	75	0.044	100	99	39.1	0.13	0.80	15.44	113.7	170.3	165.8	56.2	170.0	114	72	72	72	0.011	1.001	6.647	757
2487	397.049	396.262		0.16	0.16	1.30	1.04	0.36	84	85	72	2.88	2	75	0.045	98	99	39.0	0.10	0.74	15.48	113.6	170.1	165.7	56.2	169.8	113	72	72	72	0.010	1.001	6.160	701
2488	397.210	396.423		0.16	0.16	1.29	1.03	0.36	84	85	72	2.87	2	75	0.046	97	97	38.8	0.18	0.80	15.51	113.6	170.1	165.7	56.2	169.8	112	72	72	72	0.010	1.001	6.651	756
2489	397.371	396.583		0.16	0.16	1.29	1.03	0.36	84	85	72	2.88	2	75	0.046	97	97	38.9	-0.09	0.88	15.49	113.4	169.9	165.4	56.2	169.6	112	72	72	72	0.011	1.001	7.295	828
2490	397.532	396.744		0.16	0.16	1.29	1.03	0.36	84	85	72	2.87	2	75	0.041	103	103	38.9	0.01	0.86	15.48	113.3	169.8	165.4	56.1	169.5	111	72	72	72	0.010	1.001	7.132	809
2491	397.692	396.904		0.16	0.16	1.30	1.03	0.36	84	85	72	2.88	2	75	0.044	99	99	39.0	-0.06	0.80	15.43	113.2	169.7	165.3	56.1	169.4	111	72	72	72	0.010	1.001	6.651	754
2492	397.853	397.065		0.16	0.16	1.30	1.03	0.36	84	85	72	2.87	2	75	0.043	101	101	39.0	-0.04	0.82	15.51	113.1	169.6	165.1	56.1	169.2	111	72	72	72	0.010	1.001	6.813	772
2493	398.014	397.226		0.16	0.16	1.29	1.04	0.36	84	85	72	2.87	2	75	0.044	100	100	38.9	0.07	0.82	15.46	113.0	169.4	165.0	56.1	169.1	110	72	72	72	0.009	1.001	6.810	770
2494	398.175	397.386		0.16	0.16	1.29	1.03	0.36	84	85	72	2.88	2	75	0.044	100	99	39.1	-0.17	0.78	15.56	112.8	169.3	164.9	56.1	168.9	109	72	72	72	0.010	1.001	6.484	732
2495	398.336	397.546		0.16	0.16	1.30	1.03	0.36	84	85	72	2.87	2	75	0.045	98	98	39.3	-0.20	0.80	15.46	112.7	169.1	164.7	56.1	168.8	109	72	72	72	0.009	1.001	6.649	750
2496	398.497	397.707		0.16	0.16	1.29	1.04	0.36	84	85	72	2.87	2	75	0.045	98	99	39.2	0.05	0.82	15.45	112.6	169.0	164.6	56.1	168.7	109	72	72	72	0.009	1.001	6.812	768
2497	398.658	397.868		0.16	0.16	1.29	1.03	0.36	84	85	72	2.87	2	75	0.042	102	102	39.2	0.01	0.78	15.47	112.5	168.9	164.5	56.1	168.6	109	72	72	72	0.009	1.001	6.484	730
2498	398.818	398.028		0.16	0.16	1.29	1.03	0.36	84	85	72	2.87	2	75	0.043	100	100	39.3	-0.04	0.82	15.48	112.4	168.8	164.4	56.1	168.5	109	72	72	72	0.009	1.001	6.809	766
2499	398.979	398.188		0.16	0.16	1.29	1.03	0.36	84	85	71	2.87	2	75	0.041	103	103	38.8	0.52	0.80	15.55	112.2	168.7	164.3	56.1	168.3	110	72	72	71	0.009	1.001	6.648	747
2500	399.140	398.350		0.16	0.16	1.29	1.03	0.36	84	84	71	2.88	2	75	0.043	101	102	39.1	-0.38	0.80	15.44	112.1	168.5	164.2	56.1	168.2	108	72	72	71	0.009	1.001	6.646	746
2501	399.301	398.510		0.16	0.16	1.29	1.03	0.36	84	85	71	2.87	2	75	0.041	103	103	39.2	-0.06	0.80	15.46	112.0	168.5	164.2	56.1	168.2	107	72	72	71	0.009	1.001	6.666	748
2502	399.462	398.670		0.16	0.16	1.29	1.04	0.36	84	85	71	2.88	2	75	0.041	103	103	39.1	0.10	0.76	15.44	111.8	168.3	163.9	56.1	167.9	107	72	72	71	0.009	1.001	6.325	708
2503	399.623	398.832		0.16	0.16	1.29	1.03	0.36	84	85	71	2.88	2	74	0.039	106	106	39.2	-0.10	0.78	15.57	111.7	168.2	163.9	56.2	167.9	107	72	72	71	0.009	1.001	6.520	729
2504	399.783	398.992		0.16	0.16	1.29	1.03	0.36	84	85	72	2.88	2	74	0.043	100	100	39.2	0.06	0.86	15.48	111.6	168.0	163.7	56.2	167.8	107	72	72	72	0.009	1.001	7.140	798
2505	399.944	399.152		0.16	0.16	1.29	1.04	0.36	84	84	72	2.87	2	75	0.042	102	102	39.1	0.00	0.86	15.55	111.5	168.0	163.7	56.1	167.7	107	72	72	72	0.009	1.001	7.138	797
2506	400.105	399.313		0.16	0.16	1.29	1.03	0.36	84	84	71	2.87	2	79	0.043	101	101	39.2	-0.01	0.85	15.52	111.3	167.8	163.5	56.2	167.5	107	72	71	71	0.009	1.001	7.091	790
2507	400.266	399.474		0.16	0.16	1.30	1.03	0.36	84	84	71	2.86	2	76	0.042	102	102	39.0	0.14	0.76	15.49	111.2	167.7	163.4	56.2	167.4	134	72	72	71	0.024	1.001	6.324	704
2508	400.427	399.634		0.16	0.16	1.29	1.03	0.36	84	84	71	2.88	2	75	0.043	101	100	39.1	-0.12	0.79	15.50	111.1	167.5	163.3	56.1	167.2	135	72	71	71	0.011	1.001	6.585	733
2509	400.588	399.795		0.16	0.16	1.30	1.04	0.36	84	84	71	2.88	2	75	0.044	100	100	39.3	-0.15	0.82	15.53	111.0	167.5	163.2	56.2	167.2	126	72	71	71	0.011	1.001	6.870	764
2510	400.749	399.956		0.16	0.16	1.30	1.04	0.36	84	84	71	2.86	2	75	0.043	101	101	39.2	0.06	0.80	15.46	110.9	167.4	163.1	56.2	167.1	120	72	71	71	0.010	1.001	6.647	738
2511	400.910	400.116		0.16	0.16	1.30	1.04	0.36	84	84	71	2.87	2	75	0.042	102	102	38.9	0.34	0.78	15.42	110.8	167.2	162.9	56.2	166.9	117	72	71	71	0.010	1.001	6.487	719
2512	401.071	400.277		0.16	0.16	1.30	1.03	0.36	84	84	71	2.88	2	75	0.042	102	102	39.0	-0.13	0.80	15.47	110.6	167.1	162.8	56.1	166.8	114	72	71	71	0.010	1.001	6.648	737
2513	401.232	400.438		0.16	0.16	1.30	1.03	0.36	84	84	71	2.88	2	75	0.043	101	101	38.7	0.34	0.76	15.51	110.5	166.9	162.7	56.1	166.7	113	72	71	71	0.010	1.001	6.323	700
2514	401.393	400.598		0.16	0.16	1.30	1.04	0.36	84	84	71	2.88	2	75	0.040	104	104	39.0	-0.33	0.76	15.47	110.5	166.9	162.6	56.1	166.6	113	72	71	71	0.010	1.001	6.329	700
2515	401.553	400.758		0.16	0.16	1.30	1.04	0.36	84	84	71	2.87	2	75	0.042	101	102	39.2	-0.15	0.84	15.45	110.3	166.8	162.7	56.1	166.4	112	72	71	71	0.009	1.001	6.972	770
2516	401.714	400.920		0.16	0.16	1.30	1.04	0.36	84	84	71	2.88	2	75	0.042	102	103	39.0	0.14	0.86	15.60	110.2	166.5	162.3	56.1	166.3	111	71	71	71	0.009	1.001	7.135	787
2517	401.875	401.080		0.16	0.16	1.30	1.03	0.36	84	84	71	2.87	2	75	0.043	101	100	39.2	-0.13	0.80	15.43	110.0	166.4	162.2	56.1	166.2	110	71	71	71	0.009	1.001	6.646	732
2518	402.036	401.241		0.16	0.16	1.30	1.03	0.36	84	84	71	2.87	2	75	0.042	102	102	39.1	0.03	0.80	15.51	109.9	166.4	162.1	56.1	166.0	110	71	71	71	0.009	1.001	6.649	732
2519	402.197	401.401		0.16	0.16	1.30	1.04	0.36	84	84	71	2.87	2	74	0.042	102	101	39.7	-0.60	0.78	15.47	109.8	166.2	162.0	56.1	165.9	109	71	71	71	0.009	1.001	6.485	713
2520	402.358	401.563		0.16	0.16	1.30	1.04	0.36	84	84	71	2.88	2	74	0.044	99	100	39.6	0.11	0.82	15.51	109.7	166.0	161.8	56.1	165.8	108	71	71	71	0.009	1.001	6.812	748
2521	402.519	401.723		0.16	0.16	1.30	1.03	0.36	84	84	71	2.86	2	75	0.041	103	103	38.7	0.89	0.82	15.47	109.7	166.0	161.8	56.0	165.7	108	71	71	71	0.009	1.001	6.812	748
2522	402.681	401.883		0.16	0.16	1.29	1.04	0.36	84	84	71	2.88	2	75	0.041	104	103	38.6	0.14	0.80	15.56	109.5	165.9	161.7	56.1	165.6	108	71	71	71	0.009	1.001	6.647	729
2523	402.842	402.045		0.16	0.16	1.29	1.03	0.36	84	84	71	2.87	2	75	0.045	98	99	38.9	-0.30	0.78	15.52	109.3	165.7	161.5	56.1	165.4	108	71	71	71	0.009	1.001	6.485	710
2524	403.003	402.205		0.16	0.16	1.29	1.03	0.36	84	84	71	2.87	2	74	0.043	101	100	38.9	0.00	0.74	15.52	109.2	165.6	161.4	56.1	165.3	108	71	71	71	0.008	1.001	6.164	674
2525	403.164	402.365		0.16	0.16	1.29	1.04	0.36	84	84	71	2.86	2	75	0.040	104	104	39.2	-0.31	0.80	15.49	109.0	165.4	161.2	56.1	165.1	107	71	71	71	0.008	1.001	6.649	726
2526	403.325	402.526		0.16	0.16	1.29	1.04	0.36	84	84	71	2.88	2	74	0.040	104	105	39.0	0.18	0.86	15.51	109.0	165.4	161.1	56.1	165.1	108	71	71	71	0.009	1.001	7.136	779
2527	403.485	402.687		0.16	0.16	1.29	1.03	0.36	84	84	71	2.86	2	75	0.043	100	101	39.2	-0.16	0.80	15.53	108.8	165.3	161.0	56.1	164.9	107	71	71	71	0.009	1.001	6.650	725
2528	403.646	402.847		0.16	0.16	1.29	1.03	0.36	84	84	71	2.88	2	74	0.042	102	101	39.3	-0.09	0.78	15.44	108.7	165.1	161.1	56.1	164.8	106	71	71	71	0.009	1.001	6.489	706
2529	403.807	403.008		0.16	0.16	1.30	1.04	0.36	84	84	71	2.87	2	75	0.040	104	105	39.2	0.05	0.80	15.40	108.7	165.0	160.8	56.1	164.8	107	71	71	71	0.009	1.001	6.649	723
2530	403.968	403.169		0.16	0.16	1.30	1.03	0.36	84	84	71	2.87	2	74	0.044	99	100	39.4	-0.19	0.78	15.53	108.4	164.8	160.6	56.1	164.6	106	71	71	71	0.009	1.001	6.490	705
2531	404.129	403.329		0.16	0.16	1.30	1.04	0.36	84	84	71	2.88	2	74	0.043	101	100	39.1	0.29	0.84	15.50	108.3	164.7	160.5	56.2	164.5	106	71	71	71	0.008	1.001	6.975	757
2532	404.290	403.490		0.16	0.16	1.29	1.04	0.36	84	84	71	2.87	2	75	0.045	98	99	39.1	-0.02	0.76	15.56	108.2	164.6	160.3	56.1	164.3	107	71	71	71	0.008	1.001	6.373	690

Elapsed Time	Particulate Sampling Data																Fuel Weight, lb		Flow, gpm		Temperature Data, oF												
	Gas Meter Cubic Feet (1)	Gas Meter Cubic Feet (2)	Gas Meter Cubic Feet (amb)	Sample Rate, cfm (1)	Sample Rate, cfm (2)	Orifice dH (1)	Orifice dH (2)	Orifice dH (amb)	Meter oF (1)	Meter oF (2)	Meter oF (amb)	Meter Vac. In. Hg. (1)	Meter Vac. In. Hg. (2)	Dilution Tunnel Temp.	Dilution Tunnel dP	Pro. Rate (%) (1)	Pro. Rate (%) (2)	Scale Reading	Weight Change	Load Side Liquid Flow Rate	Boiler Side Liquid Flow Rate (optional)	Thermopile ΔT	Boiler to Heat Exch. Temp.	Heat Exch to Boiler Temp.	Inlet Load Temp.	Outlet Load Temp.	Stack	Filter (1)	Filter (2)	Ambient		Specific Heat of Inlet Water (BTU/lb-°F)	Mass Flow Rate of Inlet Water (lb/min)	Heat Output, Btu
2533	404.451	403.651		0.16	0.16	1.29	1.03	0.36	84	84	71	2.87	2	75	0.043	101	101	39.3	-0.17	0.76	15.56	108.1	164.5	160.3	56.1	164.2	106	71	71	71	0.008	1.001	6.316	684
2534	404.612	403.811		0.16	0.16	1.29	1.03	0.36	84	84	71	2.86	2	75	0.044	100	99	39.2	0.14	0.70	15.47	108.0	164.4	160.4	56.1	164.1	106	71	71	71	0.008	1.001	5.863	634
2535	404.773	403.972		0.16	0.16	1.29	1.04	0.36	84	84	71	2.87	2	75	0.041	103	103	38.9	0.22	0.78	15.56	107.9	164.3	160.1	56.1	164.0	105	71	71	71	0.008	1.001	6.489	701
2536	404.933	404.133		0.16	0.16	1.29	1.04	0.36	84	84	71	2.88	2	74	0.040	104	105	38.7	0.19	0.79	15.48	107.7	164.1	160.0	56.2	163.9	104	71	71	71	0.008	1.001	6.590	711
2537	405.094	404.293		0.16	0.16	1.29	1.03	0.36	84	84	71	2.88	2	79	0.045	99	98	38.9	-0.20	0.85	15.58	107.6	164.0	159.9	56.2	163.8	105	71	71	71	0.008	1.001	7.093	764
2538	405.255	404.453		0.16	0.16	1.29	1.04	0.36	84	84	71	2.87	2	76	0.045	99	98	39.2	-0.27	0.76	15.50	107.4	163.9	159.6	56.2	163.6	135	71	71	71	0.021	1.001	6.329	681
2539	405.416	404.614		0.16	0.16	1.29	1.04	0.36	84	84	71	2.87	2	75	0.044	100	100	38.7	0.54	0.80	15.43	107.3	163.8	159.6	56.2	163.4	131	71	71	71	0.009	1.001	6.647	714
2540	405.577	404.775		0.16	0.16	1.29	1.03	0.36	84	84	71	2.88	2	74	0.043	101	101	38.9	-0.25	0.78	15.42	107.2	163.7	159.4	56.2	163.4	122	71	71	71	0.009	1.001	6.487	696
2541	405.738	404.935		0.16	0.16	1.29	1.03	0.36	84	84	71	2.88	2	74	0.044	99	99	38.9	0.00	0.82	15.53	107.1	163.5	159.2	56.2	163.3	117	71	71	71	0.009	1.001	6.810	730
2542	405.898	405.096		0.16	0.16	1.29	1.04	0.36	84	84	71	2.85	2	74	0.043	100	101	39.2	-0.27	0.78	15.45	107.1	163.4	159.1	56.2	163.2	114	71	71	71	0.009	1.001	6.487	695
2543	406.058	405.257		0.16	0.16	1.28	1.03	0.36	84	84	71	2.87	2	74	0.046	97	98	38.8	0.36	0.78	15.60	106.9	163.2	158.9	56.1	163.0	112	71	71	71	0.008	1.001	6.491	695
2544	406.219	405.417		0.16	0.16	1.28	1.03	0.36	84	84	71	2.86	2	75	0.044	100	99	39.1	-0.25	0.76	15.50	106.7	163.2	159.0	56.1	162.9	110	71	71	71	0.008	1.001	6.334	677
2545	406.379	405.578		0.16	0.16	1.28	1.04	0.36	84	84	71	2.85	2	75	0.040	104	105	39.2	-0.13	0.89	15.48	106.7	163.1	158.6	56.1	162.8	110	71	71	71	0.009	1.001	7.459	797
2546	406.539	405.739		0.16	0.16	1.29	1.03	0.36	84	84	71	2.85	2	74	0.043	100	101	38.9	0.36	0.84	15.50	106.5	162.9	158.4	56.1	162.7	109	71	71	71	0.008	1.001	6.972	744
2547	406.699	405.899		0.16	0.16	1.28	1.03	0.36	84	84	71	2.86	2	74	0.041	102	103	39.3	-0.40	0.82	15.53	106.4	162.8	158.3	56.1	162.5	108	71	71	71	0.008	1.001	6.822	727
2548	406.860	406.059		0.16	0.16	1.28	1.04	0.36	84	84	71	2.86	2	74	0.041	103	103	39.0	0.25	0.88	15.53	106.3	162.7	158.1	56.1	162.4	107	71	71	71	0.009	1.001	7.302	777
2549	407.020	406.220		0.16	0.16	1.29	1.04	0.36	84	84	71	2.86	2	74	0.045	98	99	38.8	0.17	0.82	15.57	106.2	162.5	158.1	56.1	162.3	108	71	71	71	0.008	1.001	6.816	725
2550	407.181	406.381		0.16	0.16	1.28	1.03	0.36	84	84	71	2.86	2	75	0.041	103	103	39.0	-0.11	0.80	15.48	106.1	162.5	158.0	56.0	162.1	108	71	71	71	0.008	1.001	6.650	707
2551	407.342	406.541		0.16	0.16	1.29	1.03	0.36	84	84	71	2.86	2	74	0.040	104	104	39.2	-0.28	0.78	15.53	106.1	162.3	157.9	56.0	162.1	108	71	71	71	0.008	1.001	6.490	689
2552	407.502	406.702		0.16	0.16	1.28	1.03	0.36	84	84	71	2.87	2	74	0.044	99	100	39.2	0.04	0.84	15.47	105.9	162.1	157.9	56.0	161.9	107	71	71	71	0.008	1.001	6.975	739
2553	407.662	406.863		0.16	0.16	1.28	1.03	0.36	84	84	71	2.86	2	74	0.044	99	100	39.2	-0.02	0.84	15.53	105.8	162.1	157.8	56.0	161.8	107	71	71	71	0.008	1.001	6.979	739
2554	407.823	407.023		0.16	0.16	1.28	1.03	0.36	84	84	71	2.85	2	74	0.044	99	99	39.1	0.16	0.78	15.44	105.7	161.9	157.7	56.0	161.7	106	71	71	71	0.008	1.001	6.487	686
2555	407.983	407.184		0.16	0.16	1.27	1.03	0.36	84	84	71	2.87	2	74	0.041	102	103	39.1	-0.04	0.80	15.50	105.5	161.8	157.5	56.1	161.5	106	71	71	71	0.008	1.001	6.649	702
2556	408.143	407.345		0.16	0.16	1.28	1.03	0.36	84	84	71	2.85	2	74	0.041	102	103	39.1	0.05	0.78	15.44	105.4	161.7	157.4	56.0	161.3	106	71	71	71	0.008	1.001	6.492	685
2557	408.303	407.506		0.16	0.16	1.28	1.03	0.36	84	84	71	2.87	2	74	0.042	101	102	39.2	-0.14	0.82	15.45	105.3	161.5	157.5	56.0	161.3	105	71	71	71	0.008	1.001	6.811	718
2558	408.463	407.666		0.16	0.16	1.28	1.04	0.36	84	84	71	2.85	2	74	0.044	99	99	39.3	-0.11	0.84	15.51	105.1	161.5	157.1	56.0	161.1	105	71	71	71	0.008	1.001	6.971	734
2559	408.623	407.827		0.16	0.16	1.28	1.04	0.36	84	84	71	2.85	2	74	0.043	100	101	39.0	0.27	0.88	15.59	105.1	161.3	157.0	56.0	161.1	104	71	71	71	0.008	1.001	7.301	768
2560	408.784	407.988		0.16	0.16	1.29	1.03	0.36	84	84	71	2.85	2	74	0.042	102	102	38.7	0.38	0.91	15.54	104.9	161.1	156.8	56.0	160.9	104	71	71	71	0.008	1.001	7.620	800
2561	408.944	408.148		0.16	0.16	1.29	1.04	0.36	84	84	71	2.86	2	74	0.038	106	107	39.0	-0.33	0.82	15.44	104.7	161.0	156.8	56.0	160.7	104	71	71	71	0.008	1.001	6.814	714
2562	409.104	408.308		0.16	0.16	1.28	1.04	0.36	84	84	71	2.85	2	74	0.043	100	100	39.2	-0.24	0.80	15.51	104.7	161.0	156.7	56.0	160.7	105	71	71	71	0.008	1.001	6.680	700
2563	409.264	408.470		0.16	0.16	1.28	1.03	0.36	84	84	71	2.87	2	74	0.043	100	101	38.7	0.53	0.80	15.47	104.6	160.8	156.6	55.9	160.5	105	71	71	71	0.008	1.001	6.634	695
2564	409.425	408.630		0.16	0.16	1.29	1.04	0.36	84	84	71	2.85	2	74	0.041	103	103	39.1	-0.37	0.86	15.62	104.4	160.6	156.4	55.9	160.4	105	71	71	71	0.008	1.001	7.141	747
2565	409.585	408.791		0.16	0.16	1.29	1.03	0.36	84	84	71	2.87	2	74	0.043	100	101	38.9	0.19	0.84	15.61	104.3	160.5	156.3	55.9	160.2	105	71	71	71	0.008	1.001	7.018	733
2566	409.745	408.952		0.16	0.16	1.28	1.03	0.36	84	84	71	2.87	2	74	0.044	99	100	39.0	-0.15	0.80	15.47	104.2	160.4	156.2	55.9	160.2	104	71	71	71	0.008	1.001	6.666	696
2567	409.906	409.112		0.16	0.16	1.29	1.03	0.36	84	84	71	2.86	2	74	0.039	106	105	38.7	0.28	0.82	15.49	104.0	160.3	156.1	56.0	160.0	104	71	71	71	0.008	1.001	6.814	710
2568	410.066	409.272		0.16	0.16	1.29	1.04	0.36	84	84	71	2.86	2	77	0.043	100	101	39.3	-0.56	0.82	15.53	103.9	160.1	156.0	55.9	159.9	103	71	71	71	0.008	1.001	6.815	709
2569	410.227	409.433		0.16	0.16	1.29	1.04	0.36	84	84	71	2.85	2	75	0.043	101	101	39.2	0.13	0.81	15.53	103.8	160.0	155.9	56.0	159.8	128	71	71	71	0.017	1.001	6.716	698
2570	410.387	409.594		0.16	0.16	1.28	1.03	0.36	84	84	71	2.86	2	74	0.045	98	99	38.9	0.31	0.80	15.46	103.7	159.9	155.7	55.9	159.6	122	71	71	71	0.008	1.001	6.647	690
2571	410.548	409.754		0.16	0.16	1.28	1.03	0.36	84	84	71	2.85	2	74	0.044	99	99	39.1	-0.22	0.81	15.52	103.5	159.8	155.7	56.1	159.5	116	71	71	71	0.008	1.001	6.768	701
2572	410.708	409.915		0.16	0.16	1.28	1.03	0.36	84	84	71	2.86	2	74	0.041	102	103	39.1	-0.01	0.80	15.53	103.4	159.7	155.5	56.0	159.4	112	71	71	71	0.008	1.001	6.649	688
2573	410.868	410.076		0.16	0.16	1.28	1.03	0.36	84	84	71	2.86	2	74	0.042	101	102	38.8	0.26	0.74	15.50	103.3	159.6	155.4	55.9	159.2	110	71	71	71	0.008	1.001	6.164	638
2574	411.028	410.236		0.16	0.16	1.28	1.04	0.36	84	84	71	2.87	2	81	0.043	101	101	38.3	0.50	0.82	15.45	103.2	159.4	155.5	55.9	159.2	108	71	71	71	0.008	1.001	6.812	704
2575	411.188	410.397		0.16	0.16	1.28	1.04	0.36	84	84	71	2.86	2	84	0.042	102	103	37.7	0.58	0.76	15.50	103.3	159.4	155.6	55.9	159.2	144	71	71	71	0.024	1.001	6.325	654
2576	411.348	410.558		0.16	0.16	1.28	1.04	0.36	84	84	71	2.87	2	87	0.043	101	102	37.2	0.53	0.84	15.48	103.2	159.4	155.2	56.0	159.2	163	71	71	71	0.028	1.001	6.975	721
2577	411.509	410.718		0.16	0.16	1.29	1.03	0.36	84	84	71	2.87	2	90	0.044	101	101	36.5	0.71	0.80	15.51	103.3	159.6	155.3	56.0	159.3	177	72	71	71	0.030	1.001	6.648	687
2578	411.669	410.878		0.16	0.16	1.29	1.04	0.36	84	84	71	2.87	2	92	0.042	103	103	35.6	0.89	0.91	15.56	103.4	159.8	155.5	56.0	159.4	191	72	72	71	0.032	1.001	7.624	790
2579	411.828	411.039		0.16	0.16	1.29	1.04	0.36	84	84	71	2.86	2	94	0.042	102	104	35.0	0.62	0.84	15.50	103.7	160.2	155.8	56.1	159.7	203	72	72	71	0.034	1.001	6.976	724
2580	411.988	411.199		0.16	0.16	1.29	1.04	0.36	84	84	71	2.87	2	97	0.041	105	105	34.3	0.72	0.78	15.54	104.2	160.6	156.3	56.0	160.2	215	72	72	71	0.037	1.001	6.489	677
2581	412.148	411.358		0.16	0.16	1.29	1.04	0.36	84	84	71	2.87	2	99	0.045	100	100	33.5	0.72	0.80	15.52	104.9	161.5	157.1	56.0	160.9	228	73	72	71	0.039	1.001	6.653	698
2582	412.308	411.519		0.16	0.16	1.29	1.04	0.36	84	84	71	2.88	2	101	0.040	106	107	32.8	0.75	0.84	15.41	105.7	162.2	157.8	56.0	161.7	238	73	72	71	0.038	1.001	6.973	738
2583	412.468	411.679		0.16	0.16	1.29	1.03	0.36	84	84	71	2.88	2	103	0.043	103	103	31.9	0.91	0.80	15.51	106.6	163.1	158.6	56.0	162.6	246	73	73	71	0.041	1.001	6.646	709
2584	412.628	411.838		0.16	0.16	1.29	1.04	0.36	84	84	71	2.87	2	104	0.042	104	104	31.2	0.64	0.80	15.51	107.6	164.1	159.5	55.9	163.6	253	74	73	71	0.042	1.001	6.648	716
2585	412.789	411.998		0.16	0.16	1.29	1.03	0.36	84	84	71	2.88	2	105	0.037	112	111	30.2	1.01	0.88	15.49	108.7	165.1	160.5	55.9	164.6	258	74	73	71	0.042	1.001	7.296	794
2586	412.948	412.158		0.16	0.16	1.29	1.03	0.36	84	84	71	2.87	2	106	0.038	109	110	29.4	0.82	0.82	15.61	109.8	166.3	161.8	55.9	165.7	263	74	73	71	0.040	1.001	6.815	749
2587	413.108	412.317		0.16	0.16	1.29	1.03	0.36	84	84	71	2.88	2	107	0.046	100	99	28.8	0.63	0.82	15.57	111.0	167.6	162.9	56.0	167.0	267	74	73	71	0.042	1.001	6.809	757
2588	413.267	412.477		0.16	0.16	1.29	1.03	0.36	84	84	71	2.89	2	108	0.042	104	105	27.6	1.19	0.80	15.46	112.1	168.9	164.1	56.0	168.1	269	75	74	71	0.044	1.001	6.648	746
2589	413.427	412.635		0.16	0.16	1.28	1.02	0.36	84	84	71	2.89	2	109	0.045	101	100	26.7	0.88	0.91	15.51	113.3	170.0	165.2	56.0	169.3	271	75	74	71	0.040	1.001	7.622	865
2590	413.586	412.794		0.16	0.16	1.28	1.02	0.36	84	84	71	2.89	2	109	0.038	109	109	26.2	0.54	0.82	15.49	114.8	171.4	166.6	56.0	170.7	273	75	74	71	0.048	1.001	6.805	782
2591	413.746	412.954		0.16	0.16	1.29	1.02	0.36	84	84	71	2.88	2	109	0.037	111	112	25.6	0.54	0.86	14.23	116.0	172.7	167.8	56.0	172.0	275	75	74	71	0.046	1.001	7.137	829
2592	413.905	413.112		0.16	0.16	1.28	1.02	0.36	84	84	71	2.89	2	110	0.043	103	102	24.3	1.28	0.86	13.51	117.4	174.1	169.1	55.9	173.3	277	76	74	71	0.046	1.001	7.141	840
2593	414.064	413.271		0.16	0.16	1.29	1.03	0.36	84	84	71	2.89	2	111	0.039	108	108	23.6	0.73	0.84	14.19	118.8	175.5	170.4	55.9	174.7	279	76	74	71	0.047	1.001	6.971	829
2594	414.224	413.430		0.16	0.16	1.29	1.02	0.36	84	84	71	2.90	2	111	0.040	107	107	22.5	1.15	0.86	12.92	120.1	176.8	171.8	55.9	176.0	281	76	75	71	0.044	1.001	7.203	866

Elapsed Time	Particulate Sampling Data																Fuel Weight, lb		Flow, gpm		Temperature Data, oF												
	Gas Meter Cubic Feet (1)	Gas Meter Cubic Feet (2)	Gas Meter Cubic Feet (amb)	Sample Rate, cfm (1)	Sample Rate, cfm (2)	Orifice dH (1)	Orifice dH (2)	Orifice dH (amb)	Meter oF (1)	Meter oF (2)	Meter oF (amb)	Meter Vac. In. Hg. (1)	Meter Vac. In. Hg. (2)	Dilution Tunnel Temp.	Dilution Tunnel dP	Pro. Rate (%) (1)	Pro. Rate (%) (2)	Scale Reading	Weight Change	Load Side Liquid Flow Rate	Boiler Side Liquid Flow Rate (optional)	Thermopile ΔT	Boiler to Heat Exch. Temp.	Heat Exch to Boiler Temp.	Inlet Load Temp.	Outlet Load Temp.	Stack	Filter (1)	Filter (2)	Ambient		Specific Heat of Inlet Water (BTU/lb-°F)	Mass Flow Rate of Inlet Water (lb/min)	Heat Output, Btu
2595	414.383	413.588		0.16	0.16	1.28	1.02	0.36	84	84	71	2.89	2	111	0.041	105	105	21.3	1.21	0.75	12.98	121.6	178.3	173.3	55.9	177.6	283	76	75	71	0.049	1.001	6.221	757
2596	414.543	413.748		0.16	0.16	1.29	1.02	0.36	84	84	71	2.89	2	112	0.039	109	109	20.6	0.61	0.82	10.28	122.9	179.6	174.6	56.0	178.9	285	76	75	71	0.043	1.001	6.821	840
2597	414.703	413.906		0.16	0.16	1.28	1.02	0.36	84	84	71	2.90	2	112	0.040	107	106	20.0	0.66	0.87	9.11	124.2	181.0	175.8	56.0	180.2	286	77	75	71	0.049	1.001	7.286	906
2598	414.862	414.065		0.16	0.16	1.28	1.02	0.36	84	84	71	2.91	2	113	0.040	107	107	19.9	0.08	0.84	9.05	125.6	182.2	177.1	56.0	181.6	288	77	75	71	0.048	1.001	6.973	877
2599	415.021	414.224		0.16	0.16	1.28	1.02	0.36	84	84	71	2.88	2	93	0.037	109	109	19.1	0.79	0.82	5.18	126.2	182.7	177.7	56.0	182.2	289	77	75	71	0.047	1.001	6.812	860
2600	415.180	414.383		0.16	0.16	1.27	1.02	0.36	84	84	71	2.88	2	87	0.041	103	103	19.6	-0.51	0.82	6.49	126.7	183.1	178.2	56.1	182.7	266	77	75	71	0.035	1.001	6.811	864
2601	415.340	414.542		0.16	0.16	1.28	1.02	0.36	84	84	71	2.87	2	84	0.039	106	106	19.1	0.52	0.74	5.56	127.0	183.4	178.3	56.0	183.0	244	76	75	71	0.034	1.001	6.178	785
2602	415.500	414.702		0.16	0.16	1.28	1.02	0.36	84	84	71	2.89	2	83	0.041	103	104	19.3	-0.16	0.78	2.81	127.2	183.6	178.6	56.0	183.2	231	76	75	71	0.033	1.001	6.491	826
2603	415.659	414.861		0.16	0.16	1.27	1.02	0.36	84	84	71	2.88	2	80	0.044	99	99	19.2	0.06	0.74	4.45	127.4	183.8	178.8	56.0	183.4	222	75	75	71	0.030	1.001	6.164	786
2604	415.819	415.020		0.16	0.16	1.28	1.02	0.36	84	84	71	2.88	2	78	0.044	99	99	18.8	0.41	0.84	8.33	127.4	183.9	178.8	56.1	183.5	218	75	74	71	0.031	1.001	6.970	889
2605	415.979	415.180		0.16	0.16	1.28	1.01	0.36	84	84	71	2.87	2	78	0.046	97	97	18.7	0.14	0.80	1.09	127.6	184.0	178.9	56.0	183.6	215	75	74	71	0.031	1.001	6.651	849
2606	416.139	415.339		0.16	0.16	1.28	1.02	0.36	84	84	71	2.88	2	78	0.041	103	102	18.6	0.10	0.80	2.43	127.6	184.0	179.1	56.1	183.7	211	75	74	71	0.030	1.001	6.647	849
2607	416.299	415.499		0.16	0.16	1.27	1.02	0.36	84	84	71	2.88	2	77	0.043	100	101	18.9	-0.36	0.80	4.09	127.7	184.1	179.2	56.1	183.7	209	75	74	71	0.030	1.001	6.649	850
2608	416.459	415.658		0.16	0.16	1.28	1.02	0.36	84	84	71	2.87	2	77	0.045	98	98	18.7	0.21	0.80	2.38	127.7	184.2	179.3	56.1	183.8	206	74	74	71	0.029	1.001	6.647	850
2609	416.619	415.817		0.16	0.16	1.28	1.02	0.36	84	84	71	2.88	2	76	0.044	99	99	18.6	0.11	0.80	4.27	127.7	184.2	179.2	56.1	183.8	203	74	74	71	0.029	1.001	6.651	850
2610	416.779	415.978		0.16	0.16	1.28	1.02	0.36	84	84	71	2.87	2	76	0.046	97	98	18.5	0.06	0.80	4.44	127.8	184.2	179.3	56.0	183.9	202	74	74	71	0.027	1.001	6.649	851
2611	416.939	416.136		0.16	0.16	1.27	1.02	0.36	84	84	71	2.87	2	76	0.044	99	98	18.6	-0.06	0.72	3.51	127.8	184.2	179.3	56.0	183.8	200	74	74	71	0.027	1.001	6.001	768
2612	417.099	416.296		0.16	0.16	1.27	1.02	0.36	84	84	71	2.87	2	75	0.040	104	104	18.4	0.22	0.78	4.15	127.8	184.2	179.3	56.0	183.8	198	74	74	71	0.026	1.001	6.486	830
2613	417.259	416.456		0.16	0.16	1.27	1.02	0.36	84	84	71	2.87	2	75	0.041	102	103	18.6	-0.23	0.80	6.46	127.8	184.2	179.3	56.0	183.8	196	74	74	71	0.026	1.001	6.651	851
2614	417.418	416.615		0.16	0.16	1.28	1.02	0.36	84	84	71	2.87	2	75	0.039	104	105	18.6	-0.01	0.80	6.05	127.7	184.2	179.3	56.0	183.8	194	74	73	71	0.026	1.001	6.649	850
2615	417.578	416.775		0.16	0.16	1.27	1.02	0.36	84	84	71	2.87	2	75	0.043	100	100	18.3	0.29	0.80	4.93	127.7	184.1	179.3	56.0	183.8	191	73	73	71	0.025	1.001	6.650	850
2616	417.738	416.935		0.16	0.16	1.28	1.02	0.36	84	84	71	2.86	2	75	0.039	105	105	18.5	-0.20	0.74	3.19	127.7	184.1	179.4	56.1	183.8	188	73	73	71	0.025	1.001	6.166	788
2617	417.898	417.094		0.16	0.16	1.28	1.02	0.36	84	84	71	2.86	2	75	0.042	101	101	18.7	-0.21	0.78	7.60	127.7	184.2	179.5	56.1	183.8	185	73	73	71	0.025	1.001	6.492	830
2618	418.058	417.254		0.16	0.16	1.28	1.02	0.36	84	84	71	2.87	2	75	0.044	99	99	18.5	0.22	0.78	2.67	127.6	184.0	179.3	56.1	183.7	183	73	73	71	0.025	1.001	6.487	829
2619	418.218	417.414		0.16	0.16	1.28	1.02	0.36	84	84	71	2.88	2	75	0.045	98	98	19.0	-0.52	0.80	4.72	127.5	184.0	179.3	56.1	183.6	181	73	73	71	0.025	1.001	6.649	849
2620	418.377	417.573		0.16	0.16	1.28	1.02	0.36	84	84	71	2.87	2	75	0.045	97	97	18.6	0.44	0.78	3.90	127.4	183.9	179.3	56.2	183.6	178	73	73	71	0.024	1.001	6.473	826
2621	418.538	417.733		0.16	0.16	1.28	1.02	0.36	84	84	71	2.88	2	75	0.042	102	102	18.6	-0.02	0.71	6.56	127.3	183.9	179.3	56.2	183.5	176	73	73	71	0.024	1.001	5.906	753
2622	418.698	417.894		0.16	0.16	1.27	1.02	0.36	84	84	71	2.87	2	75	0.042	101	102	19.0	-0.36	0.82	3.92	127.3	183.9	179.3	56.2	183.5	175	73	73	71	0.024	1.001	6.799	867
2623	418.859	418.053		0.16	0.16	1.28	1.02	0.36	84	84	71	2.87	2	75	0.042	102	101	18.5	0.46	0.75	5.22	127.2	183.8	179.2	56.2	183.5	173	73	73	71	0.023	1.001	6.250	796
2624	419.019	418.212		0.16	0.16	1.28	1.02	0.36	84	84	71	2.88	2	75	0.042	101	101	18.7	-0.17	0.76	4.25	127.2	183.7	179.1	56.2	183.4	170	73	73	71	0.023	1.001	6.322	805
2625	419.178	418.372		0.16	0.16	1.28	1.02	0.36	84	84	71	2.87	2	75	0.044	98	99	19.0	-0.32	0.78	6.24	127.1	183.7	179.0	56.2	183.3	168	72	72	71	0.023	1.001	6.489	825
2626	419.338	418.532		0.16	0.16	1.28	1.02	0.36	84	84	71	2.88	2	75	0.046	97	97	18.6	0.40	0.74	6.81	127.0	183.7	179.1	56.3	183.2	166	72	72	71	0.022	1.001	6.164	784
2627	419.498	418.691		0.16	0.16	1.27	1.02	0.36	84	84	71	2.88	2	75	0.045	98	97	18.6	0.02	0.74	5.97	126.9	183.6	179.0	56.3	183.2	164	72	72	71	0.022	1.001	6.163	783
2628	419.658	418.852		0.16	0.16	1.28	1.02	0.36	84	84	71	2.87	2	74	0.044	99	100	18.6	0.02	0.86	6.65	126.8	183.5	178.9	56.3	183.2	162	72	72	71	0.021	1.001	7.137	906
2629	419.818	419.011		0.16	0.16	1.28	1.02	0.36	84	84	71	2.87	2	75	0.040	104	103	18.5	0.04	0.66	4.16	126.7	183.4	179.1	56.3	183.1	161	72	72	71	0.021	1.001	5.515	700
2630	419.978	419.170		0.16	0.16	1.28	1.02	0.36	84	84	71	2.88	2	75	0.041	102	102	18.6	-0.06	0.72	4.16	126.6	183.4	178.7	56.3	183.0	159	72	72	71	0.021	1.001	6.000	761
2631	420.138	419.331		0.16	0.16	1.28	1.02	0.36	84	84	71	2.87	2	75	0.044	99	100	18.9	-0.36	0.78	5.97	126.6	183.3	178.7	56.4	183.0	158	72	72	71	0.021	1.001	6.489	822
2632	420.297	419.490		0.16	0.16	1.28	1.02	0.36	84	84	71	2.88	2	75	0.044	98	99	18.4	0.51	0.80	3.92	126.6	183.3	178.7	56.4	182.9	156	72	72	71	0.020	1.001	6.650	843
2633	420.457	419.650		0.16	0.16	1.28	1.02	0.36	84	84	71	2.88	2	74	0.042	101	101	18.7	-0.22	0.78	5.72	126.4	183.1	178.6	56.3	182.8	154	72	72	71	0.020	1.001	6.489	821
2634	420.617	419.810		0.16	0.16	1.28	1.02	0.36	84	84	71	2.88	2	74	0.043	100	100	18.6	0.09	0.74	5.42	126.4	183.1	178.5	56.3	182.7	152	72	72	71	0.019	1.001	6.166	780
2635	420.777	419.969		0.16	0.16	1.28	1.02	0.36	84	84	71	2.88	2	75	0.044	99	99	18.6	-0.03	0.74	4.66	126.2	182.9	178.3	56.4	182.6	151	72	72	71	0.019	1.001	6.168	779
2636	420.938	420.129		0.16	0.16	1.28	1.02	0.36	84	84	71	2.88	2	75	0.045	98	98	18.9	-0.28	0.76	7.74	126.1	182.9	178.3	56.4	182.5	150	72	72	71	0.018	1.001	6.326	799
2637	421.098	420.289		0.16	0.16	1.28	1.02	0.36	84	84	71	2.86	2	75	0.042	101	102	18.3	0.59	0.74	9.49	126.1	182.8	178.3	56.4	182.4	148	72	72	71	0.019	1.001	6.165	778
2638	421.258	420.448		0.16	0.16	1.27	1.02	0.36	84	84	71	2.87	2	75	0.042	101	101	18.7	-0.46	0.74	6.21	126.0	182.7	178.1	56.4	182.4	147	72	72	71	0.018	1.001	6.161	777
2639	421.418	420.608		0.16	0.16	1.28	1.02	0.36	84	84	71	2.88	2	75	0.045	98	98	18.7	0.07	0.70	5.19	125.9	182.6	178.1	56.4	182.3	146	72	72	71	0.018	1.001	5.840	736
2640	421.578	420.768		0.16	0.16	1.28	1.02	0.36	84	84	71	2.87	2	75	0.044	99	99	18.5	0.17	0.76	6.00	125.7	182.6	178.0	56.4	182.1	144	72	72	71	0.018	1.001	6.330	797
2641	421.738	420.927		0.16	0.16	1.28	1.02	0.36	84	84	71	2.87	2	74	0.043	100	100	18.7	-0.20	0.74	9.00	125.7	182.4	177.9	56.4	182.1	143	71	72	71	0.017	1.001	6.166	776
2642	421.898	421.087		0.16	0.16	1.27	1.02	0.36	84	84	71	2.87	2	75	0.042	101	102	18.8	-0.08	0.74	8.85	125.6	182.3	177.8	56.4	182.0	142	71	72	71	0.017	1.001	6.165	775
2643	422.058	421.247		0.16	0.16	1.28	1.02	0.36	84	84	71	2.87	2	74	0.042	101	101	19.0	-0.19	0.72	5.19	125.5	182.2	177.8	56.4	181.9	140	71	71	71	0.017	1.001	6.012	755
2644	422.218	421.406		0.16	0.16	1.28	1.02	0.36	84	84	71	2.86	2	74	0.042	101	101	18.3	0.69	0.74	5.98	125.4	182.1	177.7	56.4	181.8	139	71	71	71	0.017	1.001	6.171	775
2645	422.378	421.567		0.16	0.16	1.28	1.02	0.36	84	84	71	2.86	2	74	0.041	102	103	18.6	-0.35	0.63	4.79	125.3	182.1	177.5	56.4	181.7	139	71	71	71	0.017	1.001	5.241	657
2646	422.538	421.727		0.16	0.16	1.28	1.02	0.36	84	84	71	2.87	2	74	0.042	101	101	18.8	-0.18	0.74	5.22	125.2	182.0	177.5	56.4	181.6	138	71	71	71	0.017	1.001	6.137	769
2647	422.697	421.886		0.16	0.16	1.28	1.02	0.36	84	84	71	2.87	2	74	0.043	99	100	19.1	-0.25	0.78	7.79	125.1	181.9	177.4	56.4	181.5	137	71	71	71	0.016	1.001	6.490	813
2648	422.858	422.046		0.16	0.16	1.28	1.02	0.36	84	84	71	2.88	2	74	0.038	107	107	18.6	0.44	0.72	6.02	125.0	181.8	177.3	56.5	181.5	136	71	71	71	0.016	1.001	6.003	751
2649	423.018	422.206		0.16	0.16	1.28	1.02	0.36	84	84	71	2.88	2	74	0.044	99	99	19.0	-0.34	0.73	8.06	125.0	181.7	177.3	56.4	181.4	135	71	71	71	0.016	1.001	6.054	757
2650	423.178	422.365		0.16	0.16	1.28	1.02	0.36	84	84	71	2.86	2	74	0.041	102	102	18.5	0.43	0.75	8.42	124.9	181.7	177.2	56.4	181.3	134	71	71	71	0.015	1.001	6.289	787
2651	423.338	422.526		0.16	0.16	1.28	1.02	0.36	84	84	71	2.88	2	75	0.044	99	100	18.9	-0.35	0.72	7.91	124.8	181.6	177.3	56.4	181.2	133	71	71	71	0.016	1.001	6.004	750
2652	423.498	422.685		0.16	0.16	1.28	1.02	0.36	84	84	71	2.88	2	74	0.044	99	98	18.9	-0.01	0.76	12.74	124.7	181.5	177.0	56.4	181.1	133	71	71	71	0.015	1.001	6.368	795
2653	423.659	422.845		0.16	0.16	1.28	1.03	0.36	84	84	71	2.86	2	74	0.042	102	101	18.6	0.24	0.72	8.37	124.6	181.4	177.0	56.4	181.0	132	71	71	71	0.015	1.001	6.006	749
2654	423.819	423.005		0.16	0.16	1.28	1.02	0.36	84	84	71	2.86	2	74	0.043	100	100	18.8	-0.18	0.72	4.84	124.5	181.3	176.9	56.4	180.9	131	71	71	71	0.015	1.001	6.006	749
2655	423.978	423.165		0.16	0.16	1.28	1.02	0.36	84	84	71	2.88	2	74	0.040	103	104	18.9	-0.07	0.76	7.80	124.4	181.2	176.8	56.4	180.8	130	71	71	71	0.015	1.001	6.333	789
2656	424.139	423.324		0.16	0.16	1.28	1.03	0.36	84	84	71	2.88	2	74	0.043	101	100	19.5	-0.60	0.74	3.14	124.3	181.2	176.8	56.4	180.8	129	71	71	71	0.015	1.001	6.170	768

Elapsed Time	Particulate Sampling Data																	Fuel Weight, lb		Flow, gpm		Temperature Data, oF													
	Gas Meter Cubic Feet (1)	Gas Meter Cubic Feet (2)	Gas Meter Cubic Feet (amb)	Sample Rate, cfm (1)	Sample Rate, cfm (2)	Orifice dH (1)	Orifice dH (2)	Orifice dH (amb)	Meter oF (1)	Meter oF (2)	Meter oF (amb)	Meter Vac. In. Hg. (1)	Meter Vac. In. Hg. (2)	Dilution Tunnel Temp.	Dilution Tunnel dP	Pro. Rate (%) (1)	Pro. Rate (%) (2)	Scale Reading	Weight Change	Load Side Liquid Flow Rate	Boiler Side Liquid Flow Rate (optional)	Thermopile ΔT	Boiler to Heat Exch. Temp.	Heat Exch to Boiler Temp.	Inlet Load Temp.	Outlet Load Temp.	Stack	Filter (1)	Filter (2)	Ambient		Specific Heat of Inlet Water (BTU/lb-°F)	Mass Flow Rate of Inlet Water (lb/min)	Heat Output, Btu
2657	424.299	423.484		0.16	0.16	1.27	1.02	0.36	84	84	71	2.87	2	74	0.041	102	103	19.1	0.44	0.78	8.41	124.2	181.1	176.6	56.4	180.7	128	71	71	71	0.015	1.001	6.491	807
2658	424.459	423.644		0.16	0.16	1.27	1.02	0.36	84	84	71	2.86	2	74	0.047	96	96	18.8	0.28	0.70	5.29	124.2	181.0	176.5	56.4	180.6	128	71	71	71	0.014	1.001	5.849	728
2659	424.618	423.803		0.16	0.16	1.28	1.02	0.36	84	84	71	2.87	2	74	0.042	101	101	18.9	-0.12	0.76	9.27	124.0	180.8	176.4	56.4	180.4	127	71	71	71	0.014	1.001	6.329	786
2660	424.778	423.964		0.16	0.16	1.28	1.02	0.36	84	84	71	2.86	2	74	0.043	100	101	19.1	-0.15	0.80	7.67	124.0	180.7	176.3	56.4	180.4	127	71	71	71	0.014	1.001	6.654	826
2661	424.938	424.123		0.16	0.16	1.28	1.02	0.36	84	84	71	2.87	2	74	0.043	100	100	18.9	0.15	0.72	7.73	123.9	180.7	176.3	56.4	180.3	126	71	71	71	0.015	1.001	6.003	745
2662	425.098	424.283		0.16	0.16	1.28	1.03	0.36	84	84	71	2.87	2	74	0.042	101	101	18.9	0.04	0.80	7.75	123.8	180.5	176.2	56.4	180.2	125	71	71	71	0.014	1.001	6.653	824
2663	425.258	424.443		0.16	0.16	1.29	1.02	0.36	84	84	71	2.88	2	74	0.042	101	101	18.9	-0.07	0.72	7.74	123.7	180.4	176.1	56.4	180.1	125	71	71	71	0.014	1.001	6.005	744
2664	425.418	424.602		0.16	0.16	1.28	1.02	0.36	84	84	71	2.88	2	74	0.045	98	97	19.1	-0.19	0.78	8.39	123.7	180.3	176.0	56.3	180.0	126	71	71	71	0.014	1.001	6.495	804
2665	425.578	424.762		0.16	0.16	1.28	1.02	0.36	84	84	71	2.88	2	74	0.045	98	98	19.2	-0.08	0.74	9.09	123.6	180.2	175.9	56.3	179.9	124	71	71	71	0.014	1.001	6.166	763
2666	425.738	424.923		0.16	0.16	1.28	1.02	0.36	84	84	71	2.86	2	74	0.042	101	102	18.9	0.30	0.80	10.31	123.5	180.1	175.7	56.3	179.8	123	71	71	71	0.014	1.001	6.651	822
2667	425.899	425.082		0.16	0.16	1.28	1.02	0.36	84	84	71	2.88	2	74	0.042	102	101	19.6	-0.72	0.74	7.23	123.4	180.1	175.7	56.3	179.7	123	71	71	71	0.014	1.001	6.169	762
2668	426.059	425.241		0.16	0.16	1.27	1.02	0.36	84	84	71	2.88	2	74	0.043	100	100	19.3	0.30	0.74	10.17	123.4	180.0	175.6	56.3	179.6	122	71	71	71	0.014	1.001	6.168	762
2669	426.219	425.402		0.16	0.16	1.27	1.02	0.36	84	84	71	2.88	2	82	0.042	102	103	19.0	0.32	0.72	7.68	123.3	179.8	175.5	56.3	179.5	122	71	71	71	0.014	1.001	6.009	742
2670	426.379	425.561		0.16	0.16	1.29	1.03	0.36	84	84	71	2.86	2	76	0.044	99	99	18.9	0.13	0.72	6.58	123.1	179.8	175.4	56.3	179.4	150	71	71	71	0.035	1.001	6.007	741
2671	426.539	425.721		0.16	0.16	1.28	1.03	0.36	84	84	71	2.86	2	74	0.042	101	101	19.1	-0.22	0.81	7.80	123.1	179.8	175.4	56.3	179.4	158	71	71	71	0.018	1.001	6.779	836
2672	426.699	425.882		0.16	0.16	1.28	1.02	0.36	84	84	71	2.86	2	74	0.042	101	102	18.9	0.15	0.74	11.54	123.1	179.6	175.3	56.3	179.3	145	71	71	71	0.016	1.001	6.168	760
2673	426.859	426.042		0.16	0.16	1.28	1.02	0.36	84	84	71	2.86	2	74	0.043	100	100	18.9	0.04	0.66	7.15	123.0	179.7	175.5	56.3	179.2	138	71	71	71	0.016	1.001	5.518	679
2674	427.019	426.202		0.16	0.16	1.28	1.03	0.36	83	84	71	2.86	2	74	0.044	99	99	19.2	-0.32	0.76	6.01	122.9	179.5	175.3	56.3	179.2	133	71	71	71	0.015	1.001	6.331	779
2675	427.179	426.362		0.16	0.16	1.28	1.03	0.36	84	84	71	2.86	2	74	0.043	100	100	19.0	0.20	0.74	11.65	122.8	179.4	175.1	56.3	179.0	131	71	71	71	0.015	1.001	6.168	758
2676	427.339	426.523		0.16	0.16	1.28	1.03	0.36	84	84	71	2.87	2	74	0.043	100	101	19.0	0.06	0.74	12.86	122.7	179.3	175.0	56.2	179.0	128	71	71	71	0.015	1.001	6.168	758
2677	427.499	426.682		0.16	0.16	1.28	1.03	0.36	84	84	71	2.87	2	74	0.041	102	102	19.4	-0.42	0.74	8.57	122.6	179.2	174.9	56.2	178.8	127	71	71	71	0.014	1.001	6.170	757
2678	427.659	426.843		0.16	0.16	1.28	1.03	0.36	84	84	71	2.86	2	74	0.044	99	100	19.0	0.38	0.74	9.95	122.4	179.1	174.8	56.3	178.7	126	71	71	71	0.014	1.001	6.170	756
2679	427.820	427.003		0.16	0.16	1.29	1.02	0.36	84	84	71	2.86	2	74	0.044	99	99	18.9	0.07	0.76	12.89	122.3	179.0	174.7	56.3	178.6	124	71	71	71	0.013	1.001	6.340	777
2680	427.980	427.163		0.16	0.16	1.28	1.03	0.36	84	84	71	2.87	2	74	0.044	99	99	19.0	-0.06	0.74	8.33	122.2	178.8	174.6	56.3	178.5	123	71	71	71	0.013	1.001	6.174	755
2681	428.140	427.323		0.16	0.16	1.28	1.03	0.36	84	84	71	2.87	2	74	0.039	105	105	18.7	0.26	0.72	11.58	122.1	178.8	174.5	56.3	178.5	123	71	71	71	0.013	1.001	6.007	735
2682	428.300	427.484		0.16	0.16	1.28	1.03	0.36	84	84	71	2.86	2	74	0.046	97	98	18.9	-0.17	0.76	10.18	122.0	178.7	174.4	56.3	178.4	121	71	71	71	0.013	1.001	6.332	774
2683	428.461	427.644		0.16	0.16	1.29	1.03	0.36	84	84	71	2.87	2	75	0.042	102	102	19.3	-0.38	0.74	10.77	121.9	178.6	174.4	56.3	178.2	121	71	71	71	0.012	1.001	6.168	753
2684	428.621	427.804		0.16	0.16	1.28	1.03	0.36	84	84	71	2.87	2	74	0.043	100	100	19.2	0.09	0.72	10.33	121.8	178.5	174.3	56.3	178.2	121	71	71	71	0.012	1.001	6.003	732
2685	428.782	427.965		0.16	0.16	1.29	1.03	0.36	84	84	71	2.87	2	74	0.042	102	102	18.9	0.28	0.72	12.13	121.7	178.3	174.1	56.3	178.0	121	71	71	71	0.013	1.001	6.005	732
2686	428.942	428.125		0.16	0.16	1.29	1.03	0.36	84	84	71	2.87	2	74	0.043	100	100	18.9	0.04	0.78	11.62	121.6	178.3	174.0	56.3	177.9	121	71	71	71	0.012	1.001	6.495	791
2687	429.102	428.285		0.16	0.16	1.28	1.03	0.36	84	84	71	2.86	2	74	0.041	102	103	19.4	-0.47	0.74	11.61	121.5	178.1	173.9	56.3	177.8	120	71	71	71	0.012	1.001	6.169	751
2688	429.262	428.446		0.16	0.16	1.28	1.03	0.36	84	84	71	2.87	2	74	0.042	101	102	19.0	0.35	0.72	9.06	121.4	178.1	173.8	56.3	177.7	119	71	71	71	0.012	1.001	6.001	730
2689	429.422	428.606		0.16	0.16	1.28	1.03	0.36	84	84	71	2.86	2	74	0.043	100	100	19.4	-0.36	0.74	9.22	121.3	177.9	173.7	56.3	177.6	120	71	71	71	0.012	1.001	6.165	749
2690	429.582	428.766		0.16	0.16	1.28	1.03	0.36	84	84	71	2.87	2	74	0.042	101	101	19.2	0.17	0.76	9.60	121.3	177.9	173.6	56.3	177.5	119	71	71	71	0.012	1.001	6.329	768
2691	429.742	428.927		0.16	0.16	1.28	1.03	0.36	84	84	71	2.87	2	74	0.042	101	102	19.4	-0.25	0.76	8.43	121.1	177.8	173.5	56.3	177.4	119	71	71	71	0.012	1.001	6.330	768
2692	429.902	429.087		0.16	0.16	1.28	1.03	0.36	84	84	71	2.86	2	74	0.041	102	103	19.2	0.20	0.74	9.12	121.0	177.6	173.3	56.3	177.2	118	71	71	71	0.012	1.001	6.168	747
2693	430.062	429.247		0.16	0.16	1.28	1.03	0.36	84	84	71	2.87	2	74	0.043	100	100	19.3	-0.09	0.74	12.90	120.8	177.5	173.2	56.3	177.1	118	71	71	71	0.011	1.001	6.168	746
2694	430.222	429.408		0.16	0.16	1.28	1.03	0.36	83	84	71	2.86	2	74	0.042	101	102	19.1	0.21	0.74	12.80	120.8	177.4	173.1	56.3	177.1	117	71	71	71	0.012	1.001	6.168	746
2695	430.383	429.568		0.16	0.16	1.28	1.03	0.36	84	84	71	2.87	2	74	0.040	104	104	18.9	0.18	0.78	11.21	120.7	177.3	173.0	56.3	177.0	117	71	71	71	0.011	1.001	6.491	784
2696	430.543	429.727		0.16	0.16	1.28	1.03	0.36	84	84	71	2.87	2	74	0.043	100	100	19.6	-0.70	0.80	15.46	120.5	177.2	172.9	56.3	176.8	115	71	71	71	0.011	1.001	6.654	803
2697	430.703	429.888		0.16	0.16	1.28	1.03	0.36	84	84	71	2.86	2	74	0.045	98	99	19.5	0.10	0.76	11.70	120.5	177.0	172.8	56.3	176.7	116	71	71	71	0.012	1.001	6.367	768
2698	430.863	430.049		0.16	0.16	1.29	1.02	0.36	83	84	71	2.86	2	74	0.044	99	100	19.3	0.28	0.76	14.17	120.3	176.9	172.7	56.3	176.6	114	71	71	71	0.012	1.001	6.318	761
2699	431.023	430.208		0.16	0.16	1.28	1.03	0.36	84	84	71	2.87	2	74	0.041	102	102	18.9	0.33	0.74	11.02	120.2	176.9	172.6	56.3	176.5	114	71	71	71	0.011	1.001	6.186	744
2700	431.184	430.369		0.16	0.16	1.28	1.03	0.36	84	84	71	2.87	2	81	0.044	100	100	19.0	-0.10	0.75	15.52	120.1	176.7	172.5	56.2	176.4	114	71	71	71	0.011	1.001	6.292	757
2701	431.344	430.529		0.16	0.16	1.28	1.03	0.36	84	84	71	2.86	2	76	0.041	103	103	19.0	-0.01	0.77	14.10	120.1	176.6	172.4	56.2	176.3	146	71	71	71	0.028	1.001	6.441	774
2702	431.505	430.689		0.16	0.16	1.28	1.03	0.36	84	84	70	2.86	2	75	0.043	101	100	18.5	0.52	0.76	14.28	120.0	176.5	172.3	56.2	176.2	148	71	71	70	0.014	1.001	6.337	761
2703	431.665	430.849		0.16	0.16	1.29	1.03	0.36	84	84	70	2.87	2	74	0.044	99	99	19.1	-0.53	0.75	13.06	119.9	176.6	172.3	56.2	176.1	136	71	71	70	0.013	1.001	6.273	753
2704	431.825	431.010		0.16	0.16	1.28	1.03	0.36	84	84	70	2.87	2	74	0.046	97	98	19.0	0.10	0.72	14.20	119.7	176.4	172.2	56.3	176.0	129	71	71	70	0.012	1.001	6.008	720
2705	431.985	431.170		0.16	0.16	1.28	1.03	0.36	84	84	70	2.86	2	74	0.044	99	99	19.0	-0.02	0.74	12.05	119.6	176.3	172.0	56.3	175.9	125	71	71	70	0.012	1.001	6.203	743
2706	432.145	431.330		0.16	0.16	1.28	1.03	0.36	84	84	71	2.87	2	74	0.045	98	98	19.0	-0.02	0.78	12.93	119.5	176.2	171.9	56.3	175.8	124	71	71	71	0.012	1.001	6.497	777
2707	432.305	431.491		0.16	0.16	1.28	1.03	0.36	83	84	70	2.87	2	74	0.042	101	102	19.1	-0.12	0.76	14.85	119.4	176.0	171.8	56.3	175.7	122	71	71	70	0.011	1.001	6.332	757
2708	432.465	431.651		0.16	0.16	1.29	1.03	0.36	83	84	71	2.88	2	74	0.045	98	98	19.4	-0.32	0.70	12.92	119.2	175.9	171.7	56.3	175.5	121	71	71	71	0.011	1.001	5.849	698
2709	432.625	431.811		0.16	0.16	1.28	1.03	0.36	84	84	70	2.86	2	74	0.043	100	100	19.4	0.03	0.74	11.68	119.2	175.8	171.6	56.3	175.4	120	71	71	70	0.011	1.001	6.171	736
2710	432.786	431.973		0.16	0.16	1.29	1.03	0.36	84	84	70	2.86	2	74	0.043	101	101	19.1	0.30	0.82	12.94	119.1	175.7	171.5	56.3	175.4	119	71	71	70	0.011	1.001	6.818	813
2711	432.946	432.132		0.16	0.16	1.28	1.03	0.36	84	84	71	2.86	2	74	0.039	105	105	19.2	-0.05	0.78	11.66	118.9	175.6	171.4	56.3	175.2	118	71	71	71	0.011	1.001	6.496	773
2712	433.106	432.292		0.16	0.16	1.29	1.03	0.36	84	84	71	2.86	2	74	0.044	99	99	19.4	-0.25	0.76	12.87	118.8	175.5	171.3	56.3	175.1	116	71	71	71	0.011	1.001	6.334	753
2713	433.266	432.453		0.16	0.16	1.28	1.03	0.36	84	84	71	2.86	2	74	0.043	100	101	19.2	0.17	0.78	13.83	118.7	175.4	171.2	56.3	175.0	116	71	71	71	0.011	1.001	6.494	772
2714	433.426	432.613		0.16	0.16	1.28	1.03	0.36	84	84	71	2.86	2	74	0.046	97	97	19.4	-0.21	0.80	15.48	118.6	175.3	171.1	56.3	174.9	115	71	71	71	0.010	1.001	6.661	791
2715	433.586	432.773		0.16	0.16	1.28	1.03	0.36	84	84	71	2.86	2	74	0.044	99	99	19.1	0.38	0.76	14.94	118.5	175.1	171.0	56.3	174.8	116	71	71	71	0.011	1.001	6.332	751
2716	433.747	432.934		0.16	0.16	1.28	1.03	0.36	84	84	71	2.86	2	74	0.043	101	101	19.1	-0.07	0.70	14.24	118.4	175.1	170.9	56.3	174.7	116	71	71	71	0.010	1.001	5.850	693
2717	433.907	433.094		0.16	0.16	1.28	1.03	0.36	84	84	71	2.87	2	74	0.042	101	101	18.9	0.25	0.72	14.16	118.3	175.0	171.1	56.3	174.6	115	71	71	71	0.010	1.001	6.012	712
2718	434.068	433.254		0.16	0.16	1.28	1.03	0.36	84	84	71	2.87	2	74	0.043	101	100	19.2	-0.36	0.72	11.64	118.2	174.8	170.6	56.3	174.5	114	71	71	71	0.011	1.001	6.007	711

Elapsed Time	Particulate Sampling Data																	Fuel Weight, lb		Flow, gpm		Temperature Data, oF													
	Gas Meter Cubic Feet (1)	Gas Meter Cubic Feet (2)	Gas Meter Cubic Feet (amb)	Sample Rate, cfm (1)	Sample Rate, cfm (2)	Orifice dH (1)	Orifice dH (2)	Orifice dH (amb)	Meter oF (1)	Meter oF (2)	Meter oF (amb)	Meter Vac. In. Hg. (1)	Meter Vac. In. Hg. (2)	Dilution Tunnel Temp.	Dilution Tunnel dP	Pro. Rate (%) (1)	Pro. Rate (%) (2)	Scale Reading	Weight Change	Load Side Liquid Flow Rate	Boiler Side Liquid Flow Rate (optional)	Thermopile ΔT	Boiler to Heat Exch. Temp.	Heat Exch to Boiler Temp.	Inlet Load Temp.	Outlet Load Temp.	Stack	Filter (1)	Filter (2)	Ambient		Specific Heat of Inlet Water (BTU/lb-°F)	Mass Flow Rate of Inlet Water (lb/min)	Heat Output, Btu
2719	434.228	433.414		0.16	0.16	1.28	1.03	0.36	84	84	71	2.87	2	74	0.045	98	98	19.2	0.01	0.72	15.51	118.0	174.6	170.5	56.3	174.4	114	71	71	71	0.011	1.001	6.007	710
2720	434.388	433.575		0.16	0.16	1.28	1.03	0.36	84	84	71	2.88	2	74	0.044	99	100	19.2	0.02	0.84	9.07	117.9	174.5	170.3	56.3	174.2	115	71	71	71	0.010	1.001	6.988	825
2721	434.549	433.735		0.16	0.16	1.28	1.03	0.36	84	84	70	2.87	2	74	0.043	101	100	18.9	0.31	0.68	14.35	117.8	174.5	170.3	56.3	174.2	113	71	71	70	0.010	1.001	5.690	671
2722	434.709	433.895		0.16	0.16	1.27	1.03	0.36	84	84	71	2.87	2	74	0.042	101	101	19.2	-0.31	0.74	14.22	117.7	174.4	170.2	56.3	174.0	114	71	71	71	0.010	1.001	6.176	728
2723	434.869	434.056		0.16	0.16	1.28	1.03	0.36	84	84	71	2.87	2	75	0.046	97	98	19.2	0.02	0.74	13.95	117.6	174.2	170.0	56.3	173.9	113	71	71	71	0.010	1.001	6.188	728
2724	435.029	434.216		0.16	0.16	1.28	1.03	0.36	84	84	71	2.87	2	74	0.042	101	101	18.9	0.29	0.73	10.74	117.5	174.1	170.0	56.3	173.8	112	71	71	71	0.010	1.001	6.048	712
2725	435.189	434.376		0.16	0.16	1.28	1.03	0.36	84	84	71	2.86	2	74	0.040	104	104	19.1	-0.15	0.70	10.74	117.4	174.0	169.9	56.3	173.7	112	71	71	71	0.010	1.001	5.843	687
2726	435.349	434.537		0.16	0.16	1.28	1.03	0.36	84	84	71	2.87	2	74	0.044	99	100	19.2	-0.15	0.75	12.93	117.3	173.9	169.8	56.3	173.6	112	71	71	71	0.009	1.001	6.286	738
2727	435.509	434.697		0.16	0.16	1.28	1.03	0.36	84	84	71	2.87	2	74	0.047	96	96	19.1	0.08	0.72	14.16	117.2	173.8	169.7	56.3	173.5	111	71	71	71	0.010	1.001	5.999	704
2728	435.669	434.857		0.16	0.16	1.28	1.03	0.36	84	84	71	2.87	2	74	0.045	98	98	19.8	-0.72	0.78	10.37	117.0	173.7	169.5	56.3	173.3	112	71	71	71	0.009	1.001	6.517	763
2729	435.829	435.018		0.16	0.16	1.28	1.03	0.36	84	84	71	2.86	2	74	0.045	98	99	19.1	0.70	0.72	12.19	116.9	173.6	169.4	56.4	173.3	111	71	71	71	0.010	1.001	6.016	704
2730	435.990	435.177		0.16	0.16	1.28	1.03	0.36	84	84	71	2.86	2	74	0.043	101	100	19.1	0.08	0.74	15.52	116.8	173.5	169.3	56.4	173.1	111	71	71	71	0.009	1.001	6.170	722
2731	436.149	435.338		0.16	0.16	1.28	1.03	0.36	84	84	71	2.86	2	80	0.045	98	99	19.4	-0.34	0.72	14.29	116.7	173.4	169.2	56.4	173.1	110	71	71	71	0.009	1.001	6.008	702
2732	436.310	435.498		0.16	0.16	1.28	1.03	0.36	84	84	71	2.87	2	75	0.041	103	103	19.0	0.45	0.74	15.56	116.6	173.2	169.1	56.4	173.0	145	71	71	71	0.025	1.001	6.177	721
2733	436.470	435.658		0.16	0.16	1.29	1.03	0.36	84	84	71	2.87	2	74	0.043	100	100	19.2	-0.24	0.82	14.24	116.5	173.2	169.0	56.4	172.9	140	71	71	71	0.011	1.001	6.820	795
2734	436.631	435.818		0.16	0.16	1.29	1.03	0.36	84	84	71	2.86	2	75	0.041	103	103	19.4	-0.18	0.78	14.15	116.4	173.1	168.9	56.4	172.7	130	71	71	71	0.011	1.001	6.479	755
2735	436.791	435.979		0.16	0.16	1.28	1.03	0.36	84	84	71	2.87	2	75	0.042	101	102	19.8	-0.40	0.68	13.78	116.2	172.9	168.8	56.4	172.6	124	71	71	71	0.011	1.001	5.685	662
2736	436.952	436.139		0.16	0.16	1.29	1.03	0.36	84	84	71	2.87	2	74	0.042	102	101	19.4	0.40	0.78	12.94	116.2	172.8	168.7	56.4	172.5	121	71	71	71	0.010	1.001	6.497	756
2737	437.111	436.299		0.16	0.16	1.29	1.03	0.36	84	84	71	2.87	2	75	0.045	97	98	19.4	-0.06	0.84	15.43	116.0	172.8	168.7	56.4	172.4	120	71	71	71	0.010	1.001	6.984	811
2738	437.272	436.459		0.16	0.16	1.28	1.03	0.36	84	84	71	2.86	2	75	0.044	100	99	19.3	0.11	0.80	13.08	115.9	172.6	168.5	56.4	172.3	118	71	71	71	0.010	1.001	6.660	773
2739	437.432	436.620		0.16	0.16	1.28	1.02	0.36	84	84	71	2.88	2	75	0.043	100	101	18.8	0.50	0.80	15.41	115.8	172.5	168.5	56.4	172.2	116	71	71	71	0.010	1.001	6.661	772
2740	437.592	436.780		0.16	0.16	1.27	1.03	0.36	84	84	71	2.87	2	74	0.042	101	101	19.2	-0.41	0.74	13.62	115.8	172.4	168.3	56.4	172.1	114	71	71	71	0.010	1.001	6.175	716
2741	437.752	436.940		0.16	0.16	1.28	1.03	0.36	84	84	71	2.86	2	75	0.044	99	99	19.0	0.24	0.70	15.51	115.7	172.3	168.3	56.4	172.1	114	71	71	71	0.010	1.001	5.848	677
2742	437.912	437.101		0.16	0.16	1.28	1.03	0.36	84	84	71	2.86	2	75	0.046	97	98	19.3	-0.32	0.76	14.26	115.5	172.2	168.1	56.4	171.9	114	71	71	71	0.010	1.001	6.339	733
2743	438.072	437.261		0.16	0.16	1.28	1.03	0.36	84	84	71	2.87	2	74	0.044	99	99	19.2	0.06	0.76	15.49	115.4	172.0	168.0	56.4	171.8	113	71	71	71	0.009	1.001	6.338	732
2744	438.232	437.421		0.16	0.16	1.28	1.03	0.36	84	84	71	2.87	2	75	0.044	99	99	19.3	-0.09	0.78	15.52	115.3	172.0	167.9	56.4	171.7	113	71	71	71	0.010	1.001	6.498	750
2745	438.392	437.582		0.16	0.16	1.28	1.03	0.36	84	84	71	2.86	2	75	0.043	100	101	18.7	0.62	0.70	14.27	115.1	171.9	167.8	56.4	171.5	112	71	71	71	0.009	1.001	5.852	674
2746	438.553	437.742		0.16	0.16	1.29	1.03	0.36	84	84	71	2.87	2	75	0.042	102	102	19.1	-0.37	0.72	15.53	115.0	171.7	167.7	56.4	171.4	112	71	71	71	0.009	1.001	6.013	692
2747	438.713	437.902		0.16	0.16	1.29	1.03	0.36	84	84	71	2.87	2	75	0.046	97	97	19.1	-0.02	0.78	15.46	114.9	171.6	167.6	56.4	171.3	111	71	71	71	0.009	1.001	6.497	747
2748	438.873	438.063		0.16	0.16	1.29	1.03	0.36	84	84	71	2.86	2	75	0.041	102	103	19.6	-0.54	0.80	15.50	114.8	171.5	167.4	56.4	171.2	110	71	71	71	0.009	1.001	6.660	765
2749	439.033	438.222		0.16	0.16	1.29	1.03	0.36	84	84	71	2.87	2	75	0.043	100	100	19.4	0.22	0.74	15.51	114.7	171.4	167.3	56.4	171.1	111	71	71	71	0.009	1.001	6.167	708
2750	439.193	438.383		0.16	0.16	1.28	1.03	0.36	84	84	71	2.86	2	75	0.046	97	98	19.2	0.23	0.72	15.47	114.6	171.3	167.3	56.4	171.0	111	71	71	71	0.009	1.001	6.010	689
2751	439.354	438.544		0.16	0.16	1.28	1.03	0.36	84	84	71	2.87	2	75	0.043	101	101	19.5	-0.34	0.70	15.49	114.4	171.2	167.1	56.4	170.8	110	71	71	71	0.009	1.001	5.855	671
2752	439.515	438.703		0.16	0.16	1.28	1.03	0.36	84	84	71	2.87	2	75	0.046	97	96	19.4	0.11	0.80	15.47	114.3	171.1	167.0	56.4	170.7	110	71	71	71	0.009	1.001	6.658	762
2753	439.675	438.863		0.16	0.16	1.28	1.03	0.36	84	84	71	2.86	2	74	0.044	99	99	19.2	0.19	0.76	15.48	114.2	171.0	166.9	56.4	170.7	110	71	71	71	0.009	1.001	6.323	723
2754	439.835	439.024		0.16	0.16	1.28	1.03	0.36	84	84	71	2.88	2	75	0.042	101	102	19.3	-0.11	0.77	15.52	114.1	170.8	166.8	56.4	170.6	109	71	71	71	0.009	1.001	6.387	730
2755	439.995	439.184		0.16	0.16	1.28	1.03	0.36	84	84	71	2.86	2	75	0.043	100	100	19.6	-0.22	0.72	14.23	114.0	170.7	166.6	56.4	170.4	109	71	71	71	0.009	1.001	6.013	686
2756	440.155	439.344		0.16	0.16	1.28	1.03	0.36	84	84	71	2.87	2	75	0.045	98	98	19.4	0.14	0.79	14.87	113.9	170.6	166.6	56.4	170.3	109	71	71	71	0.009	1.001	6.553	747
2757	440.315	439.504		0.16	0.16	1.28	1.03	0.36	84	84	71	2.86	2	75	0.046	97	97	19.4	-0.01	0.78	15.44	113.8	170.5	166.5	56.4	170.2	110	71	71	71	0.009	1.001	6.473	737
2758	440.475	439.665		0.16	0.16	1.28	1.02	0.36	84	84	71	2.87	2	75	0.042	101	102	19.4	0.08	0.77	15.49	113.6	170.3	166.2	56.4	170.0	109	71	71	71	0.009	1.001	6.390	727
2759	440.635	439.825		0.16	0.16	1.29	1.03	0.36	84	84	71	2.86	2	75	0.043	100	100	19.4	0.00	0.74	15.50	113.5	170.3	166.2	56.4	170.0	110	71	71	71	0.009	1.001	6.174	702
2760	440.795	439.985		0.16	0.16	1.28	1.03	0.36	84	84	71	2.87	2	75	0.043	100	100	19.3	0.06	0.71	14.23	113.3	170.0	166.0	56.4	169.8	109	71	71	71	0.009	1.001	5.880	667
2761	440.955	440.146		0.16	0.16	1.28	1.03	0.36	84	84	71	2.87	2	75	0.043	100	101	19.7	-0.39	0.80	15.55	113.3	170.1	166.0	56.4	169.7	109	71	71	71	0.009	1.001	6.656	755
2762	441.115	440.305		0.16	0.16	1.28	1.03	0.36	84	84	71	2.87	2	80	0.039	106	105	19.4	0.25	0.70	15.46	113.2	169.9	165.9	56.4	169.6	108	71	71	71	0.009	1.001	5.849	663
2763	441.276	440.465		0.16	0.16	1.28	1.03	0.36	84	84	71	2.88	2	76	0.040	104	104	19.1	0.36	0.82	15.50	113.1	169.8	165.8	56.4	169.5	144	71	71	71	0.026	1.001	6.824	772
2764	441.435	440.626		0.16	0.16	1.28	1.03	0.36	84	84	71	2.86	2	75	0.045	97	99	19.3	-0.27	0.74	15.55	113.0	169.7	165.7	56.4	169.4	135	71	71	71	0.009	1.001	6.172	698
2765	441.596	440.786		0.16	0.16	1.28	1.03	0.36	84	84	71	2.86	2	75	0.043	101	100	19.3	0.01	0.70	15.48	112.9	169.6	165.5	56.4	169.3	126	71	71	71	0.009	1.001	5.848	661
2766	441.756	440.946		0.16	0.16	1.29	1.03	0.36	84	84	71	2.86	2	75	0.043	100	100	19.3	-0.01	0.76	15.64	112.8	169.5	165.5	56.4	169.2	121	71	71	71	0.009	1.001	6.339	716
2767	441.916	441.107		0.16	0.16	1.28	1.03	0.36	84	84	71	2.87	2	75	0.043	100	101	19.4	-0.10	0.76	15.50	112.7	169.4	165.4	56.4	169.1	118	71	71	71	0.009	1.001	6.335	715
2768	442.077	441.266		0.16	0.16	1.28	1.03	0.36	84	84	71	2.87	2	75	0.045	98	97	19.3	0.16	0.78	15.55	112.5	169.3	165.2	56.4	169.0	115	71	71	71	0.009	1.001	6.495	732
2769	442.237	441.427		0.16	0.16	1.28	1.03	0.36	84	84	71	2.86	2	75	0.046	97	98	19.4	-0.09	0.72	15.37	112.4	169.1	165.1	56.4	168.8	114	71	71	71	0.009	1.001	6.011	677
2770	442.397	441.588		0.16	0.16	1.29	1.03	0.36	84	84	71	2.87	2	75	0.044	99	100	19.2	0.18	0.68	15.45	112.3	169.0	165.0	56.4	168.7	113	71	71	71	0.009	1.001	5.888	640
2771	442.557	441.747		0.16	0.16	1.29	1.03	0.36	84	84	71	2.87	2	75	0.042	101	101	18.9	0.26	0.78	15.49	112.2	168.9	165.0	56.4	168.6	113	71	71	71	0.008	1.001	6.497	730
2772	442.718	441.907		0.16	0.16	1.28	1.03	0.36	84	84	71	2.86	2	75	0.044	100	99	19.0	-0.07	0.74	15.49	112.1	168.8	164.7	56.4	168.5	113	71	71	71	0.009	1.001	6.169	692
2773	442.878	442.068		0.16	0.16	1.28	1.03	0.36	84	84	71	2.87	2	75	0.045	98	99	19.0	-0.01	0.74	15.53	111.9	168.7	164.9	56.4	168.4	112	71	71	71	0.009	1.001	6.172	692
2774	443.038	442.228		0.16	0.16	1.29	1.03	0.36	84	84	71	2.86	2	75	0.044	99	99	19.2	-0.17	0.82	15.53	111.9	168.6	164.6	56.4	168.3	112	71	71	71	0.008	1.001	6.819	764
2775	443.198	442.388		0.16	0.16	1.28	1.03	0.36	84	84	71	2.86	2	75	0.044	99	99	19.5	-0.33	0.72	15.54	111.7	168.5	164.4	56.5	168.1	111	71	71	71	0.009	1.001	6.005	671
2776	443.358	442.549		0.16	0.16	1.28	1.03	0.36	84	84	71	2.87	2	75	0.046	97	98	19.4	0.14	0.70	14.29	111.7	168.4	164.5	56.5	168.1	111	71	71	71	0.009	1.001	5.847	654
2777	443.518	442.709		0.16	0.16	1.28	1.03	0.36	84	84	71	2.87	2	75	0.043	100	100	19.4	0.02	0.74	15.54	111.5	168.3	164.2	56.4	167.9	110	71	71	71	0.009	1.001	6.171	689
2778	443.678	442.869		0.16	0.16	1.28	1.03	0.36	84	84	71	2.86	2	75	0.045	98	98	19.7	-0.36	0.78	15.54	111.4	168.2	164.2	56.4	167.9	109	71	71	71	0.009	1.001	6.493	725
2779	443.838	443.029		0.16	0.16	1.28	1.03	0.36	84	84	71	2.86	2	75	0.044	99	99	19.4	0.34	0.72	15.45	111.2	168.1	164.0	56.4	167.7	109	71	71	71	0.009	1.001	6.017	670
2780	443.998	443.190		0.16	0.16	1.29	1.03	0.36	84	84	71	2.86	2	75	0.046	97	98	19.4	-0.02	0.74	15.46	111.2	167.9	163.9	56.4	167.6	110	71	71	71	0.009	1.001	6.173	687

Elapsed Time	Particulate Sampling Data																	Fuel Weight, lb		Flow, gpm		Temperature Data, oF														
	Gas Meter Cubic Feet (1)	Gas Meter Cubic Feet (2)	Gas Meter Cubic Feet (amb)	Sample Rate, cfm (1)	Sample Rate, cfm (2)	Orifice dH (1)	Orifice dH (2)	Orifice dH (amb)	Meter oF (1)	Meter oF (2)	Meter oF (amb)	Meter Vac. In. Hg. (1)	Meter Vac. In. Hg. (2)	Dilution Tunnel Temp.	Dilution Tunnel dP	Pro. Rate (%) (1)	Pro. Rate (%) (2)	Scale Reading	Weight Change	Load Side Liquid Flow Rate	Boiler Side Liquid Flow Rate (optional)	Thermopile ΔT	Boiler to Heat Exch. Temp.	Heat Exch to Boiler Temp.	Inlet Load Temp.	Outlet Load Temp.	Stack	Filter (1)	Filter (2)	Ambient		Specific Heat of Inlet Water (BTU/lb-°F)	Mass Flow Rate of Inlet Water (lb/min)	Heat Output, Btu
2781	444.158	443.350		0.16	0.16	1.28	1.03	0.36	84	84	71	2.87	2	75	0.042	101	102	19.2	0.21	0.78	15.51	111.1	167.9	163.9	56.5	167.6	109	71	71	71	0.008	1.001	6.488	722
2782	444.319	443.510		0.16	0.16	1.28	1.03	0.36	84	84	71	2.88	2	75	0.044	100	99	19.3	-0.13	0.72	15.52	111.0	167.7	163.7	56.4	167.4	109	71	71	71	0.009	1.001	6.015	668
2783	444.479	443.671		0.16	0.16	1.29	1.02	0.36	84	84	71	2.86	2	75	0.041	102	103	19.8	-0.47	0.74	15.47	110.9	167.5	163.6	56.4	167.2	109	71	71	71	0.008	1.001	6.177	686
2784	444.640	443.831		0.16	0.16	1.29	1.03	0.36	84	84	71	2.88	2	75	0.043	101	100	19.4	0.37	0.76	15.52	110.8	167.5	163.5	56.4	167.2	109	71	71	71	0.009	1.001	6.365	706
2785	444.800	443.991		0.16	0.16	1.28	1.03	0.36	84	84	71	2.86	2	75	0.043	100	100	19.5	-0.11	0.77	15.58	110.6	167.4	163.4	56.4	167.0	108	71	71	71	0.008	1.001	6.382	707
2786	444.960	444.152		0.16	0.16	1.29	1.03	0.36	84	84	71	2.88	2	75	0.039	105	106	19.2	0.30	0.82	15.41	110.5	167.2	163.3	56.4	166.9	107	71	71	71	0.008	1.001	6.802	753
2787	445.120	444.311		0.16	0.16	1.28	1.03	0.36	84	84	71	2.86	2	75	0.044	99	99	19.3	-0.03	0.75	15.48	110.4	167.1	163.2	56.4	166.8	107	71	71	71	0.008	1.001	6.254	691
2788	445.281	444.472		0.16	0.16	1.29	1.03	0.36	84	84	71	2.87	2	75	0.048	95	96	19.2	0.06	0.80	15.58	110.3	167.0	163.1	56.4	166.7	108	71	71	71	0.008	1.001	6.664	736
2789	445.441	444.633		0.16	0.16	1.28	1.03	0.36	84	84	71	2.86	2	75	0.042	101	102	19.4	-0.20	0.76	15.53	110.2	166.9	163.0	56.4	166.6	107	71	71	71	0.008	1.001	6.336	699
2790	445.601	444.792		0.16	0.16	1.28	1.03	0.36	84	84	71	2.87	2	75	0.042	101	101	19.4	-0.01	0.70	15.51	110.0	166.7	162.8	56.4	166.4	107	71	71	71	0.008	1.001	5.849	644
2791	445.761	444.953		0.16	0.16	1.28	1.03	0.36	84	84	71	2.87	2	75	0.043	100	101	19.2	0.24	0.82	15.51	109.9	166.6	162.7	56.5	166.4	107	71	71	71	0.008	1.001	6.818	750
2792	445.921	445.114		0.16	0.16	1.28	1.03	0.36	84	84	71	2.86	2	75	0.042	101	102	19.0	0.12	0.78	15.47	109.8	166.6	162.7	56.4	166.2	106	71	71	71	0.008	1.001	6.499	714
2793	446.081	445.273		0.16	0.16	1.28	1.03	0.36	84	84	71	2.88	2	81	0.044	99	99	19.0	0.03	0.70	15.52	109.8	166.5	162.6	56.4	166.2	106	71	71	71	0.008	1.001	5.852	643
2794	446.241	445.433		0.16	0.16	1.28	1.03	0.36	84	84	71	2.86	2	76	0.042	101	102	19.4	-0.37	0.74	15.50	109.6	166.3	162.4	56.4	166.0	145	71	71	71	0.033	1.001	6.174	677
2795	446.401	445.594		0.16	0.16	1.28	1.03	0.36	84	84	71	2.87	2	75	0.044	99	100	19.5	-0.12	0.76	15.49	109.5	166.3	162.4	56.4	166.0	132	71	71	71	0.009	1.001	6.335	695
2796	446.561	445.754		0.16	0.16	1.29	1.03	0.36	84	84	71	2.88	2	75	0.044	99	99	19.5	0.02	0.82	15.48	109.4	166.2	162.3	56.4	165.8	123	71	71	71	0.008	1.001	6.822	747
2797	446.722	445.914		0.16	0.16	1.29	1.03	0.36	84	84	71	2.85	2	75	0.043	101	100	18.9	0.61	0.74	15.53	109.3	166.0	162.1	56.4	165.7	119	71	71	71	0.008	1.001	6.171	675
2798	446.882	446.075		0.16	0.16	1.29	1.03	0.36	84	84	71	2.87	2	75	0.043	100	101	19.4	-0.52	0.74	15.50	109.2	165.9	162.1	56.4	165.6	116	71	71	71	0.008	1.001	6.172	675
2799	447.042	446.235		0.16	0.16	1.29	1.03	0.36	84	84	71	2.87	2	75	0.045	98	98	19.5	-0.13	0.72	15.52	109.0	165.8	161.9	56.4	165.5	114	71	71	71	0.008	1.001	6.012	656
2800	447.202	446.395		0.16	0.16	1.29	1.03	0.36	84	84	71	2.87	2	75	0.044	99	99	19.3	0.22	0.66	15.50	108.9	165.7	161.8	56.5	165.3	112	71	71	71	0.008	1.001	5.529	603
2801	447.363	446.555		0.16	0.16	1.28	1.03	0.36	84	84	71	2.87	2	75	0.045	98	98	19.3	0.04	0.74	15.52	108.8	165.6	161.7	56.5	165.2	111	71	71	71	0.008	1.001	6.172	672
2802	447.523	446.716		0.16	0.16	1.29	1.03	0.36	84	84	71	2.86	2	75	0.044	99	100	18.9	0.33	0.72	15.49	108.7	165.5	161.6	56.4	165.1	111	71	71	71	0.008	1.001	6.008	654
2803	447.684	446.876		0.16	0.16	1.28	1.03	0.36	84	84	71	2.86	2	75	0.043	101	100	18.9	0.01	0.76	15.52	108.6	165.3	161.5	56.4	165.0	111	71	71	71	0.008	1.001	6.335	689
2804	447.844	447.036		0.16	0.16	1.28	1.03	0.36	84	84	71	2.87	2	75	0.044	99	99	19.3	-0.34	0.76	15.50	108.5	165.3	161.5	56.5	165.0	110	71	71	71	0.008	1.001	6.333	688
2805	448.004	447.197		0.16	0.16	1.28	1.03	0.36	84	84	71	2.88	2	75	0.040	104	105	19.1	0.19	0.74	15.53	108.4	165.1	161.3	56.5	164.9	109	71	71	71	0.008	1.001	6.175	670
2806	448.164	447.357		0.16	0.16	1.28	1.03	0.36	84	84	71	2.86	2	75	0.043	100	100	19.5	-0.39	0.74	15.45	108.3	165.1	161.2	56.4	164.7	109	71	71	71	0.008	1.001	6.172	669
2807	448.324	447.517		0.16	0.16	1.28	1.03	0.36	84	84	71	2.86	2	75	0.043	100	100	18.9	0.56	0.74	15.44	108.2	165.0	161.2	56.5	164.7	109	71	71	71	0.008	1.001	6.169	668
2808	448.484	447.678		0.16	0.16	1.28	1.03	0.36	84	84	71	2.87	2	75	0.044	99	100	19.2	-0.28	0.80	15.50	108.0	164.8	161.0	56.5	164.5	108	71	71	71	0.008	1.001	6.656	720
2809	448.644	447.838		0.16	0.16	1.28	1.03	0.36	84	84	71	2.87	2	75	0.045	98	98	19.4	-0.19	0.70	15.50	107.9	164.7	160.9	56.5	164.4	107	71	71	71	0.008	1.001	5.845	632
2810	448.805	447.998		0.16	0.16	1.29	1.03	0.36	84	84	71	2.86	2	75	0.043	101	100	19.0	0.34	0.74	15.54	107.9	164.6	160.8	56.5	164.3	107	71	71	71	0.008	1.001	6.165	666
2811	448.965	448.159		0.16	0.16	1.29	1.03	0.36	84	84	71	2.87	2	75	0.041	102	103	19.2	-0.14	0.72	15.52	107.8	164.5	160.7	56.4	164.2	107	71	71	71	0.008	1.001	5.995	647
2812	449.125	448.318		0.16	0.16	1.28	1.03	0.36	84	84	71	2.87	2	75	0.044	99	99	19.1	0.10	0.73	15.51	107.6	164.3	160.7	56.5	164.0	107	71	71	71	0.007	1.001	6.058	652
2813	449.285	448.479		0.16	0.16	1.29	1.03	0.36	84	84	71	2.87	2	75	0.044	99	100	19.5	-0.39	0.72	15.52	107.6	164.3	160.5	56.5	164.1	106	71	71	71	0.008	1.001	5.999	646
2814	449.445	448.640		0.16	0.16	1.29	1.03	0.36	84	84	71	2.87	2	75	0.043	100	101	19.6	-0.09	0.76	15.61	107.4	164.2	160.5	56.5	163.9	107	71	71	71	0.008	1.001	6.333	681
2815	449.606	448.800		0.16	0.16	1.28	1.03	0.36	84	84	71	2.87	2	75	0.043	101	100	19.5	0.02	0.77	15.47	107.3	164.0	160.3	56.4	163.7	107	71	71	71	0.008	1.001	6.396	687
2816	449.765	448.959		0.16	0.16	1.28	1.03	0.36	84	84	71	2.87	2	75	0.044	98	99	19.0	0.52	0.72	15.54	107.2	163.9	160.1	56.4	163.6	107	71	71	71	0.008	1.001	6.007	645
2817	449.926	449.120		0.16	0.16	1.29	1.03	0.36	84	84	71	2.87	1.60	75	0.043	101	101	19.4	-0.36	0.70	15.41	107.2	163.8	160.1	56.4	163.6	106	71	71	71	0.008	1.001	5.868	630
2818	450.086	449.281		0.16	0.16	1.28	1.03	0.36	84	84	71	2.86	1.60	75	0.043	100	101	19.2	0.19	0.68	15.57	107.0	163.7	159.9	56.5	163.4	105	71	71	71	0.008	1.001	5.706	611
2819	450.247	449.440		0.16	0.16	1.28	1.03	0.36	84	84	71	2.87	1.60	75	0.044	100	99	19.3	-0.13	0.74	15.48	106.9	163.5	159.8	56.4	163.3	107	71	71	71	0.008	1.001	6.172	661
2820	450.407	449.601		0.16	0.16	1.28	1.03	0.36	84	84	71	2.86	1.60	75	0.042	101	102	19.4	-0.12	0.78	15.57	106.8	163.5	159.7	56.4	163.3	106	71	71	71	0.008	1.001	6.494	695
2821	450.567	449.761		0.16	0.16	1.29	1.03	0.36	84	84	71	2.86	1.60	75	0.042	101	102	19.1	0.30	0.82	15.60	106.7	163.4	159.6	56.4	163.1	106	71	71	71	0.008	1.001	6.823	729
2822	450.727	449.921		0.16	0.16	1.29	1.03	0.36	84	84	71	2.87	1.60	75	0.044	99	99	19.1	0.07	0.70	15.54	106.6	163.3	159.6	56.4	163.0	105	71	71	71	0.008	1.001	5.852	625
2823	450.887	450.081		0.16	0.16	1.28	1.03	0.36	84	84	71	2.87	1.60	75	0.042	101	102	19.4	-0.34	0.72	15.54	106.5	163.2	159.4	56.4	162.9	104	71	71	71	0.008	1.001	6.014	641
2824	451.047	450.242		0.16	0.16	1.29	1.04	0.36	84	84	71	2.86	1.60	79	0.040	104	105	19.6	-0.15	0.78	15.58	106.3	163.0	159.3	56.4	162.8	105	71	71	71	0.008	1.001	6.501	692
2825	451.208	450.402		0.16	0.16	1.29	1.03	0.36	84	84	71	2.86	1.60	75	0.040	104	104	19.3	0.29	0.78	15.55	106.3	163.0	159.2	56.4	162.7	139	71	71	71	0.012	1.001	6.496	691
2826	451.367	450.562		0.16	0.16	1.29	1.03	0.36	84	84	71	2.88	1.60	75	0.042	101	102	19.1	0.20	0.78	15.52	106.2	162.8	159.1	56.4	162.6	128	71	71	71	0.008	1.001	6.500	691
2827	451.528	450.723		0.16	0.16	1.29	1.03	0.36	84	84	71	2.87	1.60	75	0.043	101	101	19.5	-0.39	0.78	15.46	106.1	162.7	159.0	56.4	162.4	119	71	71	71	0.008	1.001	6.496	690
2828	451.688	450.883		0.16	0.16	1.29	1.03	0.36	84	84	71	2.87	1.60	75	0.044	99	99	19.1	0.40	0.70	15.58	106.0	162.6	158.9	56.4	162.3	115	71	71	71	0.008	1.001	5.851	621
2829	451.848	451.043		0.16	0.16	1.29	1.03	0.36	84	84	71	2.88	1.60	75	0.042	101	102	19.4	-0.30	0.70	15.52	105.9	162.5	158.8	56.4	162.3	112	71	71	71	0.008	1.001	5.849	620
2830	452.008	451.205		0.16	0.16	1.29	1.03	0.36	84	84	71	2.87	1.60	75	0.046	97	98	19.4	-0.05	0.74	15.44	105.7	162.4	158.7	56.4	162.1	112	71	71	71	0.008	1.001	6.174	654
2831	452.169	451.364		0.16	0.16	1.28	1.03	0.36	84	84	71	2.86	1.60	75	0.043	101	100	19.5	-0.12	0.74	15.54	105.6	162.3	158.6	56.4	162.0	111	71	71	71	0.007	1.001	6.172	652
2832	452.329	451.524		0.16	0.16	1.29	1.03	0.36	84	84	71	2.87	1.60	75	0.045	98	98	18.5	0.99	0.70	15.54	105.5	162.2	158.5	56.4	161.9	110	71	71	71	0.007	1.001	5.847	618
2833	452.489	451.685		0.16	0.16	1.29	1.03	0.36	84	84	71	2.88	1.60	75	0.043	100	101	19.0	-0.42	0.80	15.42	105.2	162.1	158.2	56.5	161.7	109	71	71	71	0.008	1.001	6.663	702
2834	452.649	451.845		0.16	0.16	1.29	1.03	0.36	84	84	71	2.87	1.60	75	0.042	101	102	19.1	-0.13	0.78	15.61	105.3	161.9	158.1	56.4	161.7	108	71	71	71	0.008	1.001	6.492	684
2835	452.810	452.005		0.16	0.16	1.29	1.03	0.36	84	84	71	2.87	1.60	75	0.041	103	103	19.1	-0.02	0.78	15.56	105.2	161.9	158.0	56.4	161.6	108	71	71	71	0.008	1.001	6.499	684
2836	452.971	452.166		0.16	0.16	1.29	1.03	0.36	84	84	71	2.87	1.60	75	0.044	100	100	19.0	0.10	0.78	15.59	105.1	161.8	158.0	56.4	161.5	108	71	71	71	0.008	1.001	6.496	684
2837	453.131	452.327		0.16	0.16	1.29	1.03	0.36	84	84	71	2.88	1.60	75	0.046	97	98	19.1	-0.05	0.84	15.56	105.0	161.6	157.8	56.4	161.4	107	71	71	71	0.007	1.001	6.983	734
2838	453.291	452.486		0.16	0.16	1.29	1.03	0.36	84	84	71	2.87	1.60	75	0.042	101	101	19.3	-0.22	0.78	15.50	104.9	161.5	157.7	56.3	161.2	106	71	71	71	0.008	1.001	6.499	682
2839	453.451	452.647		0.16	0.16	1.29	1.03	0.36	84	84	71	2.87	1.60	75	0.041	102	103	19.0	0.26	0.80	15.49	104.8	161.4	157.6	56.3	161.1	107	71	71	71	0.008	1.001	6.651	698
2840	453.611	452.808		0.16	0.16	1.28	1.03	0.36	84	84	71	2.87	1.60	75	0.044	99	100	19.1	-0.04	0.76	15.38	104.7	161.2	157.4	56.3	161.0	106	71	71	71	0.008	1.001	6.334	664
2841	453.772	452.968		0.16	0.16	1.28	1.03	0.36	84	84	71	2.87	1.60	75	0.043	101	100	19.1	-0.04	0.80	15.51	104.6	161.2	157.4	56.3	160.9	106	71	71	71	0.008	1.001	6.650	696
2842	453.932	453.128		0.16	0.16	1.28	1.04	0.36	84	84	71	2.87	1.60	75	0.044	99	99	19.0	0.13	0.80	15.50	104.5	161.1	157.3	56.3	160.8	106	71	71	71	0.008	1.001	6.633	694

Elapsed Time	Particulate Sampling Data																	Fuel Weight, lb		Flow, gpm		Temperature Data, oF												
	Gas Meter Cubic Feet (1)	Gas Meter Cubic Feet (2)	Gas Meter Cubic Feet (amb)	Sample Rate, cfm (1)	Sample Rate, cfm (2)	Orifice dH (1)	Orifice dH (2)	Orifice dH (amb)	Meter oF (1)	Meter oF (2)	Meter oF (amb)	Meter Vac. In. Hg. (1)	Meter Vac. In. Hg. (2)	Dilution Tunnel Temp.	Dilution Tunnel dP	Pro. Rate (%) (1)	Pro. Rate (%) (2)	Scale Reading	Weight Change	Load Side Liquid Flow Rate	Boiler Side Liquid Flow Rate (optional)	Thermopile ΔT	Boiler to Heat Exch. Temp.	Heat Exch to Boiler Temp.	Inlet Load Temp.	Outlet Load Temp.	Stack	Filter (1)	Filter (2)	Ambient		Specific Heat of Inlet Water (BTU/lb-°F)	Mass Flow Rate of Inlet Water (lb/min)	Heat Output, Btu
2843	454.092	453.289		0.16	0.16	1.29	1.03	0.36	84	84	71	2.87	1.60	75	0.042	101	102	19.0	-0.03	0.72	15.48	104.3	160.9	157.1	56.3	160.7	106	71	71	71	0.007	1.001	6.011	628
2844	454.252	453.449		0.16	0.16	1.29	1.03	0.36	84	84	71	2.86	1.60	75	0.041	102	103	19.0	0.03	0.75	15.43	104.2	160.9	157.0	56.3	160.5	106	71	71	71	0.008	1.001	6.230	650
2845	454.412	453.609		0.16	0.16	1.28	1.03	0.36	84	84	71	2.87	1.60	75	0.042	101	102	19.1	-0.11	0.77	15.56	104.1	160.7	156.9	56.3	160.4	106	71	71	71	0.008	1.001	6.451	673
2846	454.572	453.770		0.16	0.16	1.29	1.03	0.36	84	84	71	2.87	1.60	75	0.043	100	101	19.1	0.00	0.84	15.55	104.0	160.6	156.8	56.3	160.3	105	71	71	71	0.008	1.001	7.010	730
2847	454.732	453.930		0.16	0.16	1.29	1.03	0.36	84	84	71	2.87	1.60	75	0.044	99	99	19.6	-0.49	0.77	15.52	104.0	160.6	156.7	56.3	160.3	105	71	71	71	0.008	1.001	6.405	667
2848	454.893	454.090		0.16	0.16	1.29	1.04	0.36	84	84	71	2.86	1.60	75	0.042	102	102	19.2	0.34	0.80	15.54	103.8	160.5	156.7	56.3	160.2	104	71	71	71	0.008	1.001	6.661	693
2849	455.053	454.251		0.16	0.16	1.29	1.03	0.36	84	84	71	2.88	1.60	75	0.042	101	102	18.9	0.28	0.82	15.50	103.7	160.3	156.5	56.3	160.0	103	71	71	71	0.007	1.001	6.824	708
2850	455.213	454.411		0.16	0.16	1.29	1.03	0.36	84	84	71	2.86	1.60	75	0.046	97	97	19.3	-0.36	0.78	15.52	103.6	160.2	156.4	56.3	159.9	104	71	71	71	0.008	1.001	6.495	674
2851	455.373	454.571		0.16	0.16	1.29	1.03	0.36	84	84	71	2.87	1.60	75	0.044	99	99	19.0	0.33	0.80	15.46	103.5	160.0	156.2	56.3	159.8	103	71	71	71	0.008	1.001	6.663	690
2852	455.534	454.732		0.16	0.16	1.29	1.04	0.36	84	84	71	2.87	1.60	75	0.044	100	100	19.5	-0.52	0.82	15.47	103.3	159.9	156.1	56.3	159.6	104	71	71	71	0.007	1.001	6.823	706
2853	455.695	454.892		0.16	0.16	1.29	1.03	0.36	84	84	71	2.88	1.60	75	0.047	96	96	19.5	-0.04	0.78	15.56	103.2	159.8	156.0	56.3	159.5	104	71	71	71	0.007	1.001	6.499	671
2854	455.855	455.052		0.16	0.16	1.29	1.03	0.36	84	84	71	2.88	1.60	75	0.041	102	103	18.9	0.59	0.76	15.46	103.1	159.7	155.9	56.3	159.4	104	71	71	71	0.007	1.001	6.333	654
2855	456.015	455.212		0.16	0.16	1.29	1.04	0.36	84	84	71	2.88	1.60	79	0.045	98	98	19.3	-0.35	0.72	15.48	103.0	159.6	155.8	56.3	159.3	104	71	71	71	0.004	1.001	6.009	620
2856	456.175	455.373		0.16	0.16	1.29	1.03	0.36	84	84	71	2.86	1.60	76	0.043	100	101	18.5	0.76	0.78	15.52	102.9	159.4	155.7	56.3	159.2	137	71	71	71	0.010	1.001	6.500	670
2857	456.336	455.533		0.16	0.16	1.29	1.03	0.36	84	84	71	2.88	1.60	83	0.042	103	102	18.7	-0.14	0.80	15.58	102.8	159.3	155.5	56.3	159.0	130	71	71	71	0.017	1.001	6.659	685
2858	456.496	455.693		0.16	0.16	1.28	1.03	0.36	84	84	71	2.88	1.60	86	0.043	101	101	17.6	1.09	0.74	15.55	102.8	159.3	155.5	56.2	159.1	154	71	71	71	0.027	1.001	6.172	635
2859	456.656	455.854		0.16	0.16	1.29	1.04	0.36	84	84	71	2.88	1.60	89	0.043	101	102	17.1	0.45	0.74	15.49	102.9	159.4	155.7	56.2	159.1	167	72	71	71	0.028	1.001	6.170	636
2860	456.816	456.013		0.16	0.16	1.29	1.04	0.36	84	84	71	2.88	1.60	91	0.041	104	104	16.4	0.76	0.80	15.46	103.0	159.6	155.8	56.2	159.2	181	72	71	71	0.031	1.001	6.659	687
2861	456.976	456.173		0.16	0.16	1.29	1.03	0.36	84	84	71	2.87	1.70	93	0.039	107	107	16.0	0.41	0.76	15.62	103.2	159.9	156.2	56.2	159.4	194	72	72	71	0.035	1.001	6.336	655
2862	457.136	456.334		0.16	0.16	1.29	1.04	0.36	84	84	71	2.89	1.70	95	0.040	106	107	15.1	0.87	0.74	15.46	103.7	160.3	156.5	56.2	160.0	207	72	72	71	0.036	1.001	6.177	642
2863	457.295	456.493		0.16	0.16	1.30	1.03	0.36	84	84	71	2.87	1.70	98	0.041	104	104	14.2	0.86	0.80	15.52	104.1	160.9	157.0	56.2	160.4	219	73	72	71	0.036	1.001	6.656	694
2864	457.455	456.652		0.16	0.16	1.29	1.03	0.36	84	84	71	2.88	1.70	100	0.041	105	104	13.7	0.55	0.82	15.51	104.9	161.7	157.8	56.3	161.2	230	73	72	71	0.036	1.001	6.819	716
2865	457.615	456.812		0.16	0.16	1.30	1.03	0.36	83	84	71	2.89	1.70	101	0.040	106	107	12.8	0.88	0.78	15.48	105.6	162.5	158.5	56.3	161.9	239	73	72	71	0.040	1.001	6.493	686
2866	457.775	456.971		0.16	0.16	1.29	1.03	0.36	84	84	71	2.89	1.70	103	0.043	103	102	12.3	0.49	0.74	15.63	106.6	163.4	159.4	56.3	162.9	247	73	72	71	0.042	1.001	6.171	659
2867	457.935	457.131		0.16	0.16	1.30	1.03	0.36	84	84	71	2.88	1.70	104	0.041	105	106	11.3	0.98	0.84	15.43	107.5	164.4	160.4	56.3	163.8	253	74	73	71	0.042	1.001	6.981	752
2868	458.095	457.290		0.16	0.16	1.29	1.03	0.36	84	84	71	2.88	1.70	105	0.042	104	104	10.8	0.50	0.76	15.53	108.6	165.5	161.4	56.3	164.9	259	74	73	71	0.040	1.001	6.327	688
2869	458.255	457.449		0.16	0.16	1.29	1.03	0.36	84	84	71	2.89	1.70	106	0.040	107	106	10.0	0.80	0.82	15.42	109.7	166.7	162.5	56.3	166.0	262	74	73	71	0.042	1.001	6.824	749
2870	458.414	457.609		0.16	0.16	1.29	1.03	0.36	84	84	71	2.89	1.70	106	0.042	103	104	9.6	0.43	0.78	15.50	110.8	167.7	163.5	56.3	167.0	265	74	73	71	0.044	1.001	6.492	720
2871	458.574	457.767		0.16	0.16	1.29	1.03	0.36	84	84	71	2.89	1.70	107	0.043	103	102	9.0	0.61	0.80	15.42	112.0	168.9	164.7	56.3	168.3	267	75	73	71	0.041	1.001	6.650	746
2872	458.733	457.926		0.16	0.16	1.28	1.03	0.36	84	84	71	2.90	1.70	108	0.040	106	107	8.5	0.53	0.78	15.54	113.1	170.1	165.8	56.3	169.4	269	75	74	71	0.044	1.001	6.498	736
2873	458.892	458.085		0.16	0.16	1.28	1.02	0.36	84	84	71	2.90	1.70	108	0.042	104	104	7.4	1.11	0.77	15.60	114.4	171.4	167.0	56.3	170.7	271	75	74	71	0.042	1.001	6.390	732
2874	459.052	458.243		0.16	0.16	1.29	1.02	0.36	84	84	71	2.89	1.70	109	0.043	103	102	6.8	0.60	0.76	15.50	115.6	172.5	168.1	56.3	171.9	272	75	74	71	0.041	1.001	6.367	737
2875	459.211	458.401		0.16	0.16	1.29	1.02	0.36	84	84	71	2.90	1.70	109	0.044	101	101	5.8	0.97	0.78	15.45	116.7	173.8	169.1	56.3	173.0	274	75	74	71	0.046	1.001	6.495	759
2876	459.370	458.560		0.16	0.16	1.29	1.01	0.36	83	84	71	2.90	1.70	109	0.043	103	103	5.3	0.47	0.72	14.17	118.3	175.1	170.3	56.3	174.5	275	76	74	71	0.044	1.001	6.010	712
2877	459.530	458.718		0.16	0.16	1.29	1.02	0.36	84	84	71	2.90	1.70	110	0.040	107	106	3.9	1.38	0.78	15.46	119.6	176.4	171.5	56.2	175.8	277	76	74	71	0.045	1.001	6.493	777
2878	459.689	458.877		0.16	0.16	1.29	1.01	0.36	84	84	71	2.91	1.70	110	0.039	108	108	3.5	0.44	0.82	10.35	120.9	177.8	172.8	56.2	177.1	278	76	75	71	0.043	1.001	6.812	824
2879	459.849	459.034		0.16	0.16	1.29	1.01	0.36	84	84	71	2.91	1.70	111	0.042	105	103	2.7	0.84	0.80	10.31	122.1	179.0	174.0	56.2	178.4	278	76	75	71	0.045	1.001	6.655	814
2880	460.008	459.192		0.16	0.16	1.28	1.02	0.36	84	84	71	2.91	1.70	111	0.041	105	105	2.3	0.34	0.80	7.22	123.5	180.5	175.3	56.3	179.7	280	76	75	71	0.043	1.001	6.656	823
2881	460.167	459.350		0.16	0.16	1.28	1.01	0.36	84	84	71	2.92	1.70	111	0.041	105	105	2.4	-0.11	0.82	9.66	124.8	181.6	176.5	56.3	181.0	281	77	75	71	0.046	1.001	6.821	852
2882	460.326	459.508		0.16	0.16	1.27	1.01	0.36	84	84	71	2.90	1.70	90	0.042	102	102	2.3	0.18	0.82	8.12	125.3	182.0	176.9	56.3	181.6	281	77	75	71	0.049	1.001	6.822	856
2883	460.486	459.667		0.16	0.16	1.27	1.01	0.36	83	84	71	2.90	1.70	86	0.045	99	98	2.1	0.15	0.80	4.80	125.5	182.2	177.1	56.3	181.8	252	76	75	71	0.035	1.001	6.655	836
2884	460.645	459.825		0.16	0.16	1.28	1.01	0.36	84	84	71	2.89	1.70	83	0.043	100	100	2.4	-0.32	0.82	7.16	125.7	182.4	177.3	56.3	182.0	234	76	75	71	0.032	1.001	6.818	858
2885	460.804	459.984		0.16	0.16	1.27	1.01	0.36	84	84	71	2.89	1.70	83	0.042	101	102	2.2	0.23	0.80	8.87	125.9	182.6	177.6	56.2	182.2	224	76	75	71	0.031	1.001	6.662	840
2886	460.964	460.142		0.16	0.16	1.28	1.00	0.36	84	84	71	2.91	1.70	79	0.043	100	99	1.7	0.49	0.80	9.05	126.1	182.7	177.7	56.2	182.3	216	75	74	71	0.030	1.001	6.657	840
2887	461.123	460.300		0.16	0.16	1.27	1.01	0.36	83	84	71	2.89	1.70	79	0.045	98	97	1.7	0.04	0.84	7.25	126.1	182.8	177.8	56.2	182.4	214	75	74	71	0.029	1.001	6.983	882
2888	461.283	460.460		0.16	0.16	1.28	1.01	0.36	83	84	71	2.90	1.70	78	0.043	101	101	1.9	-0.19	0.74	5.57	126.2	182.7	177.8	56.2	182.4	211	75	74	71	0.028	1.001	6.168	779
2889	461.442	460.617		0.16	0.16	1.28	1.01	0.36	84	84	71	2.91	1.70	77	0.046	96	95	1.7	0.12	0.72	4.48	126.2	182.8	177.9	56.2	182.4	208	75	74	71	0.029	1.001	6.006	759
2890	461.603	460.776		0.16	0.16	1.28	1.01	0.36	83	84	71	2.90	1.70	78	0.041	104	102	1.8	-0.07	0.76	5.11	126.2	182.9	177.9	56.2	182.5	205	75	74	71	0.029	1.001	6.334	801
2891	461.762	460.935		0.16	0.16	1.27	1.01	0.36	83	84	71	2.90	1.70	77	0.037	108	108	1.8	-0.05	0.82	4.48	126.2	182.9	178.0	56.3	182.5	203	74	74	71	0.028	1.001	6.820	862
2892	461.922	461.093		0.16	0.16	1.27	1.01	0.36	83	84	71	2.91	1.70	76	0.046	97	96	1.7	0.16	0.84	5.23	126.2	182.9	177.9	56.2	182.5	200	74	74	71	0.027	1.001	6.980	882
2893	462.081	461.252		0.16	0.16	1.27	1.01	0.36	83	84	71	2.89	1.70	77	0.046	96	97	1.4	0.32	0.78	3.13	126.2	182.8	177.9	56.2	182.4	199	74	74	71	0.025	1.001	6.498	821
2894	462.241	461.410		0.16	0.16	1.27	1.01	0.36	84	84	71	2.90	1.70	76	0.041	103	102	1.9	-0.50	0.78	3.91	126.1	182.8	177.8	56.2	182.4	197	74	74	71	0.025	1.001	6.497	820
2895	462.400	461.569		0.16	0.16	1.28	1.01	0.36	84	84	71	2.89	1.70	76	0.042	101	101	2.0	-0.08	0.80	3.91	126.2	182.7	177.8	56.2	182.4	194	74	74	71	0.024	1.001	6.663	842
2896	462.560	461.728		0.16	0.16	1.27	1.01	0.36	84	84	71	2.90	1.70	76	0.045	98	98	1.7	0.28	0.82	1.99	126.1	182.7	177.8	56.3	182.3	192	74	73	71	0.024	1.001	6.813	860
2897	462.719	461.886		0.16	0.16	1.28	1.01	0.36	84	84	71	2.90	1.70	76	0.038	106	106	2.0	-0.32	0.80	3.91	126.0	182.6	177.7	56.3	182.3	190	74	73	71	0.024	1.001	6.636	837
2898	462.878	462.045		0.16	0.16	1.28	1.01	0.36	84	84	71	2.89	1.70	76	0.046	96	96	1.8	0.19	0.82	5.93	126.0	182.6	177.7	56.2	182.2	187	74	73	71	0.023	1.001	6.813	860
2899	463.038	462.203		0.16	0.16	1.28	1.01	0.36	84	84	71	2.89	1.70	76	0.043	100	99	1.8	0.05	0.77	5.58	126.0	182.5	177.5	56.2	182.2	185	73	73	71	0.022	1.001	6.427	811
2900	463.198	462.362		0.16	0.16	1.28	1.01	0.36	84	84	71	2.90	1.70	76	0.039	105	105	1.9	-0.15	0.80	4.82	125.9	182.4	177.5	56.2	182.1	182	73	73	71	0.022	1.001	6.657	839
2901	463.358	462.521		0.16	0.16	1.28	1.01	0.36	84	84	71	2.89	1.70	75	0.040	104	103	1.9	0.02	0.73	9.60	125.8	182.3	177.4	56.2	182.0	180	73	73	71	0.022	1.001	6.097	768
2902	463.518	462.679		0.16	0.16	1.27	1.01	0.36	83	84	71	2.90	1.70	75	0.038	107	105	1.7	0.16	0.78	2.64	125.7	182.3	177.4	56.2	181.9	178	73	73	71	0.021	1.001	6.481	816
2903	463.677	462.838		0.16	0.16	1.28	1.01	0.36	83	84	71	2.90	1.70	75	0.041	102	102	1.9	-0.13	0.75	5.20	125.6	182.1	177.4	56.2	181.8	175	73	73	71	0.021	1.001	6.249	786
2904	463.837	462.997		0.16	0.16	1.28	1.01	0.36	84	84	71	2.91	1.70	76	0.045	98	98	1.8	0.07	0.80	6.75	125.6	182.1	177.3	56.1	181.8	173	73	73	71	0.020	1.001	6.657	837

Elapsed Time	Particulate Sampling Data																Fuel Weight, lb		Flow, gpm		Temperature Data, oF												
	Gas Meter Cubic Feet (1)	Gas Meter Cubic Feet (2)	Gas Meter Cubic Feet (amb)	Sample Rate, cfm (1)	Sample Rate, cfm (2)	Orifice dH (1)	Orifice dH (2)	Orifice dH (amb)	Meter oF (1)	Meter oF (2)	Meter oF (amb)	Meter Vac. In. Hg. (1)	Meter Vac. In. Hg. (2)	Dilution Tunnel Temp.	Dilution Tunnel dP	Pro. Rate (%) (1)	Pro. Rate (%) (2)	Scale Reading	Weight Change	Load Side Liquid Flow Rate	Boiler Side Liquid Flow Rate (optional)	Thermopile ΔT	Boiler to Heat Exch. Temp.	Heat Exch to Boiler Temp.	Inlet Load Temp.	Outlet Load Temp.	Stack	Filter (1)	Filter (2)	Ambient		Specific Heat of Inlet Water (BTU/lb-°F)	Mass Flow Rate of Inlet Water (lb/min)	Heat Output, Btu
2905	463.996	463.155		0.16	0.16	1.27	1.01	0.36	83	84	71	2.90	1.70	76	0.042	101	100	2.1	-0.35	0.78	7.73	125.5	182.0	177.2	56.2	181.7	171	73	73	71	0.020	1.001	6.495	816
2906	464.156	463.314		0.16	0.16	1.28	1.01	0.36	83	84	71	2.89	1.70	76	0.045	98	98	2.1	-0.02	0.76	6.48	125.4	181.9	177.1	56.2	181.6	169	73	72	71	0.020	1.001	6.332	795
2907	464.315	463.472		0.16	0.16	1.28	1.01	0.36	83	84	71	2.90	1.70	75	0.043	100	99	1.9	0.28	0.82	8.32	125.3	181.8	177.1	56.2	181.5	167	73	72	71	0.021	1.001	6.821	856
2908	464.475	463.631		0.16	0.16	1.27	1.01	0.36	83	84	71	2.90	1.70	76	0.045	98	98	2.3	-0.40	0.78	4.60	125.2	181.7	177.0	56.1	181.4	165	73	72	71	0.020	1.001	6.494	814
2909	464.634	463.790		0.16	0.16	1.28	1.01	0.36	83	84	71	2.90	1.70	75	0.045	97	97	1.8	0.43	0.80	9.75	125.2	181.6	176.9	56.2	181.3	163	72	72	71	0.019	1.001	6.661	835
2910	464.794	463.948		0.16	0.16	1.28	1.01	0.36	83	84	71	2.89	1.70	75	0.045	98	97	2.1	-0.32	0.76	7.78	125.0	181.5	176.9	56.2	181.1	161	72	72	71	0.019	1.001	6.334	793
2911	464.953	464.107		0.16	0.16	1.28	1.01	0.36	83	84	71	2.90	1.70	75	0.042	101	101	2.1	0.01	0.76	3.62	124.9	181.5	176.8	56.2	181.1	159	72	72	71	0.018	1.001	6.333	792
2912	465.113	464.266		0.16	0.16	1.28	1.01	0.36	83	84	71	2.91	1.70	75	0.041	103	102	2.6	-0.43	0.80	9.52	124.9	181.4	176.7	56.2	181.0	158	72	72	71	0.019	1.001	6.659	832
2913	465.273	464.424		0.16	0.16	1.28	1.01	0.36	83	84	71	2.89	1.70	75	0.044	99	98	2.2	0.40	0.78	11.63	124.7	181.3	176.6	56.2	180.9	157	72	72	71	0.019	1.001	6.496	811
2914	465.433	464.584		0.16	0.16	1.27	1.01	0.36	83	84	71	2.89	1.70	75	0.043	100	100	2.2	-0.03	0.82	11.65	124.6	181.1	176.4	56.1	180.8	155	72	72	71	0.018	1.001	6.826	852
2915	465.593	464.742		0.16	0.16	1.28	1.01	0.36	83	84	71	2.89	1.70	75	0.044	99	98	1.7	0.47	0.84	7.77	124.5	181.1	176.3	56.1	180.6	153	72	72	71	0.018	1.001	6.984	871
2916	465.752	464.900		0.16	0.16	1.28	1.01	0.36	83	84	71	2.89	1.70	75	0.044	98	98	2.5	-0.73	0.78	6.22	124.4	180.9	176.1	56.2	180.6	152	72	72	71	0.018	1.001	6.495	809
2917	465.912	465.059		0.16	0.16	1.28	1.01	0.36	83	84	71	2.90	1.70	75	0.040	104	103	1.6	0.83	0.86	3.37	124.4	180.8	176.1	56.1	180.5	150	72	72	71	0.017	1.001	7.144	890
2918	466.072	465.218		0.16	0.16	1.28	1.01	0.36	83	84	71	2.91	1.70	75	0.045	98	97	1.9	-0.28	0.78	8.35	124.2	180.7	175.9	56.1	180.4	149	72	72	71	0.017	1.001	6.497	808
2919	466.231	465.377		0.16	0.16	1.28	1.01	0.36	83	84	71	2.89	1.70	75	0.043	100	100	2.0	-0.06	0.76	6.64	124.1	180.6	175.9	56.1	180.2	148	72	72	71	0.017	1.001	6.336	787
2920	466.390	465.535		0.16	0.16	1.27	1.01	0.36	83	84	71	2.90	1.70	75	0.044	98	98	1.8	0.16	0.82	7.74	124.0	180.5	175.7	56.1	180.1	147	72	72	71	0.017	1.001	6.818	846
2921	466.550	465.694		0.16	0.16	1.28	1.01	0.36	83	84	71	2.90	1.70	75	0.047	96	95	2.0	-0.16	0.76	7.25	123.9	180.4	175.6	56.1	180.0	146	72	72	71	0.017	1.001	6.331	785
2922	466.709	465.853		0.16	0.16	1.28	1.01	0.36	83	84	71	2.89	1.70	75	0.042	101	101	2.2	-0.22	0.80	8.37	123.7	180.2	175.5	56.1	179.9	144	72	72	71	0.017	1.001	6.656	825
2923	466.869	466.011		0.16	0.16	1.28	1.01	0.36	83	84	71	2.90	1.70	75	0.039	105	104	2.4	-0.17	0.78	9.06	123.6	180.2	175.4	56.2	179.8	143	72	72	71	0.017	1.001	6.495	804
2924	467.029	466.170		0.16	0.16	1.28	1.01	0.36	83	84	71	2.90	1.70	75	0.046	97	96	2.9	-0.49	0.74	5.96	123.5	180.1	175.3	56.2	179.7	142	72	72	71	0.017	1.001	6.172	763
2925	467.189	466.329		0.16	0.16	1.29	1.01	0.36	83	84	71	2.89	1.70	75	0.044	99	99	2.2	0.67	0.78	11.57	123.4	179.9	175.2	56.2	179.6	141	72	71	71	0.017	1.001	6.498	803
2926	467.349	466.487		0.16	0.16	1.27	1.01	0.36	83	84	71	2.89	1.70	74	0.044	99	98	2.7	-0.50	0.75	5.54	123.3	179.8	175.1	56.1	179.5	139	72	71	71	0.017	1.001	6.244	771
2927	467.509	466.647		0.16	0.16	1.28	1.01	0.36	83	84	71	2.90	1.70	75	0.043	100	100	2.6	0.07	0.76	12.85	123.2	179.6	174.9	56.2	179.3	138	72	71	71	0.016	1.001	6.367	785
2928	467.668	466.805		0.16	0.16	1.28	1.01	0.36	83	84	71	2.90	1.70	75	0.044	98	98	2.1	0.56	0.83	13.22	123.1	179.6	174.9	56.1	179.2	138	72	71	71	0.016	1.001	6.915	852
2929	467.828	466.963		0.16	0.16	1.27	1.01	0.36	83	84	71	2.89	1.70	74	0.044	99	98	2.2	-0.17	0.82	10.79	123.0	179.5	174.8	56.1	179.1	136	72	71	71	0.016	1.001	6.825	841
2930	467.988	467.123		0.16	0.16	1.28	1.01	0.36	83	84	71	2.91	1.70	75	0.040	104	104	2.6	-0.33	0.81	10.26	122.9	179.4	174.7	56.1	179.1	136	71	71	71	0.016	1.001	6.728	828
2931	468.147	467.281		0.16	0.16	1.27	1.01	0.36	83	84	71	2.89	1.70	75	0.041	102	101	2.3	0.25	0.79	7.75	122.8	179.3	174.6	56.1	178.9	135	71	71	71	0.016	1.001	6.623	814
2932	468.307	467.440		0.16	0.16	1.27	1.01	0.36	83	84	70	2.89	1.70	74	0.045	98	97	2.4	-0.12	0.83	10.76	122.6	179.1	174.5	56.2	178.8	133	71	71	70	0.015	1.001	6.958	854
2933	468.466	467.598		0.16	0.16	1.28	1.01	0.36	83	84	71	2.90	1.70	75	0.046	96	96	2.9	-0.43	0.77	10.74	122.5	179.0	174.3	56.2	178.7	132	71	71	71	0.015	1.001	6.425	788
2934	468.626	467.757		0.16	0.16	1.28	1.01	0.36	83	84	71	2.89	1.70	75	0.042	101	101	2.2	0.65	0.82	10.32	122.4	178.9	174.2	56.1	178.6	132	71	71	71	0.015	1.001	6.822	836
2935	468.785	467.916		0.16	0.16	1.28	1.01	0.36	83	84	71	2.90	1.70	75	0.044	98	99	2.4	-0.19	0.74	12.21	122.3	178.8	174.1	56.1	178.4	131	71	71	71	0.015	1.001	6.168	755
2936	468.945	468.075		0.16	0.16	1.28	1.01	0.36	83	84	71	2.90	1.70	75	0.043	100	100	2.4	0.05	0.76	11.52	122.3	178.7	174.0	56.1	178.4	131	71	71	71	0.015	1.001	6.334	775
2937	469.105	468.233		0.16	0.16	1.28	1.02	0.36	83	84	70	2.89	1.70	74	0.043	100	99	2.4	-0.02	0.84	11.70	122.2	178.6	173.9	56.1	178.3	130	71	71	70	0.014	1.001	6.985	854
2938	469.265	468.392		0.16	0.16	1.27	1.01	0.36	83	84	71	2.90	1.70	74	0.044	99	98	2.3	0.03	0.74	10.36	122.1	178.5	173.9	56.1	178.2	130	71	71	71	0.015	1.001	6.174	754
2939	469.425	468.551		0.16	0.16	1.28	1.02	0.36	83	84	71	2.89	1.70	74	0.043	100	100	2.5	-0.20	0.78	9.08	121.9	178.4	173.7	56.1	178.0	130	71	71	71	0.014	1.001	6.499	793
2940	469.584	468.710		0.16	0.16	1.28	1.01	0.36	83	84	70	2.91	1.70	74	0.042	101	101	2.6	-0.08	0.80	8.82	121.9	178.3	173.7	56.1	178.0	129	71	71	70	0.014	1.001	6.661	813
2941	469.744	468.868		0.16	0.16	1.28	1.01	0.36	83	84	70	2.90	1.70	74	0.042	101	100	2.3	0.29	0.80	9.49	121.7	178.2	173.5	56.1	177.8	128	71	71	70	0.014	1.001	6.660	812
2942	469.904	469.027		0.16	0.16	1.28	1.01	0.36	83	84	70	2.89	1.70	74	0.043	100	100	2.4	-0.11	0.82	14.17	121.6	178.2	173.5	56.1	177.8	126	71	71	70	0.014	1.001	6.822	831
2943	470.063	469.186		0.16	0.16	1.27	1.01	0.36	83	84	70	2.90	1.70	75	0.044	98	99	2.7	-0.27	0.78	11.57	121.5	178.0	173.3	56.1	177.7	126	71	71	70	0.014	1.001	6.500	791
2944	470.223	469.344		0.16	0.16	1.27	1.02	0.36	83	84	70	2.90	1.70	74	0.041	103	101	2.9	-0.22	0.82	12.16	121.5	177.9	173.3	56.1	177.6	126	71	71	70	0.014	1.001	6.826	830
2945	470.382	469.504		0.16	0.16	1.28	1.02	0.36	83	84	70	2.90	1.70	75	0.041	102	103	2.8	0.15	0.80	7.23	121.3	177.8	173.2	56.1	177.4	125	71	71	70	0.014	1.001	6.662	809
2946	470.542	469.662		0.16	0.16	1.28	1.01	0.36	83	84	70	2.91	1.70	74	0.044	99	98	2.6	0.17	0.76	11.91	121.2	177.6	172.9	56.1	177.3	124	71	71	70	0.014	1.001	6.338	769
2947	470.702	469.821		0.16	0.16	1.28	1.02	0.36	83	84	70	2.89	1.70	74	0.043	100	100	2.8	-0.21	0.80	9.10	121.1	177.5	172.9	56.1	177.2	123	71	71	70	0.014	1.001	6.659	807
2948	470.862	469.980		0.16	0.16	1.28	1.01	0.36	83	84	70	2.90	1.70	74	0.039	105	105	3.0	-0.18	0.82	10.03	120.9	177.3	172.7	56.1	177.0	123	71	71	70	0.013	1.001	6.824	826
2949	471.021	470.138		0.16	0.16	1.28	1.01	0.36	83	84	70	2.90	1.70	74	0.044	98	98	2.8	0.20	0.80	10.32	120.8	177.2	172.6	56.1	176.9	122	71	71	70	0.013	1.001	6.659	805
2950	471.181	470.297		0.16	0.16	1.28	1.02	0.36	83	84	70	2.90	1.70	74	0.041	103	102	2.7	0.06	0.78	8.33	120.8	177.2	172.7	56.1	176.9	122	71	71	70	0.013	1.001	6.499	786
2951	471.341	470.456		0.16	0.16	1.28	1.01	0.36	83	84	70	2.89	1.70	74	0.044	99	98	2.8	-0.06	0.80	9.17	120.6	177.1	172.5	56.1	176.7	122	71	71	70	0.013	1.001	6.662	805
2952	471.501	470.614		0.16	0.16	1.28	1.01	0.36	83	84	70	2.91	1.70	83	0.043	101	100	2.9	-0.11	0.78	14.10	120.5	176.9	172.4	56.1	176.6	121	71	71	70	0.013	1.001	6.499	784
2953	471.661	470.774		0.16	0.16	1.29	1.02	0.36	83	84	70	2.88	1.70	76	0.041	103	103	2.9	0.06	0.74	12.90	120.5	176.9	172.3	56.1	176.6	158	71	71	70	0.032	1.001	6.184	746
2954	471.821	470.933		0.16	0.16	1.28	1.02	0.36	83	84	70	2.88	1.70	75	0.044	99	99	2.7	0.12	0.84	9.08	120.3	176.8	172.2	56.1	176.4	148	71	71	70	0.016	1.001	6.988	842
2955	471.980	471.092		0.16	0.16	1.28	1.02	0.36	83	84	70	2.90	1.70	75	0.040	103	103	2.9	-0.20	0.80	14.33	120.2	176.7	172.1	56.1	176.3	139	71	71	70	0.015	1.001	6.642	799
2956	472.140	471.252		0.16	0.16	1.28	1.02	0.36	83	84	70	2.90	1.70	74	0.043	100	100	2.8	0.16	0.81	10.04	120.1	176.6	172.0	56.1	176.2	133	71	71	70	0.014	1.001	6.748	811
2957	472.300	471.410		0.16	0.16	1.28	1.02	0.36	83	84	70	2.88	1.70	74	0.039	105	104	2.5	0.31	0.82	10.33	120.0	176.5	172.0	56.1	176.2	130	71	71	70	0.014	1.001	6.850	823
2958	472.460	471.570		0.16	0.16	1.28	1.02	0.36	83	84	70	2.88	1.70	74	0.044	99	99	2.7	-0.21	0.79	12.87	119.9	176.4	171.9	56.1	176.1	127	71	71	70	0.014	1.001	6.615	794
2959	472.619	471.729		0.16	0.16	1.29	1.02	0.36	83	84	70	2.88	1.70	74	0.043	100	100	2.8	-0.17	0.82	12.15	119.8	176.2	171.7	56.1	175.9	125	71	71	70	0.013	1.001	6.867	824
2960	472.779	471.888		0.16	0.16	1.28	1.02	0.36	83	84	70	2.88	1.70	74	0.045	98	97	2.8	0.03	0.76	11.66	119.7	176.1	171.7	56.1	175.8	124	71	71	70	0.012	1.001	6.340	760
2961	472.939	472.047		0.16	0.16	1.29	1.02	0.36	83	84	70	2.88	1.70	74	0.043	100	100	2.8	0.06	0.78	12.84	119.6	176.0	171.5	56.1	175.7	122	71	71	70	0.012	1.001	6.502	778
2962	473.099	472.207		0.16	0.16	1.29	1.02	0.36	83	84	70	2.89	1.70	74	0.044	99	99	2.2	0.51	0.80	12.70	119.5	175.9	171.4	56.1	175.6	122	71	71	70	0.012	1.001	6.662	797
2963	473.259	472.366		0.16	0.16	1.28	1.02	0.36	83	84	70	2.89	1.70	74	0.046	97	96	2.6	-0.38	0.82	11.86	119.4	175.8	171.3	56.1	175.5	122	71	71	70	0.012	1.001	6.823	816
2964	473.420	472.525		0.16	0.16	1.29	1.02	0.36	83	84	70	2.88	1.70	74	0.044	100	98	2.4	0.23	0.76	11.65	119.3	175.7	171.2	56.1	175.4	121	71	71	70	0.012	1.001	6.342	757
2965	473.580	472.685		0.16	0.16	1.27	1.02	0.36	83	84	70	2.89	1.70	75	0.042	101	102	2.4	-0.02	0.76	11.72	119.2	175.6	171.1	56.1	175.3	120	71	71	70	0.011	1.001	6.341	757
2966	473.740	472.844		0.16	0.16	1.28	1.02	0.36	83	84	70	2.89	1.70	74	0.044	99	98	2.7	-0.30	0.82	12.91	119.0	175.5	170.9	56.1	175.1	119	71	71	70	0.012	1.001	6.827	813

Elapsed Time	Particulate Sampling Data																	Fuel Weight, lb		Flow, gpm		Temperature Data, oF													
	Gas Meter Cubic Feet (1)	Gas Meter Cubic Feet (2)	Gas Meter Cubic Feet (amb)	Sample Rate, cfm (1)	Sample Rate, cfm (2)	Orifice dH (1)	Orifice dH (2)	Orifice dH (amb)	Meter oF (1)	Meter oF (2)	Meter oF (amb)	Meter Vac. In. Hg. (1)	Meter Vac. In. Hg. (2)	Dilution Tunnel Temp.	Dilution Tunnel dP	Pro. Rate (%) (1)	Pro. Rate (%) (2)	Scale Reading	Weight Change	Load Side Liquid Flow Rate	Boiler Side Liquid Flow Rate (optional)	Thermopile ΔT	Boiler to Heat Exch. Temp.	Heat Exch to Boiler Temp.	Inlet Load Temp.	Outlet Load Temp.	Stack	Filter (1)	Filter (2)	Ambient		Specific Heat of Inlet Water (BTU/lb-°F)	Mass Flow Rate of Inlet Water (lb/min)	Heat Output, Btu
2967	473.900	473.004		0.16	0.16	1.29	1.02	0.36	83	84	70	2.90	1.70	74	0.047	96	96	2.7	-0.01	0.80	10.73	118.9	175.3	170.8	56.1	175.0	120	71	71	70	0.012	1.001	6.662	793
2968	474.060	473.162		0.16	0.16	1.28	1.02	0.36	83	84	70	2.88	1.70	74	0.042	101	100	2.5	0.26	0.82	12.87	118.8	175.2	170.7	56.1	174.9	120	71	71	70	0.011	1.001	6.824	812
2969	474.220	473.321		0.16	0.16	1.28	1.02	0.36	83	84	70	2.89	1.70	74	0.044	99	98	2.8	-0.31	0.80	10.88	118.7	175.2	170.7	56.1	174.8	119	71	71	70	0.011	1.001	6.665	792
2970	474.379	473.482		0.16	0.16	1.29	1.02	0.36	83	84	70	2.90	1.70	74	0.042	101	102	2.8	-0.06	0.78	12.73	118.5	175.0	170.5	56.1	174.6	118	71	71	70	0.011	1.001	6.498	771
2971	474.539	473.640		0.16	0.16	1.28	1.02	0.36	83	84	70	2.88	1.70	74	0.041	103	101	2.4	0.47	0.78	14.89	118.5	174.9	170.5	56.1	174.6	118	71	71	70	0.011	1.001	6.499	771
2972	474.699	473.799		0.16	0.16	1.28	1.02	0.36	83	84	70	2.90	1.70	74	0.044	99	98	3.0	-0.64	0.80	14.34	118.3	174.7	170.3	56.1	174.4	116	71	71	70	0.011	1.001	6.662	789
2973	474.859	473.959		0.16	0.16	1.28	1.02	0.36	83	84	70	2.88	1.70	74	0.045	98	98	2.3	0.70	0.80	14.19	118.2	174.6	170.1	56.1	174.3	117	71	71	70	0.011	1.001	6.667	789
2974	475.019	474.118		0.16	0.16	1.28	1.02	0.36	83	84	70	2.88	1.70	74	0.045	98	97	2.5	-0.14	0.80	14.17	118.1	174.5	170.0	56.1	174.1	116	71	71	70	0.011	1.001	6.662	787
2975	475.179	474.277		0.16	0.16	1.28	1.02	0.36	83	84	70	2.88	1.70	74	0.044	99	98	2.9	-0.44	0.76	14.31	118.0	174.4	170.0	56.1	174.0	116	71	71	70	0.011	1.001	6.342	749
2976	475.339	474.437		0.16	0.16	1.28	1.02	0.36	83	84	70	2.89	1.70	74	0.040	104	104	2.8	0.11	0.76	15.45	117.8	174.3	169.8	56.1	173.9	115	71	71	70	0.011	1.001	6.344	748
2977	475.499	474.595		0.16	0.16	1.28	1.02	0.36	83	84	70	2.89	1.70	74	0.041	103	101	2.9	-0.12	0.78	12.81	117.8	174.2	169.8	56.1	173.8	114	71	71	70	0.011	1.001	6.506	767
2978	475.659	474.755		0.16	0.16	1.29	1.02	0.36	83	84	70	2.89	1.70	74	0.043	100	100	2.7	0.18	0.78	15.52	117.5	174.0	169.6	56.1	173.6	114	71	71	70	0.010	1.001	6.508	766
2979	475.819	474.914		0.16	0.16	1.29	1.02	0.36	83	84	70	2.88	1.70	74	0.043	100	100	3.1	-0.34	0.80	15.41	117.5	173.9	169.5	56.1	173.6	114	71	71	70	0.010	1.001	6.665	784
2980	475.979	475.073		0.16	0.16	1.27	1.02	0.36	83	84	70	2.88	1.70	74	0.042	101	101	2.8	0.22	0.84	15.51	117.4	173.8	169.4	56.1	173.4	113	71	71	70	0.011	1.001	6.989	821
2981	476.139	475.233		0.16	0.16	1.28	1.02	0.36	83	84	70	2.89	1.70	74	0.042	101	101	3.3	-0.42	0.82	14.15	117.3	173.7	169.2	56.1	173.3	113	71	71	70	0.010	1.001	6.830	802
2982	476.299	475.391		0.16	0.16	1.28	1.02	0.36	83	84	70	2.88	1.70	74	0.041	103	101	2.6	0.69	0.78	13.74	117.1	173.5	169.0	56.1	173.2	114	71	70	70	0.010	1.001	6.497	762
2983	476.459	475.550		0.16	0.16	1.28	1.02	0.36	83	84	70	2.89	1.70	82	0.042	102	102	2.6	-0.04	0.82	15.38	116.9	173.4	168.9	56.1	173.0	113	71	71	70	0.011	1.001	6.832	800
2984	476.618	475.710		0.16	0.16	1.28	1.02	0.36	83	84	70	2.89	1.70	75	0.046	96	97	2.8	-0.15	0.82	15.47	116.9	173.4	168.9	56.1	173.0	153	71	71	70	0.041	1.001	6.824	799
2985	476.778	475.869		0.16	0.16	1.29	1.02	0.36	83	84	70	2.90	1.70	74	0.043	100	100	2.8	-0.02	0.82	14.21	116.8	173.2	168.7	56.1	172.9	139	71	71	70	0.013	1.001	6.799	795
2986	476.938	476.028		0.16	0.16	1.28	1.02	0.36	83	84	70	2.89	1.70	74	0.044	99	98	2.6	0.20	0.78	11.65	116.6	173.0	168.5	56.1	172.7	130	71	71	70	0.012	1.001	6.507	760
2987	477.098	476.188		0.16	0.16	1.28	1.02	0.36	83	84	70	2.89	1.70	74	0.045	98	98	3.1	-0.49	0.81	14.28	116.5	172.9	168.4	56.1	172.6	125	71	71	70	0.012	1.001	6.779	791
2988	477.258	476.347		0.16	0.16	1.29	1.02	0.36	83	84	70	2.89	1.70	74	0.043	100	100	2.8	0.33	0.83	15.55	116.5	172.9	168.4	56.1	172.6	122	71	71	70	0.011	1.001	6.895	804
2989	477.417	476.506		0.16	0.16	1.28	1.02	0.36	83	84	70	2.89	1.70	74	0.040	103	103	2.6	0.13	0.82	14.22	116.3	172.7	168.3	56.1	172.4	121	71	71	70	0.011	1.001	6.829	795
2990	477.577	476.665		0.16	0.16	1.29	1.01	0.36	83	84	70	2.90	1.70	74	0.043	100	100	2.7	-0.06	0.74	15.48	116.2	172.6	168.2	56.0	172.3	119	71	71	70	0.011	1.001	6.176	719
2991	477.737	476.824		0.16	0.16	1.28	1.02	0.36	83	84	70	2.89	1.70	74	0.043	100	100	2.8	-0.10	0.79	13.08	116.1	172.5	168.1	56.0	172.2	118	71	71	70	0.011	1.001	6.622	770
2992	477.898	476.984		0.16	0.16	1.29	1.02	0.36	83	84	70	2.88	1.70	74	0.044	100	99	2.8	-0.02	0.76	14.23	116.0	172.4	168.0	56.1	172.1	117	71	71	70	0.011	1.001	6.342	737
2993	478.058	477.143		0.16	0.16	1.29	1.02	0.36	83	84	70	2.89	1.70	74	0.044	99	98	2.6	0.21	0.84	15.54	115.8	172.2	167.8	56.1	171.9	116	71	71	70	0.011	1.001	6.990	810
2994	478.218	477.302		0.16	0.16	1.29	1.02	0.36	83	84	70	2.89	1.70	74	0.043	100	100	2.9	-0.33	0.78	15.40	115.8	172.2	167.8	56.0	171.9	116	71	71	70	0.011	1.001	6.504	754
2995	478.378	477.462		0.16	0.16	1.29	1.02	0.36	83	84	70	2.88	1.70	74	0.043	100	100	2.8	0.17	0.82	15.49	115.6	172.0	167.6	56.0	171.7	115	71	71	70	0.010	1.001	6.826	790
2996	478.538	477.620		0.16	0.16	1.28	1.02	0.36	83	84	70	2.90	1.70	74	0.041	103	101	2.8	-0.02	0.82	15.40	115.5	171.9	167.5	56.0	171.6	114	71	70	70	0.010	1.001	6.834	790
2997	478.698	477.779		0.16	0.16	1.28	1.02	0.36	83	84	70	2.88	1.70	74	0.042	101	101	2.7	0.04	0.86	14.52	115.4	171.8	167.4	56.0	171.4	114	71	71	70	0.010	1.001	7.152	826
2998	478.857	477.939		0.16	0.16	1.28	1.02	0.36	83	84	70	2.89	1.70	74	0.043	100	100	2.8	-0.05	0.74	15.49	115.2	171.7	167.3	56.1	171.3	114	71	71	70	0.010	1.001	6.181	713
2999	479.017	478.098		0.16	0.16	1.28	1.02	0.36	83	84	70	2.89	1.70	74	0.042	101	101	2.8	0.00	0.76	14.77	115.1	171.5	167.2	56.1	171.2	113	71	71	70	0.010	1.001	6.341	731
3000	479.177	478.257		0.16	0.16	1.29	1.02	0.36	83	84	70	2.88	1.70	74	0.044	99	98	2.8	-0.06	0.76	15.48	115.0	171.4	167.0	56.1	171.1	113	71	71	70	0.010	1.001	6.343	730
3001	479.337	478.417		0.16	0.16	1.29	1.02	0.36	83	84	70	2.89	1.70	74	0.043	100	100	2.8	0.06	0.80	14.66	114.9	171.3	166.9	56.1	170.9	113	71	70	70	0.009	1.001	6.664	766
3002	479.496	478.575		0.16	0.16	1.28	1.02	0.36	83	84	70	2.88	1.70	74	0.040	103	103	2.7	0.11	0.78	15.51	114.8	171.2	166.8	56.1	170.8	112	71	70	70	0.009	1.001	6.501	747
3003	479.656	478.735		0.16	0.16	1.29	1.02	0.36	83	84	70	2.88	1.70	74	0.040	104	104	2.9	-0.23	0.80	14.83	114.7	171.1	166.8	56.0	170.7	111	71	70	70	0.009	1.001	6.668	766
3004	479.817	478.894		0.16	0.16	1.29	1.02	0.36	83	84	70	2.88	1.70	74	0.041	103	102	2.8	0.07	0.74	15.52	114.5	170.9	166.6	56.0	170.6	112	71	70	70	0.010	1.001	6.179	709
3005	479.976	479.054		0.16	0.16	1.29	1.02	0.36	83	84	70	2.89	1.70	74	0.044	98	99	2.8	-0.02	0.82	15.56	114.4	170.8	166.5	56.1	170.5	111	71	70	70	0.009	1.001	6.826	782
3006	480.137	479.214		0.16	0.16	1.29	1.02	0.36	83	84	70	2.89	1.70	74	0.041	103	103	2.9	-0.04	0.76	15.55	114.3	170.7	166.3	56.0	170.3	110	71	70	70	0.010	1.001	6.342	726
3007	480.297	479.372		0.16	0.16	1.28	1.02	0.36	83	84	70	2.88	1.70	74	0.043	100	99	2.9	0.03	0.82	15.53	114.2	170.6	166.2	56.1	170.2	110	71	70	70	0.009	1.001	6.829	781
3008	480.457	479.531		0.16	0.16	1.29	1.02	0.36	83	84	70	2.88	1.70	74	0.044	99	98	2.8	0.03	0.78	15.54	114.0	170.4	166.0	56.0	170.1	110	71	70	70	0.009	1.001	6.501	742
3009	480.617	479.692		0.16	0.16	1.29	1.02	0.36	83	84	70	2.88	1.70	74	0.044	99	100	2.6	0.26	0.76	15.45	113.9	170.3	166.0	56.0	169.9	109	71	70	70	0.009	1.001	6.347	724
3010	480.777	479.850		0.16	0.16	1.29	1.02	0.36	83	84	70	2.89	1.70	74	0.040	104	103	2.9	-0.31	0.78	15.52	113.8	170.2	165.8	56.0	169.8	110	71	70	70	0.009	1.001	6.504	741
3011	480.937	480.009		0.16	0.16	1.28	1.02	0.36	83	84	70	2.89	1.70	74	0.044	99	98	2.8	0.12	0.82	15.55	113.7	170.1	165.8	56.0	169.8	109	71	70	70	0.009	1.001	6.815	776
3012	481.097	480.169		0.16	0.16	1.28	1.02	0.36	83	84	70	2.88	1.70	74	0.042	101	101	2.8	-0.02	0.80	15.55	113.5	169.9	165.5	56.1	169.6	108	71	70	70	0.009	1.001	6.670	758
3013	481.256	480.328		0.16	0.16	1.29	1.02	0.36	83	84	70	2.89	1.70	74	0.045	97	97	2.5	0.25	0.80	15.56	113.4	169.8	165.4	56.1	169.5	108	71	70	70	0.009	1.001	6.650	755
3014	481.416	480.487		0.16	0.16	1.28	1.03	0.36	83	84	70	2.89	1.70	75	0.043	100	100	2.5	0.00	0.77	15.40	113.3	169.7	165.3	56.1	169.3	108	71	70	70	0.009	1.001	6.390	725
3015	481.576	480.647		0.16	0.16	1.28	1.02	0.36	83	84	70	2.88	1.70	74	0.044	99	99	3.4	-0.87	0.80	15.46	113.2	169.5	165.1	56.0	169.2	131	71	70	70	0.012	1.001	6.687	758
3016	481.736	480.805		0.16	0.16	1.29	1.02	0.36	83	84	70	2.89	1.70	74	0.045	98	97	3.0	0.40	0.80	15.47	113.0	169.5	165.1	56.0	169.1	122	71	70	70	0.009	1.001	6.682	756
3017	481.896	480.965		0.16	0.16	1.29	1.02	0.36	83	84	70	2.88	1.70	74	0.044	99	99	3.0	-0.06	0.78	15.51	113.0	169.3	165.0	56.0	169.0	117	71	70	70	0.008	1.001	6.486	734
3018	482.056	481.124		0.16	0.16	1.29	1.02	0.36	83	84	70	2.89	1.70	74	0.043	100	100	3.0	0.04	0.78	15.55	112.8	169.2	164.8	56.0	168.8	113	71	70	70	0.009	1.001	6.502	734
3019	482.216	481.283		0.16	0.16	1.29	1.03	0.36	83	84	70	2.88	1.70	74	0.041	103	102	2.8	0.22	0.70	15.52	112.8	169.1	164.7	56.0	168.8	111	71	70	70	0.009	1.001	5.854	661
3020	482.376	481.444		0.16	0.16	1.29	1.02	0.36	83	84	70	2.89	1.70	74	0.041	103	103	3.0	-0.20	0.74	15.45	112.6	169.0	164.6	56.0	168.6	111	71	70	70	0.009	1.001	6.151	693
3021	482.536	481.602		0.16	0.16	1.29	1.02	0.36	83	84	70	2.89	1.70	74	0.045	98	97	3.2	-0.24	0.78	15.54	112.4	168.9	164.5	56.0	168.5	111	71	70	70	0.008	1.001	6.504	732
3022	482.697	481.761		0.16	0.16	1.28	1.02	0.36	83	84	70	2.88	1.70	74	0.046	97	96	2.9	0.39	0.78	15.52	112.3	168.7	164.4	56.0	168.4	110	71	70	70	0.009	1.001	6.505	732
3023	482.857	481.921		0.16	0.16	1.28	1.02	0.36	83	84	70	2.90	1.70	74	0.044	99	99	3.0	-0.14	0.76	15.44	112.1	168.6	164.2	56.2	168.3	109	71	70	70	0.008	1.001	6.336	711
3024	483.016	482.080		0.16	0.16	1.28	1.02	0.36	83	84	70	2.89	1.70	74	0.042	101	101	3.0	0.01	0.78	15.49	112.1	168.4	164.1	56.0	168.1	108	71	70	70	0.009	1.001	6.501	730
3025	483.176	482.239		0.16	0.16	1.28	1.02	0.36	83	84	70	2.88	1.70	74	0.045	98	97	2.8	0.23	0.80	15.52	112.0	168.3	164.1	56.0	168.0	109	71	70	70	0.008	1.001	6.670	748
3026	483.337	482.399		0.16	0.16	1.28	1.02	0.36	83	84	70	2.90	1.70	74	0.043	101	100	3.0	-0.25	0.80	15.44	111.9	168.2	163.9	56.0	167.9	108	71	70	70	0.008	1.001	6.664	746
3027	483.496	482.558		0.16	0.16	1.28	1.02	0.36	83	84	70	2.89	1.70	74	0.038	106	106	3.1	-0.15	0.78	15.45	111.7	168.1	163.7	56.0	167.7	108	71	70	70	0.009	1.001	6.499	727
3028	483.656	482.717		0.16	0.16	1.29	1.02	0.36	83	84	70	2.88	1.70	74	0.042	101	101	2.8	0.34	0.76	15.45	111.7	168.0	163.7	56.0	167.7	107	71	70	70	0.008	1.001	6.338	708

Elapsed Time	Particulate Sampling Data																	Fuel Weight, lb		Flow, gpm		Temperature Data, oF													
	Gas Meter Cubic Feet (1)	Gas Meter Cubic Feet (2)	Gas Meter Cubic Feet (amb)	Sample Rate, cfm (1)	Sample Rate, cfm (2)	Orifice dH (1)	Orifice dH (2)	Orifice dH (amb)	Meter oF (1)	Meter oF (2)	Meter oF (amb)	Meter Vac. In. Hg. (1)	Meter Vac. In. Hg. (2)	Dilution Tunnel Temp.	Dilution Tunnel dP	Pro. Rate (%) (1)	Pro. Rate (%) (2)	Scale Reading	Weight Change	Load Side Liquid Flow Rate	Boiler Side Liquid Flow Rate (optional)	Thermopile ΔT	Boiler to Heat Exch. Temp.	Heat Exch to Boiler Temp.	Inlet Load Temp.	Outlet Load Temp.	Stack	Filter (1)	Filter (2)	Ambient		Specific Heat of Inlet Water (BTU/lb-°F)	Mass Flow Rate of Inlet Water (lb/min)	Heat Output, Btu
3029	483.816	482.877		0.16	0.16	1.28	1.02	0.36	83	84	70	2.88	1.70	74	0.043	100	100	2.8	0.05	0.80	15.46	111.5	167.8	163.6	56.0	167.5	107	71	70	70	0.009	1.001	6.667	744
3030	483.975	483.035		0.16	0.16	1.28	1.02	0.36	83	84	70	2.88	1.70	74	0.047	95	95	2.8	-0.01	0.76	15.42	111.4	167.7	163.6	56.0	167.5	107	71	70	70	0.008	1.001	6.344	708
3031	484.135	483.195		0.16	0.16	1.29	1.02	0.36	83	84	70	2.89	1.70	74	0.044	99	99	3.3	-0.54	0.74	15.41	111.3	167.6	163.4	56.0	167.3	108	71	70	70	0.009	1.001	6.180	688
3032	484.295	483.354		0.16	0.16	1.28	1.02	0.36	83	84	70	2.88	1.70	74	0.042	101	101	3.2	0.11	0.78	15.45	111.2	167.5	163.3	56.0	167.2	107	71	70	70	0.008	1.001	6.503	724
3033	484.455	483.513		0.16	0.16	1.28	1.02	0.36	83	84	70	2.90	1.70	74	0.042	101	101	3.3	-0.08	0.82	15.44	110.9	167.3	163.1	56.1	167.0	107	71	70	70	0.009	1.001	6.829	758
3034	484.615	483.673		0.16	0.16	1.29	1.02	0.36	83	84	70	2.89	1.70	74	0.042	101	101	2.7	0.61	0.82	15.52	110.8	167.2	162.9	56.0	166.8	107	71	70	70	0.008	1.001	6.827	757
3035	484.775	483.832		0.16	0.16	1.29	1.02	0.36	83	84	70	2.88	1.70	74	0.042	101	101	2.8	-0.10	0.78	15.51	110.7	167.1	162.9	56.0	166.7	107	71	70	70	0.008	1.001	6.505	721
3036	484.936	483.991		0.16	0.16	1.29	1.02	0.36	83	84	70	2.89	1.70	74	0.044	100	98	2.5	0.23	0.80	15.47	110.7	167.0	162.8	56.0	166.7	107	71	70	70	0.008	1.001	6.664	738
3037	485.096	484.151		0.16	0.16	1.28	1.02	0.36	83	84	70	2.89	1.70	74	0.043	100	100	2.9	-0.37	0.76	15.49	110.5	166.8	162.7	56.0	166.5	106	70	70	70	0.009	1.001	6.343	702
3038	485.256	484.310		0.16	0.16	1.28	1.02	0.36	83	84	70	2.89	1.70	74	0.043	100	100	2.5	0.36	0.82	15.48	110.3	166.6	162.5	56.0	166.3	106	70	70	70	0.009	1.001	6.831	754
3039	485.416	484.469		0.16	0.16	1.28	1.02	0.36	83	84	70	2.88	1.70	74	0.042	101	101	2.8	-0.28	0.74	15.44	110.3	166.6	162.5	56.0	166.2	107	70	70	70	0.009	1.001	6.189	683
3040	485.576	484.629		0.16	0.16	1.28	1.02	0.36	83	84	70	2.88	1.70	73	0.044	99	99	3.1	-0.24	0.76	15.51	110.2	166.4	162.4	56.0	166.2	106	70	70	70	0.008	1.001	6.347	700
3041	485.735	484.788		0.16	0.16	1.28	1.02	0.36	83	84	70	2.88	1.70	74	0.042	101	101	2.9	0.20	0.78	15.49	110.0	166.3	162.2	56.0	166.0	106	70	70	70	0.008	1.001	6.480	714
3042	485.895	484.947		0.16	0.16	1.29	1.02	0.36	83	84	70	2.88	1.70	74	0.042	101	101	2.7	0.14	0.76	15.49	109.9	166.2	162.1	56.0	165.9	106	70	70	70	0.008	1.001	6.350	699
3043	486.055	485.106		0.16	0.16	1.29	1.02	0.36	83	84	70	2.89	1.70	74	0.045	98	97	2.6	0.09	0.80	15.50	109.8	166.1	162.0	56.0	165.8	106	70	70	70	0.009	1.001	6.669	733
3044	486.215	485.265		0.16	0.16	1.29	1.02	0.36	83	84	70	2.89	1.70	74	0.045	98	97	2.7	-0.05	0.80	15.58	109.6	165.9	161.8	56.0	165.6	105	70	70	70	0.008	1.001	6.670	732
3045	486.374	485.425		0.16	0.16	1.29	1.02	0.36	83	84	70	2.89	1.70	74	0.046	96	97	2.8	-0.14	0.77	15.49	109.5	165.8	161.7	56.0	165.5	104	70	70	70	0.008	1.001	6.413	703
3046	486.535	485.584		0.16	0.16	1.29	1.02	0.36	83	84	70	2.90	1.70	74	0.040	104	103	3.2	-0.33	0.72	15.47	109.4	165.7	161.6	56.0	165.4	122	70	70	70	0.008	1.001	6.016	659
3047	486.695	485.743		0.16	0.16	1.29	1.02	0.36	83	84	70	2.89	1.70	74	0.044	99	98	2.7	0.44	0.82	15.47	109.3	165.5	161.5	56.0	165.3	115	70	70	70	0.007	1.001	6.838	748
3048	486.854	485.903		0.16	0.16	1.29	1.02	0.36	83	84	70	2.90	1.70	74	0.045	97	98	2.8	-0.07	0.81	15.52	109.2	165.4	161.3	56.0	165.1	111	70	70	70	0.007	1.001	6.734	736
3049	487.015	486.062		0.16	0.16	1.29	1.02	0.36	83	84	70	2.88	1.70	74	0.042	102	101	3.0	-0.21	0.80	15.47	109.0	165.3	161.2	56.0	165.0	109	70	70	70	0.007	1.001	6.664	727
3050	487.175	486.221		0.16	0.16	1.29	1.02	0.36	83	84	70	2.89	1.70	74	0.043	100	100	3.4	-0.41	0.82	15.48	108.8	165.2	161.0	56.0	164.8	108	70	70	70	0.008	1.001	6.827	744
3051	487.335	486.381		0.16	0.16	1.28	1.02	0.36	83	84	70	2.89	1.70	74	0.044	99	99	2.6	0.84	0.82	15.50	108.7	165.0	160.9	56.0	164.7	107	70	70	70	0.008	1.001	6.826	743
3052	487.495	486.540		0.16	0.16	1.29	1.02	0.36	83	84	70	2.89	1.70	74	0.044	99	98	3.2	-0.58	0.74	15.39	108.6	164.9	160.8	56.0	164.6	106	70	70	70	0.008	1.001	6.176	672
3053	487.655	486.699		0.16	0.16	1.29	1.02	0.36	83	84	70	2.89	1.70	74	0.040	104	103	3.0	0.11	0.84	15.42	108.5	164.8	160.7	56.0	164.5	106	70	70	70	0.007	1.001	6.987	759
3054	487.815	486.859		0.16	0.16	1.29	1.02	0.36	83	84	70	2.89	1.70	74	0.043	100	100	3.4	-0.32	0.78	15.50	108.3	164.6	160.5	56.0	164.3	105	70	70	70	0.007	1.001	6.506	706
3055	487.975	487.018		0.16	0.16	1.28	1.02	0.36	83	84	70	2.88	1.70	74	0.046	97	96	3.0	0.39	0.78	15.48	108.2	164.5	160.4	56.0	164.2	105	70	70	70	0.007	1.001	6.504	705
3056	488.135	487.177		0.16	0.16	1.28	1.02	0.36	83	84	70	2.88	1.70	73	0.044	99	98	2.8	0.17	0.76	15.50	108.1	164.4	160.4	56.0	164.1	104	70	70	70	0.008	1.001	6.337	686
3057	488.295	487.337		0.16	0.16	1.28	1.02	0.36	83	83	70	2.90	1.70	73	0.042	101	102	3.2	-0.34	0.84	15.53	108.0	164.3	160.2	56.0	164.0	104	70	70	70	0.008	1.001	6.991	756
3058	488.455	487.495		0.16	0.16	1.29	1.02	0.36	83	84	70	2.88	1.70	74	0.042	101	100	2.5	0.65	0.84	15.52	107.8	164.1	160.1	56.0	163.8	105	70	70	70	0.007	1.001	6.995	755
3059	488.615	487.656		0.16	0.16	1.29	1.02	0.36	83	84	70	2.89	1.70	73	0.042	101	102	3.2	-0.71	0.76	15.48	107.7	164.0	159.9	56.0	163.7	105	70	70	70	0.008	1.001	6.344	684
3060	488.774	487.814		0.16	0.16	1.29	1.02	0.36	83	84	70	2.89	1.70	74	0.042	101	100	3.1	0.10	0.76	15.43	107.6	163.9	159.8	56.0	163.7	105	70	70	70	0.008	1.001	6.340	683
3061	488.934	487.973		0.16	0.16	1.29	1.03	0.36	83	83	70	2.88	1.70	73	0.043	100	100	2.9	0.18	0.82	15.57	107.5	163.8	159.7	56.0	163.5	105	70	70	70	0.008	1.001	6.825	735
3062	489.094	488.134		0.16	0.16	1.29	1.02	0.36	83	83	70	2.88	1.70	74	0.041	103	103	2.7	0.21	0.78	15.53	107.4	163.7	159.6	56.0	163.3	105	70	70	70	0.008	1.001	6.506	699
3063	489.254	488.292		0.16	0.16	1.29	1.02	0.36	83	83	70	2.89	1.70	74	0.042	101	100	3.2	-0.44	0.76	15.44	107.2	163.5	159.5	56.0	163.2	103	70	70	70	0.008	1.001	6.340	681
3064	489.414	488.451		0.16	0.16	1.29	1.02	0.36	83	83	70	2.88	1.70	74	0.043	100	100	3.1	0.06	0.82	15.52	107.1	163.3	159.3	56.0	163.0	103	70	70	70	0.008	1.001	6.825	732
3065	489.575	488.611		0.16	0.16	1.28	1.02	0.36	83	83	70	2.89	1.70	74	0.044	100	99	3.0	0.12	0.78	15.51	107.0	163.3	159.3	56.0	163.0	104	70	70	70	0.008	1.001	6.503	697
3066	489.735	488.770		0.16	0.16	1.28	1.02	0.36	83	83	70	2.88	1.70	74	0.044	99	99	3.1	-0.08	0.80	15.54	106.8	163.1	159.1	56.0	162.8	103	70	70	70	0.008	1.001	6.663	713
3067	489.894	488.929		0.16	0.16	1.29	1.02	0.36	83	83	70	2.89	1.70	73	0.044	98	99	3.2	-0.18	0.78	15.44	106.7	163.0	159.0	56.0	162.7	104	70	70	70	0.007	1.001	6.505	695
3068	490.055	489.089		0.16	0.16	1.29	1.02	0.36	83	83	70	2.88	1.70	74	0.043	101	100	3.1	0.19	0.84	15.45	106.6	162.9	158.9	56.0	162.6	103	70	70	70	0.008	1.001	6.991	746
3069	490.214	489.248		0.16	0.16	1.28	1.02	0.36	83	83	70	2.89	1.70	74	0.041	102	102	2.9	0.11	0.82	15.42	106.4	162.7	158.7	56.0	162.4	103	70	70	70	0.008	1.001	6.822	727
3070	490.374	489.407		0.16	0.16	1.29	1.02	0.36	83	83	70	2.88	1.70	73	0.042	101	101	3.3	-0.39	0.82	15.49	106.3	162.6	158.6	56.0	162.3	103	70	70	70	0.007	1.001	6.825	726
3071	490.534	489.567		0.16	0.16	1.28	1.02	0.36	83	83	70	2.88	1.70	73	0.039	105	105	3.2	0.15	0.80	15.40	106.2	162.6	158.5	56.0	162.2	102	70	70	70	0.008	1.001	6.665	709
3072	490.694	489.726		0.16	0.16	1.28	1.02	0.36	83	83	70	2.88	1.70	74	0.042	101	101	3.0	0.16	0.74	15.47	106.1	162.3	158.3	55.9	162.0	103	70	70	70	0.007	1.001	6.187	657
3073	490.854	489.886		0.16	0.16	1.28	1.02	0.36	83	83	70	2.89	1.70	74	0.042	101	102	3.2	-0.15	0.70	15.46	106.0	162.2	158.2	55.9	161.9	102	70	70	70	0.007	1.001	5.850	621
3074	491.013	490.044		0.16	0.16	1.29	1.02	0.36	83	83	70	2.89	1.70	74	0.042	101	100	3.6	-0.41	0.79	15.47	105.8	162.1	158.1	56.0	161.8	102	70	70	70	0.008	1.001	6.622	702
3075	491.173	490.203		0.16	0.16	1.29	1.02	0.36	83	83	70	2.89	1.70	74	0.044	99	99	3.0	0.59	0.78	15.49	105.6	161.9	157.9	56.0	161.6	103	70	70	70	0.008	1.001	6.503	688
3076	491.333	490.363		0.16	0.16	1.29	1.03	0.36	83	83	70	2.88	1.70	75	0.042	101	102	2.9	0.14	0.80	15.51	105.5	161.8	157.8	55.9	161.5	106	70	70	70	0.016	1.001	6.667	704
3077	491.493	490.522		0.16	0.16	1.29	1.02	0.36	83	83	70	2.89	1.70	74	0.044	99	99	3.2	-0.36	0.82	15.50	105.5	161.7	157.7	55.9	161.4	130	70	70	70	0.009	1.001	6.868	725
3078	491.653	490.681		0.16	0.16	1.29	1.02	0.36	83	83	70	2.89	1.70	74	0.041	103	102	3.2	0.07	0.78	15.48	105.3	161.5	157.5	56.0	161.2	119	70	70	70	0.008	1.001	6.506	686
3079	491.814	490.841		0.16	0.16	1.29	1.02	0.36	83	83	70	2.88	1.70	74	0.043	101	100	2.9	0.23	0.78	15.50	105.2	161.4	157.4	55.9	161.1	113	70	70	70	0.008	1.001	6.505	685
3080	491.974	491.000		0.16	0.16	1.28	1.02	0.36	83	83	70	2.88	1.70	73	0.042	101	101	3.2	-0.23	0.72	15.53	105.1	161.3	157.4	56.0	161.0	110	70	70	70	0.008	1.001	6.016	633
3081	492.133	491.159		0.16	0.16	1.29	1.02	0.36	83	83	70	2.88	1.70	73	0.044	98	99	3.2	0.00	0.77	15.57	105.0	161.2	157.2	55.9	160.9	108	70	70	70	0.008	1.001	6.393	672
3082	492.294	491.319		0.16	0.16	1.28	1.02	0.36	83	83	70	2.89	1.70	73	0.044	100	99	3.0	0.17	0.84	15.52	104.8	161.0	157.1	55.9	160.8	107	70	70	70	0.008	1.001	6.989	733
3083	492.453	491.477		0.16	0.16	1.28	1.03	0.36	83	83	70	2.89	1.70	73	0.046	96	96	3.0	0.00	0.80	15.47	104.7	161.0	157.0	56.0	160.7	107	70	70	70	0.008	1.001	6.661	698
3084	492.613	491.637		0.16	0.16	1.28	1.02	0.36	83	83	70	2.88	1.70	73	0.044	99	99	3.0	-0.06	0.82	15.47	104.5	160.9	156.9	56.1	160.6	106	70	70	70	0.008	1.001	6.824	714
3085	492.773	491.796		0.16	0.16	1.29	1.02	0.36	83	83	70	2.88	1.70	73	0.039	105	105	3.2	-0.19	0.80	15.45	104.5	160.7	156.8	55.9	160.4	105	70	70	70	0.008	1.001	6.662	697
3086	492.933	491.955		0.16	0.16	1.28	1.03	0.36	83	83	70	2.89	1.70	73	0.042	101	101	3.1	0.13	0.78	15.48	104.4	160.6	156.6	55.9	160.3	105	70	70	70	0.008	1.001	6.499	679
3087	493.092	492.116		0.16	0.16	1.28	1.02	0.36	83	83	70	2.89	1.70	73	0.043	99	101	3.0	0.11	0.82	15.49	104.2	160.4	156.5	56.0	160.1	104	70	70	70	0.008	1.001	6.827	712
3088	493.252	492.274		0.16	0.16	1.29	1.02	0.36	83	83	70	2.89	1.70	73	0.042	101	100	3.2	-0.19	0.82	15.59	104.1	160.3	156.4	55.9	160.1	105	70	70	70	0.008	1.001	6.831	712
3089	493.412	492.433		0.16	0.16	1.29	1.03	0.36	83	83	70	2.88	1.70	73	0.043	100	100	3.1	0.03	0.78	15.47	103.9	160.2	156.2	56.0	159.9	106	70	70	70	0.008	1.001	6.501	677
3090	493.572	492.593		0.16	0.16	1.29	1.02	0.36	83	83	70	2.90	1.70	74	0.045	98	98	3.8	-0.64	0.82	15.49	103.8	160.1	156.2	55.9	159.8	105	70	70	70	0.008	1.001	6.827	710

Elapsed Time	Particulate Sampling Data																Fuel Weight, lb		Flow, gpm		Temperature Data, oF												
	Gas Meter Cubic Feet (1)	Gas Meter Cubic Feet (2)	Gas Meter Cubic Feet (amb)	Sample Rate, cfm (1)	Sample Rate, cfm (2)	Orifice dH (1)	Orifice dH (2)	Orifice dH (amb)	Meter oF (1)	Meter oF (2)	Meter oF (amb)	Meter Vac. In. Hg. (1)	Meter Vac. In. Hg. (2)	Dilution Tunnel Temp.	Dilution Tunnel dP	Pro. Rate (%) (1)	Pro. Rate (%) (2)	Scale Reading	Weight Change	Load Side Liquid Flow Rate	Boiler Side Liquid Flow Rate (optional)	Thermopile ΔT	Boiler to Heat Exch. Temp.	Heat Exch to Boiler Temp.	Inlet Load Temp.	Outlet Load Temp.	Stack	Filter (1)	Filter (2)	Ambient		Specific Heat of Inlet Water (BTU/lb-°F)	Mass Flow Rate of Inlet Water (lb/min)	Heat Output, Btu
3091	493.732	492.752		0.16	0.16	1.29	1.02	0.36	83	83	70	2.88	1.70	73	0.042	101	101	2.9	0.90	0.78	15.46	103.7	159.9	156.1	55.9	159.7	104	70	70	70	0.008	1.001	6.503	675
3092	493.892	492.911		0.16	0.16	1.29	1.02	0.36	83	83	70	2.89	1.70	73	0.043	100	100	2.9	-0.04	0.76	15.47	103.6	159.9	155.9	56.0	159.6	103	70	70	70	0.008	1.001	6.339	658
3093	494.053	493.071		0.16	0.16	1.29	1.02	0.36	83	83	70	2.89	1.70	73	0.044	100	99	2.9	0.02	0.78	15.55	103.6	159.7	155.9	55.9	159.5	103	70	70	70	0.008	1.001	6.506	675
3094	494.213	493.230		0.16	0.16	1.29	1.02	0.36	83	83	70	2.90	1.70	78	0.043	101	100	2.7	0.24	0.82	15.62	103.4	159.6	155.7	55.9	159.4	104	70	70	70	0.007	1.001	6.826	707
3095	494.373	493.389		0.16	0.16	1.29	1.03	0.36	83	83	70	2.90	1.70	82	0.043	101	101	2.1	0.54	0.82	15.59	103.3	159.5	155.6	55.9	159.3	132	70	70	70	0.024	1.001	6.827	706
3096	494.533	493.549		0.16	0.16	1.29	1.02	0.36	83	83	70	2.90	1.70	84	0.041	104	104	2.2	-0.08	0.76	15.48	103.2	159.5	155.5	55.9	159.1	155	71	70	70	0.026	1.001	6.337	655
3097	494.693	493.707		0.16	0.16	1.28	1.03	0.36	83	83	70	2.90	1.70	87	0.044	100	99	1.5	0.72	0.80	15.54	103.3	159.5	155.6	55.9	159.2	166	71	70	70	0.032	1.001	6.665	689
3098	494.852	493.867		0.16	0.16	1.28	1.03	0.36	83	83	70	2.90	1.70	88	0.042	102	103	0.9	0.60	0.80	15.52	103.4	159.7	155.8	55.9	159.3	176	71	71	70	0.029	1.001	6.666	690
3099	495.012	494.026		0.16	0.16	1.29	1.02	0.36	83	83	70	2.90	1.70	91	0.041	104	104	0.3	0.59	0.68	15.59	103.6	159.9	156.0	55.9	159.5	187	71	71	70	0.030	1.001	5.692	590
3100	495.172	494.185	976.613	0.16	0.16	1.29	1.02	0.36	83	83	70	2.89	1.70	93	0.041	104	104	0.0	0.31	0.68	15.49	104.0	160.3	156.5	56.0	159.9	200	71	71	70	0.034	1.001	5.697	593
	495.172	494.185	976.613			1.30	1.04	0.36	83	83	71			78	0.043					0.81	12.12	116.8	173.2	168.7	56.0	172.8		71.62	71.33		0.02			792
																																	TOTAL:	2455660

Hydronic Heating Appliances - Test Method ASTM 2618
Fuel Moisture

Manufacturer:	Central Boiler - WoodMaster
Model:	Edge 960 - CleanFire 900
Tracking No.:	2430
Project No.:	0117WB041E
Technician:	BD, TT
Run #:	3
Test Date:	December 14, 2020

Wet Weight (lb)	% Moisture				
9.5	19.2	19.4	20	20.4	19.2
8.9	18.9	18.9	22.9	25.4	19.4
9.2	22.3	20.6	27.5	21	19
9.4	25	22.7	18	18.9	21.2
10.8	20	20.5	20.2	20	21.2
9.4	20.5	22.5	18.6	19.5	18
11.7	21.6	19.1	18.6	18.6	18
11.6	18.9	19.4	18.3	23	19.7
10.8	19.6	18.6	19.1	19	20.2
12	19.4	18	19.5	22.3	21
9.5	19.6	20.2	19.2	20.8	22.1
9.7	23.7	26.4	22.9	26	20.6
10.7	18.4	18.9	21.8	21.4	19.2
10.1	20	20.5	18.2	19	20.4
11.2	20.5	20	20.5	18.6	18.6
10.5	22.0	18.2	18.0	18.9	18.2
8.9	25.3	25.3	26.2	24.6	19.3
9.7	18.0	22.3	18.1	19.7	19.0
11.3	19.4	25.6	22.5	18.7	22.6
10.3	19.6	19.3	18.4	19.5	20.9
10.2	25.3	18.2	18.7	18.7	20.0
10.4	22.5	18.1	24.2	19.0	18.6
10.3	25.6	23.2	19.3	21.4	22.9
9.8	18.0	18.7	20.9	19.1	21.4
10.6	23.7	26.4	22.9	26.0	20.6
9.7	18.6	22.8	19.4	18.0	18.3
11.4	25.3	25.3	26.2	24.6	19.3
10.8	20.4	18.4	20.2	19.1	18.5
10.4	18.7	18.9	19.4	22.1	18.6
10.9	24.6	23.7	24.2	19.4	20.7
9.0	18.6	19.1	22.1	18.2	22.4
10.0	22.4	22.9	22.4	18.9	19.2
9.8	18.6	18.7	19.2	20.7	21.4
9.8	18.3	24.2	21.8	22.8	25.2
10.8	22.9	23.2	22.1	21.5	22.5
10.4	18.0	18.0	19.9	21.9	22.3
9.3	23.5	24.2	22.1	19.1	20.9
10.7	18.6	20.1	19.1	18.2	20.6

Total Weight of Load (lb):	389.5
Total Moisture of Load (%):	20.7

Equipment Numbers:

Hydronic Heating Appliances - Test Method ASTM 2618
Results

Manufacturer: Central Boiler - WoodMaster
Model: Edge 960 - CleanFire 900
Tracking No.: 2430
Project No.: 0117WB041E
Run #: 3
Date: 12/14/20

Equipment Numbers:

TRAIN 1 (First Hour emissions)

Sample Component	Reagent	Filter, Probe or Dish #	Weights		
			Final, mg	Tare, mg	Particulate, mg
B. Front filter catch	Filter	E144	123.4	119.4	4.0
C. Rear filter catch	Filter	E152	118.3	119.0	-0.7
D. Probe catch*	Probe	20	114254.8	114254.2	0.6
E. Filter seals catch*	Seals	S051	4094.6	4092.8	1.8

Sub-Total | Total Particulate, mg: | 5.7

TRAIN 1 (Post First Hour Change-out)

Sample Component	Reagent	Filter, Probe or Dish #	Weights		
			Final, mg	Tare, mg	Particulate, mg
B. Front filter catch	Filter	E146	127.4	119.4	8.0
C. Rear filter catch	Filter	E147	118.9	118.2	0.7
D. Probe catch*	Probe	34	115869.3	115867.6	1.7
E. Filter seals catch*	Seals	S058	3471.0	3469.5	1.5

Sub-Total | Total Particulate, mg: | 11.9

Train 1 Aggregate | Total Particulate, mg: | **17.6**

TRAIN 2

Sample Component	Reagent	Filter, Probe or Dish #	Weights		
			Final, mg	Tare, mg	Particulate, mg
A. Front filter catch	Filter	E148	130.3	120.0	10.3
B. Rear filter catch	Filter	E149	119.6	119.9	-0.3
C. Probe catch*	Probe	59	117788.7	117786.4	2.3
D. Filter seals catch*	Seals	S060	4104.3	4100.9	3.4

Total Particulate, mg: | 15.7

AMBIENT

Sample Component	Reagent	Filter # or Probe #	Weights		
			Final, mg	Tare, mg	Particulate, mg
A. Front filter catch*	Filter	E150	120.2	120.0	0.2

Total Particulate, mg: | 0.2

*Particulate catch that results in a negative number, is assumed to be zero for probes and seals, negative numbers for filters are assumed to be part of the seal weight.

Component	Equations:
A. Front filter catch	Final (mg) - Tare (mg) = Particulate, mg
B. Rear filter catch	Final (mg) - Tare (mg) = Particulate, mg
C. Probe catch	Final (mg) - Tare (mg) = Particulate, mg

OMNI-Test Laboratories, Inc. **ASTM E2780 Wood Heater Run Sheets**

Client: Central Boiler Woodmaster Project Number: 0117WB041E Run Number: 3

Model: Edge 960 Clean Fire 900 Tracking Number: 2430 Date: 12/14/2020

Test Crew: Bruce Davis, Tony Tong

OMNI Equipment ID numbers:

Wood Heater Supplemental Data

Start Time: 2413 12/14 Booth #: 3

Stop Time: 2453 12/17

Stack Gas Leak Check:

Initial: good Final: good

Sample Train Leak Check:

A: 0.000 @ 12 "Hg

B: 2.000 @ 9 "Hg

Calibrations: Span Gas CO_2: 16.94 CO: 4.32

	Pre Test		Post Test	
	Zero	Span	Zero	Span
Time	2036	2036	0110	0113
CO_2	0.00	16.94	0.010	16.60
CO	0.00	4.32	0.02	4.244

Air Velocity (ft/min): Initial: <50 Final: <50

Scale Audit (lbs): Initial: 10 Final: 10

Pitot Tube Leak Test: Initial: good Final: good

Stack Diameter (in): 8"

Induced Draft: 0.0

% Smoke Capture: 100%

Flue Pipe Cleaned Prior to First Test in Series:

Date: 12/8/20 Initials: BZ

	Initial	Middle	Ending
P_b (in/Hg)	30.30	30.22	29.88
RH (%)			
Ambient (°F)	67	70	70

Tunnel Traverse

Microtector Reading	dP (in H_2O)	T(°F)
1	.056	71
2	.056	71
3	.060	71
4	.060	71
5	.050	71
6	.044	71
1	.040	71
2	.054	71
3	.060	71
4	.060	71
5	.054	71
6	.048	71
Center:		
	.048	71

Background Filter Volume: 976.613

Tunnel Static Pressure (in H_20):	
Beginning of Test	End of Test
-.496	-.496

Technician Signature: Date: 12/14/20

ASTM E2780 Wood Heater Run Sheets

Client: Central Boiler WoodMaster Project Number: 0117WB041E Run Number: 3
Model: Edge 960 Tracking Number: 2430 Date: 12/14/2020
Test Crew: Bruce Davis, Tony Tong
OMNI Equipment ID numbers:

Wood Heater Run Notes

Air Control Settings

Primary:

Automatic
Demand Temp 165° - 185° F

Secondary: fixed

Tertiary/Pilot: N/A

Fan: Automatic

Preburn Notes

Time	Notes
Ø	At CAT I Heat draw entire test

Test Notes

Sketch test fuel configuration:

See photo

Start up procedures & Timeline:

Bypass: N/A
Fuel loaded by: 4.5 min
Door closed at: 50 min
Primary air: Automatic

Notes:

Time	Notes
60	Changed front filter to train A.

Technician Signature: Date: 12/14/20

OMNI-Test Laboratories, Inc.

Manufacturer: Central Boiler, WoodMaste
Model: Edge 960, CleanFire 900
Date: 12/14/20
Run: 3
Control #: 0117WB041E
Test Duration: 3100
Output Category: I

Technicians: B. Davis

Test Results in Accordance with CSA B415.1-09

	HHV Basis	LHV Basis
Overall Efficiency	79.1%	84.6%
Combustion Efficiency	94.8%	94.8%
Heat Transfer Efficiency	83%	89.2%

Output Rate (kJ/h)	43,953	41,695	**(Btu/h)**
Burn Rate (kg/h)	2.78	6.13	**(lb/h)**
Input (kJ/h)	55,590	52,733	**(Btu/h)**

Test Load Weight (dry kg)	143.80	316.94	**dry lb**
MC wet (%)	18.63		
MC dry (%)	22.90		
Particulate (g)	51.19		
CO (g)	11,234		
Test Duration (h)	51.67		

Emissions	**Particulate**	**CO**
g/MJ Output	N/A	4.95
g/kg Dry Fuel	N/A	78.12
g/h	N/A	217.44
lb/MM Btu Output	N/A	11.50

Air/Fuel Ratio (A/F)	12.04

VERSION: **2.3** **3/23/2010**

VERSION: 2.3 3/23/2010

Manufacturer: Central Boiler, WoodMaster
Model: Edge 960, CleanFire 900
Date: 12/14/2020
Run: 3
Control #: 0117WB041E
Test Duration: 3100
Output Category: I

Appliance Type: Non-Cat

Temp. Units F (F or C)
Weight Units lb (kg or lb)

Wood Moisture (% wet): 18.63
Load Weight (lb wet): 389.50
Burn Rate (dry kg/h): 2.78
Total Particulate Emissions: 51.19 g

Fuel Data

	Maple	
HHV	19,973	kJ/kg
%C	50.64	
%H	6.02	
%O	41.74	
%Ash	1.35	

Averages	**1.16**	**7.57**	**#DIV/0!**	**145.00**	**70.63**	
					Temp. (ºF)	
Elapsed Time (min)	**Fuel Weight Remaining (lb)**	**Flue Gas Composition (%) CO**	**CO_2**	**O_2**	**Flue Gas**	**Room Temp**
0	389.50	1.84	11.35		129.0	67.0
1	387.84	1.77	11.11		140.0	67.0
2	386.60	1.69	10.78		143.0	67.0
3	385.25	1.62	10.44		146.0	67.0
4	383.46	1.47	9.86		156.0	67.0
5	381.90	1.14	8.48		176.0	67.0
6	379.56	0.87	6.86		186.0	67.0
7	378.59	0.74	5.71		192.0	67.0
8	376.23	1.01	5.33		197.0	67.0
9	373.93	3.03	6.98		200.0	67.0
10	372.32	5.20	9.12		203.0	67.0
11	370.31	5.20	10.53		205.0	67.0
12	368.64	5.20	11.30		208.0	67.0
13	366.31	5.20	11.79		210.0	67.0
14	363.98	5.20	12.14		213.0	67.0
15	362.82	5.20	12.47		227.0	67.0
16	360.98	5.20	12.78		247.0	67.0
17	359.51	5.20	13.02		263.0	67.0
18	358.74	5.20	13.18		274.0	67.0
19	356.52	5.20	13.36		281.0	67.0
20	355.84	5.20	14.32		283.0	67.0
21	354.20	5.20	16.44		285.0	67.0

22	352.19	2.81	17.98		287.0	67.0
23	351.27	1.27	18.72		287.0	67.0
24	349.39	0.56	18.79		290.0	67.0
25	347.30	0.31	18.59		291.0	67.0
26	346.38	0.22	18.48		292.0	67.0
27	345.40	0.18	18.34		293.0	67.0
28	344.20	0.16	18.32		293.0	67.0
29	343.71	0.15	18.36		295.0	67.0
30	343.23	0.13	18.25		268.0	67.0
31	343.24	0.13	18.07		244.0	67.0
32	343.26	0.12	17.88		232.0	67.0
33	343.04	0.12	17.71		223.0	67.0
34	343.29	0.10	17.08		218.0	67.0
35	343.40	0.07	15.43		214.0	67.0
36	343.61	0.04	13.43		210.0	67.0
37	342.89	0.04	11.49		207.0	67.0
38	342.43	0.05	9.55		204.0	67.0
39	342.62	0.05	8.06		201.0	67.0
40	343.18	0.06	7.16		200.0	67.0
41	343.29	0.07	6.40		199.0	67.0
42	342.86	0.08	5.71		197.0	67.0
43	343.23	0.09	5.14		195.0	67.0
44	343.30	0.09	4.54		192.0	67.0
45	343.74	0.09	4.00		189.0	67.0
46	342.72	0.08	3.51		187.0	66.0
47	343.80	0.09	3.10		184.0	66.0
48	343.50	0.12	2.86		181.0	66.0
49	343.87	0.16	2.81		179	66
50	344.37	0.21	2.86		177	66
51	343.17	0.26	2.94		174	66
52	343.41	0.3	3.05		172	66
53	342.82	0.32	3.14		170	66
54	343.57	0.34	3.2		168	66
55	343.58	0.35	3.22		166	66
56	343.94	0.35	3.22		164	67
57	343.69	0.34	3.18		162	67
58	343.61	0.34	3.14		160	66
59	344.20	0.34	3.12		158	66
60	343.94	0.33	3.1		157	67
61	343.33	0.33	3.06		155	67
62	343.80	0.32	3		154	67
63	344.22	0.3	2.91		152	67

64	343.51	0.3	2.83		150	67
65	344.04	0.29	2.81		149	67
66	343.24	0.29	2.79		148	67
67	344.59	0.29	2.78		146	67
68	343.24	0.29	2.76		145	67
69	344.23	0.29	2.73		143	67
70	343.44	0.28	2.7		142	67
71	343.69	0.28	2.66		141	67
72	343.50	0.27	2.63		140	67
73	344.16	0.27	2.62		139	67
74	343.81	0.27	2.59		137	67
75	343.63	0.27	2.55		136	67
76	344.13	0.26	2.52		135	67
77	343.70	0.26	2.48		134	67
78	343.38	0.25	2.44		134	67
79	344.01	0.25	2.4		134	67
80	344.09	0.24	2.37		132	67
81	344.42	0.24	2.33		131	67
82	344.04	0.24	2.3		130	67
83	343.59	0.24	2.28		129	67
84	344.58	0.24	2.26		129	67
85	343.56	0.24	2.24		129	67
86	343.91	0.23	2.22		127	67
87	343.39	0.23	2.18		126	67
88	343.67	0.22	2.13		126	67
89	344.58	0.22	2.08		126	67
90	343.98	0.22	2.06		125	67
91	343.75	0.22	2.04		125	67
92	344.65	0.21	2		125	67
93	343.51	0.21	1.97		123	67
94	343.86	0.21	1.94		123	67
95	343.70	0.21	1.93		121	67
96	344.37	0.21	1.93		121	67
97	344.15	0.21	1.91		120	67
98	344.40	0.2	1.87		119	67
99	343.66	0.2	1.85		119	67
100	343.84	0.2	1.84		153	67
101	343.44	0.2	1.83		159	67
102	343.63	0.2	1.82		147	67
103	343.68	0.2	1.8		140	67
104	344.01	0.24	1.86		134	67
105	343.30	0.46	2.57		131	67

106	343.81	1.04	4.98		128	67
107	343.93	1.41	6.98		127	67
108	344.02	1.46	7.61		126	67
109	343.54	1.41	7.69		125	67
110	343.39	1.32	7.58		124	67
111	343.58	1.23	7.37		123	67
112	343.58	1.15	7.13		122	67
113	343.78	1.09	6.91		121	67
114	343.94	1.02	6.66		121	67
115	343.73	0.96	6.41		120	67
116	343.68	0.92	6.18		119	67
117	343.73	0.88	5.97		119	67
118	344.02	0.83	5.75		118	67
119	343.38	0.78	5.52		118	67
120	344.00	0.75	5.31		117	67
121	343.11	0.72	5.15		117	67
122	343.31	0.7	5.01		116	67
123	343.72	0.67	4.85		114	67
124	343.75	0.64	4.69		115	67
125	343.83	0.62	4.54		116	67
126	343.44	0.59	4.37		115	67
127	343.71	0.56	4.19		114	67
128	343.50	0.53	4.04		114	67
129	343.27	0.52	3.91		114	67
130	343.31	0.51	3.83		113	67
131	343.57	0.49	3.75		148	67
132	343.04	0.48	3.66		149	67
133	343.36	0.46	3.56		139	67
134	343.36	0.45	3.47		133	67
135	343.52	0.47	3.49		129	67
136	343.44	0.61	4.12		126	67
137	343.30	0.99	5.94		123	67
138	343.20	1.2	7.15		123	67
139	342.95	1.21	7.45		120	67
140	343.48	1.17	7.42		120	67
141	343.03	1.1	7.24		118	67
142	343.51	1.02	6.99		118	67
143	343.36	0.97	6.76		118	67
144	343.44	0.91	6.51		116	67
145	343.05	0.85	6.27		115	67
146	343.39	0.81	6.08		115	67
147	343.30	0.77	5.86		115	67

148	343.08	0.73	5.64		114	67
149	343.03	0.69	5.43		113	67
150	342.98	0.65	5.2		113	67
151	343.34	0.62	4.96		112	67
152	343.64	0.59	4.79		112	67
153	343.56	0.56	4.62		112	67
154	342.87	0.54	4.48		111	67
155	342.88	0.53	4.36		112	67
156	343.49	0.51	4.26		111	67
157	343.15	0.5	4.17		111	67
158	343.69	0.49	4.08		111	67
159	343.50	0.47	3.98		110	67
160	342.34	0.46	3.89		109	67
161	342.63	0.45	3.84		109	67
162	342.82	0.44	3.77		144	67
163	342.49	0.43	3.68		143	67
164	343.09	0.42	3.59		136	67
165	343.31	0.41	3.51		131	67
166	343.07	0.43	3.58		127	67
167	343.39	0.63	4.5		124	67
168	342.87	1.02	6.38		123	67
169	342.96	1.19	7.26		119	67
170	342.43	1.2	7.38		118	67
171	342.89	1.16	7.27		117	67
172	343.33	1.1	7.05		117	67
173	342.75	1.03	6.78		116	67
174	342.81	0.97	6.5		115	67
175	342.76	0.9	6.19		113	67
176	342.78	0.83	5.84		114	67
177	342.97	0.77	5.52		112	67
178	343.62	0.73	5.28		112	67
179	342.93	0.69	5.06		113	67
180	342.85	0.66	4.86		112	67
181	343.33	0.63	4.68		111	67
182	343.15	0.59	4.49		110	67
183	342.56	0.56	4.3		110	67
184	343.07	0.54	4.15		110	67
185	343.19	0.51	4.01		110	67
186	342.84	0.5	3.89		110	67
187	343.20	0.49	3.82		108	67
188	343.19	0.48	3.75		108	67
189	343.14	0.47	3.71		108	67

190	343.06	0.46	3.64		108	67
191	343.05	0.45	3.56		108	67
192	342.71	0.44	3.5		108	67
193	342.75	0.42	3.43		142	67
194	342.50	0.42	3.4		138	67
195	342.83	0.41	3.36		133	67
196	342.67	0.4	3.31		130	67
197	342.82	0.43	3.46		127	67
198	342.53	0.72	4.9		125	67
199	342.83	1.22	7.64		122	67
200	342.85	1.41	8.9		121	67
201	342.33	1.4	9.04		119	67
202	342.65	1.33	8.84		118	67
203	342.42	1.25	8.5		117	67
204	342.70	1.17	8.15		116	67
205	342.32	1.1	7.79		115	67
206	342.54	1.02	7.39		114	67
207	342.14	0.94	7		113	67
208	342.51	0.89	6.64		112	67
209	342.65	0.83	6.32		112	67
210	342.46	0.79	6.03		111	67
211	342.49	0.74	5.72		111	67
212	342.77	0.7	5.44		110	67
213	342.75	0.65	5.16		110	67
214	342.27	0.62	4.92		110	67
215	342.88	0.59	4.7		108	67
216	342.63	0.56	4.5		107	67
217	342.22	0.53	4.31		106	67
218	342.95	0.5	4.13		106	67
219	342.97	0.48	3.95		106	67
220	343.38	0.46	3.8		106	67
221	342.90	0.45	3.66		106	67
222	341.88	0.43	3.51		106	67
223	342.32	0.41	3.4		106	67
224	341.96	0.4	3.31		139	67
225	342.54	0.39	3.21		134	67
226	342.57	0.38	3.14		129	67
227	342.29	0.38	3.1		126	67
228	341.83	0.43	3.33		124	67
229	342.19	0.71	4.98		122	67
230	341.88	1.13	7.7		119	67
231	342.15	1.23	8.68		118	67

232	340.55	1.2	8.7		117	67
233	339.75	1.14	8.44		141	67
234	338.65	1.06	8.08		162	67
235	337.35	0.99	7.67		198	67
236	334.87	0.92	7.3		224	67
237	334.29	0.88	7		242	67
238	332.52	1.11	7.53		254	67
239	330.48	1.8	9.99		264	67
240	329.04	1.39	13.64		271	67
241	327.63	0.55	15.92		276	67
242	325.58	0.21	16.73		283	67
243	323.80	0.13	17.25		285	67
244	322.39	0.12	17.75		286	67
245	320.85	0.12	18.18		289	67
246	319.10	0.13	18.59		291	67
247	318.45	0.14	18.9		291	67
248	316.27	0.13	18.82		293	67
249	314.69	0.12	18.67		295	67
250	313.60	0.12	18.63		294	67
251	311.40	0.11	18.54		295	67
252	310.30	0.11	18.49		296	67
253	309.20	0.11	18.51		298	67
254	307.07	0.11	18.47		298	67
255	305.82	0.11	18.34		299	67
256	305.07	0.1	18.17		299	67
257	304.83	0.1	18.07		268	67
258	304.57	0.1	18.05		247	67
259	304.55	0.09	18		235	67
260	303.92	0.09	17.89		226	67
261	303.52	0.08	17.32		221	67
262	303.56	0.05	16.19		216	67
263	303.56	0.03	14.98		212	67
264	303.55	0.02	13.65		209	67
265	304.21	0.04	12.24		206	67
266	303.14	0.04	11.85		203	67
267	303.48	0.04	12.43		203	67
268	303.30	0.03	12.08		202	67
269	304.05	0.05	11.24		200	67
270	302.76	0.08	10.23		197	67
271	303.29	0.13	9.18		195	67
272	303.70	0.21	8.28		192	67
273	303.11	0.48	7.97		189	67

274	303.01	0.92	8.34		187	67
275	303.45	1.39	9.02		184	67
276	303.48	1.8	9.75		181	67
277	303.42	2.08	10.33		179	67
278	303.71	2.26	10.72		177	67
279	303.80	2.32	10.87		175	67
280	303.78	2.28	10.74		173	67
281	304.19	2.15	10.31		170	67
282	303.46	2.11	10.07		168	67
283	303.80	2.07	9.97		166	67
284	303.56	2.01	9.79		164	67
285	303.63	1.93	9.56		163	67
286	303.88	1.83	9.22		161	67
287	303.81	1.74	8.88		159	67
288	303.69	1.64	8.5		157	67
289	303.85	1.55	8.15		156	67
290	303.76	1.47	7.83		155	67
291	303.00	1.36	7.4		153	67
292	304.39	1.25	6.95		152	67
293	303.52	1.17	6.55		150	67
294	304.06	1.16	6.41		148	67
295	304.39	1.13	6.27		147	67
296	304.15	1.09	6.09		146	67
297	303.45	1.05	5.91		145	67
298	303.69	0.99	5.67		145	67
299	303.75	0.95	5.47		143	67
300	303.93	0.91	5.28		141	67
301	303.45	0.88	5.11		140	67
302	304.02	0.86	5		139	67
303	304.97	0.83	4.89		138	67
304	303.98	0.79	4.69		137	67
305	304.28	0.75	4.54		136	67
306	303.99	0.72	4.37		135	67
307	304.79	0.68	4.18		134	67
308	303.82	0.66	4.04		133	67
309	303.83	0.64	3.95		133	67
310	304.39	0.63	3.86		133	67
311	303.80	0.61	3.77		132	67
312	304.19	0.59	3.67		131	67
313	303.91	0.57	3.57		130	67
314	303.64	0.55	3.47		129	67
315	304.53	0.52	3.36		129	67

316	303.92	0.5	3.24		127	67
317	303.75	0.49	3.17		126	67
318	303.83	0.48	3.09		126	67
319	304.29	0.47	3.01		126	67
320	303.93	0.45	2.95		125	67
321	303.74	0.44	2.88		124	67
322	303.83	0.43	2.83		123	67
323	303.96	0.42	2.77		122	67
324	304.56	0.41	2.72		122	67
325	303.72	0.41	2.7		122	67
326	304.13	0.4	2.64		121	67
327	303.62	0.39	2.6		162	67
328	303.29	0.38	2.57		161	67
329	303.94	0.37	2.53		152	67
330	302.89	0.39	2.53		146	67
331	303.17	0.63	3.36		143	67
332	303.70	1.48	6.64		139	67
333	303.25	2.07	8.86		136	67
334	303.26	2.19	9.67		136	67
335	303.74	2	9.63		133	67
336	303.76	1.79	9.18		131	67
337	303.13	1.59	8.63		130	67
338	303.68	1.42	8.05		129	67
339	303.27	1.28	7.53		128	67
340	303.18	1.19	7.12		126	67
341	303.42	1.12	6.81		125	67
342	303.67	1.05	6.48		126	67
343	303.89	0.99	6.17		124	67
344	303.32	0.95	5.91		123	67
345	303.49	0.91	5.73		123	67
346	303.01	0.86	5.47		122	67
347	303.47	0.81	5.2		122	67
348	303.26	0.76	4.95		121	67
349	303.18	0.73	4.76		121	67
350	303.52	0.7	4.6		121	67
351	303.11	0.67	4.42		120	67
352	303.77	0.65	4.29		118	67
353	303.69	0.63	4.17		118	67
354	303.67	0.61	4.06		118	67
355	303.58	0.57	3.89		118	67
356	302.91	0.53	3.66		117	67
357	303.24	0.51	3.51		117	67

358	302.92	0.49	3.42		157	67
359	303.38	0.48	3.33		152	67
360	303.11	0.46	3.25		144	67
361	302.70	0.46	3.22		140	67
362	303.25	0.61	3.84		135	67
363	302.76	1.17	5.85		133	67
364	303.33	1.48	7.17		131	66
365	303.35	1.48	7.65		129	67
366	302.73	1.38	7.67		128	67
367	303.23	1.24	7.47		127	67
368	303.07	1.13	7.17		127	67
369	302.80	1.02	6.81		124	67
370	303.15	0.93	6.39		125	67
371	302.80	0.86	6.04		124	67
372	303.21	0.79	5.71		123	67
373	302.43	0.74	5.41		123	67
374	302.39	0.71	5.23		121	67
375	302.80	0.68	5.05		121	67
376	303.14	0.64	4.84		119	67
377	303.11	0.6	4.62		120	67
378	303.50	0.58	4.44		120	67
379	302.98	0.55	4.29		119	67
380	303.30	0.53	4.15		119	67
381	302.80	0.51	4.02		117	67
382	303.18	0.49	3.94		118	67
383	303.49	0.47	3.83		116	67
384	303.04	0.46	3.71		117	67
385	302.68	0.44	3.62		117	67
386	303.56	0.43	3.55		114	67
387	302.55	0.41	3.43		116	67
388	302.34	0.39	3.29		113	67
389	302.61	0.38	3.19		148	67
390	302.62	0.36	3.12		143	67
391	302.07	0.36	3.07		138	67
392	302.66	0.36	3.05		134	67
393	302.43	0.49	3.77		132	67
394	302.29	0.86	5.28		130	67
395	302.71	1	5.93		127	67
396	302.56	0.98	6.08		127	67
397	302.80	0.91	6.02		125	67
398	302.42	0.84	5.87		123	67
399	302.28	0.76	5.63		122	67

400	302.59	0.7	5.39		122	67
401	303.24	0.64	5.15		123	67
402	302.55	0.6	4.94		123	67
403	302.67	0.56	4.76		121	67
404	303.22	0.53	4.56		121	67
405	302.92	0.49	4.35		119	67
406	302.39	0.47	4.2		119	67
407	302.86	0.46	4.11		119	67
408	302.97	0.44	3.99		118	67
409	303.00	0.42	3.84		117	67
410	302.66	0.4	3.73		118	67
411	303.01	0.38	3.63		116	68
412	302.68	0.37	3.52		118	68
413	303.03	0.36	3.45		117	69
414	302.68	0.35	3.39		117	69
415	302.69	0.34	3.33		116	69
416	303.02	0.32	3.22		117	70
417	302.96	0.32	3.16		114	70
418	302.55	0.31	3.13		115	71
419	302.29	0.3	3.09		116	71
420	302.31	0.3	3.05		143	71
421	302.77	0.29	3.03		139	72
422	302.73	0.29	3		136	72
423	302.40	0.29	3.01		133	72
424	302.13	0.48	3.91		131	72
425	302.98	0.94	5.63		129	73
426	302.57	1.1	6.31		127	73
427	303.03	1.07	6.31		127	74
428	302.58	1	6.1		127	74
429	302.30	0.92	5.84		125	74
430	303.01	0.83	5.52		125	74
431	303.56	0.74	5.18		124	74
432	302.31	0.67	4.87		124	75
433	302.36	0.63	4.67		123	75
434	302.47	0.6	4.52		121	75
435	303.12	0.56	4.37		122	75
436	303.01	0.53	4.23		120	76
437	302.47	0.5	4.1		120	76
438	302.53	0.48	3.98		119	76
439	301.79	0.45	3.84		120	76
440	302.38	0.44	3.73		119	76
441	302.98	0.42	3.65		120	76

442	302.82	0.4	3.55		118	77
443	302.61	0.39	3.49		119	77
444	302.15	0.39	3.48		120	77
445	301.65	0.38	3.46		120	77
446	302.56	0.37	3.41		120	78
447	302.69	0.36	3.38		118	77
448	302.27	0.35	3.36		119	77
449	301.86	0.34	3.31		118	78
450	302.53	0.34	3.31		119	78
451	302.46	0.34	3.31		137	78
452	302.12	0.33	3.27		135	78
453	302.20	0.32	3.22		133	78
454	301.90	0.33	3.31		130	78
455	302.11	0.46	4.11		129	78
456	301.86	0.66	4.99		127	78
457	302.34	0.73	5.31		126	79
458	302.09	0.71	5.29		126	79
459	302.08	0.66	5.12		125	79
460	301.40	0.61	4.92		123	79
461	302.15	0.57	4.76		122	79
462	301.57	0.53	4.58		122	79
463	300.94	0.49	4.42		123	79
464	301.57	0.46	4.26		123	79
465	301.82	0.43	4.08		121	80
466	302.02	0.41	3.95		121	80
467	301.83	0.4	3.86		121	80
468	301.56	0.39	3.79		119	80
469	301.29	0.37	3.73		119	80
470	302.08	0.36	3.65		120	80
471	301.59	0.35	3.59		118	80
472	301.44	0.34	3.55		119	80
473	301.86	0.34	3.52		118	80
474	301.23	0.33	3.52		119	80
475	301.56	0.33	3.49		118	80
476	301.53	0.31	3.43		118	80
477	301.11	0.31	3.37		119	80
478	301.81	0.3	3.35		118	80
479	300.99	0.3	3.33		117	79
480	300.93	0.29	3.28		117	79
481	300.82	0.29	3.27		125	79
482	299.98	0.29	3.29		134	79
483	300.75	0.28	3.27		132	78

484	300.49	0.28	3.24		131	78
485	300.62	0.3	3.38		129	77
486	300.50	0.37	3.97		128	77
487	300.73	0.44	4.3		126	76
488	300.50	0.45	4.26		126	76
489	300.86	0.44	4.14		124	75
490	300.41	0.41	3.95		122	76
491	300.26	0.38	3.72		122	75
492	299.93	0.35	3.51		142	74
493	299.27	0.32	3.31		150	75
494	297.69	0.3	3.14		172	74
495	296.19	0.28	2.99		189	74
496	294.79	0.33	3.16		208	74
497	293.85	0.67	4.31		229	73
498	292.14	1.17	5.71		243	73
499	291.03	1.54	7.67		252	73
500	289.53	1.3	10.74		260	72
501	287.59	0.63	13.77		267	73
502	286.43	0.22	15.25		273	72
503	284.63	0.1	15.74		278	72
504	283.14	0.07	16.18		283	71
505	281.68	0.08	16.7		287	71
506	279.68	0.09	17.25		291	71
507	278.62	0.1	17.64		293	71
508	276.49	0.1	17.89		294	71
509	275.56	0.12	18.19		294	71
510	273.52	0.14	18.52		298	71
511	272.31	0.13	18.66		298	71
512	271.11	0.11	18.56		300	71
513	269.29	0.1	18.31		301	71
514	267.55	0.1	18.25		303	71
515	266.13	0.1	18.22		301	71
516	265.88	0.1	18.19		292	71
517	264.93	0.1	18.2		260	71
518	264.85	0.1	18.25		243	71
519	264.61	0.11	18.37		232	71
520	263.02	0.1	18.15		224	71
521	264.00	0.07	17.62		220	71
522	263.70	0.04	17.2		215	71
523	263.44	0.03	16.52		211	71
524	263.05	0.04	15.09		208	71
525	262.68	0.22	15.15		205	71

526	263.09	0.37	17.13		202	71
527	263.01	0.26	17.13		203	71
528	263.27	0.19	16.33		201	71
529	263.50	0.15	15.41		199	71
530	263.11	0.11	14.22		197	71
531	262.59	0.29	13.37		195	71
532	262.78	1.1	13.83		193	71
533	262.68	2.44	15.67		190	71
534	262.48	3.65	17.56		188	70
535	263.01	4.45	18.75		185	70
536	262.52	4.93	19.27		183	70
537	262.77	5.2	19.62		180	71
538	262.96	5.2	19.81		179	70
539	263.32	5.2	19.48		177	70
540	262.10	5.2	19.01		174	70
541	263.32	5.2	18.55		172	70
542	263.74	5.2	18.4		170	70
543	262.99	5.14	18.15		169	70
544	263.32	5.14	18.15		168	70
545	263.11	5.03	17.8		168	70
546	263.26	4.93	17.49		167	70
547	263.03	4.76	17.07		163	70
548	263.24	4.56	16.55		163	70
549	263.10	4.43	16.16		162	70
550	263.58	4.38	15.99		159	70
551	263.18	4.3	15.83		159	70
552	262.80	4.16	15.52		159	70
553	263.68	3.96	15.07		156	70
554	263.33	3.79	14.6		155	70
555	263.35	3.71	14.36		154	70
556	263.36	3.64	14.22		152	70
557	263.05	3.46	13.82		151	70
558	263.61	3.28	13.32		151	70
559	262.96	3.13	12.9		150	70
560	262.99	3.09	12.75		149	70
561	263.28	2.99	12.55		148	70
562	263.13	2.85	12.18		148	70
563	263.55	2.71	11.77		146	70
564	262.55	2.62	11.5		145	70
565	263.12	2.56	11.34		145	70
566	263.13	2.44	11.04		140	70
567	263.13	2.38	10.85		143	70

568	263.54	2.33	10.74		142	69
569	263.17	2.28	10.61		141	70
570	263.06	2.23	10.49		140	70
571	263.25	2.15	10.32		140	70
572	263.42	2.05	10.03		135	70
573	263.43	2.01	9.9		138	70
574	262.78	1.96	9.79		136	70
575	263.42	1.9	9.61		138	69
576	263.54	1.82	9.39		133	69
577	263.01	1.72	9.03		136	69
578	263.79	1.67	8.82		132	69
579	263.46	1.66	8.79		135	69
580	263.72	1.64	8.76		133	69
581	263.08	1.61	8.71		133	69
582	263.33	1.56	8.59		132	69
583	263.41	1.51	8.41		131	69
584	263.51	1.5	8.39		129	69
585	263.00	1.47	8.36		128	69
586	262.41	1.43	8.21		129	69
587	262.65	1.4	8.12		130	69
588	262.41	1.38	8.08		159	69
589	263.02	1.35	7.95		154	69
590	263.13	1.31	7.81		151	69
591	262.52	1.33	7.83		148	69
592	262.80	1.6	8.84		145	69
593	262.57	1.8	9.93		143	69
594	262.27	1.89	10.51		140	69
595	262.80	1.89	10.77		137	69
596	262.51	1.77	10.51		136	69
597	262.43	1.55	9.74		135	69
598	262.88	1.37	8.95		133	69
599	262.41	1.24	8.29		135	69
600	262.70	1.15	7.76		133	69
601	263.15	1.07	7.35		133	69
602	263.32	1.02	7.06		130	69
603	262.70	0.97	6.78		131	69
604	262.66	0.94	6.56		128	69
605	263.05	0.91	6.38		126	69
606	262.22	0.86	6.13		128	69
607	262.61	0.82	5.9		127	69
608	262.85	0.78	5.67		127	69
609	262.31	0.74	5.46		125	69

610	263.36	0.72	5.31		125	69
611	262.73	0.7	5.2		125	69
612	262.71	0.68	5.07		125	69
613	263.05	0.66	4.97		123	69
614	263.17	0.64	4.86		121	69
615	262.81	0.61	4.75		123	69
616	262.97	0.59	4.65		121	69
617	262.73	0.57	4.54		120	69
618	262.41	0.56	4.49		126	69
619	262.50	0.55	4.43		151	69
620	262.15	0.54	4.39		145	69
621	262.79	0.53	4.36		141	69
622	262.30	0.54	4.4		138	69
623	262.79	0.69	5.04		136	70
624	262.20	1	6.45		135	70
625	263.12	1.18	7.43		131	70
626	262.25	1.19	7.82		129	71
627	262.57	1.13	7.81		131	71
628	262.62	1.04	7.59		130	71
629	262.62	0.95	7.22		127	71
630	263.09	0.87	6.83		124	71
631	262.56	0.8	6.49		125	72
632	262.98	0.75	6.17		126	72
633	262.88	0.71	5.95		124	72
634	262.43	0.67	5.71		123	72
635	262.62	0.64	5.49		123	71
636	262.66	0.61	5.3		123	71
637	262.73	0.57	5.07		122	71
638	262.91	0.55	4.89		122	71
639	262.10	0.53	4.76		121	72
640	262.78	0.51	4.64		122	72
641	262.84	0.5	4.56		121	72
642	262.97	0.49	4.49		121	73
643	262.86	0.47	4.36		120	73
644	262.30	0.46	4.26		119	73
645	262.22	0.45	4.23		118	74
646	262.53	0.44	4.16		117	74
647	262.30	0.42	4.03		118	74
648	262.45	0.41	3.95		117	74
649	262.36	0.41	3.91		140	74
650	262.12	0.39	3.86		141	74
651	262.83	0.39	3.79		138	75

652	262.57	0.38	3.73		136	75
653	261.79	0.39	3.78		134	75
654	262.43	0.53	4.58		133	75
655	262.00	0.75	5.63		131	75
656	261.62	0.86	6.08		130	75
657	261.91	0.86	6.17		127	75
658	262.15	0.81	6.1		128	76
659	262.38	0.74	5.89		127	76
660	262.38	0.68	5.63		125	76
661	261.63	0.64	5.44		127	76
662	261.90	0.6	5.29		126	76
663	262.51	0.56	5.08		123	76
664	262.79	0.53	4.89		124	76
665	262.13	0.5	4.76		124	76
666	261.81	0.49	4.67		123	76
667	261.54	0.48	4.61		123	77
668	261.83	0.46	4.52		121	77
669	262.84	0.44	4.4		123	77
670	261.78	0.43	4.3		122	77
671	261.89	0.42	4.23		122	77
672	261.74	0.41	4.21		122	77
673	262.48	0.41	4.17		122	77
674	262.43	0.39	4.08		122	77
675	262.45	0.38	4		119	77
676	262.91	0.37	3.92		120	77
677	262.28	0.35	3.8		119	77
678	261.88	0.34	3.71		119	77
679	261.93	0.33	3.67		119	78
680	261.59	0.33	3.68		151	78
681	261.63	0.33	3.67		140	78
682	261.84	0.32	3.64		137	78
683	261.82	0.31	3.57		135	78
684	261.83	0.32	3.62		134	78
685	261.15	0.48	4.6		132	78
686	261.13	0.72	5.9		131	78
687	261.32	0.79	6.37		130	78
688	260.89	0.76	6.27		130	78
689	261.66	0.71	6.03		129	78
690	261.87	0.66	5.79		126	78
691	261.90	0.62	5.58		125	78
692	261.49	0.57	5.37		127	78
693	261.69	0.53	5.16		126	78

694	261.20	0.49	4.95		124	78
695	261.50	0.46	4.75		124	78
696	261.62	0.44	4.6		123	78
697	261.19	0.43	4.5		123	78
698	261.36	0.41	4.43		122	78
699	261.47	0.4	4.36		122	78
700	261.89	0.39	4.25		122	78
701	261.06	0.38	4.18		121	78
702	261.25	0.37	4.12		119	78
703	261.64	0.35	4.03		122	78
704	261.29	0.34	3.96		119	78
705	260.55	0.34	3.92		120	78
706	261.11	0.33	3.87		121	77
707	261.50	0.32	3.81		117	77
708	261.10	0.31	3.73		120	76
709	260.84	0.3	3.67		118	76
710	260.47	0.3	3.64		118	76
711	260.84	0.3	3.63		146	76
712	260.75	0.29	3.59		136	75
713	260.69	0.28	3.55		134	75
714	260.53	0.28	3.49		132	75
715	260.11	0.3	3.66		131	75
716	261.20	0.44	4.61		129	74
717	260.25	0.6	5.53		128	73
718	260.36	0.64	5.78		126	73
719	260.69	0.62	5.66		125	73
720	260.90	0.58	5.42		124	73
721	260.74	0.54	5.16		124	73
722	260.44	0.5	4.89		124	73
723	260.49	0.47	4.68		123	72
724	260.72	0.44	4.47		121	72
725	260.18	0.41	4.27		121	72
726	260.91	0.38	4.1		120	72
727	260.88	0.37	3.99		121	72
728	260.41	0.36	3.96		120	72
729	260.42	0.35	3.92		118	71
730	260.32	0.34	3.84		119	71
731	260.38	0.33	3.77		119	71
732	260.05	0.32	3.7		117	71
733	261.37	0.31	3.64		117	71
734	260.43	0.31	3.61		115	70
735	260.75	0.31	3.6		115	71

736	260.58	0.3	3.59		117	71
737	260.88	0.29	3.54		116	71
738	260.60	0.29	3.51		115	71
739	260.49	0.29	3.49		115	71
740	260.24	0.28	3.49		114	71
741	260.46	0.28	3.5		115	71
742	260.16	0.28	3.47		139	71
743	260.43	0.27	3.45		132	71
744	259.93	0.27	3.43		130	71
745	260.68	0.27	3.4		128	71
746	258.60	0.3	3.7		125	71
747	257.44	0.39	4.56		139	71
748	255.99	0.42	4.84		170	71
749	254.59	0.41	4.69		188	70
750	253.60	0.39	4.49		211	71
751	251.87	0.51	4.78		232	71
752	250.11	0.96	6.27		246	71
753	249.90	0.83	8.14		255	71
754	247.14	0.5	11.13		263	71
755	246.51	0.2	14.07		270	71
756	245.01	0.08	15.43		275	71
757	243.29	0.06	16.08		279	70
758	241.37	0.06	16.57		283	71
759	241.08	0.07	17.03		286	70
760	238.84	0.08	17.4		290	70
761	237.38	0.08	17.6		294	70
762	236.71	0.08	17.82		295	70
763	233.55	0.09	17.96		295	70
764	232.50	0.09	18.12		298	70
765	231.02	0.1	18.35		298	70
766	229.62	0.1	18.37		300	70
767	227.85	0.1	18.23		302	70
768	228.00	0.1	18.26		305	70
769	227.61	0.11	18.26		289	70
770	227.39	0.11	18.3		258	70
771	227.27	0.11	18.39		242	70
772	226.54	0.11	18.55		231	70
773	226.34	0.1	18.11		224	70
774	226.22	0.07	17.22		219	70
775	225.49	0.04	16.67		214	70
776	225.85	0.02	16.14		210	70
777	225.67	0.04	15.04		207	70

778	225.00	0.24	15.43		204	70
779	225.22	0.44	18.1		202	70
780	225.04	0.33	18.68		201	70
781	224.63	0.26	18.35		200	70
782	225.07	0.21	17.87		198	70
783	225.36	0.16	17.08		196	70
784	225.07	0.55	16.63		194	70
785	225.11	2.04	17.73		192	70
786	225.24	4.48	20.45		189	70
787	225.50	5.2	20.78		188	70
788	225.01	5.2	20.78		185	70
789	225.44	5.2	20.78		183	70
790	225.49	5.2	20.78		181	70
791	225.06	5.2	20.78		180	70
792	224.84	5.2	20.78		178	70
793	225.29	5.2	20.78		175	70
794	224.96	5.2	20.78		174	70
795	224.88	5.2	20.78		173	70
796	224.88	5.2	20.78		172	70
797	224.53	5.2	20.78		171	70
798	225.36	5.2	20.78		169	70
799	225.16	5.2	20.78		166	70
800	225.54	5.2	20.78		165	70
801	224.47	5.2	20.78		164	70
802	224.01	5.2	20.78		165	70
803	225.16	5.2	20.78		163	70
804	225.29	5.2	20.78		161	70
805	224.39	5.2	20.78		161	70
806	225.04	5.2	20.78		163	70
807	224.50	5.2	20.47		160	70
808	224.96	5.2	20.05		161	70
809	224.64	5.2	19.74		157	70
810	224.73	5.2	19.28		158	70
811	225.21	5.2	18.59		158	70
812	224.79	5.2	18.11		155	70
813	225.02	5.2	17.79		154	70
814	225.01	5.2	17.48		154	70
815	224.71	5.2	17.41		155	70
816	225.42	5.17	17.11		153	70
817	224.49	4.87	16.42		151	70
818	224.72	4.72	16.02		154	70
819	224.64	4.62	15.83		153	70

820	224.98	4.49	15.56		149	70
821	224.13	4.38	15.34		151	70
822	224.32	4.28	15.12		151	70
823	224.65	4.2	14.97		148	70
824	224.54	4.13	14.86		146	70
825	224.62	4.04	14.69		151	70
826	224.71	3.92	14.45		150	70
827	224.81	3.78	14.12		150	70
828	224.78	3.63	13.76		147	70
829	224.95	3.56	13.58		147	70
830	225.68	3.52	13.53		146	70
831	224.66	3.46	13.41		147	70
832	224.04	3.33	13.12		144	70
833	224.52	3.17	12.69		146	70
834	225.22	3.11	12.46		145	70
835	225.12	3.07	12.4		143	70
836	224.91	3.03	12.29		142	70
837	223.90	3	12.26		141	70
838	224.01	2.96	12.2		144	70
839	224.11	2.88	12		152	70
840	223.25	2.8	11.78		153	70
841	223.44	2.76	11.66		150	70
842	224.06	2.75	11.66		148	70
843	224.23	2.73	11.68		146	70
844	224.10	2.56	11.71		143	70
845	224.00	2.17	11.21		144	70
846	224.31	1.99	10.91		142	70
847	223.83	1.95	10.82		142	70
848	224.39	1.84	10.44		141	70
849	224.25	1.68	9.81		140	70
850	224.07	1.54	9.2		136	70
851	224.05	1.42	8.67		135	70
852	224.96	1.34	8.24		137	70
853	224.19	1.27	7.9		136	70
854	224.25	1.21	7.59		133	70
855	223.96	1.16	7.33		133	70
856	223.86	1.1	7.04		134	70
857	224.31	1.06	6.81		132	70
858	223.81	1.02	6.63		131	70
859	224.11	0.97	6.39		133	70
860	223.95	0.93	6.15		130	70
861	223.45	0.9	5.99		130	70

862	223.34	0.87	5.84		130	70
863	223.47	0.84	5.7		129	70
864	224.13	0.81	5.55		130	70
865	224.17	0.78	5.38		128	70
866	224.47	0.74	5.22		128	70
867	224.11	0.72	5.1		128	70
868	223.88	0.71	5.05		126	70
869	223.59	0.7	5.01		126	70
870	223.12	0.68	4.94		151	70
871	223.38	0.67	4.87		145	70
872	223.62	0.66	4.84		142	70
873	223.09	0.66	4.87		139	70
874	223.15	0.67	4.92		137	70
875	223.69	0.78	5.48		136	70
876	223.27	1	6.5		134	70
877	223.55	1.12	7.14		134	70
878	223.10	1.13	7.36		131	70
879	223.53	1.08	7.31		130	70
880	223.68	1.02	7.13		131	70
881	223.35	0.95	6.92		130	70
882	223.13	0.89	6.63		128	70
883	223.56	0.81	6.27		126	70
884	223.64	0.76	6		125	70
885	224.18	0.73	5.83		125	70
886	223.68	0.7	5.68		125	70
887	222.81	0.67	5.51		125	70
888	223.48	0.65	5.36		123	70
889	223.15	0.63	5.24		126	70
890	223.35	0.59	5.05		123	70
891	223.61	0.56	4.86		122	70
892	223.46	0.54	4.7		122	70
893	223.25	0.52	4.58		122	70
894	223.21	0.5	4.47		122	70
895	223.07	0.49	4.39		120	70
896	223.52	0.48	4.33		121	70
897	223.10	0.48	4.28		119	70
898	223.75	0.46	4.21		120	70
899	223.08	0.45	4.12		117	70
900	222.58	0.43	3.99		119	70
901	223.10	0.42	3.9		154	70
902	222.26	0.42	3.89		138	70
903	223.30	0.41	3.86		136	70

904	222.74	0.4	3.79		134	70
905	223.16	0.41	3.87		132	70
906	222.78	0.57	4.71		130	70
907	222.86	0.78	5.68		128	70
908	223.11	0.87	6.01		128	70
909	222.31	0.86	6.03		127	70
910	222.88	0.82	5.93		125	70
911	223.06	0.77	5.79		124	70
912	223.06	0.71	5.53		124	70
913	223.11	0.66	5.31		124	70
914	222.87	0.61	5.11		123	70
915	222.66	0.58	4.97		121	70
916	222.78	0.56	4.85		122	70
917	222.97	0.52	4.69		120	70
918	222.81	0.5	4.6		120	70
919	222.64	0.5	4.57		122	70
920	222.65	0.48	4.51		121	70
921	222.52	0.46	4.39		120	70
922	222.46	0.45	4.28		118	70
923	223.04	0.44	4.21		118	70
924	222.91	0.42	4.14		119	70
925	223.10	0.41	4.06		117	70
926	222.99	0.41	4.01		118	70
927	222.87	0.39	3.95		117	70
928	222.95	0.39	3.89		118	70
929	222.96	0.38	3.86		117	70
930	222.49	0.38	3.82		118	70
931	222.28	0.37	3.82		117	70
932	221.75	0.37	3.79		146	70
933	222.21	0.36	3.72		136	70
934	222.16	0.35	3.66		133	70
935	223.59	0.34	3.62		131	70
936	223.09	0.36	3.74		130	70
937	222.67	0.49	4.61		127	70
938	222.76	0.68	5.6		127	70
939	222.06	0.73	5.87		124	70
940	222.86	0.71	5.75		123	70
941	222.27	0.67	5.5		121	70
942	222.80	0.62	5.23		121	70
943	221.52	0.58	4.94		121	70
944	221.99	0.53	4.7		119	70
945	223.02	0.49	4.45		119	70

946	222.82	0.47	4.25		120	70
947	222.67	0.44	4.1		120	70
948	222.46	0.42	3.97		119	70
949	222.35	0.41	3.89		118	70
950	222.34	0.41	3.86		116	70
951	222.70	0.39	3.81		117	70
952	222.23	0.38	3.73		118	70
953	222.16	0.37	3.67		117	70
954	222.64	0.37	3.66		118	70
955	223.03	0.36	3.66		115	70
956	222.17	0.36	3.63		116	70
957	222.68	0.35	3.62		117	70
958	221.94	0.35	3.64		114	70
959	222.67	0.35	3.62		116	70
960	222.57	0.34	3.58		115	70
961	222.24	0.34	3.57		116	70
962	222.54	0.33	3.56		113	70
963	222.90	0.33	3.51		140	70
964	223.17	0.31	3.43		133	70
965	222.20	0.3	3.35		130	70
966	221.99	0.3	3.29		129	70
967	221.06	0.32	3.49		126	70
968	222.25	0.44	4.43		125	70
969	222.24	0.55	5.18		123	70
970	222.45	0.57	5.29		122	70
971	222.33	0.55	5.12		120	70
972	222.32	0.51	4.87		121	70
973	221.62	0.48	4.63		118	70
974	223.26	0.45	4.38		117	70
975	222.70	0.41	4.12		118	70
976	222.42	0.38	3.88		118	70
977	222.50	0.36	3.69		116	70
978	222.75	0.34	3.52		116	70
979	222.38	0.32	3.35		115	70
980	221.72	0.31	3.21		114	70
981	222.30	0.29	3.08		114	70
982	222.06	0.28	2.95		113	70
983	222.30	0.27	2.86		114	70
984	222.22	0.26	2.83		112	70
985	221.94	0.26	2.81		112	70
986	222.11	0.26	2.83		112	70
987	222.57	0.27	2.89		112	70

988	222.34	0.27	2.94		113	70
989	221.72	0.27	2.98		113	70
990	222.55	0.27	3		114	70
991	222.37	0.28	3.05		113	70
992	222.00	0.28	3.13		110	70
993	221.77	0.28	3.17		113	70
994	222.21	0.29	3.21		133	70
995	222.18	0.28	3.24		128	70
996	222.51	0.29	3.29		126	70
997	222.02	0.29	3.32		124	70
998	222.30	0.32	3.62		122	70
999	221.77	0.43	4.45		122	70
1000	221.42	0.49	4.85		119	70
1001	222.81	0.49	4.8		119	70
1002	222.51	0.46	4.59		119	70
1003	221.94	0.43	4.32		118	70
1004	221.70	0.4	4.08		116	70
1005	221.75	0.37	3.88		115	70
1006	220.48	0.35	3.69		115	70
1007	220.06	0.33	3.52		118	70
1008	218.84	0.31	3.36		141	70
1009	217.74	0.29	3.22		170	70
1010	216.90	0.28	3.1		188	70
1011	215.88	0.28	3.05		211	70
1012	215.27	0.51	4.09		230	70
1013	213.04	1.14	6.19		241	70
1014	212.67	1	7.94		249	70
1015	211.92	0.6	10.69		256	70
1016	209.98	0.24	13.8		261	70
1017	209.07	0.09	14.98		266	70
1018	207.56	0.06	15.34		270	70
1019	205.33	0.06	15.65		276	70
1020	203.94	0.07	15.94		281	70
1021	202.07	0.08	16.23		288	70
1022	200.11	0.09	16.57		291	70
1023	197.75	0.1	17.06		290	70
1024	197.52	0.11	17.59		294	70
1025	196.63	0.13	18.2		293	70
1026	194.10	0.16	18.69		294	70
1027	192.21	0.17	18.78		294	70
1028	191.93	0.16	18.78		294	70
1029	191.11	0.16	18.86		295	70

1030	190.23	0.17	18.92		277	70
1031	189.84	0.16	18.9		251	70
1032	189.80	0.15	18.83		236	70
1033	188.96	0.15	18.74		227	70
1034	189.07	0.13	18.36		220	70
1035	188.62	0.09	17.83		215	70
1036	188.15	0.06	17.59		211	70
1037	188.20	0.04	17.36		207	70
1038	188.22	0.05	16.32		204	70
1039	188.22	0.36	16.86		201	70
1040	188.16	0.69	19.85		199	70
1041	188.12	0.47	20.62		198	70
1042	187.71	0.31	20.42		197	70
1043	188.11	0.21	19.87		195	70
1044	187.34	0.18	18.92		193	70
1045	187.59	0.83	18.66		191	70
1046	187.49	2.76	20.22		189	70
1047	187.96	5.2	20.78		188	70
1048	187.34	5.2	20.78		185	70
1049	187.21	5.2	20.78		184	70
1050	187.37	5.2	20.78		182	70
1051	187.57	5.2	20.78		181	70
1052	187.48	5.2	20.78		178	70
1053	187.51	5.2	20.78		177	70
1054	187.56	5.2	20.78		176	70
1055	186.86	5.2	20.78		175	70
1056	185.84	5.2	20.78		175	70
1057	187.89	5.2	20.78		173	70
1058	186.02	5.2	20.78		170	70
1059	187.46	5.2	20.78		169	70
1060	187.20	5.2	20.78		167	70
1061	187.06	5.2	20.78		166	70
1062	187.43	5.2	20.78		167	70
1063	186.46	5.2	20.78		165	70
1064	187.18	5.2	20.78		165	70
1065	187.27	5.2	20.78		163	70
1066	186.96	5.2	20.78		164	70
1067	186.51	5.2	20.78		162	70
1068	186.99	5.2	20.78		164	70
1069	187.32	5.2	20.78		163	70
1070	186.95	5.2	20.78		159	70
1071	186.25	5.2	20.78		161	70

1072	187.17	5.2	20.78		159	70
1073	187.69	5.2	20.78		162	70
1074	187.18	5.2	20.78		156	70
1075	187.08	5.2	20.75		157	70
1076	186.06	5.2	20.51		156	70
1077	186.93	5.2	20.06		156	70
1078	186.96	5.2	19.5		156	70
1079	187.05	5.2	19.15		152	70
1080	187.37	5.2	18.91		156	70
1081	187.12	5.2	18.38		156	70
1082	187.27	5.2	17.87		154	70
1083	187.08	5.2	17.34		152	70
1084	187.27	5.2	16.9		152	70
1085	186.43	5.2	16.59		152	70
1086	186.14	5.2	16.34		152	70
1087	187.44	5.2	16.17		148	70
1088	186.49	5.2	15.92		152	70
1089	186.89	5.12	15.6		150	70
1090	186.94	4.94	15.15		147	70
1091	186.65	4.69	14.57		146	70
1092	187.16	4.57	14.23		148	70
1093	186.36	4.51	14.08		150	70
1094	187.07	4.43	13.89		144	70
1095	186.47	4.31	13.59		146	70
1096	187.05	4.14	13.2		147	70
1097	186.75	4.06	12.99		145	70
1098	186.40	3.98	12.8		145	70
1099	186.64	3.85	12.48		144	70
1100	186.11	3.72	12.16		161	70
1101	185.66	3.63	11.91		153	70
1102	185.72	3.6	11.83		151	70
1103	185.89	3.56	11.74		148	70
1104	185.93	3.51	11.65		147	70
1105	186.03	3.27	11.49		145	70
1106	186.14	2.66	10.83		145	70
1107	185.78	2.28	10.36		142	70
1108	185.51	2.19	10.3		140	70
1109	185.99	2.2	10.3		140	70
1110	186.14	2.15	10.12		139	70
1111	185.62	2.02	9.65		139	70
1112	186.60	1.87	9.09		139	70
1113	186.21	1.76	8.61		136	70

1114	186.10	1.67	8.23		136	70
1115	186.51	1.6	7.92		136	70
1116	185.79	1.54	7.68		135	70
1117	186.18	1.49	7.48		134	70
1118	186.08	1.41	7.18		133	70
1119	185.98	1.34	6.88		132	70
1120	185.88	1.31	6.73		133	70
1121	185.92	1.27	6.57		132	70
1122	186.55	1.23	6.38		129	70
1123	186.10	1.2	6.25		128	70
1124	186.05	1.17	6.12		128	70
1125	186.20	1.14	5.99		128	70
1126	186.11	1.09	5.83		129	70
1127	186.02	1.06	5.68		127	70
1128	185.95	1.03	5.55		128	70
1129	185.57	1.01	5.49		128	70
1130	185.85	1	5.43		127	70
1131	185.55	0.98	5.36		155	70
1132	185.55	0.96	5.29		147	70
1133	185.55	0.93	5.19		143	70
1134	185.93	0.92	5.15		140	70
1135	185.53	0.93	5.16		137	70
1136	185.38	1.01	5.58		137	70
1137	185.62	1.14	6.52		133	70
1138	185.44	1.22	7.17		132	70
1139	184.96	1.24	7.38		132	70
1140	185.79	1.22	7.38		130	70
1141	185.57	1.17	7.24		129	70
1142	185.47	1.12	7.06		128	70
1143	185.96	1.05	6.77		127	70
1144	186.04	0.98	6.47		126	70
1145	185.46	0.92	6.18		125	70
1146	186.14	0.89	5.97		126	70
1147	186.13	0.85	5.81		126	70
1148	185.39	0.81	5.59		124	70
1149	185.41	0.77	5.4		123	70
1150	185.74	0.75	5.28		123	70
1151	185.84	0.72	5.12		123	70
1152	185.57	0.69	4.95		122	70
1153	185.73	0.67	4.84		123	70
1154	185.64	0.66	4.75		120	70
1155	185.52	0.64	4.63		121	70

1156	185.62	0.62	4.54		119	70
1157	185.63	0.6	4.45		121	70
1158	185.43	0.58	4.33		120	70
1159	185.26	0.56	4.23		119	70
1160	185.09	0.56	4.16		117	70
1161	185.49	0.55	4.12		118	70
1162	185.25	0.54	4.06		153	70
1163	185.28	0.52	3.99		139	70
1164	184.78	0.51	3.9		136	70
1165	185.00	0.49	3.8		133	70
1166	185.51	0.49	3.79		132	70
1167	185.50	0.61	4.39		129	70
1168	185.57	0.77	5.35		128	70
1169	185.03	0.84	5.81		126	70
1170	185.79	0.83	5.81		124	70
1171	185.38	0.79	5.62		124	70
1172	185.33	0.74	5.41		123	70
1173	185.60	0.71	5.24		122	70
1174	185.99	0.67	5.01		121	70
1175	185.75	0.62	4.76		121	70
1176	185.35	0.58	4.56		120	70
1177	185.09	0.55	4.39		119	70
1178	184.93	0.53	4.24		118	71
1179	185.25	0.51	4.13		118	71
1180	185.37	0.49	4.03		117	70
1181	185.36	0.47	3.9		119	71
1182	185.55	0.45	3.79		118	71
1183	185.70	0.45	3.75		118	70
1184	184.63	0.44	3.72		117	70
1185	185.72	0.44	3.73		115	70
1186	185.68	0.44	3.75		117	70
1187	185.55	0.44	3.77		118	70
1188	185.87	0.44	3.77		115	70
1189	185.26	0.43	3.75		114	70
1190	185.23	0.43	3.71		115	70
1191	185.45	0.42	3.71		116	70
1192	184.87	0.43	3.73		115	70
1193	185.36	0.42	3.72		144	70
1194	185.44	0.41	3.69		135	70
1195	185.60	0.41	3.65		132	70
1196	185.00	0.4	3.6		130	70
1197	184.82	0.4	3.64		128	70

1198	185.21	0.5	4.26		127	70
1199	184.98	0.67	5.22		124	70
1200	185.16	0.73	5.63		124	70
1201	185.48	0.73	5.59		123	70
1202	185.02	0.69	5.36		122	70
1203	185.10	0.66	5.13		121	70
1204	184.98	0.62	4.9		120	70
1205	185.31	0.58	4.66		119	70
1206	185.25	0.55	4.45		119	70
1207	184.84	0.51	4.24		118	70
1208	185.21	0.48	4.03		117	70
1209	185.05	0.45	3.82		116	70
1210	185.17	0.43	3.66		117	70
1211	184.90	0.41	3.51		114	70
1212	185.32	0.39	3.37		114	70
1213	185.48	0.37	3.22		113	70
1214	184.93	0.35	3.08		113	70
1215	185.36	0.34	2.98		114	70
1216	184.89	0.33	2.91		113	70
1217	184.98	0.31	2.81		114	70
1218	185.50	0.3	2.74		113	70
1219	185.30	0.3	2.72		113	70
1220	184.85	0.31	2.78		112	70
1221	185.23	0.31	2.83		112	70
1222	184.74	0.32	2.89		110	70
1223	184.98	0.32	2.89		111	70
1224	185.18	0.32	2.91		135	70
1225	184.77	0.32	2.98		130	70
1226	185.65	0.33	3.05		127	70
1227	185.18	0.33	3.09		125	70
1228	185.06	0.35	3.26		124	70
1229	185.25	0.44	3.98		122	70
1230	185.36	0.56	4.6		119	70
1231	185.17	0.6	4.73		119	70
1232	184.97	0.58	4.6		119	70
1233	185.26	0.55	4.41		117	70
1234	184.93	0.52	4.2		116	70
1235	185.28	0.48	3.95		116	70
1236	184.78	0.45	3.72		114	70
1237	184.78	0.42	3.51		115	70
1238	184.82	0.39	3.33		114	70
1239	184.71	0.38	3.2		113	70

1240	185.24	0.36	3.08		113	70
1241	184.49	0.34	2.96		112	70
1242	184.92	0.33	2.85		111	70
1243	184.65	0.31	2.75		112	70
1244	184.77	0.3	2.66		111	70
1245	185.19	0.29	2.59		111	70
1246	185.39	0.27	2.52		110	70
1247	184.89	0.27	2.46		109	70
1248	184.93	0.26	2.4		110	70
1249	184.81	0.24	2.31		109	70
1250	185.55	0.23	2.22		109	70
1251	185.00	0.23	2.19		109	70
1252	184.14	0.23	2.18		109	70
1253	184.70	0.22	2.17		107	70
1254	184.26	0.22	2.13		107	70
1255	184.66	0.21	2.1		129	70
1256	184.69	0.21	2.08		127	70
1257	185.38	0.21	2.05		124	70
1258	185.20	0.2	2.02		121	70
1259	185.31	0.23	2.24		120	71
1260	184.69	0.35	3.22		119	71
1261	184.79	0.45	3.93		118	70
1262	185.00	0.46	4.04		116	70
1263	184.69	0.44	3.89		115	70
1264	184.54	0.41	3.68		114	70
1265	184.58	0.38	3.49		113	70
1266	184.52	0.36	3.33		113	70
1267	184.42	0.34	3.18		112	70
1268	184.40	0.32	3.03		112	70
1269	183.13	0.31	2.92		109	71
1270	182.24	0.29	2.84		131	71
1271	180.91	0.28	2.75		163	71
1272	179.90	0.27	2.67		181	71
1273	178.69	0.26	2.6		204	71
1274	178.02	0.32	2.92		228	71
1275	177.13	0.71	4.59		243	71
1276	174.86	0.96	6.32		251	71
1277	173.69	0.82	8.4		257	71
1278	172.66	0.49	12.14		262	71
1279	172.56	0.21	14.54		267	71
1280	170.31	0.1	15.14		271	71
1281	169.33	0.07	15.33		276	71

1282	168.51	0.08	15.59		279	71
1283	166.14	0.09	15.93		283	71
1284	164.81	0.1	16.28		286	71
1285	163.74	0.1	16.62		290	71
1286	162.17	0.1	16.9		292	71
1287	160.82	0.11	17.16		290	71
1288	159.56	0.12	17.39		288	71
1289	157.82	0.13	17.61		290	71
1290	157.26	0.15	17.77		290	71
1291	156.49	0.17	18		290	71
1292	155.16	0.18	18.16		289	71
1293	155.50	0.18	18.13		256	70
1294	155.03	0.18	18.2		239	70
1295	154.50	0.17	18.27		228	70
1296	154.38	0.15	17.98		220	70
1297	154.22	0.11	16.93		216	70
1298	153.92	0.06	15.89		211	70
1299	153.67	0.04	15.32		207	70
1300	153.80	0.03	14.63		204	70
1301	153.03	0.09	14.04		201	70
1302	153.59	0.38	15.89		199	70
1303	153.46	0.5	17.8		198	70
1304	153.38	0.42	17.92		196	70
1305	153.38	0.37	17.7		194	70
1306	152.63	0.29	17.14		192	70
1307	152.91	0.34	16.51		190	70
1308	152.71	1.22	17.09		188	70
1309	152.56	2.93	19.25		186	70
1310	152.66	4.94	20.78		185	70
1311	152.52	5.2	20.78		182	70
1312	152.65	5.2	20.78		180	70
1313	152.89	5.2	20.78		178	70
1314	152.42	5.2	20.78		177	70
1315	152.29	5.2	20.78		175	70
1316	152.29	5.2	20.78		173	70
1317	152.75	5.2	20.78		174	70
1318	152.54	5.2	20.78		170	70
1319	152.75	5.2	20.78		170	70
1320	152.60	5.2	20.78		168	70
1321	152.55	5.2	20.78		169	71
1322	152.39	5.2	20.78		167	71
1323	152.55	5.2	20.78		165	71

1324	152.34	5.2	20.78		164	71
1325	152.58	5.2	20.78		163	71
1326	152.01	5.2	20.78		163	71
1327	152.38	5.2	20.78		163	71
1328	152.58	5.2	20.78		163	71
1329	152.72	5.2	20.78		160	71
1330	152.14	5.2	20.78		160	71
1331	152.59	5.2	20.78		159	71
1332	152.40	5.2	20.78		160	71
1333	152.13	5.2	20.78		158	71
1334	152.49	5.2	20.78		158	71
1335	152.12	5.2	20.78		159	71
1336	152.33	5.2	20.78		156	71
1337	152.64	5.2	20.68		158	71
1338	152.94	5.2	20.13		155	71
1339	152.66	5.2	19.41		156	71
1340	152.63	5.2	18.91		153	71
1341	152.44	5.2	18.75		152	71
1342	152.17	5.2	18.35		151	71
1343	152.70	5.2	17.8		152	71
1344	152.76	5.2	17.2		150	71
1345	152.59	5.2	16.46		153	71
1346	153.04	5.2	15.92		149	71
1347	152.66	5.2	15.61		149	71
1348	152.62	5.18	15.14		147	71
1349	152.49	5.04	14.73		150	71
1350	152.40	4.92	14.36		146	71
1351	152.86	4.77	13.97		147	71
1352	153.14	4.61	13.58		143	71
1353	152.50	4.49	13.26		146	71
1354	152.50	4.4	13.01		144	71
1355	153.12	4.29	12.71		140	71
1356	152.68	4.13	12.34		142	71
1357	152.95	3.96	11.92		143	71
1358	152.95	3.84	11.61		141	71
1359	153.12	3.77	11.42		141	72
1360	152.45	3.73	11.29		139	72
1361	152.17	3.68	11.16		138	72
1362	152.04	3.58	10.96		140	72
1363	152.24	3.52	10.8		154	72
1364	151.90	3.44	10.61		152	72
1365	152.00	3.31	10.29		149	72

1366	151.99	3.3	10.22		147	72
1367	151.90	3.39	10.45		145	72
1368	151.54	3.23	10.73		143	72
1369	152.20	2.84	10.78		143	72
1370	152.22	2.66	10.93		139	72
1371	151.76	2.63	11.04		139	72
1372	152.62	2.57	10.88		138	71
1373	152.05	2.48	10.56		137	71
1374	151.60	2.4	10.21		137	71
1375	151.47	2.31	9.85		135	71
1376	151.37	2.19	9.44		133	71
1377	151.50	2.06	8.99		134	71
1378	151.78	1.95	8.56		134	71
1379	152.06	1.87	8.22		133	71
1380	151.99	1.81	7.94		133	71
1381	152.36	1.73	7.66		130	71
1382	151.64	1.64	7.35		131	71
1383	151.46	1.56	7.04		131	71
1384	151.31	1.5	6.8		128	71
1385	151.86	1.48	6.69		129	71
1386	151.85	1.47	6.6		126	71
1387	151.50	1.42	6.43		125	71
1388	151.75	1.35	6.18		127	71
1389	151.97	1.28	5.92		124	71
1390	151.94	1.22	5.69		126	71
1391	151.90	1.19	5.56		125	71
1392	151.69	1.17	5.46		124	71
1393	151.03	1.16	5.38		124	71
1394	150.75	1.14	5.31		148	71
1395	150.90	1.12	5.22		143	71
1396	151.37	1.08	5.09		140	71
1397	151.28	1.05	4.97		137	71
1398	151.35	1.09	5.09		135	71
1399	151.12	1.3	6.06		132	71
1400	151.57	1.49	7.22		131	71
1401	151.05	1.57	7.75		129	71
1402	151.32	1.54	7.79		127	71
1403	151.07	1.47	7.64		127	71
1404	150.63	1.4	7.4		125	71
1405	151.46	1.32	7.11		125	71
1406	151.18	1.24	6.81		124	71
1407	151.10	1.16	6.51		123	71

1408	150.79	1.1	6.21		123	71
1409	151.00	1.05	6.01		123	71
1410	151.25	1.03	5.88		122	71
1411	151.23	1	5.77		120	71
1412	151.14	0.97	5.64		122	71
1413	151.08	0.94	5.48		120	71
1414	151.12	0.9	5.3		119	71
1415	150.70	0.87	5.15		119	71
1416	151.14	0.84	5.02		120	71
1417	151.05	0.82	4.91		119	71
1418	151.03	0.81	4.84		119	71
1419	150.83	0.79	4.76		118	71
1420	151.05	0.77	4.67		118	71
1421	150.61	0.76	4.58		117	71
1422	150.72	0.73	4.48		118	71
1423	150.69	0.71	4.37		116	71
1424	150.41	0.7	4.28		117	71
1425	150.64	0.68	4.2		139	71
1426	150.62	0.67	4.12		136	71
1427	151.04	0.66	4.06		132	71
1428	150.50	0.64	3.99		130	71
1429	150.45	0.7	4.22		128	71
1430	150.60	0.92	5.25		126	71
1431	150.60	1.13	6.17		125	71
1432	150.60	1.17	6.43		123	71
1433	150.74	1.13	6.28		122	71
1434	150.84	1.07	6.03		121	71
1435	150.68	1.01	5.79		119	71
1436	150.15	0.95	5.57		119	71
1437	150.77	0.89	5.3		119	71
1438	150.63	0.83	5.03		117	71
1439	150.95	0.78	4.81		117	71
1440	150.28	0.73	4.57		117	71
1441	150.90	0.68	4.34		115	71
1442	150.79	0.64	4.14		115	71
1443	151.01	0.61	3.97		115	71
1444	150.57	0.58	3.81		114	71
1445	150.64	0.55	3.63		114	71
1446	150.90	0.52	3.49		114	71
1447	150.64	0.5	3.37		113	71
1448	150.66	0.48	3.25		112	71
1449	150.56	0.46	3.13		113	71

1450	150.40	0.45	3.03		111	71
1451	150.09	0.44	2.97		110	71
1452	150.67	0.43	2.93		111	71
1453	150.24	0.43	2.91		111	71
1454	150.61	0.43	2.9		111	70
1455	150.73	0.42	2.89		114	71
1456	150.21	0.42	2.9		135	71
1457	150.60	0.44	2.97		131	71
1458	150.40	0.45	3.09		128	71
1459	150.16	0.47	3.22		126	71
1460	150.42	0.54	3.69		124	71
1461	150.78	0.77	4.94		123	70
1462	151.02	0.94	5.78		121	70
1463	150.42	0.97	5.93		120	71
1464	150.65	0.94	5.83		117	71
1465	150.47	0.9	5.64		118	71
1466	150.35	0.84	5.37		116	71
1467	150.81	0.78	5.12		116	71
1468	150.52	0.73	4.87		116	71
1469	151.14	0.68	4.62		115	71
1470	150.32	0.64	4.39		114	71
1471	150.14	0.6	4.19		114	71
1472	150.12	0.57	4		113	71
1473	150.27	0.53	3.82		114	71
1474	151.03	0.51	3.67		112	71
1475	150.54	0.49	3.58		112	71
1476	150.69	0.48	3.48		111	71
1477	150.74	0.46	3.35		110	71
1478	150.19	0.43	3.21		110	71
1479	150.78	0.41	3.09		111	71
1480	150.37	0.4	3		109	71
1481	150.27	0.39	2.92		110	71
1482	150.17	0.38	2.85		109	71
1483	150.98	0.37	2.8		108	71
1484	150.00	0.36	2.76		109	71
1485	150.53	0.35	2.72		108	71
1486	150.38	0.35	2.69		126	71
1487	150.01	0.34	2.68		130	71
1488	150.63	0.35	2.71		127	71
1489	150.23	0.35	2.76		124	71
1490	149.95	0.36	2.82		122	71
1491	151.27	0.43	3.37		120	71

1492	150.11	0.64	4.59		119	71
1493	150.53	0.8	5.36		116	71
1494	150.88	0.83	5.48		116	71
1495	150.90	0.8	5.33		114	71
1496	150.49	0.75	5.07		114	71
1497	149.68	0.69	4.78		114	71
1498	150.41	0.65	4.52		113	71
1499	149.99	0.61	4.29		112	71
1500	149.88	0.56	4.05		112	71
1501	151.13	0.52	3.83		110	71
1502	150.70	0.49	3.62		110	71
1503	150.77	0.46	3.47		109	71
1504	149.49	0.44	3.34		110	71
1505	150.94	0.43	3.21		108	71
1506	149.89	0.41	3.09		109	71
1507	151.31	0.39	2.98		108	71
1508	149.47	0.37	2.89		107	71
1509	149.28	0.36	2.79		106	71
1510	150.70	0.34	2.71		106	71
1511	150.09	0.33	2.63		107	71
1512	150.64	0.32	2.55		105	71
1513	149.98	0.31	2.47		105	71
1514	150.61	0.3	2.41		105	71
1515	150.15	0.29	2.35		105	71
1516	150.62	0.28	2.32		105	71
1517	149.77	0.27	2.27		129	71
1518	150.49	0.27	2.24		125	71
1519	150.02	0.26	2.21		122	71
1520	149.81	0.25	2.17		119	71
1521	149.71	0.26	2.18		117	71
1522	150.63	0.35	2.85		116	71
1523	150.47	0.55	4.26		114	71
1524	150.07	0.66	4.89		114	71
1525	149.73	0.67	4.91		113	71
1526	149.60	0.64	4.75		112	71
1527	147.97	0.6	4.55		129	71
1528	147.83	0.57	4.34		162	71
1529	146.21	0.53	4.14		183	71
1530	144.46	0.5	3.93		205	71
1531	143.56	0.49	3.86		229	71
1532	142.66	0.73	4.78		244	71
1533	141.77	1.08	6.38		254	71

1534	140.55	0.93	8.19		259	71
1535	139.09	0.47	11.3		263	71
1536	138.54	0.19	13.94		266	71
1537	137.48	0.1	15.07		269	71
1538	135.98	0.09	15.43		273	71
1539	134.72	0.09	15.56		277	71
1540	133.43	0.09	15.63		281	71
1541	132.19	0.09	15.72		285	71
1542	131.02	0.09	15.87		289	71
1543	129.75	0.1	16.16		290	71
1544	127.93	0.11	16.52		293	71
1545	127.05	0.12	16.85		294	71
1546	125.90	0.13	17.21		294	71
1547	124.79	0.14	17.48		295	71
1548	124.70	0.14	17.64		296	71
1549	123.89	0.15	17.74		282	71
1550	123.65	0.14	17.64		253	71
1551	123.19	0.13	17.47		237	71
1552	122.84	0.12	17.38		227	71
1553	122.54	0.11	16.95		220	71
1554	122.42	0.08	15.7		216	71
1555	122.26	0.05	14.64		212	71
1556	121.92	0.03	14.01		208	71
1557	121.68	0.02	13.32		205	71
1558	121.82	0.08	13.21		202	71
1559	121.69	0.27	15.43		200	71
1560	121.93	0.34	17.37		199	71
1561	121.82	0.31	17.87		198	71
1562	121.64	0.27	17.95		196	71
1563	121.29	0.23	17.62		194	71
1564	121.47	0.5	17.39		191	71
1565	121.18	1.82	18.46		189	71
1566	121.37	3.81	20.59		188	71
1567	120.66	5.2	20.78		185	71
1568	121.17	5.2	20.78		184	71
1569	121.00	5.2	20.78		181	71
1570	120.90	5.2	20.78		180	71
1571	120.56	5.2	20.78		178	71
1572	120.89	5.2	20.78		176	71
1573	121.10	5.2	20.78		176	71
1574	120.75	5.2	20.78		173	71
1575	120.43	5.2	20.78		171	71

1576	120.59	5.2	20.78		168	71
1577	120.52	5.2	20.78		168	71
1578	120.54	5.2	20.78		169	71
1579	120.98	5.2	20.78		165	71
1580	120.95	5.2	20.78		166	71
1581	121.01	5.2	20.78		166	71
1582	119.74	5.2	20.78		161	71
1583	121.31	5.2	20.78		161	71
1584	120.14	5.2	20.78		160	71
1585	121.36	5.2	20.78		159	71
1586	121.01	5.2	20.78		158	71
1587	121.42	5.2	20.35		158	71
1588	121.27	5.2	19.53		158	71
1589	120.85	5.2	18.88		154	71
1590	120.82	5.2	18.35		153	71
1591	120.87	5.2	17.94		156	71
1592	121.33	5.2	17.47		153	71
1593	120.81	5.2	16.89		152	71
1594	120.92	5.2	16.22		154	71
1595	120.65	5.12	15.79		152	71
1596	121.32	5.02	15.51		149	71
1597	120.69	4.91	15.24		149	71
1598	120.48	4.76	14.88		148	71
1599	120.72	4.54	14.36		149	71
1600	120.89	4.34	13.85		146	71
1601	120.84	4.18	13.46		146	71
1602	120.89	4.04	13.12		150	71
1603	120.80	3.96	12.88		145	71
1604	120.79	3.87	12.66		143	71
1605	121.01	3.74	12.35		145	71
1606	121.05	3.68	12.18		142	71
1607	120.86	3.66	12.12		142	71
1608	121.04	3.6	12		144	71
1609	121.27	3.52	11.83		140	71
1610	120.52	3.4	11.55		139	71
1611	120.93	3.28	11.25		141	71
1612	120.71	3.19	11.01		139	71
1613	120.90	3.1	10.78		138	71
1614	121.21	3.02	10.58		137	71
1615	120.96	2.95	10.4		138	71
1616	120.86	2.92	10.29		138	71
1617	120.85	2.89	10.21		137	71

1618	120.23	2.83	10.03		135	71
1619	120.61	2.77	9.86		149	71
1620	121.05	2.72	9.74		153	71
1621	120.31	2.66	9.58		149	71
1622	121.18	2.64	9.51		146	71
1623	120.35	2.63	9.48		144	71
1624	120.34	2.68	9.62		143	71
1625	120.86	2.53	9.71		139	71
1626	120.09	2.2	9.58		140	71
1627	120.33	1.99	9.5		138	71
1628	120.43	1.92	9.46		137	71
1629	120.28	1.87	9.31		136	71
1630	120.62	1.78	8.96		134	71
1631	120.49	1.71	8.61		132	71
1632	120.16	1.65	8.35		132	71
1633	120.53	1.62	8.17		130	71
1634	120.50	1.58	7.97		130	71
1635	120.71	1.5	7.7		130	71
1636	120.03	1.43	7.4		129	71
1637	120.58	1.37	7.14		127	71
1638	120.94	1.32	6.91		128	71
1639	120.89	1.27	6.67		127	71
1640	120.11	1.23	6.48		126	71
1641	120.40	1.2	6.32		125	71
1642	120.36	1.17	6.17		126	71
1643	119.64	1.14	6.02		126	71
1644	120.06	1.1	5.85		124	71
1645	120.60	1.07	5.7		124	71
1646	120.85	1.04	5.57		123	71
1647	120.02	1.02	5.46		121	71
1648	120.43	0.99	5.34		121	71
1649	120.74	0.97	5.24		122	71
1650	120.53	0.95	5.15		149	71
1651	120.32	0.93	5.04		146	71
1652	120.85	0.91	4.93		140	71
1653	120.30	0.89	4.85		136	71
1654	120.32	0.89	4.82		132	71
1655	120.17	0.96	5.07		130	71
1656	120.24	1.09	5.79		128	71
1657	119.60	1.16	6.41		126	71
1658	120.18	1.16	6.57		125	71
1659	120.83	1.12	6.47		125	71

1660	120.51	1.07	6.27		124	71
1661	120.11	1	6.01		122	71
1662	120.08	0.95	5.75		121	71
1663	120.35	0.9	5.53		120	71
1664	120.28	0.85	5.31		120	71
1665	120.32	0.8	5.08		120	71
1666	120.29	0.76	4.88		118	71
1667	119.82	0.72	4.67		117	71
1668	120.24	0.68	4.46		117	71
1669	119.97	0.65	4.28		116	71
1670	120.33	0.61	4.08		115	71
1671	120.33	0.58	3.9		116	71
1672	119.99	0.55	3.73		115	71
1673	119.98	0.53	3.6		116	71
1674	120.36	0.52	3.51		114	71
1675	119.81	0.5	3.43		115	71
1676	120.13	0.5	3.4		114	71
1677	119.83	0.51	3.42		113	71
1678	120.47	0.52	3.47		115	71
1679	120.32	0.53	3.54		112	71
1680	119.61	0.54	3.59		114	71
1681	120.26	0.55	3.64		144	71
1682	120.19	0.56	3.72		137	71
1683	119.80	0.56	3.78		133	71
1684	119.95	0.56	3.8		130	71
1685	120.24	0.57	3.83		126	71
1686	119.87	0.65	4.24		125	71
1687	120.51	0.75	5.02		123	71
1688	120.24	0.78	5.44		122	71
1689	119.93	0.75	5.38		121	71
1690	119.79	0.71	5.18		120	71
1691	120.17	0.66	4.91		118	71
1692	120.46	0.61	4.62		117	71
1693	119.95	0.57	4.37		116	71
1694	119.45	0.54	4.16		116	71
1695	120.12	0.51	3.96		115	71
1696	120.26	0.48	3.78		114	71
1697	120.40	0.45	3.6		114	71
1698	119.78	0.43	3.44		113	71
1699	120.05	0.41	3.31		112	71
1700	120.44	0.39	3.17		111	71
1701	120.34	0.38	3.02		112	70

1702	121.16	0.36	2.91		111	70
1703	120.40	0.35	2.82		111	70
1704	120.52	0.33	2.74		110	70
1705	120.54	0.32	2.66		110	71
1706	120.07	0.32	2.59		110	70
1707	120.46	0.31	2.53		109	70
1708	119.82	0.3	2.46		108	71
1709	119.75	0.29	2.41		109	71
1710	119.77	0.29	2.38		108	71
1711	120.39	0.28	2.33		107	71
1712	119.33	0.27	2.3		135	71
1713	119.63	0.27	2.26		132	70
1714	120.15	0.26	2.21		128	71
1715	120.08	0.26	2.19		125	71
1716	120.31	0.27	2.24		121	71
1717	119.56	0.38	2.91		120	71
1718	119.82	0.58	4.37		118	71
1719	120.18	0.69	5.12		118	71
1720	119.83	0.7	5.29		116	70
1721	120.25	0.67	5.17		116	70
1722	120.28	0.64	4.98		114	70
1723	119.39	0.6	4.78		114	70
1724	120.66	0.56	4.55		113	70
1725	120.54	0.52	4.32		112	70
1726	119.98	0.49	4.11		111	70
1727	120.39	0.46	3.91		110	70
1728	120.09	0.44	3.72		111	71
1729	119.65	0.41	3.55		110	70
1730	120.58	0.39	3.4		110	70
1731	119.99	0.37	3.24		110	71
1732	119.91	0.36	3.09		108	70
1733	119.94	0.34	2.98		108	71
1734	119.53	0.33	2.88		108	70
1735	120.31	0.32	2.79		107	70
1736	119.75	0.31	2.72		106	70
1737	120.26	0.3	2.65		106	70
1738	119.71	0.29	2.59		105	70
1739	119.60	0.28	2.53		106	70
1740	119.51	0.27	2.46		105	70
1741	119.73	0.27	2.4		106	70
1742	119.89	0.26	2.35		105	70
1743	119.25	0.26	2.31		129	70

1744	120.28	0.25	2.27		127	70
1745	119.74	0.25	2.24		123	70
1746	119.69	0.24	2.21		119	70
1747	119.70	0.25	2.28		117	70
1748	120.01	0.36	3.06		115	70
1749	119.95	0.49	4.28		114	70
1750	119.59	0.54	4.79		113	70
1751	119.90	0.53	4.82		111	70
1752	120.23	0.5	4.67		111	70
1753	119.87	0.47	4.43		110	70
1754	120.63	0.44	4.2		109	70
1755	119.84	0.41	3.98		108	70
1756	119.87	0.38	3.78		109	70
1757	120.34	0.37	3.61		107	70
1758	120.08	0.35	3.46		107	70
1759	119.99	0.33	3.31		107	70
1760	119.64	0.32	3.16		107	70
1761	119.91	0.31	3.05		107	70
1762	120.19	0.29	2.93		105	70
1763	120.52	0.28	2.82		106	70
1764	119.80	0.27	2.72		105	70
1765	120.44	0.26	2.64		104	70
1766	119.47	0.26	2.57		105	70
1767	119.81	0.25	2.53		104	70
1768	119.32	0.25	2.49		103	70
1769	120.20	0.25	2.45		103	70
1770	119.90	0.24	2.41		103	70
1771	120.15	0.24	2.35		103	70
1772	120.10	0.24	2.32		103	70
1773	120.46	0.23	2.29		103	70
1774	120.55	0.23	2.24		125	70
1775	120.71	0.22	2.19		123	70
1776	120.04	0.22	2.15		119	70
1777	119.74	0.22	2.15		116	70
1778	120.45	0.24	2.28		113	70
1779	119.92	0.35	3.09		111	70
1780	119.96	0.44	4.11		110	70
1781	119.05	0.45	4.41		109	70
1782	118.86	0.42	4.35		111	70
1783	117.64	0.39	4.16		149	70
1784	116.89	0.36	3.93		170	70
1785	116.39	0.33	3.7		187	70

1786	114.56	0.31	3.51		207	70
1787	113.69	0.39	3.77		231	70
1788	111.67	0.79	5.02		246	70
1789	111.42	1.13	6.27		256	70
1790	110.42	1.02	7.52		262	70
1791	109.43	0.62	9.78		267	70
1792	108.60	0.26	12.86		270	70
1793	107.46	0.13	14.68		273	70
1794	106.52	0.09	15.5		275	70
1795	104.86	0.07	15.89		278	70
1796	104.17	0.07	16.17		281	70
1797	103.25	0.07	16.33		284	70
1798	102.00	0.08	16.45		287	70
1799	100.64	0.08	16.58		290	70
1800	99.42	0.08	16.72		293	70
1801	97.78	0.08	16.9		296	70
1802	97.03	0.09	17.08		295	70
1803	95.69	0.1	17.28		296	70
1804	94.96	0.1	17.47		299	70
1805	94.77	0.11	17.61		290	70
1806	94.59	0.11	17.69		258	70
1807	94.05	0.11	17.61		241	70
1808	94.03	0.1	17.56		230	70
1809	93.44	0.1	17.35		223	70
1810	93.37	0.08	16.35		219	70
1811	92.90	0.05	15.29		214	70
1812	93.26	0.03	14.73		210	70
1813	92.62	0.02	14.11		207	70
1814	92.91	0.09	13.68		204	70
1815	92.46	0.42	15.13		202	70
1816	92.46	0.65	16.95		201	70
1817	92.60	0.54	17.48		200	70
1818	92.08	0.41	17.52		198	70
1819	92.18	0.3	17.16		195	70
1820	92.62	0.39	16.7		193	70
1821	92.51	1.21	17.19		190	70
1822	92.47	2.62	18.58		188	70
1823	91.87	4.2	20.4		186	70
1824	92.12	5.2	20.78		184	70
1825	92.13	5.2	20.78		182	70
1826	92.39	5.2	20.78		179	70
1827	92.28	5.2	20.78		178	70

1828	91.87	5.2	20.78		176	70
1829	92.18	5.2	20.78		174	70
1830	91.96	5.2	20.78		172	70
1831	91.81	5.2	20.78		170	70
1832	91.66	5.2	20.78		169	70
1833	92.06	5.2	20.78		168	70
1834	91.61	5.2	20.78		167	70
1835	92.16	5.2	20.78		165	70
1836	91.60	5.2	20.78		163	70
1837	91.76	5.2	20.78		162	70
1838	92.10	5.2	20.78		161	70
1839	91.65	5.2	20.78		160	70
1840	91.49	5.2	20.78		158	70
1841	92.31	5.2	20.78		157	70
1842	91.75	5.2	20.78		157	70
1843	91.84	5.2	20.44		154	70
1844	92.11	5.2	19.92		157	70
1845	92.21	5.2	19.36		154	70
1846	92.14	5.2	18.71		152	70
1847	91.12	5.2	18		153	70
1848	92.10	5.1	17.35		152	70
1849	91.73	4.9	16.76		150	70
1850	92.43	4.74	16.29		150	70
1851	92.01	4.61	15.9		151	70
1852	91.86	4.51	15.62		147	70
1853	92.12	4.42	15.35		149	70
1854	92.36	4.32	15.08		148	70
1855	91.68	4.21	14.78		145	70
1856	92.43	4.05	14.38		144	70
1857	91.90	3.9	13.98		145	70
1858	92.21	3.75	13.57		143	70
1859	91.91	3.58	13.12		141	70
1860	92.55	3.43	12.7		143	70
1861	92.05	3.32	12.38		140	70
1862	92.13	3.23	12.11		138	70
1863	91.70	3.14	11.86		139	70
1864	92.68	3.04	11.59		140	70
1865	91.88	2.94	11.31		138	70
1866	92.01	2.85	11.07		136	70
1867	92.24	2.77	10.82		136	70
1868	92.22	2.68	10.56		134	70
1869	92.63	2.59	10.31		135	70

1870	92.33	2.49	10.05		133	70
1871	92.03	2.43	9.84		133	70
1872	92.36	2.37	9.65		133	70
1873	92.02	2.31	9.48		133	70
1874	91.71	2.25	9.28		132	70
1875	91.86	2.2	9.13		131	70
1876	91.87	2.16	9.01		156	70
1877	92.11	2.11	8.88		150	70
1878	92.38	2.07	8.74		146	70
1879	91.23	2.01	8.59		142	70
1880	91.97	2.1	8.72		140	70
1881	91.60	2.25	9.19		137	70
1882	91.80	2.16	9.38		137	70
1883	92.50	2.01	9.39		135	70
1884	92.11	1.92	9.36		135	70
1885	91.72	1.84	9.19		133	70
1886	92.05	1.76	8.95		131	70
1887	92.22	1.68	8.65		130	70
1888	91.97	1.61	8.39		129	70
1889	91.70	1.54	8.14		129	70
1890	91.71	1.48	7.86		129	70
1891	91.78	1.42	7.6		126	70
1892	91.49	1.37	7.38		126	70
1893	92.12	1.32	7.16		126	70
1894	91.84	1.27	6.96		126	70
1895	91.65	1.22	6.75		123	70
1896	91.99	1.18	6.56		125	70
1897	92.26	1.15	6.41		123	70
1898	92.18	1.11	6.21		124	70
1899	92.08	1.07	6.01		122	70
1900	91.72	1.03	5.86		122	70
1901	91.91	1	5.72		122	70
1902	92.05	0.97	5.58		121	70
1903	91.87	0.95	5.46		119	70
1904	91.94	0.92	5.32		117	70
1905	91.84	0.89	5.16		120	70
1906	91.99	0.86	5.04		123	70
1907	91.96	0.84	4.94		149	70
1908	91.32	0.82	4.84		141	70
1909	91.92	0.79	4.72		135	70
1910	91.92	0.78	4.65		132	70
1911	91.66	0.84	4.8		130	70

1912	91.50	0.96	5.35		128	70
1913	91.27	1.06	5.95		127	70
1914	92.05	1.08	6.23		125	70
1915	92.03	1.05	6.21		123	70
1916	92.19	1	6.06		122	70
1917	92.22	0.96	5.89		121	70
1918	92.26	0.91	5.69		120	70
1919	92.02	0.86	5.47		119	70
1920	91.73	0.8	5.24		118	70
1921	92.14	0.75	4.98		118	70
1922	91.62	0.7	4.75		117	70
1923	91.66	0.67	4.56		117	70
1924	92.16	0.64	4.39		117	70
1925	91.91	0.61	4.21		116	70
1926	91.87	0.57	4.02		115	70
1927	91.67	0.54	3.82		113	70
1928	91.75	0.51	3.68		113	70
1929	92.03	0.49	3.53		112	70
1930	91.66	0.47	3.4		112	70
1931	91.65	0.45	3.28		112	70
1932	92.09	0.44	3.18		111	70
1933	91.93	0.42	3.08		111	70
1934	91.81	0.41	3		111	70
1935	91.64	0.4	2.92		109	70
1936	91.58	0.39	2.84		110	70
1937	91.54	0.37	2.74		127	70
1938	92.12	0.36	2.66		141	70
1939	91.53	0.34	2.58		133	70
1940	92.02	0.33	2.51		129	70
1941	91.77	0.33	2.48		125	70
1942	91.73	0.4	2.81		123	70
1943	91.60	0.56	3.79		121	70
1944	91.10	0.65	4.46		119	70
1945	91.58	0.66	4.65		118	70
1946	91.36	0.63	4.58		117	70
1947	91.41	0.6	4.4		116	70
1948	91.42	0.56	4.21		115	70
1949	91.42	0.52	4.01		114	70
1950	91.89	0.49	3.83		113	70
1951	91.93	0.46	3.67		113	70
1952	91.82	0.44	3.49		112	70
1953	91.86	0.41	3.33		111	70

1954	91.63	0.39	3.19		112	70
1955	91.71	0.37	3.06		111	70
1956	91.64	0.36	2.94		110	70
1957	91.55	0.34	2.83		110	70
1958	92.08	0.33	2.74		109	70
1959	91.76	0.31	2.65		109	70
1960	91.25	0.3	2.57		109	70
1961	91.05	0.29	2.48		108	70
1962	91.77	0.28	2.42		108	70
1963	91.52	0.27	2.37		107	70
1964	92.00	0.27	2.32		107	70
1965	91.12	0.26	2.26		106	70
1966	91.73	0.25	2.2		107	70
1967	91.64	0.24	2.17		107	70
1968	91.52	0.24	2.13		131	70
1969	91.86	0.23	2.08		137	70
1970	91.45	0.23	2.04		129	70
1971	91.63	0.22	2		124	70
1972	91.35	0.22	1.98		120	70
1973	91.64	0.28	2.38		118	70
1974	91.69	0.45	3.5		116	70
1975	91.59	0.57	4.4		114	70
1976	91.96	0.61	4.72		113	70
1977	91.26	0.59	4.7		113	70
1978	91.70	0.56	4.53		111	70
1979	91.78	0.52	4.32		111	70
1980	91.62	0.49	4.14		110	70
1981	91.43	0.46	3.95		109	70
1982	91.60	0.44	3.75		109	70
1983	91.56	0.41	3.58		107	70
1984	91.46	0.39	3.44		108	70
1985	91.58	0.38	3.3		108	70
1986	91.66	0.36	3.16		107	70
1987	91.47	0.34	3.02		106	70
1988	91.96	0.32	2.9		106	70
1989	91.62	0.31	2.79		106	70
1990	91.46	0.3	2.72		105	70
1991	91.80	0.29	2.65		105	70
1992	91.87	0.28	2.56		106	70
1993	91.57	0.27	2.49		105	70
1994	91.87	0.26	2.41		104	70
1995	91.53	0.25	2.35		104	70

1996	91.98	0.24	2.29		104	70
1997	91.52	0.24	2.24		104	70
1998	91.28	0.23	2.17		104	70
1999	91.91	0.22	2.12		127	70
2000	91.61	0.22	2.08		133	70
2001	91.41	0.22	2.04		124	70
2002	91.69	0.21	2		119	70
2003	91.64	0.21	2.01		116	70
2004	91.62	0.28	2.51		113	70
2005	91.27	0.42	3.53		112	70
2006	91.73	0.49	4.24		111	70
2007	91.55	0.5	4.41		110	70
2008	91.31	0.49	4.36		109	70
2009	91.40	0.47	4.2		108	70
2010	91.42	0.44	4.01		108	70
2011	91.54	0.41	3.79		107	70
2012	91.51	0.38	3.58		107	70
2013	91.66	0.36	3.39		106	70
2014	91.54	0.34	3.23		106	70
2015	91.60	0.33	3.09		107	70
2016	91.58	0.31	2.96		106	70
2017	91.75	0.3	2.84		105	70
2018	91.71	0.28	2.73		105	70
2019	91.63	0.27	2.65		105	70
2020	91.83	0.27	2.57		104	70
2021	91.47	0.25	2.46		104	70
2022	91.73	0.24	2.38		104	70
2023	91.46	0.24	2.31		104	70
2024	91.14	0.23	2.24		104	70
2025	92.23	0.22	2.18		104	70
2026	91.81	0.22	2.13		103	70
2027	91.66	0.21	2.08		103	70
2028	91.78	0.21	2.03		103	70
2029	91.47	0.21	1.98		102	70
2030	91.60	0.2	1.95		126	70
2031	91.46	0.2	1.93		129	70
2032	91.12	0.2	1.91		121	70
2033	91.48	0.2	1.88		116	70
2034	91.28	0.2	1.91		112	70
2035	91.37	0.3	2.59		111	70
2036	91.63	0.4	3.6		109	69
2037	91.52	0.43	4.06		108	70

2038	91.29	0.41	4.08		106	70
2039	91.54	0.38	3.93		106	70
2040	91.85	0.36	3.76		106	70
2041	91.10	0.34	3.58		106	70
2042	90.96	0.32	3.44		105	70
2043	90.70	0.3	3.29		104	70
2044	90.17	0.28	3.13		124	70
2045	89.75	0.27	2.98		157	70
2046	88.50	0.25	2.84		173	70
2047	87.90	0.24	2.71		187	70
2048	85.84	0.23	2.64		207	70
2049	85.33	0.34	3.11		226	69
2050	84.70	0.71	4.33		241	70
2051	83.66	1.08	5.3		252	70
2052	82.96	1.33	6.62		257	70
2053	81.98	1.18	9.35		261	70
2054	80.92	0.62	12.58		265	70
2055	79.87	0.26	14.21		268	69
2056	78.83	0.13	14.89		273	69
2057	78.24	0.09	15.18		276	70
2058	77.34	0.08	15.36		278	70
2059	75.71	0.08	15.56		280	70
2060	74.65	0.09	15.85		283	70
2061	73.57	0.09	16.11		286	70
2062	71.69	0.09	16.26		292	70
2063	70.84	0.08	16.37		294	71
2064	69.69	0.09	16.51		294	71
2065	68.93	0.09	16.7		296	71
2066	67.28	0.1	17.08		297	72
2067	67.19	0.13	17.63		298	72
2068	66.65	0.13	17.79		279	72
2069	66.60	0.11	17.74		253	72
2070	66.03	0.11	17.76		239	73
2071	66.02	0.1	17.77		229	73
2072	65.27	0.1	17.31		223	73
2073	65.50	0.07	16.22		219	73
2074	65.48	0.04	15.38		215	73
2075	65.22	0.03	15		212	74
2076	65.07	0.03	14.44		209	74
2077	64.81	0.25	14.57		206	74
2078	64.73	0.92	16.4		204	74
2079	65.14	1.29	17.89		203	75

2080	64.61	1.36	18.38		201	75
2081	64.53	1.35	18.4		199	75
2082	64.33	1.23	18.17		197	75
2083	64.28	1.41	18.15		195	75
2084	64.52	2.5	19.23		192	75
2085	64.20	4.2	20.78		190	76
2086	64.07	5.2	20.78		188	76
2087	64.53	5.2	20.78		187	76
2088	64.50	5.2	20.78		185	76
2089	63.21	5.2	20.78		183	76
2090	63.56	5.2	20.78		181	76
2091	63.42	5.2	20.78		180	77
2092	63.85	5.2	20.78		178	77
2093	63.44	5.2	20.78		177	77
2094	63.79	5.2	20.78		174	77
2095	63.35	5.2	20.78		174	77
2096	62.58	5.2	20.78		174	77
2097	64.15	5.2	20.78		173	77
2098	62.44	5.2	20.78		172	77
2099	63.06	5.2	20.78		170	77
2100	63.51	5.2	20.78		169	78
2101	63.12	5.2	20.78		170	78
2102	62.87	5.2	20.78		168	78
2103	62.94	5.2	20.78		168	78
2104	63.19	5.2	20.78		166	78
2105	63.34	5.2	20.78		165	78
2106	62.95	5.2	20.78		167	78
2107	62.97	5.2	20.78		165	78
2108	62.52	5.2	20.78		165	79
2109	62.94	5.2	20.78		161	79
2110	63.32	5.2	20.78		164	79
2111	63.47	5.2	20.78		162	79
2112	63.02	5.2	20.78		161	79
2113	63.11	5.2	20.78		160	79
2114	61.36	5.2	20.78		158	79
2115	61.18	5.2	20.78		160	79
2116	61.45	5.2	20.78		157	79
2117	61.73	5.2	20.78		155	79
2118	61.95	5.2	20.78		155	79
2119	61.89	5.2	20.78		154	79
2120	61.50	5.2	20.78		156	79
2121	61.49	5.2	20.68		154	79

2122	61.79	5.2	18.89		154	79
2123	61.71	5.2	16.11		152	79
2124	61.68	4.63	14.43		151	79
2125	61.59	4.89	14.57		149	79
2126	62.18	5.2	15.6		152	79
2127	61.55	5.07	14.17		150	79
2128	61.19	2.75	7.74		150	78
2129	61.78	5.2	15.59		148	78
2130	61.50	5.2	15.7		147	78
2131	61.78	5.2	15.27		147	78
2132	61.87	5.2	14.79		146	78
2133	62.00	5.09	14.33		143	77
2134	61.96	4.94	13.96		144	77
2135	62.25	4.83	13.68		145	77
2136	61.50	4.67	13.32		143	76
2137	60.60	4.45	12.83		141	76
2138	61.61	4.26	12.38		162	76
2139	61.18	4.15	12.08		158	75
2140	61.47	4.05	11.84		153	75
2141	61.15	3.9	11.52		149	75
2142	61.13	3.9	11.43		147	75
2143	60.79	3.84	11.51		143	75
2144	61.13	3.32	11.14		143	74
2145	61.02	2.86	10.73		141	74
2146	61.34	2.61	10.51		140	74
2147	60.51	2.45	10.23		137	74
2148	60.85	2.33	9.9		137	74
2149	61.15	2.21	9.53		136	74
2150	60.58	2.1	9.17		134	74
2151	60.65	1.98	8.77		134	74
2152	61.10	1.89	8.38		133	73
2153	60.85	1.8	8.03		131	73
2154	61.52	1.71	7.7		130	73
2155	60.62	1.62	7.38		131	73
2156	61.20	1.56	7.13		129	73
2157	61.46	1.5	6.91		128	73
2158	61.12	1.46	6.73		128	73
2159	61.54	1.42	6.56		129	73
2160	61.07	1.38	6.4		128	73
2161	61.25	1.34	6.23		126	72
2162	61.22	1.31	6.11		123	72
2163	61.55	1.28	5.97		125	72

2164	61.10	1.24	5.84	124	72
2165	61.73	1.2	5.69	124	72
2166	61.15	1.16	5.54	123	72
2167	60.85	1.13	5.41	122	71
2168	61.53	1.1	5.29	122	71
2169	61.02	1.08	5.18	145	71
2170	61.01	1.05	5.09	148	71
2171	61.14	1.03	5	141	71
2172	61.21	1	4.91	136	71
2173	60.64	1.04	4.97	133	71
2174	60.79	1.16	5.54	131	72
2175	61.02	1.2	6.16	128	71
2176	60.44	1.17	6.47	127	72
2177	60.68	1.11	6.44	126	72
2178	60.66	1.05	6.26	124	72
2179	61.25	0.99	6.06	123	72
2180	60.60	0.94	5.84	121	72
2181	60.75	0.89	5.62	121	72
2182	60.98	0.84	5.37	121	72
2183	60.63	0.79	5.11	120	72
2184	61.07	0.74	4.87	119	72
2185	61.41	0.69	4.61	117	72
2186	60.67	0.65	4.37	116	72
2187	60.55	0.61	4.16	116	72
2188	61.15	0.57	3.96	117	72
2189	60.69	0.53	3.74	115	72
2190	61.24	0.5	3.53	115	72
2191	61.01	0.47	3.37	115	72
2192	61.03	0.45	3.22	114	72
2193	61.13	0.43	3.09	114	72
2194	60.77	0.41	2.93	113	72
2195	60.90	0.39	2.82	113	72
2196	60.98	0.39	2.76	112	72
2197	60.96	0.38	2.69	112	72
2198	60.72	0.37	2.62	112	72
2199	61.00	0.36	2.56	111	72
2200	60.76	0.35	2.51	139	72
2201	60.57	0.35	2.46	140	72
2202	61.23	0.34	2.42	132	72
2203	60.25	0.33	2.39	127	72
2204	61.31	0.4	2.67	123	72
2205	60.68	0.59	3.77	122	72

2206	61.13	0.69	4.65	120	72
2207	60.61	0.68	4.93	118	72
2208	60.67	0.65	4.88	117	72
2209	61.67	0.61	4.72	117	72
2210	60.89	0.57	4.53	116	72
2211	60.89	0.54	4.34	116	72
2212	60.78	0.5	4.16	114	72
2213	61.21	0.48	3.97	112	72
2214	60.52	0.45	3.79	112	72
2215	60.99	0.43	3.62	113	72
2216	61.38	0.4	3.45	112	73
2217	61.66	0.38	3.29	111	73
2218	60.96	0.36	3.14	111	72
2219	61.45	0.34	3.01	110	72
2220	60.77	0.33	2.89	110	73
2221	61.46	0.31	2.78	110	73
2222	61.21	0.3	2.67	109	73
2223	61.02	0.28	2.56	108	73
2224	61.50	0.27	2.46	108	72
2225	60.88	0.26	2.39	107	72
2226	61.70	0.25	2.3	108	72
2227	61.20	0.24	2.22	107	72
2228	61.42	0.23	2.15	107	72
2229	61.42	0.23	2.09	107	72
2230	61.43	0.22	2.03	106	72
2231	61.24	0.22	1.99	135	73
2232	60.84	0.21	1.95	135	72
2233	60.78	0.21	1.91	127	72
2234	61.24	0.2	1.88	123	73
2235	61.09	0.26	2.26	120	73
2236	61.16	0.45	3.63	117	72
2237	61.11	0.61	4.92	116	73
2238	60.75	0.65	5.42	114	72
2239	61.07	0.63	5.41	114	72
2240	60.83	0.59	5.2	113	73
2241	61.32	0.54	4.94	112	72
2242	61.15	0.51	4.71	112	72
2243	61.10	0.48	4.48	111	72
2244	60.80	0.45	4.25	110	73
2245	61.46	0.42	4.02	109	72
2246	61.17	0.39	3.82	109	72
2247	61.19	0.37	3.62	109	73

2248	61.12	0.35	3.44	109	72
2249	61.17	0.33	3.27	109	72
2250	61.60	0.32	3.13	108	72
2251	61.19	0.3	2.99	108	73
2252	61.20	0.29	2.88	108	72
2253	61.19	0.28	2.78	107	73
2254	61.14	0.27	2.67	107	72
2255	61.57	0.26	2.58	106	73
2256	61.06	0.25	2.5	106	72
2257	61.49	0.24	2.41	107	72
2258	61.68	0.23	2.33	107	72
2259	60.81	0.22	2.25	106	72
2260	61.20	0.22	2.18	105	72
2261	61.18	0.21	2.13	104	72
2262	61.09	0.21	2.1	136	72
2263	61.45	0.21	2.06	131	72
2264	61.17	0.2	2.02	122	72
2265	60.86	0.2	1.99	118	72
2266	61.45	0.27	2.5	116	72
2267	61.58	0.43	3.87	114	72
2268	61.86	0.52	4.8	112	72
2269	62.05	0.53	5.04	111	72
2270	61.16	0.5	4.96	110	72
2271	61.39	0.47	4.76	109	72
2272	61.40	0.44	4.53	108	72
2273	61.40	0.41	4.3	107	72
2274	61.56	0.39	4.06	107	72
2275	60.62	0.36	3.86	107	72
2276	61.48	0.33	3.63	106	72
2277	61.10	0.31	3.41	106	71
2278	61.16	0.29	3.22	107	71
2279	60.73	0.28	3.05	106	71
2280	61.24	0.26	2.91	106	71
2281	61.24	0.25	2.8	105	71
2282	61.88	0.24	2.69	105	71
2283	61.10	0.23	2.59	105	72
2284	61.31	0.22	2.49	106	72
2285	61.64	0.21	2.39	105	72
2286	61.88	0.2	2.29	104	72
2287	61.48	0.19	2.19	104	72
2288	61.40	0.19	2.12	104	72
2289	61.45	0.18	2.04	104	72

2290	60.66	0.18	1.98	103	72
2291	60.86	0.17	1.93	103	72
2292	61.53	0.17	1.89	103	72
2293	61.42	0.17	1.84	139	72
2294	61.40	0.16	1.8	127	72
2295	61.56	0.16	1.76	119	72
2296	61.42	0.16	1.77	115	72
2297	61.36	0.25	2.45	113	72
2298	61.50	0.45	4.1	112	72
2299	60.92	0.56	5	110	72
2300	61.49	0.57	5.21	110	72
2301	61.14	0.55	5.13	108	72
2302	62.09	0.52	4.93	107	72
2303	61.40	0.49	4.73	107	72
2304	60.46	0.46	4.5	106	72
2305	61.48	0.43	4.26	105	72
2306	61.48	0.4	4.03	105	72
2307	61.51	0.37	3.81	105	72
2308	61.04	0.35	3.6	104	72
2309	61.44	0.33	3.42	104	72
2310	61.17	0.31	3.26	105	72
2311	61.04	0.3	3.11	104	72
2312	60.91	0.28	2.96	103	72
2313	61.62	0.27	2.82	103	72
2314	61.36	0.25	2.69	104	72
2315	61.58	0.24	2.58	103	72
2316	61.38	0.23	2.45	103	72
2317	60.58	0.22	2.35	103	72
2318	61.19	0.21	2.26	102	72
2319	60.78	0.2	2.16	103	72
2320	60.64	0.19	2.06	140	72
2321	58.75	0.18	1.97	159	72
2322	59.55	0.17	1.9	171	72
2323	58.15	0.17	1.86	186	72
2324	56.87	0.29	2.69	202	72
2325	56.12	0.55	4.18	216	72
2326	55.95	0.8	4.94	228	72
2327	54.91	0.81	5.64	236	72
2328	53.46	0.68	7.02	243	72
2329	53.12	0.51	9.15	248	72
2330	51.91	0.33	10.97	253	72
2331	51.86	0.2	12.02	257	72

2332	50.27	0.12	12.77	260	72
2333	49.82	0.08	13.46	263	72
2334	49.27	0.05	13.97	266	72
2335	47.56	0.04	14.33	269	72
2336	46.86	0.04	14.62	273	72
2337	45.69	0.05	14.86	277	72
2338	45.00	0.06	15.08	280	72
2339	43.38	0.07	15.32	282	72
2340	43.01	0.08	15.59	285	72
2341	41.50	0.09	15.89	288	72
2342	41.03	0.09	16.15	290	72
2343	40.96	0.1	16.33	292	72
2344	41.23	0.1	16.5	276	72
2345	40.10	0.1	16.64	250	72
2346	39.67	0.1	16.73	235	72
2347	39.93	0.11	16.77	225	72
2348	39.51	0.11	15.97	219	72
2349	39.86	0.08	14.35	217	72
2350	39.49	0.05	13	213	72
2351	39.14	0.03	12.14	210	72
2352	39.42	0.03	11.34	207	72
2353	39.10	0.13	11.41	204	72
2354	39.40	0.3	12.62	202	72
2355	38.65	0.34	13.42	201	72
2356	38.77	0.31	13.58	199	72
2357	39.18	0.27	13.46	197	71
2358	38.72	0.25	13.1	194	71
2359	38.76	0.38	12.82	192	72
2360	38.71	0.98	13.12	189	72
2361	38.68	2.05	14.13	187	72
2362	39.10	3.24	15.41	185	72
2363	38.87	4.32	16.51	182	72
2364	38.94	5.15	17.41	179	72
2365	38.49	5.2	18.07	177	72
2366	38.89	5.2	18.46	175	72
2367	39.08	5.2	18.61	174	72
2368	39.11	5.2	18.55	172	72
2369	38.91	5.2	18.46	170	72
2370	38.86	5.2	18.42	168	72
2371	38.86	5.2	18.37	166	72
2372	39.07	5.2	18.33	165	72
2373	38.72	5.2	18.3	163	72

2374	38.79	5.2	18.13	162	72
2375	38.98	5.2	17.82	160	72
2376	38.94	5.2	17.56	158	72
2377	38.25	5.2	17.27	157	72
2378	38.43	5.2	16.93	155	72
2379	38.48	5.2	16.55	154	72
2380	38.84	5.2	16.17	152	72
2381	39.33	5.2	15.91	152	72
2382	38.71	5.2	15.72	150	72
2383	38.96	5.2	15.45	149	72
2384	38.76	5.13	15.16	147	72
2385	38.86	4.99	14.85	147	72
2386	38.48	4.85	14.51	146	72
2387	38.67	4.73	14.25	145	72
2388	38.14	4.62	13.98	144	72
2389	38.29	4.49	13.71	141	72
2390	38.21	4.4	13.51	141	72
2391	38.20	4.33	13.36	141	72
2392	38.62	4.2	13.08	140	72
2393	38.33	4.03	12.69	138	72
2394	38.63	3.87	12.28	138	72
2395	38.48	3.73	11.96	136	72
2396	38.68	3.62	11.7	134	72
2397	38.85	3.5	11.46	135	72
2398	38.36	3.39	11.18	133	72
2399	39.11	3.25	10.84	132	72
2400	38.58	3.11	10.49	132	72
2401	38.29	2.99	10.2	130	72
2402	38.99	2.89	9.95	130	72
2403	39.01	2.78	9.66	130	72
2404	38.83	2.68	9.42	129	72
2405	38.92	2.59	9.19	129	72
2406	38.96	2.48	8.93	130	72
2407	38.83	2.39	8.69	127	72
2408	38.67	2.31	8.46	125	72
2409	38.73	2.24	8.25	126	72
2410	38.99	2.18	8.09	125	72
2411	39.22	2.12	7.94	126	72
2412	38.91	2.04	7.73	124	72
2413	39.07	1.96	7.52	124	72
2414	39.15	1.9	7.35	145	72
2415	38.84	1.86	7.24	159	72

2416	38.81	1.83	7.16	148	72
2417	39.09	1.81	7.11	141	72
2418	38.75	1.9	7.26	137	72
2419	38.79	2.13	7.77	134	72
2420	38.72	2.13	8.01	131	72
2421	38.47	1.97	7.94	129	72
2422	38.48	1.82	7.72	128	72
2423	38.76	1.68	7.44	127	72
2424	38.56	1.54	7.07	126	72
2425	38.60	1.41	6.65	125	72
2426	38.86	1.3	6.25	123	72
2427	38.69	1.2	5.86	122	72
2428	38.87	1.11	5.49	121	72
2429	38.80	1.02	5.14	121	72
2430	38.54	0.94	4.8	120	72
2431	39.07	0.87	4.5	120	72
2432	38.84	0.81	4.24	120	72
2433	38.50	0.75	3.97	119	72
2434	38.94	0.7	3.73	118	72
2435	38.79	0.66	3.54	118	72
2436	39.02	0.63	3.4	117	72
2437	38.76	0.61	3.29	116	72
2438	38.65	0.61	3.25	117	72
2439	38.98	0.61	3.24	116	72
2440	38.70	0.62	3.29	116	72
2441	39.01	0.63	3.37	115	72
2442	38.82	0.65	3.47	115	72
2443	38.70	0.68	3.6	115	72
2444	38.85	0.7	3.71	116	72
2445	38.77	0.71	3.81	136	72
2446	38.78	0.73	3.91	149	72
2447	39.28	0.74	4	138	72
2448	38.75	0.75	4.07	131	72
2449	39.02	0.8	4.27	127	72
2450	38.72	0.87	4.62	123	72
2451	38.79	0.85	4.82	122	72
2452	38.73	0.79	4.79	121	72
2453	39.19	0.72	4.62	121	72
2454	39.18	0.66	4.36	120	72
2455	39.03	0.61	4.11	118	72
2456	38.87	0.56	3.9	117	72
2457	38.77	0.53	3.7	117	72

2458	39.20	0.49	3.52	117	72
2459	38.85	0.46	3.34	116	72
2460	38.93	0.43	3.15	115	72
2461	39.05	0.41	3	115	72
2462	38.92	0.39	2.87	114	72
2463	38.96	0.37	2.74	114	72
2464	39.26	0.35	2.61	113	72
2465	39.07	0.33	2.5	113	72
2466	39.25	0.31	2.41	112	72
2467	38.89	0.3	2.32	112	72
2468	39.02	0.29	2.24	112	72
2469	38.90	0.28	2.18	111	72
2470	39.17	0.27	2.12	111	72
2471	39.08	0.26	2.06	112	72
2472	39.12	0.25	2.01	111	72
2473	38.95	0.24	1.97	110	72
2474	38.76	0.24	1.93	110	72
2475	39.26	0.23	1.91	110	72
2476	39.25	0.23	1.88	134	72
2477	39.17	0.23	1.86	140	72
2478	39.08	0.22	1.84	130	72
2479	38.90	0.22	1.84	124	72
2480	38.73	0.28	2.17	121	72
2481	39.11	0.43	3.25	118	72
2482	39.24	0.55	4.33	117	72
2483	39.24	0.59	4.77	117	72
2484	39.22	0.57	4.8	115	72
2485	39.22	0.53	4.61	114	72
2486	39.09	0.49	4.38	114	72
2487	39.00	0.46	4.17	113	72
2488	38.81	0.43	3.97	112	72
2489	38.90	0.4	3.77	112	72
2490	38.90	0.38	3.57	111	72
2491	38.96	0.36	3.4	111	72
2492	39.00	0.34	3.24	111	72
2493	38.93	0.32	3.08	110	72
2494	39.10	0.3	2.94	109	72
2495	39.29	0.28	2.81	109	72
2496	39.25	0.27	2.69	109	72
2497	39.24	0.26	2.58	109	72
2498	39.28	0.24	2.48	109	72
2499	38.76	0.23	2.39	110	71

2500	39.14	0.22	2.3	108	71
2501	39.20	0.22	2.23	107	71
2502	39.10	0.21	2.15	107	71
2503	39.21	0.2	2.09	107	71
2504	39.15	0.2	2.04	107	72
2505	39.15	0.19	1.97	107	72
2506	39.16	0.18	1.91	107	71
2507	39.02	0.18	1.86	134	71
2508	39.15	0.18	1.83	135	71
2509	39.30	0.17	1.8	126	71
2510	39.24	0.17	1.78	120	71
2511	38.90	0.23	2.23	117	71
2512	39.02	0.37	3.42	114	71
2513	38.68	0.47	4.35	113	71
2514	39.01	0.5	4.66	113	71
2515	39.16	0.49	4.63	112	71
2516	39.02	0.46	4.45	111	71
2517	39.15	0.43	4.22	110	71
2518	39.12	0.4	3.99	110	71
2519	39.72	0.37	3.77	109	71
2520	39.61	0.35	3.56	108	71
2521	38.72	0.33	3.37	108	71
2522	38.59	0.31	3.2	108	71
2523	38.88	0.29	3.05	108	71
2524	38.88	0.27	2.91	108	71
2525	39.19	0.26	2.78	107	71
2526	39.01	0.24	2.65	108	71
2527	39.16	0.23	2.52	107	71
2528	39.25	0.22	2.41	106	71
2529	39.21	0.21	2.3	107	71
2530	39.39	0.2	2.21	106	71
2531	39.11	0.19	2.12	106	71
2532	39.13	0.18	2.02	107	71
2533	39.30	0.17	1.94	106	71
2534	39.16	0.17	1.87	106	71
2535	38.94	0.16	1.8	105	71
2536	38.75	0.16	1.74	104	71
2537	38.95	0.15	1.68	105	71
2538	39.22	0.15	1.62	135	71
2539	38.68	0.14	1.57	131	71
2540	38.93	0.14	1.52	122	71
2541	38.93	0.13	1.49	117	71

2542	39.20	0.2	2.06	114	71
2543	38.83	0.35	3.53	112	71
2544	39.09	0.43	4.5	110	71
2545	39.22	0.45	4.82	110	71
2546	38.85	0.43	4.8	109	71
2547	39.25	0.41	4.65	108	71
2548	39.01	0.38	4.45	107	71
2549	38.84	0.35	4.23	108	71
2550	38.95	0.33	4.01	108	71
2551	39.24	0.31	3.8	108	71
2552	39.20	0.29	3.6	107	71
2553	39.23	0.27	3.42	107	71
2554	39.07	0.26	3.26	106	71
2555	39.11	0.24	3.09	106	71
2556	39.06	0.23	2.93	106	71
2557	39.20	0.22	2.77	105	71
2558	39.31	0.2	2.61	105	71
2559	39.05	0.19	2.48	104	71
2560	38.66	0.18	2.37	104	71
2561	38.99	0.17	2.24	104	71
2562	39.23	0.16	2.13	105	71
2563	38.70	0.16	2.02	105	71
2564	39.07	0.15	1.92	105	71
2565	38.88	0.14	1.83	105	71
2566	39.03	0.14	1.75	104	71
2567	38.74	0.13	1.68	104	71
2568	39.30	0.12	1.59	103	71
2569	39.17	0.12	1.52	128	71
2570	38.85	0.11	1.46	122	71
2571	39.07	0.11	1.38	116	71
2572	39.08	0.11	1.36	112	71
2573	38.83	0.2	2.09	110	71
2574	38.33	0.4	3.94	108	71
2575	37.74	0.52	5.25	144	71
2576	37.21	0.54	5.71	163	71
2577	36.50	0.52	5.73	177	71
2578	35.61	0.5	5.61	191	71
2579	34.99	0.57	5.72	203	71
2580	34.27	0.83	5.81	215	71
2581	33.55	1.06	5.9	228	71
2582	32.80	1.06	6.54	238	71
2583	31.89	0.92	7.77	246	71

2584	31.25	0.72	9.22	253	71
2585	30.23	0.51	10.55	258	71
2586	29.41	0.32	11.76	263	71
2587	28.78	0.18	12.83	267	71
2588	27.59	0.1	13.64	269	71
2589	26.71	0.07	14.23	271	71
2590	26.16	0.06	14.65	273	71
2591	25.62	0.06	14.97	275	71
2592	24.34	0.06	15.14	277	71
2593	23.61	0.07	15.21	279	71
2594	22.46	0.08	15.26	281	71
2595	21.25	0.09	15.31	283	71
2596	20.64	0.09	15.37	285	71
2597	19.98	0.09	15.47	286	71
2598	19.90	0.1	15.61	288	71
2599	19.12	0.1	15.75	289	71
2600	19.62	0.1	15.85	266	71
2601	19.11	0.1	15.89	244	71
2602	19.27	0.1	15.93	231	71
2603	19.21	0.09	15.85	222	71
2604	18.79	0.09	14.62	218	71
2605	18.66	0.07	12.46	215	71
2606	18.56	0.05	10.69	211	71
2607	18.92	0.05	9.4	209	71
2608	18.72	0.07	8.48	206	71
2609	18.60	0.09	8.32	203	71
2610	18.54	0.1	8.71	202	71
2611	18.60	0.11	8.91	200	71
2612	18.38	0.12	8.83	198	71
2613	18.61	0.13	8.54	196	71
2614	18.62	0.13	8.1	194	71
2615	18.33	0.14	7.6	191	71
2616	18.53	0.19	7.26	188	71
2617	18.74	0.35	7.26	185	71
2618	18.52	0.6	7.53	183	71
2619	19.04	0.86	7.86	181	71
2620	18.60	1.07	8.08	178	71
2621	18.62	1.28	8.41	176	71
2622	18.98	1.49	8.83	175	71
2623	18.52	1.65	9.1	173	71
2624	18.69	1.75	9.28	170	71
2625	19.00	1.83	9.44	168	71

2626	18.60	1.89	9.58	166	71
2627	18.58	1.93	9.66	164	71
2628	18.56	1.92	9.62	162	71
2629	18.52	1.89	9.48	161	71
2630	18.58	1.86	9.33	159	71
2631	18.94	1.82	9.17	158	71
2632	18.43	1.79	9.04	156	71
2633	18.66	1.75	8.9	154	71
2634	18.57	1.72	8.78	152	71
2635	18.60	1.68	8.63	151	71
2636	18.88	1.61	8.36	150	71
2637	18.28	1.55	8.12	148	71
2638	18.75	1.5	7.92	147	71
2639	18.67	1.46	7.76	146	71
2640	18.50	1.42	7.63	144	71
2641	18.70	1.38	7.45	143	71
2642	18.78	1.33	7.26	142	71
2643	18.97	1.31	7.19	140	71
2644	18.27	1.28	7.08	139	71
2645	18.63	1.24	6.92	139	71
2646	18.81	1.23	6.87	138	71
2647	19.06	1.23	6.86	137	71
2648	18.62	1.21	6.81	136	71
2649	18.96	1.2	6.76	135	71
2650	18.53	1.18	6.69	134	71
2651	18.88	1.19	6.71	133	71
2652	18.88	1.19	6.72	133	71
2653	18.64	1.18	6.67	132	71
2654	18.82	1.18	6.68	131	71
2655	18.89	1.18	6.67	130	71
2656	19.49	1.17	6.65	129	71
2657	19.06	1.18	6.67	128	71
2658	18.78	1.19	6.71	128	71
2659	18.90	1.21	6.76	127	71
2660	19.05	1.23	6.84	127	71
2661	18.90	1.25	6.92	126	71
2662	18.87	1.27	6.99	125	71
2663	18.93	1.3	7.06	125	71
2664	19.12	1.32	7.13	126	71
2665	19.21	1.35	7.2	124	71
2666	18.91	1.37	7.26	123	71
2667	19.63	1.4	7.33	123	71

2668	19.33	1.45	7.5	122	71
2669	19.00	1.5	7.64	122	71
2670	18.88	1.53	7.74	150	71
2671	19.10	1.57	7.84	158	71
2672	18.95	1.61	7.95	145	71
2673	18.91	1.65	8.06	138	71
2674	19.23	1.76	8.43	133	71
2675	19.03	1.8	8.63	131	71
2676	18.97	1.68	8.33	128	71
2677	19.39	1.52	7.84	127	71
2678	19.01	1.38	7.35	126	71
2679	18.93	1.26	6.91	124	71
2680	18.99	1.16	6.49	123	71
2681	18.74	1.07	6.09	123	71
2682	18.91	0.98	5.73	121	71
2683	19.29	0.91	5.38	121	71
2684	19.20	0.84	5.08	121	71
2685	18.93	0.79	4.83	121	71
2686	18.88	0.74	4.65	121	71
2687	19.35	0.72	4.52	120	71
2688	19.00	0.71	4.5	119	71
2689	19.36	0.71	4.59	120	71
2690	19.19	0.72	4.7	119	71
2691	19.44	0.74	4.85	119	71
2692	19.24	0.76	4.99	118	71
2693	19.33	0.77	5.13	118	71
2694	19.12	0.78	5.24	117	71
2695	18.94	0.79	5.35	117	71
2696	19.65	0.79	5.42	115	71
2697	19.54	0.79	5.5	116	71
2698	19.26	0.79	5.55	114	71
2699	18.93	0.79	5.59	114	71
2700	19.03	0.79	5.62	114	71
2701	19.03	0.79	5.66	146	71
2702	18.52	0.78	5.66	148	70
2703	19.05	0.77	5.64	136	70
2704	18.95	0.77	5.64	129	70
2705	18.97	0.78	5.81	125	70
2706	18.99	0.79	6.01	124	71
2707	19.11	0.78	5.99	122	70
2708	19.44	0.74	5.79	121	71
2709	19.41	0.7	5.5	120	70

2710	19.11	0.65	5.17	119	70
2711	19.15	0.6	4.85	118	71
2712	19.41	0.55	4.57	116	71
2713	19.23	0.51	4.3	116	71
2714	19.44	0.47	4.06	115	71
2715	19.06	0.44	3.84	116	71
2716	19.13	0.41	3.62	116	71
2717	18.88	0.38	3.4	115	71
2718	19.24	0.36	3.21	114	71
2719	19.23	0.33	3.03	114	71
2720	19.21	0.32	2.88	115	71
2721	18.90	0.3	2.74	113	70
2722	19.22	0.28	2.61	114	71
2723	19.19	0.26	2.48	113	71
2724	18.91	0.24	2.35	112	71
2725	19.06	0.23	2.25	112	71
2726	19.21	0.22	2.15	112	71
2727	19.13	0.21	2.04	111	71
2728	19.85	0.19	1.94	112	71
2729	19.15	0.18	1.85	111	71
2730	19.06	0.18	1.78	111	71
2731	19.40	0.17	1.73	110	71
2732	18.96	0.16	1.68	145	71
2733	19.19	0.16	1.63	140	71
2734	19.37	0.15	1.58	130	71
2735	19.78	0.15	1.57	124	71
2736	19.37	0.23	2.28	121	71
2737	19.43	0.41	3.79	120	71
2738	19.32	0.53	4.71	118	71
2739	18.82	0.56	4.94	116	71
2740	19.23	0.54	4.84	114	71
2741	18.98	0.5	4.62	114	71
2742	19.30	0.46	4.38	114	71
2743	19.24	0.43	4.12	113	71
2744	19.33	0.39	3.86	113	71
2745	18.71	0.36	3.62	112	71
2746	19.08	0.34	3.41	112	71
2747	19.10	0.31	3.2	111	71
2748	19.64	0.29	3.01	110	71
2749	19.42	0.27	2.85	111	71
2750	19.19	0.25	2.71	111	71
2751	19.53	0.23	2.56	110	71

2752	19.42	0.22	2.43	110	71
2753	19.23	0.21	2.32	110	71
2754	19.34	0.2	2.19	109	71
2755	19.57	0.18	2.08	109	71
2756	19.43	0.17	1.96	109	71
2757	19.44	0.16	1.86	110	71
2758	19.36	0.15	1.78	109	71
2759	19.36	0.14	1.69	110	71
2760	19.29	0.14	1.62	109	71
2761	19.68	0.13	1.55	109	71
2762	19.43	0.12	1.49	108	71
2763	19.07	0.12	1.42	144	71
2764	19.35	0.11	1.36	135	71
2765	19.34	0.11	1.31	126	71
2766	19.34	0.11	1.31	121	71
2767	19.45	0.19	2.05	118	71
2768	19.29	0.35	3.78	115	71
2769	19.38	0.45	4.85	114	71
2770	19.19	0.47	5.16	113	71
2771	18.94	0.46	5.09	113	71
2772	19.00	0.43	4.88	113	71
2773	19.01	0.4	4.63	112	71
2774	19.18	0.37	4.38	112	71
2775	19.51	0.35	4.15	111	71
2776	19.37	0.32	3.93	111	71
2777	19.35	0.3	3.72	110	71
2778	19.72	0.28	3.53	109	71
2779	19.37	0.26	3.33	109	71
2780	19.40	0.25	3.15	110	71
2781	19.19	0.23	2.98	109	71
2782	19.32	0.22	2.81	109	71
2783	19.80	0.2	2.65	109	71
2784	19.42	0.19	2.52	109	71
2785	19.53	0.18	2.39	108	71
2786	19.22	0.17	2.26	107	71
2787	19.25	0.16	2.13	107	71
2788	19.20	0.15	2.02	108	71
2789	19.39	0.14	1.91	107	71
2790	19.40	0.14	1.82	107	71
2791	19.16	0.13	1.72	107	71
2792	19.04	0.12	1.64	106	71
2793	19.01	0.12	1.56	106	71

2794	19.37	0.11	1.49	145	71
2795	19.50	0.1	1.42	132	71
2796	19.48	0.1	1.35	123	71
2797	18.87	0.1	1.39	119	71
2798	19.39	0.2	2.28	116	71
2799	19.52	0.37	4.04	114	71
2800	19.30	0.44	4.9	112	71
2801	19.26	0.44	5.06	111	71
2802	18.93	0.43	4.96	111	71
2803	18.93	0.4	4.78	111	71
2804	19.27	0.38	4.56	110	71
2805	19.07	0.35	4.33	109	71
2806	19.47	0.33	4.11	109	71
2807	18.90	0.31	3.91	109	71
2808	19.19	0.29	3.71	108	71
2809	19.37	0.27	3.52	107	71
2810	19.03	0.25	3.34	107	71
2811	19.17	0.24	3.16	107	71
2812	19.08	0.22	2.98	107	71
2813	19.46	0.21	2.81	106	71
2814	19.56	0.2	2.66	107	71
2815	19.53	0.19	2.5	107	71
2816	19.01	0.18	2.37	107	71
2817	19.38	0.17	2.25	106	71
2818	19.19	0.16	2.14	105	71
2819	19.32	0.15	2.04	107	71
2820	19.44	0.14	1.93	106	71
2821	19.13	0.14	1.83	106	71
2822	19.06	0.13	1.74	105	71
2823	19.40	0.12	1.65	104	71
2824	19.55	0.12	1.58	105	71
2825	19.26	0.11	1.5	139	71
2826	19.07	0.1	1.42	128	71
2827	19.45	0.1	1.34	119	71
2828	19.06	0.11	1.42	115	71
2829	19.36	0.22	2.43	112	71
2830	19.41	0.39	4.3	112	71
2831	19.52	0.44	5.18	111	71
2832	18.54	0.42	5.25	110	71
2833	18.96	0.4	5.11	109	71
2834	19.08	0.38	4.92	108	71
2835	19.10	0.35	4.72	108	71

2836	19.01	0.33	4.51	108	71
2837	19.06	0.31	4.29	107	71
2838	19.28	0.29	4.08	106	71
2839	19.01	0.27	3.86	107	71
2840	19.06	0.25	3.66	106	71
2841	19.09	0.24	3.45	106	71
2842	18.97	0.22	3.24	106	71
2843	18.99	0.21	3.05	106	71
2844	18.96	0.2	2.89	106	71
2845	19.07	0.19	2.74	106	71
2846	19.07	0.18	2.6	105	71
2847	19.55	0.17	2.47	105	71
2848	19.22	0.16	2.36	104	71
2849	18.93	0.15	2.24	103	71
2850	19.29	0.15	2.12	104	71
2851	18.96	0.14	2	103	71
2852	19.49	0.13	1.89	104	71
2853	19.53	0.12	1.79	104	71
2854	18.94	0.11	1.69	104	71
2855	19.29	0.11	1.61	104	71
2856	18.52	0.1	1.53	137	71
2857	18.67	0.1	1.44	130	71
2858	17.58	0.09	1.37	154	71
2859	17.13	0.11	1.46	167	71
2860	16.36	0.22	2.52	181	71
2861	15.96	0.35	4.1	194	71
2862	15.09	0.46	4.58	207	71
2863	14.23	0.72	4.63	219	71
2864	13.68	0.92	5	230	71
2865	12.80	0.9	5.95	239	71
2866	12.31	0.81	7.33	247	71
2867	11.34	0.68	8.89	253	71
2868	10.84	0.49	10.24	259	71
2869	10.04	0.32	11.33	262	71
2870	9.61	0.19	12.31	265	71
2871	9.01	0.11	13.22	267	71
2872	8.47	0.07	13.81	269	71
2873	7.36	0.05	14.2	271	71
2874	6.76	0.05	14.38	272	71
2875	5.79	0.05	14.49	274	71
2876	5.32	0.06	14.6	275	71
2877	3.95	0.08	14.74	277	71

2878	3.50	0.09	14.84	278	71
2879	2.67	0.1	14.88	278	71
2880	2.33	0.1	14.92	280	71
2881	2.43	0.1	14.95	281	71
2882	2.26	0.1	14.97	281	71
2883	2.10	0.1	14.97	252	71
2884	2.42	0.1	14.95	234	71
2885	2.19	0.1	14.95	224	71
2886	1.71	0.1	14.58	216	71
2887	1.67	0.14	12.7	214	71
2888	1.86	0.17	10.25	211	71
2889	1.73	0.21	8.33	208	71
2890	1.80	0.24	7.08	205	71
2891	1.85	0.28	6.34	203	71
2892	1.69	0.28	6.05	200	71
2893	1.37	0.25	6.03	199	71
2894	1.88	0.22	6.01	197	71
2895	1.96	0.2	5.95	194	71
2896	1.68	0.19	5.86	192	71
2897	2.00	0.19	5.65	190	71
2898	1.82	0.18	5.32	187	71
2899	1.77	0.16	4.82	185	71
2900	1.92	0.15	4.31	182	71
2901	1.89	0.15	3.91	180	71
2902	1.73	0.17	3.66	178	71
2903	1.86	0.2	3.58	175	71
2904	1.78	0.27	3.68	173	71
2905	2.13	0.35	3.95	171	71
2906	2.15	0.44	4.26	169	71
2907	1.87	0.51	4.55	167	71
2908	2.26	0.58	4.74	165	71
2909	1.83	0.63	4.87	163	71
2910	2.15	0.7	5.06	161	71
2911	2.14	0.79	5.33	159	71
2912	2.57	0.88	5.62	158	71
2913	2.17	0.95	5.83	157	71
2914	2.20	1.03	6.05	155	71
2915	1.73	1.11	6.28	153	71
2916	2.46	1.18	6.49	152	71
2917	1.63	1.26	6.69	150	71
2918	1.90	1.34	6.92	149	71
2919	1.97	1.43	7.15	148	71

2920	1.81	1.49	7.31	147	71
2921	1.97	1.55	7.42	146	71
2922	2.19	1.6	7.55	144	71
2923	2.37	1.68	7.72	143	71
2924	2.86	1.75	7.92	142	71
2925	2.19	1.81	8.11	141	71
2926	2.69	1.84	8.21	139	71
2927	2.62	1.87	8.29	138	71
2928	2.06	1.9	8.39	138	71
2929	2.23	1.94	8.51	136	71
2930	2.56	1.97	8.63	136	71
2931	2.32	1.99	8.73	135	71
2932	2.43	2	8.76	133	70
2933	2.87	1.98	8.69	132	71
2934	2.22	1.94	8.56	132	71
2935	2.41	1.91	8.41	131	71
2936	2.35	1.89	8.33	131	71
2937	2.38	1.89	8.34	130	70
2938	2.34	1.91	8.41	130	71
2939	2.54	1.91	8.41	130	71
2940	2.62	1.9	8.39	129	70
2941	2.33	1.92	8.45	128	70
2942	2.44	1.95	8.6	126	70
2943	2.71	1.99	8.74	126	70
2944	2.93	1.99	8.78	126	70
2945	2.77	1.98	8.78	125	70
2946	2.61	1.96	8.72	124	70
2947	2.82	1.93	8.62	123	70
2948	3.00	1.92	8.59	123	70
2949	2.80	1.91	8.58	122	70
2950	2.74	1.9	8.56	122	70
2951	2.80	1.86	8.43	122	70
2952	2.91	1.82	8.29	121	70
2953	2.85	1.79	8.19	158	70
2954	2.73	1.78	8.15	148	70
2955	2.94	1.78	8.15	139	70
2956	2.78	1.77	8.15	133	70
2957	2.47	1.79	8.3	130	70
2958	2.67	1.59	7.87	127	70
2959	2.85	1.28	7.04	125	70
2960	2.82	1.05	6.24	124	70
2961	2.76	0.9	5.64	122	70

2962	2.25	0.79	5.17	122	70
2963	2.63	0.71	4.76	122	70
2964	2.40	0.65	4.42	121	70
2965	2.42	0.6	4.12	120	70
2966	2.73	0.55	3.84	119	70
2967	2.74	0.51	3.64	120	70
2968	2.47	0.48	3.45	120	70
2969	2.79	0.46	3.27	119	70
2970	2.84	0.43	3.09	118	70
2971	2.38	0.4	2.94	118	70
2972	3.01	0.38	2.8	116	70
2973	2.31	0.36	2.68	117	70
2974	2.45	0.35	2.59	116	70
2975	2.89	0.33	2.48	116	70
2976	2.78	0.31	2.39	115	70
2977	2.90	0.3	2.32	114	70
2978	2.72	0.29	2.28	114	70
2979	3.06	0.29	2.24	114	70
2980	2.85	0.28	2.21	113	70
2981	3.27	0.27	2.18	113	70
2982	2.58	0.27	2.15	114	70
2983	2.63	0.26	2.12	113	70
2984	2.78	0.26	2.1	153	70
2985	2.79	0.26	2.1	139	70
2986	2.60	0.26	2.11	130	70
2987	3.09	0.27	2.17	125	70
2988	2.76	0.36	2.79	122	70
2989	2.63	0.46	3.83	121	70
2990	2.69	0.44	3.95	119	70
2991	2.79	0.39	3.68	118	70
2992	2.80	0.35	3.41	117	70
2993	2.59	0.32	3.17	116	70
2994	2.93	0.29	2.98	116	70
2995	2.75	0.27	2.84	115	70
2996	2.78	0.26	2.72	114	70
2997	2.73	0.24	2.6	114	70
2998	2.79	0.23	2.5	114	70
2999	2.78	0.22	2.39	113	70
3000	2.84	0.21	2.29	113	70
3001	2.78	0.2	2.19	113	70
3002	2.67	0.19	2.09	112	70
3003	2.90	0.18	1.99	111	70

3004	2.82	0.17	1.9	112	70
3005	2.85	0.16	1.82	111	70
3006	2.88	0.15	1.74	110	70
3007	2.85	0.14	1.66	110	70
3008	2.83	0.14	1.6	110	70
3009	2.56	0.13	1.53	109	70
3010	2.88	0.12	1.47	110	70
3011	2.76	0.12	1.4	109	70
3012	2.78	0.11	1.35	108	70
3013	2.53	0.11	1.31	108	70
3014	2.53	0.1	1.26	108	70
3015	3.40	0.1	1.21	131	70
3016	2.99	0.1	1.17	122	70
3017	3.05	0.09	1.12	117	70
3018	3.01	0.09	1.11	113	70
3019	2.80	0.16	1.73	111	70
3020	3.00	0.45	4.61	111	70
3021	3.24	0.61	6.5	111	70
3022	2.85	0.61	6.78	110	70
3023	3.00	0.57	6.54	109	70
3024	2.98	0.53	6.21	108	70
3025	2.75	0.49	5.9	109	70
3026	3.00	0.45	5.62	108	70
3027	3.15	0.42	5.33	108	70
3028	2.81	0.39	5.03	107	70
3029	2.76	0.37	4.74	107	70
3030	2.77	0.34	4.48	107	70
3031	3.30	0.32	4.25	108	70
3032	3.19	0.3	4.01	107	70
3033	3.27	0.28	3.77	107	70
3034	2.66	0.26	3.57	107	70
3035	2.75	0.24	3.37	107	70
3036	2.53	0.23	3.17	107	70
3037	2.90	0.21	2.98	106	70
3038	2.54	0.2	2.81	106	70
3039	2.83	0.19	2.65	107	70
3040	3.07	0.18	2.5	106	70
3041	2.87	0.16	2.34	106	70
3042	2.73	0.16	2.2	106	70
3043	2.64	0.15	2.09	106	70
3044	2.69	0.14	1.99	105	70
3045	2.83	0.13	1.89	104	70

3046	3.16	0.12	1.78	122	70
3047	2.72	0.12	1.69	115	70
3048	2.79	0.11	1.61	111	70
3049	3.01	0.11	1.55	109	70
3050	3.42	0.18	2.14	108	70
3051	2.58	0.43	4.7	107	70
3052	3.16	0.56	6.25	106	70
3053	3.05	0.56	6.45	106	70
3054	3.37	0.52	6.24	105	70
3055	2.98	0.48	5.93	105	70
3056	2.81	0.45	5.63	104	70
3057	3.15	0.42	5.31	104	70
3058	2.50	0.39	5.02	105	70
3059	3.22	0.36	4.73	105	70
3060	3.11	0.33	4.45	105	70
3061	2.93	0.31	4.2	105	70
3062	2.72	0.29	3.99	105	70
3063	3.16	0.27	3.79	103	70
3064	3.10	0.26	3.57	103	70
3065	2.98	0.24	3.37	104	70
3066	3.06	0.23	3.18	103	70
3067	3.24	0.21	3.02	104	70
3068	3.06	0.2	2.87	103	70
3069	2.95	0.19	2.71	103	70
3070	3.34	0.18	2.57	103	70
3071	3.19	0.17	2.44	102	70
3072	3.03	0.16	2.32	103	70
3073	3.18	0.16	2.2	102	70
3074	3.58	0.15	2.1	102	70
3075	3.00	0.14	1.99	103	70
3076	2.86	0.13	1.9	106	70
3077	3.22	0.13	1.82	130	70
3078	3.15	0.12	1.74	119	70
3079	2.93	0.12	1.66	113	70
3080	3.15	0.11	1.62	110	70
3081	3.15	0.21	2.52	108	70
3082	2.98	0.38	4.42	107	70
3083	2.98	0.39	4.84	107	70
3084	3.04	0.36	4.69	106	70
3085	3.24	0.33	4.45	105	70
3086	3.11	0.31	4.22	105	70
3087	3.00	0.29	4.04	104	70

3088	3.18	0.27	3.86	105	70
3089	3.15	0.25	3.67	106	70
3090	3.79	0.24	3.49	105	70
3091	2.90	0.23	3.35	104	70
3092	2.94	0.21	3.2	103	70
3093	2.92	0.21	3.09	103	70
3094	2.69	0.2	2.99	104	70
3095	2.15	0.19	2.89	132	70
3096	2.23	0.19	2.8	155	70
3097	1.51	0.18	2.7	166	70
3098	0.91	0.17	2.61	176	70
3099	0.31	0.19	2.72	187	70
3100	0.00	0.41	4.07	200	70

Run 3
Proportional Rate verification

Test data was edited by changing recording interval from 1 minute to 10 minutes. This was done to demonstrate maximum data points outside of the 90 to 110 percent proportionate rate specification.

Run: 3

Manufacturer: Central Boiler, Wood Master
Model: Edge 960, CleanFire 900
Tracking No.: 2430
Project No.: 0117WB041E
Test Date: December 14, 2020
Technician: Central Boiler
Beginning Clock Time: 21:13
Recording Interval: 10 min.
Total Sampling Time: 3100 min.

Velocity Traverse Data

	Pt.1	Pt.2	Pt.3	Pt.4	Pt.5	Pt.6	Pt.7	Pt.8	Pt.9	Pt.10	Pt.11	Pt.12	Center	
Initial dP	0.046	0.056	0.060	0.060	0.050	0.044	0.040	0.054	0.060	0.060	0.054	0.048	0.048	"H2O
Initial Temp.	71	71	71	71	71	71	71	71	71	71	71	71	71	

Air Velocity: Initial: <50 Final: <50 V_{strav} 15.13 ft/sec
Scale Audit: Pre: 10.0 Post: 10.0 Induced Draft: 0 V_{scent} 14.48 ft/sec
Pitot Tube Leak Test: Pre: 0 Post: 0 % Smoke Capture: 100 F_p 1.045
Flue Pipe Cleaned Prior to First Test in Series: Date:

PM Control Module: 335, 336
Dilution Tunnel MW(dry): 29.00 lb/lb-mole
Dilution Tunnel MW(wet): 28.78 lb/lb-mole
Dilution Tunnel H2O: 2.00 percent
Dilution Tunnel Static: -0.496 "H2O
Pitot Tube Cp: 0.99

	(1)	(2)	(amb)
Meter Box Y Factor:	1.013	0.997	0.97
Barometric Pressure:	Begin	Middle	End
	30.30	30.22	29.88

Average 30.13 "Hg

Tunnel Velocity: 14.52 ft/sec.
Intial Tunnel Flow: 700.6 scfm
Average Tunnel Flow: 661.1 scfm
Tunnel Area: 0.785 ft2
Post-Test Leak Check (1): 0.000 cfm @ in. Hg
Post-Test Leak Check (2): 0.000 cfm @ in. Hg
Fuel Moisture (dry basis %): #DIV/0!
Total Particulate (1): 0.0
Total Particulate (2): 0.0

Elapsed Time	Particulate Sampling Data																Fuel Weight, lb		Flow, gpm		Temperature Data, oF											Specific Heat of Inlet Water (BTU/lb-°F)	Mass Flow Rate of Inlet Water (lb/min)	Heat Output, Btu
	Gas Meter Cubic Feet (1)	Gas Meter Cubic Feet (2)	Gas Meter Cubic Feet (amb)	Sample Rate, cfm (1)	Sample Rate, cfm (2)	Orifice dH (1)	Orifice dH (2)	Orifice dH (amb)	Meter oF (1)	Meter oF (2)	Meter oF (amb)	Meter Vac. In. Hg. (1)	Meter Vac. In. Hg. (2)	Dilution Tunnel Temp.	Dilution Tunnel dP	Pro. Rate (%) (1)	Pro. Rate (%) (2)	Scale Reading	Weight Change	Load Side Liquid Flow Rate	Boiler Side Liquid Flow Rate (optional)	Thermopile ΔT	Boiler to Heat Exch. Temp.	Heat Exch to Boiler Temp.	Inlet Load Temp.	Outlet Load Temp.	Stack	Filter (1)	Filter (2)	Ambient				
0	0.000	0.000				1.67	1.06		72	72		2.90	1.50	72	0.046																		
10	1.703	1.561		0.17	0.16	1.30	1.04		72	72		2.56	2	92	0.047	106	97		0.00												1.001	0.000	0
20	3.274	3.120		0.16	0.16	1.31	1.00		73	74		2.63	2	109	0.042	105	104		0.00												1.001	0.000	0
30	4.830	4.653		0.16	0.15	1.28	0.99		75	75		2.69	2	90	0.047	96	95		0.00												1.001	0.000	0
40	6.389	6.189		0.16	0.15	1.29	0.99		76	76		2.63	2	73	0.044	98	96		0.00												1.001	0.000	0
50	7.966	7.745		0.16	0.16	1.31	1.03		77	77		2.57	2	73	0.044	99	97		0.00												1.001	0.000	0
60	9.553	9.323		0.16	0.16	1.32	1.05		77	78		2.55	2	72	0.045	98	97		0.00												1.001	0.000	0
70	11.145	10.911		0.16	0.16	1.32	1.05		78	78		2.55	2	71	0.045	98	98		0.00												1.001	0.000	0
80	12.737	12.501		0.16	0.16	1.32	1.04		78	79		2.56	2	71	0.045	98	98		0.00												1.001	0.000	0
90	14.331	14.093		0.16	0.16	1.32	1.05		79	79		2.55	2	72	0.046	97	97		0.00												1.001	0.000	0
100	15.926	15.684		0.16	0.16	1.30	1.04		79	79		2.60	2	82	0.044	100	100		0.00												1.001	0.000	0
110	17.516	17.276		0.16	0.16	1.31	1.04		79	79		2.58	2	71	0.045	98	98		0.00												1.001	0.000	0
120	19.107	18.868		0.16	0.16	1.31	1.05		79	79		2.57	2	71	0.043	100	100		0.00												1.001	0.000	0
130	20.699	20.461		0.16	0.16	1.31	1.05		79	80		2.57	2	71	0.047	96	96		0.00												1.001	0.000	0
140	22.290	22.054		0.16	0.16	1.30	1.05		79	80		2.56	2	71	0.045	98	98		0.00												1.001	0.000	0
150	23.882	23.648		0.16	0.16	1.31	1.05		79	80		2.56	2	71	0.044	99	99		0.00												1.001	0.000	0
160	25.475	25.243		0.16	0.16	1.31	1.05		79	80		2.58	2	71	0.046	97	97		0.00												1.001	0.000	0
170	27.067	26.835		0.16	0.16	1.30	1.05		79	80		2.57	2	71	0.046	97	97		0.00												1.001	0.000	0
180	28.659	28.430		0.16	0.16	1.31	1.05		79	80		2.56	2	71	0.048	95	95		0.00												1.001	0.000	0
190	30.252	30.023		0.16	0.16	1.31	1.05		79	80		2.57	2	71	0.046	97	97		0.00												1.001	0.000	0
200	31.845	31.619		0.16	0.16	1.31	1.05		79	80		2.56	2	71	0.048	95	95		0.00												1.001	0.000	0
210	33.438	33.213		0.16	0.16	1.30	1.05		79	80		2.57	2	70	0.045	98	98		0.00												1.001	0.000	0
220	35.031	34.810		0.16	0.16	1.31	1.04		79	80		2.57	2	70	0.045	98	98		0.00												1.001	0.000	0
230	36.624	36.404		0.16	0.16	1.31	1.05		79	80		2.57	2	71	0.045	98	98		0.00												1.001	0.000	0
240	38.211	37.988		0.16	0.16	1.30	1.04		79	80		2.62	2	105	0.040	107	107		0.00												1.001	0.000	0
250	39.782	39.545		0.16	0.16	1.27	1.00		79	80		2.70	2	112	0.044	101	101		0.00												1.001	0.000	0
260	41.338	41.066		0.16	0.15	1.24	0.95		79	80		2.76	2	81	0.046	95	93		0.00												1.001	0.000	0
270	42.893	42.588		0.16	0.15	1.25	0.97		79	80		2.71	2	72	0.046	95	93		0.00												1.001	0.000	0
280	44.460	44.131		0.16	0.15	1.27	1.00		79	80		2.65	2	72	0.046	95	94		0.00												1.001	0.000	0
290	46.039	45.713		0.16	0.16	1.29	1.04		79	80		2.61	2	71	0.042	100	101		0.00												1.001	0.000	0
300	47.624	47.307		0.16	0.16	1.29	1.05		79	80		2.58	2	71	0.045	97	98		0.00												1.001	0.000	0
310	49.215	48.900		0.16	0.16	1.30	1.05		79	80		2.58	2	71	0.044	99	99		0.00												1.001	0.000	0
320	50.805	50.494		0.16	0.16	1.30	1.05		79	80		2.57	2	71	0.046	97	97		0.00												1.001	0.000	0
330	52.394	52.085		0.16	0.16	1.30	1.05		79	80		2.58	2	71	0.042	101	101		0.00												1.001	0.000	0
340	53.985	53.678		0.16	0.16	1.30	1.04		79	80		2.58	2	71	0.044	99	99		0.00												1.001	0.000	0
350	55.576	55.272		0.16	0.16	1.31	1.05		79	80		2.58	2	71	0.043	100	100		0.00												1.001	0.000	0
360	57.166	56.864		0.16	0.16	1.30	1.04		79	80		2.58	2	71	0.042	101	101		0.00												1.001	0.000	0
370	58.757	58.457		0.16	0.16	1.30	1.05		79	80		2.58	2	70	0.042	101	101		0.00												1.001	0.000	0
380	60.348	60.051		0.16	0.16	1.30	1.05		79	80		2.58	2	71	0.045	98	98		0.00												1.001	0.000	0
390	61.938	61.644		0.16	0.16	1.30	1.04		79	80		2.57	2	71	0.046	97	97		0.00												1.001	0.000	0
400	63.529	63.236		0.16	0.16	1.30	1.04		79	80		2.58	2	71	0.044	99	99		0.00												1.001	0.000	0
410	65.120	64.830		0.16	0.16	1.30	1.04		79	80		2.58	2	78	0.042	102	102		0.00												1.001	0.000	0
420	66.707	66.419		0.16	0.16	1.28	1.02		80	80		2.60	2	93	0.043	102	102		0.00												1.001	0.000	0
430	68.292	68.004		0.16	0.16	1.29	1.03		81	81		2.60	2	89	0.040	105	105		0.00												1.001	0.000	0
440	69.876	69.588		0.16	0.16	1.28	1.03		82	83		2.63	2	90	0.043	101	101		0.00												1.001	0.000	0
450	71.460	71.172		0.16	0.16	1.28	1.03		84	84		2.65	2	92	0.045	98	99		0.00												1.001	0.000	0
460	73.043	72.755		0.16	0.16	1.28	1.03		85	86		2.72	2	93	0.043	100	101		0.00												1.001	0.000	0
470	74.629	74.339		0.16	0.16	1.27	1.03		86	87		2.76	2	88	0.048	95	95		0.00												1.001	0.000	0
480	76.214	75.925		0.16	0.16	1.28	1.03		88	88		2.82	2	85	0.043	99	100		0.00												1.001	0.000	0
490	77.803	77.516		0.16	0.16	1.28	1.04		88	89		2.83	2	77	0.042	100	100		0.00												1.001	0.000	0
500	79.393	79.104		0.16	0.16	1.29	1.03		88	88		2.87	2	105	0.041	104	104		0.00												1.001	0.000	0
510	80.975	80.675		0.16	0.16	1.26	1.00		87	87		2.94	2	118	0.040	106	106		0.00												1.001	0.000	0
520	82.543	82.221		0.16	0.15	1.24	0.98		86	86		2.95	2	86	0.044	98	96		0.00												1.001	0.000	0

Elapsed Time	Particulate Sampling Data																	Fuel Weight, lb		Flow, gpm		Temperature Data, oF														
	Gas Meter Cubic Feet (1)	Gas Meter Cubic Feet (2)	Gas Meter Cubic Feet (amb)	Sample Rate, cfm (1)	Sample Rate, cfm (2)	Orifice dH (1)	Orifice dH (2)	Orifice dH (amb)	Meter oF (1)	Meter oF (2)	Meter oF (amb)	Meter Vac. In. Hg. (1)	Meter Vac. In. Hg. (2)	Dilution Tunnel Temp.	Dilution Tunnel dP	Pro. Rate (%) (1)	Pro. Rate (%) (2)	Scale Reading	Weight Change	Load Side Liquid Flow Rate	Boiler Side Liquid Flow Rate (optional)	Thermopile ΔT	Boiler to Heat Exch. Temp.	Heat Exch to Boiler Temp.	Inlet Load Temp.	Outlet Load Temp.	Stack	Filter (1)	Filter (2)	Ambient		Specific Heat of Inlet Water (BTU/lb-°F)	Mass Flow Rate of Inlet Water (lb/min)	Heat Output, Btu
530	84.118	83.789		0.16	0.16	1.28	1.05		85	86		2.95	2	75	0.046	95	95		0.00												1.001	0.000	0
540	85.720	85.408		0.16	0.16	1.32	1.08		85	85		2.87	2	75	0.045	98	99		0.00												1.001	0.000	0
550	87.333	87.020		0.16	0.16	1.33	1.05		84	84		2.86	2	74	0.045	98	99		0.00												1.001	0.000	0
560	88.925	88.625		0.16	0.16	1.28	1.05		83	84		2.82	2	73	0.044	98	99		0.00												1.001	0.000	0
570	90.512	90.230		0.16	0.16	1.28	1.05		83	83		2.81	2	73	0.045	97	98		0.00												1.001	0.000	0
580	92.098	91.833		0.16	0.16	1.27	1.05		83	83		2.81	2	73	0.043	99	100		0.00												1.001	0.000	0
590	93.681	93.434		0.16	0.16	1.28	1.05		82	83		2.82	2	72	0.045	97	98		0.00												1.001	0.000	0
600	95.268	95.038		0.16	0.16	1.29	1.05		82	83		2.82	2	72	0.043	99	100		0.00												1.001	0.000	0
610	96.853	96.641		0.16	0.16	1.27	1.05		82	82		2.80	2	72	0.042	100	102		0.00												1.001	0.000	0
620	98.449	98.243		0.16	0.16	1.31	1.05		82	82		2.86	2	78	0.046	97	98		0.00												1.001	0.000	0
630	100.051	99.845		0.16	0.16	1.31	1.05		82	82		2.85	2	82	0.043	101	101		0.00												1.001	0.000	0
640	101.654	101.444		0.16	0.16	1.31	1.05		82	83		2.86	2	86	0.046	98	98		0.00												1.001	0.000	0
650	103.254	103.041		0.16	0.16	1.30	1.04		83	83		2.87	2	87	0.041	104	104		0.00												1.001	0.000	0
660	104.853	104.637		0.16	0.16	1.31	1.04		84	84		2.87	2	87	0.045	99	99		0.00												1.001	0.000	0
670	106.454	106.231		0.16	0.16	1.29	1.04		85	85		2.87	2	88	0.044	100	100		0.00												1.001	0.000	0
680	108.054	107.825		0.16	0.16	1.31	1.04		86	86		2.88	2	90	0.046	98	98		0.00												1.001	0.000	0
690	109.655	109.420		0.16	0.16	1.30	1.04		87	87		2.88	2	88	0.046	97	97		0.00												1.001	0.000	0
700	111.259	111.017		0.16	0.16	1.30	1.04		87	88		2.88	2	84	0.046	97	97		0.00												1.001	0.000	0
710	112.863	112.615		0.16	0.16	1.30	1.03		88	88		2.90	2	84	0.042	102	101		0.00												1.001	0.000	0
720	114.471	114.217		0.16	0.16	1.31	1.05		87	88		2.86	2	74	0.045	98	97		0.00												1.001	0.000	0
730	116.083	115.824		0.16	0.16	1.31	1.06		87	87		2.87	2	73	0.046	97	97		0.00												1.001	0.000	0
740	117.696	117.431		0.16	0.16	1.31	1.05		86	86		2.86	2	73	0.049	94	94		0.00												1.001	0.000	0
750	119.305	119.034		0.16	0.16	1.32	1.05		85	86		2.90	2	97	0.042	104	103		0.00												1.001	0.000	0
760	120.903	120.619		0.16	0.16	1.29	1.02		85	85		2.95	2	116	0.043	103	103		0.00												1.001	0.000	0
770	122.485	122.172		0.16	0.16	1.28	0.96		84	85		2.98	2	88	0.042	101	100		0.00												1.001	0.000	0
780	124.070	123.709		0.16	0.15	1.27	0.98		84	84		2.98	2	75	0.042	100	97		0.00												1.001	0.000	0
790	125.663	125.283		0.16	0.16	1.31	1.05		83	84		2.93	2	75	0.045	98	96		0.00												1.001	0.000	0
800	127.275	126.887		0.16	0.16	1.33	1.05		83	84		2.88	2	75	0.043	101	101		0.00												1.001	0.000	0
810	128.890	128.491		0.16	0.16	1.33	1.05		83	83		2.88	2	74	0.044	100	99		0.00												1.001	0.000	0
820	130.505	130.094		0.16	0.16	1.32	1.05		83	83		2.89	2	74	0.044	100	99		0.00												1.001	0.000	0
830	132.119	131.698		0.16	0.16	1.33	1.05		83	83		2.87	2	74	0.046	98	97		0.00												1.001	0.000	0
840	133.733	133.300		0.16	0.16	1.33	1.05		83	83		2.89	2	74	0.043	101	101		0.00												1.001	0.000	0
850	135.345	134.905		0.16	0.16	1.32	1.05		83	83		2.87	2	74	0.045	99	98		0.00												1.001	0.000	0
860	136.953	136.509		0.16	0.16	1.31	1.05		82	83		2.87	2	74	0.043	101	101		0.00												1.001	0.000	0
870	138.563	138.112		0.16	0.16	1.31	1.04		82	83		2.89	2	78	0.041	104	103		0.00												1.001	0.000	0
880	140.171	139.715		0.16	0.16	1.32	1.05		82	83		2.86	2	74	0.046	97	97		0.00												1.001	0.000	0
890	141.779	141.320		0.16	0.16	1.31	1.05		82	83		2.87	2	74	0.048	95	95		0.00												1.001	0.000	0
900	143.389	142.923		0.16	0.16	1.32	1.04		82	83		2.87	2	80	0.044	100	100		0.00												1.001	0.000	0
910	144.996	144.527		0.16	0.16	1.32	1.05		82	82		2.87	2	74	0.044	100	100		0.00												1.001	0.000	0
920	146.604	146.131		0.16	0.16	1.32	1.05		82	82		2.87	2	74	0.045	99	99		0.00												1.001	0.000	0
930	148.212	147.735		0.16	0.16	1.32	1.05		82	82		2.86	2	74	0.042	102	102		0.00												1.001	0.000	0
940	149.820	149.339		0.16	0.16	1.32	1.06		82	82		2.87	2	74	0.043	101	101		0.00												1.001	0.000	0
950	151.427	150.947		0.16	0.16	1.32	1.08		82	82		2.86	2	74	0.044	100	100		0.00												1.001	0.000	0
960	153.035	152.571		0.16	0.16	1.32	1.08		82	82		2.87	2	74	0.046	97	99		0.00												1.001	0.000	0
970	154.642	154.194		0.16	0.16	1.31	1.08		82	82		2.87	2	75	0.045	99	100		0.00												1.001	0.000	0
980	156.250	155.819		0.16	0.16	1.32	1.07		82	82		2.87	2	75	0.043	101	102		0.00												1.001	0.000	0
990	157.858	157.443		0.16	0.16	1.32	1.07		82	82		2.86	2	75	0.044	100	101		0.00												1.001	0.000	0
1000	159.465	159.058		0.16	0.16	1.32	1.07		82	82		2.86	2	74	0.045	98	99		0.00												1.001	0.000	0
1010	161.071	160.672		0.16	0.16	1.32	1.07		82	83		2.89	2	94	0.045	100	101		0.00												1.001	0.000	0
1020	162.669	162.273		0.16	0.16	1.30	1.05		82	83		2.93	2	115	0.041	106	107		0.00												1.001	0.000	0
1030	164.252	163.844		0.16	0.16	1.28	1.00		82	83		3.00	2	91	0.044	100	99		0.00												1.001	0.000	0
1040	165.836	165.414		0.16	0.16	1.32	1.07		82	83		3.01	2	77	0.045	97	97		0.00												1.001	0.000	0
1050	167.442	167.040		0.16	0.16	1.32	1.10		82	83		2.94	2	76	0.045	99	100		0.00												1.001	0.000	0
1060	169.050	168.683		0.16	0.16	1.32	1.11		82	83		2.90	2	75	0.042	102	104		0.00												1.001	0.000	0
1070	170.656	170.308		0.16	0.16	1.30	1.06		82	83		2.87	2	75	0.043	101	102		0.00												1.001	0.000	0
1080	172.258	171.915		0.16	0.16	1.30	1.06		83	83		2.86	2	75	0.043	100	101		0.00												1.001	0.000	0
1090	173.857	173.521		0.16	0.16	1.31	1.05		83	83		2.87	2	75	0.044	99	100		0.00												1.001	0.000	0
1100	175.458	175.127		0.16	0.16	1.30	1.04		83	83		2.89	2	79	0.042	102	102		0.00												1.001	0.000	0
1110	177.060	176.734		0.16	0.16	1.30	1.06		83	83		2.85	2	75	0.043	100	101		0.00												1.001	0.000	0
1120	178.660	178.342		0.16	0.16	1.31	1.06		83	83		2.86	2	75	0.043	100	101		0.00												1.001	0.000	0
1130	180.263	179.951		0.16	0.16	1.30	1.05		83	83		2.89	2	82	0.043	101	102		0.00												1.001	0.000	0
1140	181.863	181.557		0.16	0.16	1.31	1.06		83	83		2.86	2	75	0.046	97	98		0.00												1.001	0.000	0

Elapsed Time	Particulate Sampling Data																	Fuel Weight, lb		Flow, gpm		Temperature Data, oF														
	Gas Meter Cubic Feet (1)	Gas Meter Cubic Feet (2)	Gas Meter Cubic Feet (amb)	Sample Rate, cfm (1)	Sample Rate, cfm (2)	Orifice dH (1)	Orifice dH (2)	Orifice dH (amb)	Meter oF (1)	Meter oF (2)	Meter oF (amb)	Meter Vac. In. Hg. (1)	Meter Vac. In. Hg. (2)	Dilution Tunnel Temp.	Dilution Tunnel dP	Pro. Rate (%) (1)	Pro. Rate (%) (2)	Scale Reading	Weight Change	Load Side Liquid Flow Rate	Boiler Side Liquid Flow Rate (optional)	Thermopile ΔT	Boiler to Heat Exch. Temp.	Heat Exch to Boiler Temp.	Inlet Load Temp.	Outlet Load Temp.	Stack	Filter (1)	Filter (2)	Ambient		Specific Heat of Inlet Water (BTU/lb-°F)	Mass Flow Rate of Inlet Water (lb/min)	Heat Output, Btu
1150	183.465	183.166		0.16	0.16	1.31	1.06		83	83		2.86	2	75	0.044	99	100		0.00												1.001	0.000	0
1160	185.068	184.775		0.16	0.16	1.31	1.05		83	83		2.86	2	75	0.041	103	103		0.00												1.001	0.000	0
1170	186.669	186.384		0.16	0.16	1.32	1.06		83	83		2.87	2	75	0.041	103	103		0.00												1.001	0.000	0
1180	188.273	187.993		0.16	0.16	1.31	1.06		83	83		2.85	2	75	0.045	98	99		0.00												1.001	0.000	0
1190	189.875	189.603		0.16	0.16	1.31	1.06		83	83		2.85	2	75	0.039	105	106		0.00												1.001	0.000	0
1200	191.478	191.212		0.16	0.16	1.31	1.06		83	83		2.86	2	75	0.044	99	100		0.00												1.001	0.000	0
1210	193.081	192.821		0.16	0.16	1.31	1.06		83	83		2.87	2	74	0.045	98	99		0.00												1.001	0.000	0
1220	194.684	194.421		0.16	0.16	1.31	1.04		83	83		2.87	2	74	0.042	101	102		0.00												1.001	0.000	0
1230	196.287	196.011		0.16	0.16	1.32	1.04		83	83		2.87	2	74	0.045	98	98		0.00												1.001	0.000	0
1240	197.890	197.603		0.16	0.16	1.31	1.04		83	83		2.85	2	75	0.041	103	102		0.00												1.001	0.000	0
1250	199.495	199.196		0.16	0.16	1.31	1.04		83	83		2.87	2	75	0.042	102	101		0.00												1.001	0.000	0
1260	201.098	200.787		0.16	0.16	1.31	1.04		83	83		2.86	2	75	0.043	100	100		0.00												1.001	0.000	0
1270	202.701	202.379		0.16	0.16	1.31	1.03		83	83		2.88	2	86	0.042	103	102		0.00												1.001	0.000	0
1280	204.297	203.961		0.16	0.16	1.31	1.02		83	83		2.90	2	110	0.039	108	108		0.00												1.001	0.000	0
1290	205.884	205.523		0.16	0.16	1.28	0.99		83	84		2.98	2	113	0.043	103	101		0.00												1.001	0.000	0
1300	207.465	207.076		0.16	0.16	1.29	1.00		83	84		2.93	2	79	0.045	97	96		0.00												1.001	0.000	0
1310	209.057	208.647		0.16	0.16	1.30	1.03		83	84		2.89	2	76	0.043	100	99		0.00												1.001	0.000	0
1320	210.657	210.235		0.16	0.16	1.31	1.04		83	83		2.87	2	75	0.041	103	102		0.00												1.001	0.000	0
1330	212.259	211.824		0.16	0.16	1.31	1.04		83	84		2.87	2	75	0.039	105	105		0.00												1.001	0.000	0
1340	213.862	213.413		0.16	0.16	1.31	1.03		83	84		2.86	2	75	0.043	100	100		0.00												1.001	0.000	0
1350	215.464	215.001		0.16	0.16	1.31	1.04		83	84		2.87	2	76	0.042	102	101		0.00												1.001	0.000	0
1360	217.064	216.589		0.16	0.16	1.31	1.03		83	84		2.87	2	76	0.045	98	97		0.00												1.001	0.000	0
1370	218.664	218.175		0.16	0.16	1.30	1.03		84	84		2.87	2	76	0.045	98	97		0.00												1.001	0.000	0
1380	220.267	219.765		0.16	0.16	1.31	1.04		84	84		2.86	2	76	0.044	99	99		0.00												1.001	0.000	0
1390	221.870	221.356		0.16	0.16	1.31	1.04		84	84		2.86	2	75	0.042	101	101		0.00												1.001	0.000	0
1400	223.472	222.945		0.16	0.16	1.31	1.04		84	84		2.86	2	75	0.043	100	100		0.00												1.001	0.000	0
1410	225.074	224.536		0.16	0.16	1.31	1.03		84	84		2.86	2	75	0.044	99	99		0.00												1.001	0.000	0
1420	226.678	226.127		0.16	0.16	1.30	1.04		83	84		2.86	2	75	0.040	104	103		0.00												1.001	0.000	0
1430	228.280	227.716		0.16	0.16	1.31	1.04		83	84		2.86	2	75	0.045	98	97		0.00												1.001	0.000	0
1440	229.884	229.308		0.16	0.16	1.31	1.03		83	84		2.86	2	74	0.045	98	97		0.00												1.001	0.000	0
1450	231.487	230.899		0.16	0.16	1.31	1.04		83	84		2.87	2	75	0.045	98	97		0.00												1.001	0.000	0
1460	233.092	232.490		0.16	0.16	1.31	1.04		83	84		2.87	2	75	0.043	101	100		0.00												1.001	0.000	0
1470	234.695	234.083		0.16	0.16	1.32	1.04		83	84		2.87	2	74	0.045	98	98		0.00												1.001	0.000	0
1480	236.299	235.675		0.16	0.16	1.31	1.04		83	84		2.87	2	74	0.045	98	97		0.00												1.001	0.000	0
1490	237.902	237.268		0.16	0.16	1.32	1.04		83	84		2.87	2	74	0.041	103	102		0.00												1.001	0.000	0
1500	239.505	238.861		0.16	0.16	1.31	1.05		83	83		2.86	2	74	0.045	98	98		0.00												1.001	0.000	0
1510	241.109	240.455		0.16	0.16	1.32	1.04		83	83		2.87	2	75	0.041	103	103		0.00												1.001	0.000	0
1520	242.712	242.049		0.16	0.16	1.31	1.04		83	83		2.86	2	74	0.042	101	101		0.00												1.001	0.000	0
1530	244.315	243.639		0.16	0.16	1.32	1.04		83	83		2.88	2	97	0.044	101	101		0.00												1.001	0.000	0
1540	245.910	245.221		0.16	0.16	1.31	1.03		83	83		2.92	2	113	0.043	103	103		0.00												1.001	0.000	0
1550	247.496	246.783		0.16	0.16	1.29	1.00		83	83		2.94	2	87	0.043	100	99		0.00												1.001	0.000	0
1560	249.086	248.354		0.16	0.16	1.30	1.03		83	83		2.90	2	76	0.039	105	104		0.00												1.001	0.000	0
1570	250.685	249.941		0.16	0.16	1.31	1.04		83	84		2.87	2	75	0.046	97	96		0.00												1.001	0.000	0
1580	252.286	251.531		0.16	0.16	1.31	1.03		83	84		2.86	2	75	0.043	100	100		0.00												1.001	0.000	0
1590	253.888	253.121		0.16	0.16	1.30	1.03		83	84		2.88	2	75	0.044	99	99		0.00												1.001	0.000	0
1600	255.488	254.711		0.16	0.16	1.31	1.03		83	84		2.86	2	75	0.045	98	97		0.00												1.001	0.000	0
1610	257.089	256.299		0.16	0.16	1.31	1.04		83	84		2.87	2	75	0.045	98	97		0.00												1.001	0.000	0
1620	258.690	257.887		0.16	0.16	1.31	1.03		83	84		2.88	2	75	0.043	100	100		0.00												1.001	0.000	0
1630	260.291	259.478		0.16	0.16	1.31	1.04		83	84		2.87	2	75	0.043	100	100		0.00												1.001	0.000	0
1640	261.893	261.069		0.16	0.16	1.31	1.04		83	83		2.87	2	75	0.047	96	96		0.00												1.001	0.000	0
1650	263.495	262.659		0.16	0.16	1.31	1.03		83	83		2.89	2	78	0.041	103	103		0.00												1.001	0.000	0
1660	265.097	264.252		0.16	0.16	1.31	1.03		83	83		2.86	2	74	0.044	99	99		0.00												1.001	0.000	0
1670	266.700	265.843		0.16	0.16	1.31	1.04		83	83		2.86	2	74	0.042	101	101		0.00												1.001	0.000	0
1680	268.301	267.434		0.16	0.16	1.31	1.03		83	83		2.89	2	79	0.042	102	101		0.00												1.001	0.000	0
1690	269.903	269.025		0.16	0.16	1.30	1.04		83	83		2.86	2	74	0.043	100	100		0.00												1.001	0.000	0
1700	271.504	270.615		0.16	0.16	1.31	1.04		83	83		2.87	2	74	0.044	99	99		0.00												1.001	0.000	0
1710	273.106	272.206		0.16	0.16	1.31	1.04		83	83		2.86	2	74	0.042	101	101		0.00												1.001	0.000	0
1720	274.709	273.797		0.16	0.16	1.31	1.03		83	83		2.86	2	74	0.044	99	99		0.00												1.001	0.000	0
1730	276.310	275.387		0.16	0.16	1.31	1.04		83	83		2.86	2	74	0.042	101	101		0.00												1.001	0.000	0
1740	277.914	276.978		0.16	0.16	1.31	1.03		83	83		2.86	2	74	0.041	103	102		0.00												1.001	0.000	0
1750	279.515	278.570		0.16	0.16	1.31	1.04		83	83		2.86	2	74	0.046	97	97		0.00												1.001	0.000	0
1760	281.117	280.160		0.16	0.16	1.31	1.04		83	83		2.86	2	74	0.045	98	98		0.00												1.001	0.000	0

Elapsed Time	Particulate Sampling Data																	Fuel Weight, lb		Flow, gpm		Temperature Data, oF														
	Gas Meter Cubic Feet (1)	Gas Meter Cubic Feet (2)	Gas Meter Cubic Feet (amb)	Sample Rate, cfm (1)	Sample Rate, cfm (2)	Orifice dH (1)	Orifice dH (2)	Orifice dH (amb)	Meter oF (1)	Meter oF (2)	Meter oF (amb)	Meter Vac. In. Hg. (1)	Meter Vac. In. Hg. (2)	Dilution Tunnel Temp.	Dilution Tunnel dP	Pro. Rate (%) (1)	Pro. Rate (%) (2)	Scale Reading	Weight Change	Load Side Liquid Flow Rate	Boiler Side Liquid Flow Rate (optional)	Thermopile ΔT	Boiler to Heat Exch. Temp.	Heat Exch to Boiler Temp.	Inlet Load Temp.	Outlet Load Temp.	Stack	Filter (1)	Filter (2)	Ambient		Specific Heat of Inlet Water (BTU/lb-°F)	Mass Flow Rate of Inlet Water (lb/min)	Heat Output, Btu
1770	282.720	281.751		0.16	0.16	1.31	1.04		83	83		2.87	2	74	0.041	103	102		0.00												1.001	0.000	0
1780	284.321	283.343		0.16	0.16	1.31	1.03		83	83		2.86	2	74	0.040	104	104		0.00												1.001	0.000	0
1790	285.919	284.928		0.16	0.16	1.31	1.04		83	83		2.89	2	106	0.041	105	105		0.00												1.001	0.000	0
1800	287.511	286.504		0.16	0.16	1.30	1.02		83	83		2.91	2	115	0.043	103	103		0.00												1.001	0.000	0
1810	289.099	288.070		0.16	0.16	1.29	1.01		83	83		2.89	2	79	0.044	99	98		0.00												1.001	0.000	0
1820	290.695	289.654		0.16	0.16	1.31	1.03		83	83		2.86	2	75	0.046	97	96		0.00												1.001	0.000	0
1830	292.295	291.240		0.16	0.16	1.31	1.03		83	83		2.87	2	74	0.044	99	98		0.00												1.001	0.000	0
1840	293.894	292.828		0.16	0.16	1.30	1.03		83	83		2.86	2	74	0.045	98	97		0.00												1.001	0.000	0
1850	295.494	294.415		0.16	0.16	1.30	1.03		83	83		2.87	2	74	0.045	98	97		0.00												1.001	0.000	0
1860	297.094	296.002		0.16	0.16	1.31	1.03		83	83		2.86	2	74	0.043	100	100		0.00												1.001	0.000	0
1870	298.693	297.589		0.16	0.16	1.31	1.03		83	83		2.86	2	74	0.040	104	103		0.00												1.001	0.000	0
1880	300.291	299.175		0.16	0.16	1.31	1.03		83	83		2.87	2	74	0.044	99	98		0.00												1.001	0.000	0
1890	301.892	300.764		0.16	0.16	1.30	1.03		83	83		2.86	2	74	0.042	101	101		0.00												1.001	0.000	0
1900	303.492	302.353		0.16	0.16	1.30	1.03		83	83		2.87	2	74	0.046	97	96		0.00												1.001	0.000	0
1910	305.091	303.941		0.16	0.16	1.31	1.03		83	83		2.86	2	74	0.044	99	98		0.00												1.001	0.000	0
1920	306.692	305.529		0.16	0.16	1.30	1.03		83	83		2.87	2	74	0.045	98	97		0.00												1.001	0.000	0
1930	308.292	307.118		0.16	0.16	1.30	1.03		83	83		2.87	2	74	0.043	100	100		0.00												1.001	0.000	0
1940	309.890	308.706		0.16	0.16	1.30	1.03		83	83		2.86	2	74	0.040	104	103		0.00												1.001	0.000	0
1950	311.490	310.295		0.16	0.16	1.30	1.03		83	83		2.86	2	74	0.045	98	97		0.00												1.001	0.000	0
1960	313.090	311.883		0.16	0.16	1.30	1.03		82	83		2.86	2	74	0.046	97	96		0.00												1.001	0.000	0
1970	314.689	313.472		0.16	0.16	1.31	1.03		83	83		2.87	2	74	0.039	105	105		0.00												1.001	0.000	0
1980	316.290	315.062		0.16	0.16	1.30	1.03		82	83		2.86	2	73	0.044	99	99		0.00												1.001	0.000	0
1990	317.890	316.652		0.16	0.16	1.31	1.02		82	83		2.87	2	73	0.044	99	99		0.00												1.001	0.000	0
2000	319.489	318.240		0.16	0.16	1.30	1.03		82	83		2.85	2	74	0.046	97	96		0.00												1.001	0.000	0
2010	321.089	319.829		0.16	0.16	1.30	1.03		82	83		2.87	2	73	0.041	103	102		0.00												1.001	0.000	0
2020	322.689	321.419		0.16	0.16	1.30	1.03		82	83		2.86	2	74	0.043	100	100		0.00												1.001	0.000	0
2030	324.288	323.008		0.16	0.16	1.30	1.03		82	83		2.85	2	75	0.044	99	99		0.00												1.001	0.000	0
2040	325.887	324.597		0.16	0.16	1.30	1.03		82	83		2.86	2	74	0.040	104	103		0.00												1.001	0.000	0
2050	327.485	326.192		0.16	0.16	1.30	1.06		82	83		2.86	2	101	0.040	106	106		0.00												1.001	0.000	0
2060	329.077	327.786		0.16	0.16	1.30	1.04		82	83		2.90	2	115	0.043	104	104		0.00												1.001	0.000	0
2070	330.661	329.365		0.16	0.16	1.28	1.02		82	83		2.90	2	93	0.044	100	100		0.00												1.001	0.000	0
2080	332.263	330.962		0.16	0.16	1.31	1.05		83	84		2.91	2	87	0.043	101	101		0.00												1.001	0.000	0
2090	333.870	332.569		0.16	0.16	1.31	1.05		84	85		2.91	2	87	0.042	103	103		0.00												1.001	0.000	0
2100	335.477	334.176		0.16	0.16	1.30	1.05		85	86		2.91	2	89	0.040	105	105		0.00												1.001	0.000	0
2110	337.084	335.782		0.16	0.16	1.30	1.05		86	87		2.91	2	88	0.044	100	100		0.00												1.001	0.000	0
2120	338.691	337.388		0.16	0.16	1.31	1.05		87	88		2.91	2	85	0.044	100	100		0.00												1.001	0.000	0
2130	340.301	338.996		0.16	0.16	1.30	1.05		88	89		2.91	2	81	0.042	102	102		0.00												1.001	0.000	0
2140	341.912	340.608		0.16	0.16	1.31	1.06		88	89		2.91	2	77	0.040	104	104		0.00												1.001	0.000	0
2150	343.515	342.215		0.16	0.16	1.29	1.05		88	89		2.87	2	75	0.044	98	99		0.00												1.001	0.000	0
2160	345.118	343.822		0.16	0.16	1.29	1.05		87	88		2.87	2	73	0.043	99	100		0.00												1.001	0.000	0
2170	346.721	345.429		0.16	0.16	1.30	1.04		87	87		2.87	2	74	0.041	102	102		0.00												1.001	0.000	0
2180	348.325	347.037		0.16	0.16	1.29	1.05		86	86		2.87	2	75	0.044	99	99		0.00												1.001	0.000	0
2190	349.928	348.644		0.16	0.16	1.29	1.05		86	86		2.86	2	76	0.043	100	100		0.00												1.001	0.000	0
2200	351.528	350.251		0.16	0.16	1.30	1.05		85	86		2.86	2	78	0.041	103	103		0.00												1.001	0.000	0
2210	353.129	351.857		0.16	0.16	1.28	1.05		85	85		2.86	2	76	0.044	99	99		0.00												1.001	0.000	0
2220	354.729	353.463		0.16	0.16	1.28	1.04		85	85		2.87	2	76	0.044	99	99		0.00												1.001	0.000	0
2230	356.328	355.069		0.16	0.16	1.29	1.04		85	85		2.88	2	82	0.043	100	101		0.00												1.001	0.000	0
2240	357.928	356.674		0.16	0.16	1.28	1.04		85	85		2.86	2	76	0.043	100	101		0.00												1.001	0.000	0
2250	359.529	358.279		0.16	0.16	1.29	1.04		85	85		2.86	2	76	0.045	98	98		0.00												1.001	0.000	0
2260	361.128	359.883		0.16	0.16	1.29	1.04		85	85		2.85	2	77	0.044	99	99		0.00												1.001	0.000	0
2270	362.727	361.487		0.16	0.16	1.29	1.04		85	85		2.87	2	76	0.040	104	104		0.00												1.001	0.000	0
2280	364.328	363.092		0.16	0.16	1.29	1.04		85	85		2.86	2	77	0.042	101	102		0.00												1.001	0.000	0
2290	365.927	364.698		0.16	0.16	1.29	1.04		84	85		2.86	2	76	0.043	100	101		0.00												1.001	0.000	0
2300	367.527	366.303		0.16	0.16	1.29	1.04		84	85		2.85	2	76	0.038	106	107		0.00												1.001	0.000	0
2310	369.126	367.909		0.16	0.16	1.28	1.04		84	85		2.86	2	76	0.044	99	99		0.00												1.001	0.000	0
2320	370.724	369.512		0.16	0.16	1.28	1.04		84	85		2.85	2	85	0.042	102	102		0.00												1.001	0.000	0
2330	372.318	371.112		0.16	0.16	1.29	1.04		84	85		2.88	2	105	0.041	105	105		0.00												1.001	0.000	0
2340	373.909	372.703		0.16	0.16	1.29	1.03		84	85		2.90	2	114	0.041	105	106		0.00												1.001	0.000	0
2350	375.501	374.296		0.16	0.16	1.28	1.03		84	85		2.87	2	79	0.043	100	100		0.00												1.001	0.000	0
2360	377.096	375.894		0.16	0.16	1.28	1.03		84	85		2.86	2	77	0.042	101	101		0.00												1.001	0.000	0
2370	378.574	377.493		0.15	0.16	1.28	1.03		84	85		2.86	2	76	0.040	96	104		0.00												1.001	0.000	0
2380	379.950	379.092		0.14	0.16	1.28	1.02		84	85		2.85	2	76	0.040	89	104		0.00												1.001	0.000	0

Elapsed Time	Particulate Sampling Data																	Fuel Weight, lb		Flow, gpm		Temperature Data, oF														
	Gas Meter Cubic Feet (1)	Gas Meter Cubic Feet (2)	Gas Meter Cubic Feet (amb)	Sample Rate, cfm (1)	Sample Rate, cfm (2)	Orifice dH (1)	Orifice dH (2)	Orifice dH (amb)	Meter oF (1)	Meter oF (2)	Meter oF (amb)	Meter Vac. In. Hg. (1)	Meter Vac. In. Hg. (2)	Dilution Tunnel Temp.	Dilution Tunnel dP	Pro. Rate (%) (1)	Pro. Rate (%) (2)	Scale Reading	Weight Change	Load Side Liquid Flow Rate	Boiler Side Liquid Flow Rate (optional)	Thermopile ΔT	Boiler to Heat Exch. Temp.	Heat Exch to Boiler Temp.	Inlet Load Temp.	Outlet Load Temp.	Stack	Filter (1)	Filter (2)	Ambient		Specific Heat of Inlet Water (BTU/lb-°F)	Mass Flow Rate of Inlet Water (lb/min)	Heat Output, Btu
2390	381.550	380.691		0.16	0.16	1.29	1.04		84	85		2.88	2	76	0.040	104	104		0.00												1.001	0.000	0
2400	383.093	382.296		0.15	0.16	1.30	1.04		84	85		2.89	2	76	0.044	95	99		0.00												1.001	0.000	0
2410	384.659	383.900		0.16	0.16	1.30	1.04		84	85		2.89	2	76	0.043	98	100		0.00												1.001	0.000	0
2420	386.269	385.504		0.16	0.16	1.30	1.04		84	85		2.89	2	76	0.044	100	99		0.00												1.001	0.000	0
2430	387.877	387.110		0.16	0.16	1.30	1.04		84	85		2.87	2	75	0.041	103	103		0.00												1.001	0.000	0
2440	389.485	388.715		0.16	0.16	1.30	1.04		84	85		2.87	2	76	0.043	101	101		0.00												1.001	0.000	0
2450	391.095	390.321		0.16	0.16	1.30	1.03		84	85		2.87	2	75	0.044	99	99		0.00												1.001	0.000	0
2460	392.704	391.927		0.16	0.16	1.29	1.03		84	85		2.87	2	75	0.041	103	103		0.00												1.001	0.000	0
2470	394.313	393.533		0.16	0.16	1.30	1.03		84	85		2.87	2	75	0.045	98	98		0.00												1.001	0.000	0
2480	395.921	395.139		0.16	0.16	1.30	1.04		84	85		2.88	2	75	0.042	102	102		0.00												1.001	0.000	0
2490	397.532	396.744		0.16	0.16	1.29	1.03		84	85		2.87	2	75	0.041	103	103		0.00												1.001	0.000	0
2500	399.140	398.350		0.16	0.16	1.29	1.03		84	84		2.88	2	75	0.043	101	101		0.00												1.001	0.000	0
2510	400.749	399.956		0.16	0.16	1.30	1.04		84	84		2.86	2	75	0.043	101	101		0.00												1.001	0.000	0
2520	402.358	401.563		0.16	0.16	1.30	1.04		84	84		2.88	2	74	0.044	99	99		0.00												1.001	0.000	0
2530	403.968	403.169		0.16	0.16	1.30	1.03		84	84		2.87	2	74	0.044	99	99		0.00												1.001	0.000	0
2540	405.577	404.775		0.16	0.16	1.29	1.03		84	84		2.88	2	74	0.043	100	101		0.00												1.001	0.000	0
2550	407.181	406.381		0.16	0.16	1.28	1.03		84	84		2.86	2	75	0.041	103	103		0.00												1.001	0.000	0
2560	408.784	407.988		0.16	0.16	1.29	1.03		84	84		2.85	2	74	0.042	101	102		0.00												1.001	0.000	0
2570	410.387	409.594		0.16	0.16	1.28	1.03		84	84		2.86	2	74	0.045	98	98		0.00												1.001	0.000	0
2580	411.988	411.199		0.16	0.16	1.29	1.04		84	84		2.87	2	97	0.041	105	105		0.00												1.001	0.000	0
2590	413.586	412.794		0.16	0.16	1.28	1.02		84	84		2.89	2	109	0.038	110	110		0.00												1.001	0.000	0
2600	415.180	414.383		0.16	0.16	1.27	1.02		84	84		2.88	2	87	0.041	103	103		0.00												1.001	0.000	0
2610	416.779	415.978		0.16	0.16	1.28	1.02		84	84		2.87	2	76	0.046	97	97		0.00												1.001	0.000	0
2620	418.377	417.573		0.16	0.16	1.28	1.02		84	84		2.87	2	75	0.045	98	98		0.00												1.001	0.000	0
2630	419.978	419.170		0.16	0.16	1.28	1.02		84	84		2.88	2	75	0.041	102	103		0.00												1.001	0.000	0
2640	421.578	420.768		0.16	0.16	1.28	1.02		84	84		2.87	2	75	0.044	99	99		0.00												1.001	0.000	0
2650	423.178	422.365		0.16	0.16	1.28	1.02		84	84		2.86	2	74	0.041	102	102		0.00												1.001	0.000	0
2660	424.778	423.964		0.16	0.16	1.28	1.02		84	84		2.86	2	74	0.043	100	100		0.00												1.001	0.000	0
2670	426.379	425.561		0.16	0.16	1.29	1.03		84	84		2.86	2	76	0.044	99	99		0.00												1.001	0.000	0
2680	427.980	427.163		0.16	0.16	1.28	1.03		84	84		2.87	2	74	0.044	99	99		0.00												1.001	0.000	0
2690	429.582	428.766		0.16	0.16	1.28	1.03		84	84		2.87	2	74	0.042	101	102		0.00												1.001	0.000	0
2700	431.184	430.369		0.16	0.16	1.28	1.03		84	84		2.87	2	81	0.044	100	100		0.00												1.001	0.000	0
2710	432.786	431.973		0.16	0.16	1.29	1.03		84	84		2.86	2	74	0.043	100	100		0.00												1.001	0.000	0
2720	434.388	433.575		0.16	0.16	1.28	1.03		84	84		2.88	2	74	0.044	99	99		0.00												1.001	0.000	0
2730	435.990	435.177		0.16	0.16	1.28	1.03		84	84		2.86	2	74	0.043	100	100		0.00												1.001	0.000	0
2740	437.592	436.780		0.16	0.16	1.27	1.03		84	84		2.87	2	74	0.042	101	102		0.00												1.001	0.000	0
2750	439.193	438.383		0.16	0.16	1.28	1.03		84	84		2.86	2	75	0.046	97	97		0.00												1.001	0.000	0
2760	440.795	439.985		0.16	0.16	1.28	1.03		84	84		2.87	2	75	0.043	100	100		0.00												1.001	0.000	0
2770	442.397	441.588		0.16	0.16	1.29	1.03		84	84		2.87	2	75	0.044	99	99		0.00												1.001	0.000	0
2780	443.998	443.190		0.16	0.16	1.29	1.03		84	84		2.86	2	75	0.046	97	97		0.00												1.001	0.000	0
2790	445.601	444.792		0.16	0.16	1.28	1.03		84	84		2.87	2	75	0.042	101	102		0.00												1.001	0.000	0
2800	447.202	446.395		0.16	0.16	1.29	1.03		84	84		2.87	2	75	0.044	99	99		0.00												1.001	0.000	0
2810	448.805	447.998		0.16	0.16	1.29	1.03		84	84		2.86	2	75	0.043	100	100		0.00												1.001	0.000	0
2820	450.407	449.601		0.16	0.16	1.28	1.03		84	84		2.86	2	75	0.042	101	102		0.00												1.001	0.000	0
2830	452.008	451.205		0.16	0.16	1.29	1.03		84	84		2.87	2	75	0.046	97	97		0.00												1.001	0.000	0
2840	453.611	452.808		0.16	0.16	1.28	1.03		84	84		2.87	2	75	0.044	99	99		0.00												1.001	0.000	0
2850	455.213	454.411		0.16	0.16	1.29	1.03		84	84		2.86	2	75	0.046	97	97		0.00												1.001	0.000	0
2860	456.816	456.013		0.16	0.16	1.29	1.04		84	84		2.88	2	91	0.041	104	104		0.00												1.001	0.000	0
2870	458.414	457.609		0.16	0.16	1.29	1.03		84	84		2.89	2	106	0.042	104	104		0.00												1.001	0.000	0
2880	460.008	459.192		0.16	0.16	1.28	1.02		84	84		2.91	2	111	0.041	105	105		0.00												1.001	0.000	0
2890	461.603	460.776		0.16	0.16	1.28	1.01		83	84		2.90	2	78	0.041	103	102		0.00												1.001	0.000	0
2900	463.198	462.362		0.16	0.16	1.28	1.01		84	84		2.90	2	76	0.039	105	104		0.00												1.001	0.000	0
2910	464.794	463.948		0.16	0.16	1.28	1.01		83	84		2.89	2	75	0.045	98	97		0.00												1.001	0.000	0
2920	466.390	465.535		0.16	0.16	1.27	1.01		83	84		2.90	2	75	0.044	99	98		0.00												1.001	0.000	0
2930	467.988	467.123		0.16	0.16	1.28	1.01		83	84		2.91	2	75	0.040	104	103		0.00												1.001	0.000	0
2940	469.584	468.710		0.16	0.16	1.28	1.01		83	84		2.91	2	74	0.042	101	101		0.00												1.001	0.000	0
2950	471.181	470.297		0.16	0.16	1.28	1.02		83	84		2.90	2	74	0.041	102	102		0.00												1.001	0.000	0
2960	472.779	471.888		0.16	0.16	1.28	1.02		83	84		2.88	2	74	0.045	98	97		0.00												1.001	0.000	0
2970	474.379	473.482		0.16	0.16	1.29	1.02		83	84		2.90	2	74	0.042	101	101		0.00												1.001	0.000	0
2980	475.979	475.073		0.16	0.16	1.27	1.02		83	84		2.88	2	74	0.042	101	101		0.00												1.001	0.000	0
2990	477.577	476.665		0.16	0.16	1.29	1.01		83	84		2.90	2	74	0.043	100	100		0.00												1.001	0.000	0
3000	479.177	478.257		0.16	0.16	1.29	1.02		83	84		2.88	2	74	0.044	99	99		0.00												1.001	0.000	0

Elapsed Time	Particulate Sampling Data																Fuel Weight, lb		Flow, gpm		Temperature Data, oF													
	Gas Meter Cubic Feet (1)	Gas Meter Cubic Feet (2)	Gas Meter Cubic Feet (amb)	Sample Rate, cfm (1)	Sample Rate, cfm (2)	Orifice dH (1)	Orifice dH (2)	Orifice dH (amb)	Meter oF (1)	Meter oF (2)	Meter oF (amb)	Meter Vac. In. Hg. (1)	Meter Vac. In. Hg. (2)	Dilution Tunnel Temp.	Dilution Tunnel dP	Pro. Rate (%) (1)	Pro. Rate (%) (2)	Scale Reading	Weight Change	Load Side Liquid Flow Rate	Boiler Side Liquid Flow Rate (optional)	Thermopile ΔT	Boiler to Heat Exch. Temp.	Heat Exch to Boiler Temp.	Inlet Load Temp.	Outlet Load Temp.	Stack	Filter (1)	Filter (2)	Ambient		Specific Heat of Inlet Water (BTU/lb-°F)	Mass Flow Rate of Inlet Water (lb/min)	Heat Output, Btu
3010	480.777	479.850		0.16	0.16	1.29	1.02		83	84		2.89	2	74	0.040	104	103		0.00													1.001	0.000	0
3020	482.376	481.444		0.16	0.16	1.29	1.02		83	84		2.89	2	74	0.041	102	102		0.00													1.001	0.000	0
3030	483.975	483.035		0.16	0.16	1.28	1.02		83	84		2.88	2	74	0.047	96	95		0.00													1.001	0.000	0
3040	485.576	484.629		0.16	0.16	1.28	1.02		83	84		2.88	2	73	0.044	99	99		0.00													1.001	0.000	0
3050	487.175	486.221		0.16	0.16	1.29	1.02		83	84		2.89	2	74	0.043	100	100		0.00													1.001	0.000	0
3060	488.774	487.814		0.16	0.16	1.29	1.02		83	84		2.89	2	74	0.042	101	101		0.00													1.001	0.000	0
3070	490.374	489.407		0.16	0.16	1.29	1.02		83	83		2.88	2	73	0.042	101	101		0.00													1.001	0.000	0
3080	491.974	491.000		0.16	0.16	1.28	1.02		83	83		2.88	2	73	0.042	101	101		0.00													1.001	0.000	0
3090	493.572	492.593		0.16	0.16	1.29	1.02		83	83		2.90	2	74	0.045	98	98		0.00													1.001	0.000	0
3100	495.172	494.185		0.16	0.16	1.29	1.02		83	83		2.89	2	93	0.041	104	104		0.00													1.001	0.000	0
	495.172	494.185	0.000			1.30	1.04	#####	83	83	#####			78	0.043					#DIV/0!	#DIV/0!	#DIV/0!	#DIV/0!	#DIV/0!	#DIV/0!	#DIV/0!		#DIV/0!	#DIV/0!	#DIV/0!	#DIV/0!				0
																																	TOTAL:	0

Hydronic Heating Appliances - Test Method ASTM 2618
Results

Manufacturer: Central Boiler, Wood Master
Model: Edge 960, CleanFire 900
Tracking No.: 2430
Project No.: 0117WB041E
Run: 3
Test Date: December 14, 2020

Burn Rate	**kg/hr dry**
Average Tunnel Temperature	78 degrees F
Average Gas Velocity in Dilution Tunnel - vs	14.5 feet/second
Average Gas Flow Rate in Dilution Tunnel - Qsd	39663 dscf/hour
Average Delta p	0.043 inches H20
Average Delta H	1.30 inches H20
Total Time of Test	3100 minutes

PARTICULATE EMISSIONS RESULTS

First Hour:	g/hr
	g/kg
	lb/mmBTU output
Complete Run:	g/hr
	g/kg
	lb/mmBTU output

	SAMPLE TRAIN 1	SAMPLE TRAIN 2	AMBIENT SAMPLE TRAIN
Total Sample Volume - Vm	495.17 cubic feet	494.19 cubic feet	0.00 cubic feet
Average Gas Meter Temperature	83 degrees F	83 degrees F	#DIV/0! degrees F
Total Sample Volume (Standard Conditions) - Vmstd	492.7 dscf	483.3 dscf	#DIV/0! dscf
Total Particulates - mn			
Particulate Concentration (dry-standard)			
Particulate Emissions			
Difference from Average			
	#DIV/0!		

AVERAGE

Total Sample Volume - Vm	494.68 cubic feet
Average Gas Meter Temperature	83 degrees F
Total Sample Volume (Standard Conditions) - Vmstd	488.0 dscf
Particulate Concentration (dry-standard)	grams/dscf
Particulate Emissions	grams
7.5% of the average particulate emissions	grams

ADDITIONAL ACCEPTANCE CRITERIA

Proportional Rate Variation >80%	**Acceptable**
90% of PR Values between 90-110%	**Acceptable**

SAMPLE TRAIN 1 - FIRST HOUR

Total Sample Volume - Vm	95.27 cubic feet
Average Gas Meter Temperature	80 degrees F
Total Sample Volume (Standard Conditions) - Vmstd	95.80 dscf
Total Particulates - mn	mg
Particulate Concentration (dry-standard)	grams/dscf
Particulate Emissions	grams
Burn Rate	(dry kg/hr)
Heat Output Rate	BTU/hr

Run 4

Hydronic Heating Appliances - Test Method ASTM 2618
Results

Manufacturer: Central Boiler - WoodMaster
Model: Edge 960 - CleanFire 900
Tracking No.: 2430
Project No.: 0117WB041E
Run: 4
Test Date: December 21, 2020

Burn Rate	**5.64 kg/hr dry**
Average Tunnel Temperature	81 degrees F
Average Gas Velocity in Dilution Tunnel - vs	15.4 feet/second
Average Gas Flow Rate in Dilution Tunnel - Qsd	42005 dscf/hour
Average Delta p	0.044 inches H20
Average Delta H	1.31 inches H20
Total Time of Test	1538 minutes

PARTICULATE EMISSIONS RESULTS

First Hour:	**4.84** g/hr **0.35** g/kg **0.12** lb/mmBTU output
Complete Run:	**2.00** g/hr **0.35** g/kg **0.05** lb/mmBTU output

	SAMPLE TRAIN 1	SAMPLE TRAIN 2	AMBIENT SAMPLE TRAIN
Total Sample Volume - Vm	245.83 cubic feet	244.70 cubic feet	477.49 cubic feet
Average Gas Meter Temperature	83 degrees F	83 degrees F	70 degrees F
Total Sample Volume (Standard Conditions) - Vmstd	245.2 dscf	240.0 dscf	465.7 dscf
Total Particulates - mn	11.8 mg	11.8 mg	0.5 mg
Particulate Concentration (dry-standard)	0.00005 grams/dscf	0.00005 grams/dscf	0.000001 grams/dscf
Particulate Emissions	50.65 grams	51.78 grams	
Difference from Average	0.57 grams	0.57 grams	

Results Are Acceptable

AVERAGE

Total Sample Volume - Vm	245.27 cubic feet
Average Gas Meter Temperature	83 degrees F
Total Sample Volume (Standard Conditions) - Vmstd	242.6 dscf
Particulate Concentration (dry-standard)	0.00005 grams/dscf
Particulate Emissions	51.22 grams
7.5% of the average particulate emissions	3.84 grams

ADDITIONAL ACCEPTANCE CRITERIA

Boiler Water Return Temperature >120 °F	**Acceptable**
Proportional Rate Variation >80%	**Not Acceptable**
90% of PR Values between 90-110%	**Acceptable**
Train Precision < 7.5%	**1.66**

SAMPLE TRAIN 1 - FIRST HOUR

Total Sample Volume - Vm	9.56 cubic feet
Average Gas Meter Temperature	79 degrees F
Total Sample Volume (Standard Conditions) - Vmstd	9.46 dscf
Total Particulates - mn	1.1 mg
Particulate Concentration (dry-standard)	0.00012 grams/dscf
Particulate Emissions	4.84 grams
Burn Rate	13.80 (dry kg/hr)
Heat Output Rate	86045 BTU/hr

Hydronic Heating Appliances - Test Method ASTM 2618
Fuel Moisture

Manufacturer:	Central Boiler - WoodMaster
Model:	Edge 960 - CleanFire 900
Tracking No.:	2430
Project No.:	0117WB041E
Technician:	BD, TT
Run #:	4
Test Date:	December 21, 2020

Wet Weight (lb)	% Moisture				
10.4	22.5	23.1	22.9	22.1	22.4
10.7	20	24.2	19.3	20.2	23.6
10.7	23.4	25.4	22.8	21	21.2
10.4	22.9	25.2	18.9	23.1	26.1
10.8	21.4	18.9	21.4	26.5	20.4
10.8	18.6	18.7	21.8	20	21.8
10.6	25.4	27.6	21	23.6	21.2
10.1	20.6	19.3	18.2	24.2	23.4
10.8	25.4	22.6	25.2	22.4	19.6
9.5	24.2	23.6	21.5	20.7	20.2
10.8	21.7	23	19.8	21.9	25.1
10.5	22.1	23.4	19.7	22.5	24.9
9.9	20	18.9	21.4	22.1	23.6
10	21.2	19.8	18.2	20.8	21
10.7	21.7	22.8	23.4	25.3	24.2
10.4	22.5	24.2	19.6	20.7	22.9
10.0	24.6	23.2	19.6	22.7	19.2
10.3	20.8	23.5	24.7	19.8	21.5
10.4	25.2	19.4	25.1	22.5	24.2
10.4	22.7	24.2	18.4	19.3	19.2
10.6	19.3	18.1	22.3	21.4	18.2
10.7	26.2	23.1	18.0	22.5	26.9
10.1	23.1	21.0	20.2	22.1	19.5
10.4	19.0	20.6	21.6	23.7	21.0
10.1	18.1	20.2	18.3	19.0	22.1
10.8	18.4	19.1	20.0	18.9	20.1
9.9	20.0	18.9	19.2	20.6	19.8
10.8	22.8	27.2	25.8	19.1	23.5
10.2	18.7	18.6	18.6	19.8	19.7
10.8	22.1	19.7	19.0	18.2	18.2
10.1	18.0	27.3	25.4	26.8	26.2
10.8	19.1	22.6	18.6	21.8	20.0
10.4	20.4	22.3	26.3	25.6	19.2
10.2	19.2	19.8	23.2	20.5	19.3
10.3	18.3	24.2	21.8	25.1	19.0
12.2	25.1	18.0	25.7	18.1	18.9
11.3	27.1	27.4	26.0	20.1	18.4

Total Weight of Load (lb):	387.9
Total Moisture of Load (%):	21.7

Equipment Numbers:

Hydronic Heating Appliances - Test Method ASTM 2618
Test Data

Run: 4

Manufacturer: Central Boiler - WoodMaster
Model: Edge 960 - CleanFire 900
Tracking No.: 2430
Project No.: 0117WB041E
Test Date: December 21, 2020
Technician: BD, TT
Beginning Clock Time: 18:58
Recording Interval: 1 min.
Total Sampling Time: 1538 min.

Velocity Traverse Data

	Pt.1	Pt.2	Pt.3	Pt.4	Pt.5	Pt.6	Pt.7	Pt.8	Pt.9	Pt.10	Pt.11	Pt.12	Center	
Initial dP	0.048	0.052	0.064	0.062	0.050	0.052	0.040	0.048	0.056	0.062	0.060	0.052	0.044	"H2O
Initial Temp.	76	76	76	76	76	76	77	77	77	77	77	77	76	oF

Air Velocity: Initial: <50 Final: <50 V_{strav} 15.51 ft/sec
Scale Audit: Pre: 10.0 Post: 10.0 Induced Draft: 0 V_{scent} 14.05 ft/sec
Pitot Tube Leak Test: Pre: 0 Post: 0 % Smoke Capture: 100 F_p 1.104
Flue Pipe Cleaned Prior to First Test in Series: Date: 12/8/2020

PM Control Module: 371, 372
Dilution Tunnel MW(dry): 29.00 lb/lb-mole
Dilution Tunnel MW(wet): 28.78 lb/lb-mole
Dilution Tunnel H2O: 2.00 percent
Dilution Tunnel Static: -0.514 "H2O
Pitot Tube Cp: 0.99

	(1)	(2)	(amb)
Meter Box Y Factor:	1.013	0.997	0.97

	Begin	Middle	End	Average	
Barometric Pressure:	29.78	30.43	30.42	30.21	"Hg

Tunnel Velocity: 15.42 ft/sec.
Intial Tunnel Flow: 705.6 scfm
Average Tunnel Flow: 700.1 scfm
Tunnel Area: 0.785 ft2
Post-Test Leak Check (1): 0.000 cfm @ 6 in. Hg
Post-Test Leak Check (2): 0.000 cfm @ 10 in. Hg
Fuel Moisture (dry basis %): 21.7
Total Particulate (1): 11.8
Total Particulate (2): 11.8

Elapsed Time	Particulate Sampling Data																Fuel Weight, lb		Flow, gpm		Temperature Data, oF								Stack			
	Gas Meter Cubic Feet (1)	Gas Meter Cubic Feet (2)	Gas Meter Cubic Feet (amb)	Sample Rate, cfm (1)	Sample Rate, cfm (2)	Orifice dH (1)	Orifice dH (2)	Orifice dH (amb)	Meter oF (1)	Meter oF (2)	Meter oF (amb)	Meter Vac. In. Hg. (1)	Meter Vac. In. Hg. (2)	Dilution Tunnel Temp.	Dilution Tunnel dP	Pro. Rate (%) (1)	Pro. Rate (%) (2)	Scale Reading	Weight Change	Load Side Liquid Flow Rate	Boiler Side Liquid Flow Rate (optional)	Thermopile ΔT	Boiler to Heat Exch. Temp.	Heat Exch to Boiler Temp.	Inlet Load Temp.	Outlet Load Temp.	Stack	Filter (1)	Filter (2)	Ambient		Specific Heat of Inlet Water (BTU/lb-°F)	Mass Flow Rate of Inlet Water (lb/min)	Heat Output, Btu
0	0.000	0.000	0			0.01	1.08	0.36	77	77	72	0.26	1.6	102	0.043			387.9		1.65	15.41	107.21	162.12	152.30	54.22	161.43	252	71	71	72	0.042			
1	0.141	0.157		0.14	0.16	0.01	1.10	0.36	77	77	72	0.26	1.6	86	0.043	90	101	387.0	0.90	1.65	15.43	107.86	162.60	153.02	54.22	162.08	226	71	72	72	0.029	1.001	13.774	1487
2	0.301	0.320		0.16	0.16	0.01	1.09	0.36	77	77	72	0.26	1.6	82	0.045	100	102	385.8	1.20	1.63	15.44	107.98	162.71	153.13	54.23	162.22	205	71	72	72	0.027	1.001	13.610	1471
3	0.460	0.482		0.16	0.16	0.01	1.09	0.36	77	77	72	0.26	1.6	81	0.045	99	101	384.6	1.20	1.65	15.44	107.74	162.46	152.98	54.24	161.98	193	71	72	72	0.026	1.001	13.774	1486
4	0.618	0.644		0.16	0.16	0.01	1.09	0.36	77	77	72	0.26	1.6	81	0.044	100	103	383.5	1.13	1.62	15.45	107.64	162.44	152.83	54.32	161.95	186	71	72	72	0.025	1.001	13.471	1452
5	0.776	0.805		0.16	0.16	1.30	1.14	0.36	77	77	72	2.77	1.7	99	0.043	102	105	381.7	1.78	1.59	15.49	107.70	162.55	152.99	54.30	162.00	227	73	73	72	0.047	1.001	13.286	1433
6	0.934	0.963		0.16	0.16	1.31	0.99	0.36	77	77	72	2.78	1.5	106	0.040	107	107	380.3	1.41	1.63	15.47	108.24	163.12	153.47	54.28	162.53	255	74	74	72	0.046	1.001	13.561	1470
7	1.091	1.117		0.16	0.15	1.31	0.99	0.36	77	77	72	2.77	1.5	110	0.040	106	105	378.8	1.44	1.66	15.46	109.23	164.09	154.35	54.29	163.52	272	75	75	72	0.045	1.001	13.872	1517
8	1.249	1.272		0.16	0.16	1.30	0.99	0.36	77	77	72	2.76	1.5	110	0.044	102	101	377.5	1.36	1.70	15.57	110.07	164.96	155.14	54.30	164.36	276	76	76	72	0.039	1.001	14.152	1560
9	1.407	1.425		0.16	0.15	1.30	0.98	0.36	77	77	72	2.78	1.6	111	0.042	105	102	375.7	1.77	1.59	15.44	110.79	165.67	155.69	54.26	165.05	280	77	76	72	0.047	1.001	13.290	1474
10	1.563	1.579		0.16	0.15	1.30	0.98	0.36	77	77	72	2.78	1.6	110	0.044	101	100	374.3	1.39	1.61	15.50	111.64	166.55	156.47	54.26	165.90	278	78	77	72	0.044	1.001	13.427	1501
11	1.720	1.734		0.16	0.16	1.29	0.98	0.36	77	77	72	2.78	1.6	111	0.042	104	103	372.9	1.36	1.66	15.45	112.54	167.44	157.23	54.26	166.80	283	78	77	72	0.044	1.001	13.799	1555
12	1.876	1.887		0.16	0.15	1.28	0.97	0.36	77	77	72	2.78	1.6	112	0.045	100	98	371.6	1.33	1.63	15.47	113.32	168.19	157.98	54.27	167.59	284	79	78	72	0.048	1.001	13.606	1544
13	2.033	2.040		0.16	0.15	1.28	0.97	0.36	77	77	72	2.79	1.6	110	0.045	100	98	371.2	0.39	1.62	15.48	114.22	169.11	158.75	54.26	168.48	281	79	78	72	0.046	1.001	13.484	1542
14	2.189	2.192		0.16	0.15	1.27	0.96	0.36	77	78	72	2.78	1.6	112	0.044	101	99	369.5	1.73	1.67	15.49	115.13	169.98	159.50	54.22	169.35	285	80	79	72	0.043	1.001	13.937	1606
15	2.347	2.345		0.16	0.15	1.27	0.95	0.36	77	78	72	2.8	1.6	113	0.038	110	107	368.1	1.40	1.67	15.36	115.89	170.75	160.17	54.22	170.11	286	80	79	72	0.047	1.001	13.937	1617
16	2.506	2.497		0.16	0.15	1.26	0.95	0.36	77	78	72	2.81	1.6	113	0.042	105	101	366.8	1.31	1.65	15.48	116.86	171.63	160.99	54.19	171.06	287	81	80	72	0.050	1.001	13.773	1611
17	2.665	2.648		0.16	0.15	1.27	0.95	0.36	78	78	72	2.8	1.6	112	0.040	108	103	364.6	2.23	1.69	15.47	117.83	172.76	161.91	54.20	172.03	286	81	80	72	0.044	1.001	14.095	1663
18	2.824	2.800		0.16	0.15	1.26	0.94	0.36	78	78	72	2.81	1.6	115	0.044	103	99	363.6	0.93	1.50	15.43	118.92	173.67	163.69	54.18	173.10	292	81	80	72	0.051	1.001	12.481	1486
19	2.983	2.954		0.16	0.15	1.31	1.00	0.36	78	78	72	2.87	1.7	114	0.043	104	101	362.3	1.32	1.48	15.51	119.72	174.45	164.55	54.25	173.98	291	82	81	72	0.050	1.001	12.318	1477
20	3.142	3.109		0.16	0.16	1.31	1.01	0.36	78	78	72	2.86	1.7	113	0.043	104	102	361.0	1.35	1.42	15.45	120.62	175.33	165.99	54.32	174.93	290	82	81	72	0.047	1.001	11.835	1429
21	3.301	3.266		0.16	0.16	1.31	1.00	0.36	78	79	72	2.89	1.7	115	0.043	104	103	359.0	1.94	1.44	15.53	121.48	176.26	167.04	54.34	175.82	294	82	81	72	0.047	1.001	11.996	1459
22	3.459	3.421		0.16	0.16	1.31	1.00	0.36	78	79	72	2.88	1.7	116	0.040	107	106	358.6	0.42	1.40	15.46	122.54	177.29	168.64	54.29	176.83	297	82	81	72	0.051	1.001	11.676	1433
23	3.617	3.577		0.16	0.16	1.32	1.00	0.36	78	79	72	2.89	1.7	116	0.044	102	102	357.4	1.24	1.36	15.43	123.35	178.34	169.06	54.51	177.87	297	82	81	72	0.048	1.001	11.353	1402
24	3.775	3.731		0.16	0.15	1.30	0.99	0.36	78	79	72	2.88	1.7	117	0.042	105	103	355.3	2.05	1.44	15.46	124.55	179.39	170.09	54.46	179.01	299	83	82	72	0.050	1.001	11.996	1496
25	3.934	3.887		0.16	0.16	1.30	0.98	0.36	78	79	72	2.89	1.8	117	0.044	103	102	354.1	1.18	1.36	15.44	125.64	180.55	171.15	54.48	180.12	300	83	82	72	0.052	1.001	11.352	1428
26	4.092	4.041		0.16	0.15	1.30	0.99	0.36	79	79	72	2.89	1.8	117	0.042	105	103	353.2	0.94	1.38	14.39	126.73	181.56	172.15	54.47	181.21	301	83	82	72	0.053	1.001	11.515	1461
27	4.251	4.193		0.16	0.15	1.29	0.95	0.36	79	79	72	2.92	1.9	117	0.045	102	98	351.3	1.86	1.44	14.28	127.47	182.51	173.01	54.56	182.03	302	83	82	72	0.049	1.001	11.998	1531
28	4.410	4.347		0.16	0.15	1.30	0.97	0.36	79	79	72	2.9	1.8	96	0.045	100	97	350.1	1.24	1.38	12.94	128.06	183.05	173.51	54.62	182.68	270	80	80	72	0.036	1.001	11.516	1477
29	4.568	4.500		0.16	0.15	1.30	0.97	0.36	79	80	72	2.89	1.8	90	0.041	104	101	350.1	-0.06	1.40	14.12	128.32	183.28	173.79	54.59	182.91	249	79	79	72	0.034	1.001	11.671	1500
30	4.727	4.656		0.16	0.16	1.28	0.98	0.36	79	80	72	2.92	1.8	86	0.045	99	98	350.4	-0.28	1.38	14.17	128.32	183.37	173.91	54.76	183.07	236	78	78	72	0.032	1.001	11.512	1479
31	4.885	4.810		0.16	0.15	1.29	0.98	0.36	79	80	72	2.91	1.8	85	0.043	101	98	350.3	0.16	1.38	13.20	128.43	183.48	173.99	54.69	183.12	227	77	77	72	0.029	1.001	11.510	1480
32	5.044	4.965		0.16	0.16	1.28	0.98	0.36	79	80	72	2.9	1.7	82	0.041	103	101	350.5	-0.26	1.42	12.93	128.55	183.46	174.03	54.61	183.16	223	76	75	72	0.030	1.001	11.831	1523
33	5.203	5.120		0.16	0.16	1.29	0.98	0.36	79	80	72	2.9	1.7	80	0.044	100	97	350.0	0.52	1.36	14.22	128.43	183.29	173.84	54.58	183.01	220	75	74	72	0.030	1.001	11.346	1459
34	5.362	5.276		0.16	0.16	1.28	0.98	0.36	80	80	72	2.9	1.7	80	0.042	102	100	350.0	0.00	1.36	14.11	128.42	183.27	173.83	54.54	182.96	216	74	73	72	0.029	1.001	11.349	1459
35	5.521	5.431		0.16	0.16	1.29	0.98	0.36	80	80	72	2.9	1.7	79	0.045	98	96	350.2	-0.23	1.40	10.71	128.31	183.20	173.78	54.59	182.90	213	74	72	72	0.029	1.001	11.667	1499
36	5.681	5.587		0.16	0.16	1.30	0.98	0.36	80	80	72	2.88	1.7	79	0.040	105	103	350.1	0.13	1.40	15.42	128.31	183.15	173.75	54.56	182.87	210	73	72	72	0.028	1.001	11.671	1499
37	5.842	5.742		0.16	0.16	1.30	0.99	0.36	80	81	72	2.88	1.7	79	0.044	101	97	350.5	-0.39	1.40	15.30	128.16	182.97	173.49	54.50	182.67	206	73	72	72	0.027	1.001	11.675	1498
38	6.002	5.899		0.16	0.16	1.30	0.99	0.36	80	81	72	2.88	1.7	78	0.045	99	97	350.5	0.04	1.36	12.68	127.87	182.83	173.41	54.68	182.54	207	72	72	72	0.026	1.001	11.346	1452
39	6.162	6.054		0.16	0.16	1.30	1.00	0.36	80	81	72	2.86	1.7	77	0.043	101	98	350.4	0.07	1.38	14.13	127.88	182.77	173.39	54.62	182.49	206	71	71	72	0.025	1.001	11.510	1474
40	6.322	6.212		0.16	0.16	1.30	1.00	0.36	80	81	72	2.86	1.7	77	0.040	105	104	350.9	-0.50	1.36	10.35	127.62	182.59	173.22	54.67	182.29	205	71	71	72	0.024	1.001	11.346	1450
41	6.483	6.368		0.16	0.16	1.30	1.01	0.36	80	81	72	2.85	1.7	77	0.042	103	100	350.4	0.47	1.38	14.20	127.65	182.51	173.14	54.60	182.25	202	71	71	72	0.024	1.001	11.505	1470
42	6.644	6.526		0.16	0.16	1.31	1.01	0.36	80	81	72	2.84	1.7	77	0.042	103	101	350.6	-0.20	1.24	15.43	127.58	182.41	173.08	54.54	182.12	200	71	71	72	0.023	1.001	10.377	1325
43	6.804	6.683		0.16	0.16	1.31	1.02	0.36	81	81	72	2.85	1.7	77	0.043	101	99	351.0	-0.42	1.38	13.05	127.46	182.22	172.91	54.51	181.97	197	71	71	72	0.023	1.001	11.513	1469
44	6.965	6.841		0.16	0.16	1.31	1.01	0.36	81	81	72	2.84	1.7	76	0.046	98	97	350.2	0.80	1.38	15.40	127.26	182.14	172.77	54.56	181.82	194	71	71	72	0.022	1.001	11.512	1467
45	7.125	6.999		0.16	0.16	1.32	1.02	0.36	81	81	72	2.83	1.6	77	0.044	100	99	350.6	-0.36	1.30	12.87	126.98	181.92	172.88	54.64	181.62	192	71	72	72	0.021	1.001	10.866	1381
46	7.286	7.158		0.16	0.16	1.31	1.03	0.36	81	82	72	2.82	1.6	77	0.039	107	106	350.5	0.07	1.32	14.17	127.01	181.82	172.96	54.56	181.56	189	71	72	72	0.021	1.001	11.030	1403
47	7.447	7.318		0.16	0.16	1.31	1.03	0.36	81	82	72	2.81	1.6	76	0.041	104	103	350.8	-0.29	1.36	14.28	126.69	181.61	172.86	54.71	181.40	187	72	72	72	0.021	1.001	11.347	1439
48	7.609	7.476		0.16	0.16	1.31	1.04	0.36	81	82	72	2.82	1.6	77	0.044	101	99	350.8	0.08	1.26	15.05	126.61	181.50	172.72	54.63	181.24	184	72	72	72	0.021	1.001	10.537	1336
49	7.770	7.636		0.16	0.16	1.32	1.04	0.36	81	82	72	2.82	1.6	76	0.041	104	103	351.2	-0.41	1.36	15.48	126.51	181.41	172.66	54.63	181.14	182	71	72	72	0.021	1.001	11.348	1437

Elapsed Time	Particulate Sampling Data																	Fuel Weight, lb		Flow, gpm		Temperature Data, oF									Stack			
	Gas Meter Cubic Feet (1)	Gas Meter Cubic Feet (2)	Gas Meter Cubic Feet (amb)	Sample Rate, cfm (1)	Sample Rate, cfm (2)	Orifice dH (1)	Orifice dH (2)	Orifice dH (amb)	Meter oF (1)	Meter oF (2)	Meter oF (amb)	Meter Vac. In. Hg. (1)	Meter Vac. In. Hg. (2)	Dilution Tunnel Temp.	Dilution Tunnel dP	Pro. Rate (%) (1)	Pro. Rate (%) (2)	Scale Reading	Weight Change	Load Side Liquid Flow Rate	Boiler Side Liquid Flow Rate (optional)	Thermopile ΔT	Boiler to Heat Exch. Temp.	Heat Exch to Boiler Temp.	Inlet Load Temp.	Outlet Load Temp.	Stack	Filter (1)	Filter (2)	Ambient		Specific Heat of Inlet Water (BTU/lb-°F)	Mass Flow Rate of Inlet Water (lb/min)	Heat Output, Btu
50	7.931	7.797		0.16	0.16	1.32	1.05	0.36	81	82	72	2.81	1.6	76	0.044	100	101	351.5	-0.29	1.30	15.58	126.32	181.26	172.45	54.60	180.92	179	71	72	72	0.020	1.001	10.862	1374
51	8.093	7.956		0.16	0.16	1.32	1.05	0.36	81	82	72	2.81	1.6	76	0.043	102	100	350.7	0.78	1.36	12.03	126.21	181.12	172.36	54.63	180.84	177	71	72	72	0.019	1.001	11.349	1434
52	8.254	8.117		0.16	0.16	1.32	1.05	0.36	81	82	72	2.81	1.6	76	0.042	103	103	351.1	-0.43	1.30	13.11	125.96	180.84	172.14	54.63	180.59	175	71	72	72	0.020	1.001	10.866	1370
53	8.416	8.279		0.16	0.16	1.32	1.06	0.36	82	82	72	2.82	1.6	76	0.043	102	102	350.8	0.30	1.30	15.48	125.81	180.85	172.09	54.70	180.51	173	72	72	72	0.019	1.001	10.864	1368
54	8.578	8.440		0.16	0.16	1.32	1.05	0.36	82	82	72	2.8	1.6	76	0.042	103	103	351.0	-0.23	1.28	14.21	125.51	180.57	171.86	54.78	180.29	171	71	72	72	0.019	1.001	10.703	1345
55	8.743	8.600		0.17	0.16	1.33	1.06	0.36	82	82	72	2.79	1.6	76	0.044	102	100	351.2	-0.16	1.28	14.00	125.48	180.42	171.66	54.63	180.11	169	71	72	72	0.018	1.001	10.644	1337
56	8.905	8.762		0.16	0.16	1.32	1.06	0.36	82	82	72	2.8	1.6	76	0.046	98	99	350.8	0.43	1.30	15.47	125.35	180.23	171.49	54.62	179.97	167	71	72	72	0.018	1.001	10.863	1363
57	9.068	8.924		0.16	0.16	1.33	1.06	0.36	82	82	72	2.78	1.6	76	0.043	102	102	351.3	-0.52	1.28	14.25	125.17	180.11	171.39	54.63	179.80	165	71	72	72	0.017	1.001	10.700	1341
58	9.231	9.085		0.16	0.16	1.33	1.06	0.36	82	83	72	2.79	1.6	76	0.044	101	100	350.4	0.84	1.30	15.16	125.04	179.99	171.30	54.66	179.70	163	71	72	72	0.017	1.001	10.862	1360
59	9.393	9.246		0.16	0.16	1.34	1.06	0.36	82	83	72	2.76	1.6	76	0.044	101	100	351.2	-0.72	1.30	15.49	124.75	179.71	171.05	54.68	179.42	161	72	72	72	0.017	1.001	10.845	1355
60	9.556	9.408		0.16	0.16	1.34	1.05	0.36	82	83	72	2.76	1.6	76	0.044	101	101	350.9	0.28	1.30	15.37	124.63	179.51	170.94	54.62	179.25	160	72	72	72	0.016	1.001	10.864	1356
61	9.719	9.569		0.16	0.16	1.34	1.05	0.36	82	83	72	2.77	1.6	76	0.042	104	103	350.7	0.16	1.36	14.24	124.43	179.33	170.71	54.65	179.08	158	72	72	72	0.017	1.001	11.309	1409
62	9.881	9.730		0.16	0.16	1.35	1.06	0.36	82	83	72	2.75	1.6	76	0.046	98	98	350.8	-0.04	1.36	14.15	124.26	179.16	170.59	54.64	178.90	156	72	72	72	0.016	1.001	11.353	1412
63	10.044	9.892		0.16	0.16	1.35	1.06	0.36	82	83	72	2.77	1.6	76	0.043	102	102	351.7	-0.93	1.32	14.15	123.97	178.99	170.35	54.71	178.69	154	72	72	72	0.016	1.001	10.966	1361
64	10.207	10.054		0.16	0.16	1.34	1.06	0.36	82	83	72	2.77	1.6	76	0.043	102	102	351.4	0.28	1.29	15.40	123.89	178.80	170.20	54.62	178.52	153	72	72	72	0.015	1.001	10.735	1332
65	10.370	10.215		0.16	0.16	1.35	1.06	0.36	82	83	72	2.75	1.6	75	0.041	105	104	351.3	0.13	1.34	15.47	123.71	178.58	170.15	54.63	178.34	151	72	72	72	0.016	1.001	11.188	1386
66	10.533	10.376		0.16	0.16	1.34	1.06	0.36	82	83	72	2.76	1.6	75	0.046	99	98	350.9	0.40	1.36	15.46	123.45	178.43	169.84	54.69	178.14	150	72	72	72	0.015	1.001	11.297	1396
67	10.695	10.537		0.16	0.16	1.35	1.06	0.36	83	83	72	2.77	1.6	75	0.045	99	99	351.0	-0.13	1.31	15.49	123.30	178.21	169.67	54.63	177.93	149	72	72	72	0.015	1.001	10.959	1353
68	10.858	10.700		0.16	0.16	1.35	1.06	0.36	83	83	72	2.77	1.6	75	0.042	103	104	351.3	-0.32	1.31	15.49	123.14	178.00	169.45	54.61	177.74	147	72	72	72	0.014	1.001	10.889	1342
69	11.022	10.861		0.16	0.16	1.35	1.06	0.36	83	83	72	2.76	1.6	75	0.042	104	103	351.1	0.21	1.34	15.44	122.91	177.82	169.27	54.64	177.55	146	72	72	72	0.015	1.001	11.155	1373
70	11.185	11.022		0.16	0.16	1.35	1.06	0.36	83	83	72	2.76	1.6	75	0.047	98	97	351.1	0.02	1.32	15.52	122.66	177.60	169.09	54.67	177.33	145	72	72	72	0.014	1.001	11.029	1354
71	11.347	11.184		0.16	0.16	1.35	1.07	0.36	83	83	72	2.77	1.6	75	0.043	102	102	351.4	-0.32	1.31	15.38	122.49	177.46	168.93	54.70	177.20	144	72	72	72	0.014	1.001	10.910	1338
72	11.511	11.346		0.16	0.16	1.35	1.06	0.36	83	83	72	2.78	1.6	75	0.045	100	100	351.2	0.19	1.29	15.49	122.28	177.20	168.66	54.64	176.92	143	72	72	72	0.014	1.001	10.742	1315
73	11.674	11.507		0.16	0.16	1.35	1.06	0.36	83	83	72	2.77	1.6	75	0.046	99	98	351.4	-0.21	1.32	15.46	122.12	177.02	168.70	54.62	176.74	141	72	72	72	0.013	1.001	11.028	1348
74	11.837	11.669		0.16	0.16	1.34	1.06	0.36	83	83	72	2.77	1.6	75	0.045	100	100	351.1	0.31	1.34	15.55	121.91	176.85	168.03	54.64	176.55	141	72	72	72	0.013	1.001	11.205	1368
75	12.000	11.831		0.16	0.16	1.35	1.06	0.36	83	83	71	2.76	1.6	75	0.045	100	100	351.6	-0.45	1.34	15.42	121.66	176.56	167.81	54.68	176.34	140	72	72	71	0.013	1.001	11.191	1363
76	12.163	11.992		0.16	0.16	1.34	1.06	0.36	83	83	72	2.78	1.6	75	0.044	101	100	351.6	-0.06	1.36	14.16	121.47	176.36	167.64	54.63	176.10	138	72	72	72	0.013	1.001	11.358	1381
77	12.327	12.154		0.16	0.16	1.34	1.06	0.36	83	83	71	2.76	1.6	75	0.044	102	101	351.6	0.06	1.33	15.41	121.09	176.02	167.31	54.71	175.80	138	72	72	71	0.013	1.001	11.100	1346
78	12.489	12.315		0.16	0.16	1.35	1.06	0.36	83	83	71	2.78	1.6	75	0.045	99	99	352.1	-0.56	1.38	15.45	121.09	175.92	167.21	54.59	175.68	137	72	72	71	0.012	1.001	11.521	1397
79	12.652	12.477		0.16	0.16	1.34	1.06	0.36	83	83	71	2.76	1.6	75	0.043	102	102	351.3	0.83	1.38	15.46	120.79	175.75	166.81	54.67	175.46	136	72	72	71	0.012	1.001	11.513	1392
80	12.815	12.639		0.16	0.16	1.35	1.06	0.36	83	83	71	2.77	1.6	75	0.041	105	104	351.6	-0.26	1.38	15.38	120.65	175.44	166.51	54.49	175.14	135	72	72	71	0.012	1.001	11.520	1392
81	12.978	12.800		0.16	0.16	1.35	1.06	0.36	83	83	71	2.77	1.6	75	0.045	100	99	351.1	0.51	1.42	15.43	120.37	175.27	166.32	54.63	175.00	134	72	72	71	0.012	1.001	11.866	1430
82	13.141	12.962		0.16	0.16	1.35	1.06	0.36	83	83	71	2.76	1.6	75	0.044	101	101	351.0	0.09	1.38	15.47	120.34	175.09	166.18	54.46	174.80	133	72	72	71	0.012	1.001	11.515	1387
83	13.304	13.125		0.16	0.16	1.35	1.06	0.36	83	83	71	2.78	1.6	75	0.043	102	103	351.9	-0.93	1.32	15.38	120.00	174.81	165.92	54.53	174.53	133	72	72	71	0.011	1.001	11.043	1327
84	13.467	13.286		0.16	0.16	1.35	1.06	0.36	83	83	71	2.78	1.6	75	0.046	99	98	351.7	0.23	1.34	15.42	119.81	174.62	165.78	54.52	174.33	131	72	72	71	0.012	1.001	11.199	1343
85	13.631	13.447		0.16	0.16	1.35	1.06	0.36	83	84	71	2.78	1.6	75	0.043	103	101	351.6	0.08	1.40	15.53	119.60	174.36	165.54	54.49	174.10	130	72	72	71	0.011	1.001	11.677	1398
86	13.794	13.609		0.16	0.16	1.35	1.06	0.36	83	84	71	2.78	1.6	75	0.046	99	98	351.4	0.18	1.38	15.48	119.42	174.11	165.34	54.45	173.88	130	72	72	71	0.011	1.001	11.512	1377
87	13.957	13.771		0.16	0.16	1.35	1.07	0.36	83	84	71	2.77	1.6	75	0.043	102	102	351.5	-0.13	1.38	15.46	119.05	173.87	165.08	54.57	173.62	128	72	72	71	0.011	1.001	11.512	1372
88	14.121	13.933		0.16	0.16	1.35	1.06	0.36	83	84	71	2.77	1.6	75	0.040	107	106	351.9	-0.38	1.30	15.42	118.84	173.60	164.79	54.49	173.32	128	72	72	71	0.011	1.001	10.867	1293
89	14.284	14.095		0.16	0.16	1.35	1.06	0.36	83	84	71	2.78	1.6	75	0.043	102	102	351.7	0.25	1.34	15.54	118.57	173.39	164.64	54.57	173.14	127	72	72	71	0.011	1.001	11.191	1329
90	14.447	14.256		0.16	0.16	1.34	1.07	0.36	83	84	71	2.77	1.6	75	0.045	100	99	351.4	0.32	1.40	15.40	118.50	173.17	164.33	54.38	172.88	126	72	72	71	0.010	1.001	11.679	1386
91	14.611	14.419		0.16	0.16	1.35	1.06	0.36	83	84	71	2.77	1.6	74	0.041	105	105	351.8	-0.41	1.42	15.47	118.10	172.90	164.13	54.54	172.64	126	72	72	71	0.011	1.001	11.843	1400
92	14.774	14.581		0.16	0.16	1.34	1.06	0.36	83	84	71	2.77	1.6	75	0.046	99	98	351.4	0.39	1.40	15.47	118.05	172.76	163.98	54.43	172.48	126	72	72	71	0.011	1.001	11.681	1381
93	14.937	14.742		0.16	0.16	1.35	1.07	0.36	83	84	71	2.78	1.6	75	0.044	101	100	352.2	-0.86	1.42	15.44	117.67	172.45	163.73	54.50	172.17	125	72	72	71	0.010	1.001	11.836	1394
94	15.099	14.904		0.16	0.16	1.35	1.06	0.36	83	84	71	2.77	1.6	74	0.045	99	99	351.8	0.44	1.38	15.47	117.43	172.22	163.53	54.55	171.98	124	72	72	71	0.010	1.001	11.516	1354
95	15.262	15.066		0.16	0.16	1.35	1.06	0.36	83	84	71	2.78	1.6	74	0.045	100	99	351.7	0.08	1.42	15.52	117.27	172.04	163.28	54.43	171.71	124	72	71	71	0.010	1.001	11.835	1390
96	15.426	15.228		0.16	0.16	1.35	1.06	0.36	83	84	71	2.77	1.6	74	0.046	99	98	352.3	-0.56	1.36	15.46	117.00	171.79	163.18	54.53	171.53	123	72	71	71	0.010	1.001	11.347	1329
97	15.589	15.389		0.16	0.16	1.35	1.06	0.36	83	84	71	2.77	1.6	74	0.045	100	99	352.1	0.19	1.42	15.52	116.82	171.59	162.90	54.43	171.26	122	72	71	71	0.010	1.001	11.836	1384
98	15.752	15.551		0.16	0.16	1.34	1.05	0.36	83	84	71	2.79	1.6	85	0.041	106	105	351.6	0.47	1.36	15.43	116.48	171.26	162.68	54.58	171.06	157	72	72	71	0.031	1.001	11.352	1324
99	15.916	15.713		0.16	0.16	1.35	1.06	0.36	83	84	71	2.77	1.6	76	0.043	103	102	351.6	-0.01	1.40	15.45	116.32	171.01	162.38	54.41	170.73	156	72	71	71	0.015	1.001	11.675	1360
100	16.079	15.875		0.16	0.16	1.35	1.06	0.36	83	84	71	2.78	1.6	75	0.043	102	102	350.9	0.69	1.44	15.44	116.07	170.83	162.06	54.50	170.57	146	72	71	71	0.014	1.001	12.000	1394
101	16.243	16.036		0.16	0.16	1.35	1.06	0.36	83	84	71	2.78	1.6	75	0.044	102	100	351.6	-0.63	1.50	15.38	115.96	170.62	161.64	54.38	170.35	139	72	72	71	0.012	1.001	12.488	1450
102	16.406	16.198		0.16	0.16	1.35	1.07	0.36	83	84	71	2.79	1.6	74	0.046	99	98	351.2	0.40	1.44	15.48	115.56	170.45	161.47	54.55	170.11	134	72	72	71	0.012	1.001	12.004	1389
103	16.570	16.361		0.16	0.16	1.35	1.06	0.36	83	84	71	2.79	1.6	74	0.046	99	99	351.6	-0.45	1.50	15.54	115.46	170.21	161.29	54.48	169.94	131	72	71	71	0.011	1.001	12.487	1443
104	16.733	16.522		0.16	0.16	1.35	1.06	0.36	83	84	71	2.79	1.6	75	0.043	102	101	351.8	-0.13	1.48	15.47	115.28	169.91	160.98	54.32	169.60	128	72	71	71	0.011	1.001	12.325	1423
105	16.896	16.684		0.16	0.16	1.35	1.07	0.36	83	84	71	2.78	1.6	74	0.043	102	102	351.1	0.65	1.46	15.46	114.94	169.72	160.81	54.49	169.43	127	72	71	71	0.011	1.001	12.163	1400
106	17.059	16.845		0.16	0.16	1.35	1.06	0.36	83	84	71	2.77	1.6	74	0.043	102	101	351.5	-0.39	1.44	15.50	114.81	169.49	160.50	54.39	169.20	126	72	71	71	0.010	1.001	12.001	1380
107	17.222	17.008		0.16	0.16	1.35	1.06	0.36	83	84	71	2.77	1.6	74	0.043	102	102	351.5	0.02	1.48	15.42	114.42	169.19	160.18	54.43	168.86	125	72	71	71	0.010	1.001	12.327	1412
108	17.385	17.170		0.16	0.16	1.35	1.06	0.36	83	84	71	2.78	1.6	75	0.046	99	98	351.9	-0.42	1.42	15.44	114.24	168.92	159.99	54.38	168.62	123	72	71	71	0.009	1.001	11.839	1354
109	17.549	17.331		0.16	0.16	1.35	1.06	0.36	83	84	71	2.79	1.6	74	0.043	103	101	351.3	0.56	1.54	15.51	114.08	168.64	159.72	54.26	168.34	122	72	71	71	0.009	1.001	12.809	1463
110	17.712	17.493		0.16	0.16	1.35	1.06	0.36	83	84	71	2.78	1.6	74	0.042	103	103	351.5	-0.14	1.56	15.52	113.68	168.45	159.51	54.42	168.11	122	72	71	71	0.009	1.001	12.972	1477
111	17.876	17.656		0.16	0.16	1.36	1.07	0.36	83	84	71	2.77	1.6	74	0.041	105	105	351.3	0.21	1.48	15.47	113.61	168.19	159.32	54.29	167.90	121	71	71	71	0.009	1.001	12.322	1402

Elapsed Time	Particulate Sampling Data																	Fuel Weight, lb		Flow, gpm		Temperature Data, oF									Stack			
	Gas Meter Cubic Feet (1)	Gas Meter Cubic Feet (2)	Gas Meter Cubic Feet (amb)	Sample Rate, cfm (1)	Sample Rate, cfm (2)	Orifice dH (1)	Orifice dH (2)	Orifice dH (amb)	Meter oF (1)	Meter oF (2)	Meter oF (amb)	Meter Vac. In. Hg. (1)	Meter Vac. In. Hg. (2)	Dilution Tunnel Temp.	Dilution Tunnel dP	Pro. Rate (%) (1)	Pro. Rate (%) (2)	Scale Reading	Weight Change	Load Side Liquid Flow Rate	Boiler Side Liquid Flow Rate (optional)	Thermopile ΔT	Boiler to Heat Exch. Temp.	Heat Exch to Boiler Temp.	Inlet Load Temp.	Outlet Load Temp.	Stack	Filter (1)	Filter (2)	Ambient		Specific Heat of Inlet Water (BTU/lb-°F)	Mass Flow Rate of Inlet Water (lb/min)	Heat Output, Btu
112	18.039	17.818		0.16	0.16	1.35	1.06	0.36	83	84	71	2.77	1.6	75	0.046	99	98	351.0	0.27	1.50	15.47	113.29	167.96	159.14	54.38	167.67	120	71	71	71	0.009	1.001	12.483	1416
113	18.202	17.979		0.16	0.16	1.35	1.07	0.36	83	84	71	2.78	1.6	74	0.045	100	99	351.4	-0.40	1.46	15.53	113.00	167.68	158.79	54.35	167.35	120	71	71	71	0.008	1.001	12.162	1376
114	18.366	18.141		0.16	0.16	1.36	1.06	0.36	83	84	71	2.79	1.6	74	0.046	99	98	352.3	-0.87	1.44	15.37	112.68	167.37	158.52	54.37	167.06	120	71	71	71	0.009	1.001	12.034	1358
115	18.530	18.304		0.16	0.16	1.35	1.06	0.36	83	84	71	2.78	1.6	74	0.043	103	102	351.3	0.97	1.44	15.43	112.55	167.07	158.34	54.30	166.84	118	71	71	71	0.008	1.001	12.001	1352
116	18.693	18.465		0.16	0.16	1.36	1.06	0.36	83	84	71	2.78	1.6	74	0.044	101	100	351.7	-0.38	1.52	15.50	112.26	166.83	158.09	54.30	166.56	118	71	71	71	0.008	1.001	12.647	1421
117	18.857	18.627		0.16	0.16	1.35	1.06	0.36	83	84	71	2.78	1.6	74	0.045	100	99	351.2	0.48	1.52	15.53	112.20	166.70	157.74	54.18	166.38	118	71	71	71	0.008	1.001	12.652	1421
118	19.020	18.789		0.16	0.16	1.34	1.06	0.36	83	84	71	2.78	1.6	74	0.044	101	101	351.2	0.01	1.52	15.45	111.77	166.41	157.43	54.35	166.11	117	71	71	71	0.008	1.001	12.652	1416
119	19.183	18.951		0.16	0.16	1.35	1.07	0.36	83	84	71	2.78	1.6	74	0.044	101	101	351.7	-0.55	1.52	15.48	111.52	166.17	157.29	54.33	165.86	116	71	71	71	0.008	1.001	12.654	1413
120	19.346	19.113		0.16	0.16	1.35	1.07	0.36	83	84	71	2.78	1.6	74	0.044	101	101	351.2	0.57	1.53	15.53	111.17	165.77	156.91	54.30	165.47	115	71	71	71	0.008	1.001	12.777	1422
121	19.509	19.275		0.16	0.16	1.35	1.06	0.36	83	84	71	2.78	1.6	75	0.046	99	98	351.7	-0.54	1.46	15.41	111.20	165.61	156.79	54.16	165.36	115	71	71	71	0.008	1.001	12.163	1354
122	19.673	19.437		0.16	0.16	1.36	1.07	0.36	83	84	71	2.77	1.6	74	0.041	105	104	351.1	0.61	1.48	15.51	110.64	165.35	156.46	54.38	165.02	114	71	71	71	0.008	1.001	12.326	1365
123	19.836	19.599		0.16	0.16	1.35	1.06	0.36	83	84	71	2.79	1.6	74	0.045	100	99	351.2	-0.09	1.53	15.45	110.45	165.09	156.31	54.34	164.79	114	71	71	71	0.008	1.001	12.782	1413
124	20.000	19.761		0.16	0.16	1.36	1.06	0.36	83	84	71	2.79	1.6	74	0.043	103	102	352.0	-0.87	1.43	15.48	110.36	164.85	156.07	54.22	164.58	115	71	71	71	0.008	1.001	11.941	1319
125	20.163	19.922		0.16	0.16	1.35	1.07	0.36	83	84	71	2.78	1.6	74	0.041	104	104	351.6	0.45	1.50	15.54	110.00	164.59	155.81	54.29	164.29	114	71	71	71	0.008	1.001	12.484	1375
126	20.326	20.084		0.16	0.16	1.36	1.07	0.36	83	84	71	2.77	1.6	74	0.046	99	98	351.6	0.04	1.47	15.53	109.86	164.38	156.02	54.22	164.08	113	71	71	71	0.008	1.001	12.291	1352
127	20.490	20.247		0.16	0.16	1.36	1.07	0.36	83	84	71	2.79	1.6	74	0.044	101	101	351.4	0.16	1.63	15.46	109.55	164.08	154.82	54.23	163.78	113	71	71	71	0.008	1.001	13.605	1492
128	20.654	20.409		0.16	0.16	1.36	1.07	0.36	83	84	71	2.79	1.6	74	0.044	101	101	351.3	0.13	1.56	15.55	109.19	163.71	154.40	54.20	163.39	112	71	71	71	0.007	1.001	13.003	1422
129	20.817	20.570		0.16	0.16	1.34	1.05	0.36	83	84	70	2.8	1.6	84	0.045	101	100	350.9	0.37	1.56	15.45	108.93	163.43	154.20	54.20	163.14	151	72	72	70	0.028	1.001	12.973	1415
130	20.981	20.732		0.16	0.16	1.36	1.07	0.36	83	84	70	2.78	1.6	75	0.045	100	100	351.0	-0.10	1.59	15.50	108.74	163.23	154.01	54.17	162.92	146	71	71	70	0.012	1.001	13.294	1447
131	21.144	20.895		0.16	0.16	1.35	1.07	0.36	83	83	70	2.79	1.6	74	0.045	100	100	351.3	-0.27	1.58	15.52	108.46	162.96	153.73	54.20	162.65	137	71	71	70	0.011	1.001	13.132	1426
132	21.307	21.056		0.16	0.16	1.35	1.06	0.36	83	83	70	2.78	1.6	74	0.044	101	100	350.7	0.51	1.56	15.44	108.19	162.67	153.50	54.15	162.34	131	71	71	70	0.010	1.001	12.973	1405
133	21.470	21.218		0.16	0.16	1.35	1.07	0.36	83	84	71	2.78	1.6	74	0.045	100	99	350.6	0.13	1.61	15.45	108.03	162.50	153.31	54.12	162.16	127	71	71	71	0.009	1.001	13.458	1456
134	21.634	21.380		0.16	0.16	1.35	1.07	0.36	83	84	71	2.78	1.6	74	0.044	101	101	350.6	-0.03	1.52	15.50	107.88	162.27	153.16	54.06	161.94	124	71	71	71	0.009	1.001	12.650	1366
135	21.797	21.542		0.16	0.16	1.35	1.07	0.36	83	83	70	2.79	1.6	74	0.045	100	100	351.1	-0.48	1.56	15.42	107.50	161.88	152.82	54.10	161.60	123	71	71	70	0.009	1.001	12.975	1396
136	21.960	21.705		0.16	0.16	1.36	1.07	0.36	83	83	70	2.78	1.6	74	0.043	102	103	351.0	0.08	1.54	15.56	107.32	161.75	152.59	54.06	161.38	121	71	71	70	0.009	1.001	12.815	1377
137	22.120	21.866		0.16	0.16	1.35	1.07	0.36	83	83	70	2.79	1.6	74	0.045	98	99	351.2	-0.12	1.54	15.43	107.05	161.40	152.35	54.03	161.08	119	71	71	70	0.008	1.001	12.810	1373
138	22.281	22.028		0.16	0.16	1.36	1.07	0.36	83	83	70	2.78	1.6	74	0.044	100	101	351.0	0.17	0.43	15.45	106.93	161.21	157.97	54.07	161.00	118	71	71	70	0.008	1.001	3.592	385
139	22.442	22.191		0.16	0.16	1.36	1.07	0.36	83	83	70	2.78	1.6	74	0.046	97	99	349.5	1.48	0.41	15.54	106.96	161.86	160.34	54.31	161.27	117	71	71	70	0.008	1.001	3.429	367
140	22.602	22.351		0.16	0.16	1.24	0.99	0.36	83	83	70	2.65	1.5	74	0.043	100	101	351.5	-1.94	0.35	15.49	107.24	162.20	160.73	54.47	161.70	115	71	71	70	0.008	1.001	2.945	316
141	22.762	22.507		0.16	0.16	1.30	0.99	0.36	83	83	70	2.72	1.5	74	0.046	97	95	351.3	0.18	0.35	15.55	106.90	162.02	160.59	54.71	161.61	114	71	71	70	0.008	1.001	2.945	315
142	22.923	22.664		0.16	0.16	1.31	0.99	0.36	83	83	70	2.73	1.5	74	0.045	99	97	350.4	0.87	0.37	15.44	106.34	162.02	160.56	55.21	161.55	113	71	71	70	0.007	1.001	3.103	330
143	23.084	22.820		0.16	0.16	1.31	0.99	0.36	83	83	70	2.73	1.5	74	0.044	100	97	351.2	-0.79	1.15	15.45	105.52	161.86	155.45	56.13	161.65	113	71	71	70	0.007	1.001	9.579	1012
144	23.244	22.978		0.16	0.16	1.30	0.99	0.36	83	83	70	2.72	1.5	74	0.048	95	94	351.1	0.12	1.23	15.41	104.73	161.03	154.40	56.11	160.84	112	71	71	70	0.007	1.001	10.222	1072
145	23.405	23.133		0.16	0.15	1.30	0.99	0.36	83	83	70	2.72	1.5	74	0.045	99	95	351.2	-0.09	1.23	15.49	105.05	160.66	153.82	55.41	160.46	112	71	71	70	0.007	1.001	10.225	1075
146	23.566	23.291		0.16	0.16	1.31	0.99	0.36	83	83	70	2.72	1.5	74	0.044	100	98	351.0	0.19	1.52	15.50	105.23	160.67	152.71	55.24	160.46	112	71	71	70	0.007	1.001	12.646	1332
147	23.726	23.447		0.16	0.16	1.31	0.99	0.36	83	83	70	2.73	1.5	74	0.043	100	98	351.2	-0.27	0.47	15.47	104.72	160.59	158.57	55.39	160.11	111	71	71	70	0.007	1.001	3.910	410
148	23.886	23.604		0.16	0.16	1.30	0.99	0.36	83	83	70	2.73	1.5	74	0.046	97	95	351.3	-0.03	0.47	15.46	105.28	161.24	159.41	55.46	160.74	111	71	71	70	0.007	1.001	3.914	413
149	24.046	23.760		0.16	0.16	1.30	0.99	0.36	83	83	70	2.72	1.5	74	0.041	103	101	351.4	-0.11	1.40	15.52	105.09	161.00	153.45	55.78	160.87	111	71	71	70	0.007	1.001	11.675	1228
150	24.206	23.917		0.16	0.16	1.31	0.99	0.36	83	83	70	2.73	1.5	74	0.040	104	102	351.0	0.36	1.38	15.48	104.17	159.98	152.33	55.58	159.75	109	71	71	70	0.006	1.001	11.517	1201
151	24.366	24.073		0.16	0.16	1.31	0.99	0.36	83	83	70	2.73	1.5	74	0.044	99	97	351.4	-0.38	1.38	15.38	104.47	159.77	152.11	55.06	159.54	108	71	71	70	0.007	1.001	11.517	1205
152	24.526	24.229		0.16	0.16	1.31	0.99	0.36	83	83	70	2.73	1.5	75	0.044	99	97	351.4	-0.02	1.50	15.37	104.66	159.60	151.30	54.77	159.43	119	71	71	70	0.022	1.001	12.487	1309
153	24.686	24.385		0.16	0.16	1.30	0.98	0.36	83	83	70	2.75	1.5	86	0.043	101	99	349.7	1.74	1.56	15.62	104.46	159.30	150.97	54.64	159.10	167	71	71	70	0.030	1.001	12.970	1356
154	24.845	24.541		0.16	0.16	1.30	0.99	0.36	83	83	70	2.75	1.5	91	0.044	100	99	349.1	0.61	1.48	15.56	104.64	159.47	151.01	54.53	159.17	204	72	71	70	0.036	1.001	12.327	1291
155	25.005	24.696		0.16	0.16	1.31	0.99	0.36	83	83	70	2.75	1.5	96	0.045	100	97	348.1	0.99	1.89	15.49	105.28	159.91	149.75	54.28	159.56	231	72	72	70	0.042	1.001	15.721	1657
156	25.164	24.852		0.16	0.16	1.31	0.99	0.36	83	83	70	2.75	1.5	100	0.041	104	103	345.7	2.42	1.73	15.49	105.75	160.17	150.55	54.08	159.83	247	72	72	70	0.038	1.001	14.426	1527
157	25.323	25.007		0.16	0.16	1.31	0.99	0.36	83	83	70	2.75	1.5	103	0.042	103	101	344.9	0.72	1.67	15.45	106.23	160.71	151.09	54.18	160.41	257	73	72	70	0.038	1.001	13.943	1483
158	25.483	25.163		0.16	0.16	1.31	0.99	0.36	83	83	70	2.75	1.5	106	0.043	103	101	343.8	1.13	1.65	15.39	107.17	161.55	151.88	54.02	161.19	266	73	73	70	0.042	1.001	13.783	1479
159	25.643	25.317		0.16	0.15	1.31	0.98	0.36	83	83	70	2.75	1.5	108	0.043	103	100	342.8	1.04	1.61	15.43	107.84	162.15	152.42	53.98	161.82	274	74	73	70	0.044	1.001	13.459	1453
160	25.802	25.472		0.16	0.16	1.30	0.97	0.36	83	83	70	2.77	1.6	110	0.041	105	103	341.7	1.05	1.69	15.52	108.70	163.00	153.08	53.93	162.62	280	75	74	70	0.049	1.001	14.106	1535
161	25.961	25.625		0.16	0.15	1.31	0.97	0.36	83	83	70	2.77	1.6	112	0.042	104	101	339.3	2.44	1.71	15.41	109.49	163.84	153.85	53.94	163.43	286	76	75	70	0.045	1.001	14.267	1564
162	26.119	25.780		0.16	0.16	1.30	0.97	0.36	83	83	70	2.78	1.6	113	0.044	101	100	337.8	1.47	1.61	15.45	110.34	164.73	154.58	53.94	164.27	290	77	76	70	0.049	1.001	13.452	1486
163	26.278	25.933		0.16	0.15	1.30	0.97	0.36	83	83	70	2.79	1.6	111	0.044	102	98	336.4	1.37	1.59	15.49	111.31	165.61	155.46	53.92	165.23	288	78	76	70	0.046	1.001	13.295	1482
164	26.435	26.086		0.16	0.15	1.30	0.96	0.36	83	83	70	2.78	1.6	112	0.044	101	98	334.3	2.13	1.56	15.52	112.16	166.49	156.29	53.94	166.10	290	78	77	70	0.045	1.001	12.974	1457
165	26.594	26.241		0.16	0.16	1.29	0.96	0.36	83	83	70	2.8	1.6	112	0.044	102	100	333.8	0.51	1.67	15.51	113.06	167.40	157.04	53.91	166.97	289	79	77	70	0.046	1.001	13.940	1578
166	26.752	26.393		0.16	0.15	1.29	0.96	0.36	83	83	70	2.79	1.6	111	0.038	109	105	332.2	1.65	1.65	15.48	113.97	168.27	157.97	53.92	167.89	288	80	78	70	0.045	1.001	13.779	1572
167	26.910	26.546		0.16	0.15	1.29	0.95	0.36	83	83	70	2.82	1.6	111	0.047	98	95	330.6	1.60	1.62	15.49	114.92	169.26	158.81	53.92	168.83	287	80	78	70	0.049	1.001	13.477	1551
168	27.067	26.698		0.16	0.15	1.29	1.01	0.36	83	83	70	2.81	1.7	112	0.040	105	103	329.0	1.60	1.69	15.49	115.90	170.25	159.78	53.96	169.86	291	81	79	70	0.044	1.001	14.107	1637
169	27.224	26.855		0.16	0.16	1.28	1.01	0.36	83	83	70	2.84	1.7	113	0.044	101	101	326.7	2.25	1.69	15.53	116.90	171.34	160.68	53.94	170.84	292	81	79	70	0.048	1.001	14.102	1650
170	27.381	27.012		0.16	0.16	1.28	1.01	0.36	83	83	70	2.84	1.7	113	0.044	101	101	325.6	1.07	1.61	15.46	117.90	172.25	161.59	53.94	171.84	294	81	79	70	0.048	1.001	13.386	1580
171	27.538	27.169		0.16	0.16	1.27	1.00	0.36	83	83	70	2.85	1.7	114	0.041	104	105	324.8	0.87	1.60	15.45	118.75	173.07	162.28	53.90	172.66	294	82	80	70	0.047	1.001	13.363	1589
172	27.696	27.325		0.16	0.16	1.26	1.00	0.36	83	83	70	2.86	1.7	114	0.044	101	101	322.9	1.87	1.62	15.45	119.42	173.76	162.99	53.94	173.36	296	82	80	70	0.045	1.001	13.485	1612
173	27.852	27.482		0.16	0.16	1.27	1.00	0.36	83	83	70	2.86	1.7	116	0.044	100	101	321.1	1.75	1.63	15.43	120.57	174.94	164.00	53.93	174.50	301	83	81	70	0.054	1.001	13.575	1639

Elapsed Time	Particulate Sampling Data																	Fuel Weight, lb		Flow, gpm		Temperature Data, oF									Stack			
	Gas Meter Cubic Feet (1)	Gas Meter Cubic Feet (2)	Gas Meter Cubic Feet (amb)	Sample Rate, cfm (1)	Sample Rate, cfm (2)	Orifice dH (1)	Orifice dH (2)	Orifice dH (amb)	Meter oF (1)	Meter oF (2)	Meter oF (amb)	Meter Vac. In. Hg. (1)	Meter Vac. In. Hg. (2)	Dilution Tunnel Temp.	Dilution Tunnel dP	Pro. Rate (%) (1)	Pro. Rate (%) (2)	Scale Reading	Weight Change	Load Side Liquid Flow Rate	Boiler Side Liquid Flow Rate (optional)	Thermopile ΔT	Boiler to Heat Exch. Temp.	Heat Exch to Boiler Temp.	Inlet Load Temp.	Outlet Load Temp.	Stack	Filter (1)	Filter (2)	Ambient		Specific Heat of Inlet Water (BTU/lb-°F)	Mass Flow Rate of Inlet Water (lb/min)	Heat Output, Btu
174	28.009	27.637		0.16	0.16	1.27	1.00	0.36	83	83	70	2.86	1.8	116	0.039	107	106	319.8	1.36	1.69	15.41	121.68	176.04	165.03	53.92	175.61	302	83	81	70	0.045	1.001	14.107	1719
175	28.165	27.793		0.16	0.16	1.27	0.99	0.36	83	83	70	2.86	1.8	117	0.042	103	103	318.4	1.43	1.63	15.45	122.80	177.11	165.97	53.86	176.66	303	83	81	70	0.051	1.001	13.572	1669
176	28.321	27.947		0.16	0.15	1.26	0.98	0.36	83	83	70	2.88	1.8	118	0.045	99	99	316.7	1.67	1.60	15.52	123.87	178.15	167.02	53.88	177.75	306	84	81	70	0.052	1.001	13.304	1650
177	28.478	28.102		0.16	0.16	1.25	0.98	0.36	83	83	70	2.9	1.8	118	0.041	105	104	315.5	1.21	1.59	15.53	124.98	179.30	168.05	53.90	178.88	307	84	82	70	0.053	1.001	13.271	1661
178	28.633	28.257		0.15	0.16	1.26	0.99	0.36	83	83	70	2.91	1.8	118	0.042	102	103	313.1	2.39	1.59	15.47	126.16	180.47	169.22	53.87	180.03	308	84	82	70	0.054	1.001	13.291	1679
179	28.790	28.410		0.16	0.15	1.25	0.92	0.36	83	83	70	2.91	1.9	119	0.043	102	100	312.0	1.07	1.63	15.42	127.13	181.44	170.10	53.88	181.01	309	84	82	70	0.048	1.001	13.621	1734
180	28.950	28.562		0.16	0.15	1.25	0.96	0.36	83	83	70	2.92	1.8	118	0.043	104	99	310.7	1.31	1.59	15.37	128.21	182.49	171.07	53.85	182.05	308	84	82	70	0.051	1.001	13.291	1706
181	29.111	28.713		0.16	0.15	1.25	0.94	0.36	83	83	70	2.91	1.9	108	0.045	102	96	309.2	1.51	1.57	11.54	129.23	183.50	171.99	53.88	183.11	298	83	82	70	0.038	1.001	13.132	1699
182	29.273	28.865		0.16	0.15	1.25	0.96	0.36	83	83	70	2.9	1.8	92	0.046	100	94	308.4	0.82	1.67	14.19	129.58	183.80	172.37	53.87	183.45	265	81	80	70	0.038	1.001	13.936	1808
183	29.435	29.019		0.16	0.15	1.32	0.96	0.36	83	83	70	2.99	1.8	88	0.042	104	99	308.3	0.09	1.59	14.15	129.75	183.99	172.59	53.88	183.63	248	79	79	70	0.036	1.001	13.293	1727
184	29.598	29.172		0.16	0.15	1.32	0.96	0.36	83	83	70	2.98	1.8	85	0.041	106	100	307.5	0.81	1.58	15.43	129.91	184.10	172.68	53.86	183.77	236	78	78	70	0.035	1.001	13.138	1709
185	29.760	29.325		0.16	0.15	1.33	0.95	0.36	83	83	70	2.94	1.8	85	0.043	102	97	307.8	-0.30	1.63	12.83	130.03	184.15	172.75	53.85	183.89	229	77	77	70	0.032	1.001	13.615	1772
186	29.920	29.479		0.16	0.15	1.33	0.96	0.36	83	83	70	2.91	1.8	80	0.046	97	94	306.9	0.86	1.63	15.40	129.97	184.15	172.68	53.86	183.83	225	75	76	70	0.034	1.001	13.616	1772
187	30.079	29.632		0.16	0.15	1.34	0.96	0.36	83	83	70	2.92	1.8	79	0.046	97	93	306.7	0.23	1.61	15.35	129.84	184.00	172.67	53.86	183.70	220	76	75	70	0.033	1.001	13.454	1749
188	30.239	29.787		0.16	0.15	1.34	0.97	0.36	83	83	70	2.9	1.8	78	0.044	99	97	306.8	-0.08	1.58	14.15	129.87	184.01	172.61	53.85	183.72	216	75	74	70	0.032	1.001	13.132	1708
189	30.399	29.941		0.16	0.15	1.34	0.97	0.36	83	83	70	2.9	1.8	78	0.043	101	97	307.4	-0.60	1.56	13.97	129.78	183.98	172.58	53.86	183.63	213	75	73	70	0.031	1.001	12.972	1685
190	30.559	30.095		0.16	0.15	1.29	0.97	0.36	83	83	70	2.85	1.8	77	0.042	102	98	307.3	0.12	1.61	14.29	129.59	183.81	172.39	53.88	183.47	210	74	72	70	0.030	1.001	13.460	1746
191	30.719	30.249		0.16	0.15	1.30	0.97	0.36	83	83	70	2.84	1.8	76	0.045	98	95	307.4	-0.14	1.58	14.12	129.58	183.74	172.33	53.82	183.40	208	73	71	70	0.029	1.001	13.134	1704
192	30.879	30.404		0.16	0.16	1.30	0.97	0.36	83	83	70	2.84	1.8	75	0.043	100	98	306.5	0.86	1.59	13.14	129.40	183.64	172.23	53.88	183.28	209	72	70	70	0.027	1.001	13.293	1722
193	31.039	30.558		0.16	0.15	1.29	0.97	0.36	83	83	70	2.83	1.8	75	0.044	99	96	307.5	-0.97	1.59	14.23	129.51	183.59	172.34	53.83	183.34	208	72	70	70	0.027	1.001	13.291	1723
194	31.199	30.713		0.16	0.16	1.30	0.97	0.36	83	83	70	2.84	1.8	75	0.044	99	96	307.2	0.33	1.58	15.45	129.31	183.43	172.13	53.83	183.14	206	71	70	70	0.027	1.001	13.133	1700
195	31.359	30.868		0.16	0.15	1.30	0.97	0.36	83	83	70	2.83	1.8	75	0.044	99	96	307.5	-0.35	1.63	14.16	129.15	183.23	172.03	53.84	183.00	203	70	69	70	0.026	1.001	13.616	1761
196	31.519	31.022		0.16	0.15	1.30	0.98	0.36	83	83	70	2.83	1.8	75	0.043	100	97	307.3	0.20	1.59	13.57	129.02	183.14	171.85	53.82	182.84	201	70	69	70	0.025	1.001	13.294	1717
197	31.679	31.178		0.16	0.16	1.30	0.98	0.36	83	83	70	2.82	1.8	75	0.044	99	97	307.1	0.19	1.65	14.14	128.83	182.98	171.67	53.82	182.65	198	70	69	70	0.025	1.001	13.777	1777
198	31.840	31.333		0.16	0.15	1.30	0.99	0.36	83	83	70	2.81	1.7	74	0.043	101	98	307.8	-0.67	1.67	15.41	128.62	182.76	171.43	53.83	182.45	195	70	69	70	0.024	1.001	13.943	1796
199	32.001	31.491		0.16	0.16	1.31	0.99	0.36	83	83	70	2.8	1.7	75	0.044	100	98	307.4	0.47	1.54	12.88	128.63	182.71	171.42	53.76	182.40	193	70	69	70	0.024	1.001	12.810	1650
200	32.161	31.647		0.16	0.16	1.31	1.01	0.36	83	83	70	2.81	1.7	75	0.041	103	101	307.8	-0.44	1.58	15.36	128.22	182.42	171.09	53.87	182.09	190	70	69	70	0.023	1.001	13.180	1692
201	32.322	31.806		0.16	0.16	1.30	1.01	0.36	83	83	70	2.8	1.7	74	0.042	102	101	307.4	0.36	1.61	14.11	128.07	182.20	170.88	53.82	181.89	187	70	69	70	0.023	1.001	13.464	1726
202	32.483	31.964		0.16	0.16	1.31	1.02	0.36	83	83	70	2.79	1.7	75	0.045	99	97	307.1	0.37	1.60	15.42	127.91	182.02	170.76	53.80	181.71	185	70	70	70	0.023	1.001	13.304	1704
203	32.644	32.122		0.16	0.16	1.31	1.03	0.36	83	83	70	2.78	1.6	74	0.045	99	97	307.5	-0.48	1.61	15.44	127.78	181.91	170.62	53.84	181.61	182	70	70	70	0.022	1.001	13.420	1717
204	32.805	32.283		0.16	0.16	1.31	1.04	0.36	83	83	70	2.8	1.6	74	0.044	100	100	307.6	-0.02	1.65	15.25	127.44	181.54	170.34	53.78	181.22	180	70	70	70	0.022	1.001	13.784	1759
205	32.966	32.442		0.16	0.16	1.32	1.04	0.36	83	83	70	2.77	1.6	74	0.043	101	100	307.3	0.30	1.58	15.41	127.39	181.46	170.23	53.80	181.19	177	70	70	70	0.021	1.001	13.140	1676
206	33.128	32.603		0.16	0.16	1.32	1.05	0.36	83	83	70	2.78	1.6	74	0.045	99	99	307.1	0.18	1.67	15.50	127.08	181.16	170.01	53.80	180.88	175	70	70	70	0.021	1.001	13.915	1770
207	33.290	32.764		0.16	0.16	1.32	1.05	0.36	83	83	70	2.78	1.6	74	0.043	101	101	307.3	-0.18	1.63	14.18	126.95	180.98	169.81	53.78	180.74	173	70	70	70	0.020	1.001	13.621	1731
208	33.451	32.926		0.16	0.16	1.32	1.06	0.36	83	83	70	2.77	1.6	74	0.044	100	101	307.3	-0.03	1.61	15.47	126.85	180.88	169.74	53.77	180.62	171	70	70	70	0.020	1.001	13.447	1708
209	33.613	33.086		0.16	0.16	1.32	1.06	0.36	83	83	70	2.75	1.6	74	0.046	98	97	307.5	-0.23	1.61	15.42	126.52	180.65	169.49	53.82	180.33	169	70	70	70	0.019	1.001	13.457	1705
210	33.774	33.248		0.16	0.16	1.33	1.06	0.36	83	83	70	2.76	1.6	74	0.045	99	100	308.2	-0.65	1.60	15.43	126.28	180.45	169.20	53.80	180.08	167	70	70	70	0.019	1.001	13.301	1682
211	33.936	33.411		0.16	0.16	1.33	1.06	0.36	83	83	70	2.76	1.6	74	0.046	98	99	307.8	0.37	1.61	15.52	126.09	180.21	169.09	53.80	179.89	165	70	70	70	0.018	1.001	13.461	1699
212	34.098	33.572		0.16	0.16	1.33	1.06	0.36	83	83	70	2.76	1.6	74	0.044	100	100	307.9	-0.12	1.65	15.47	125.72	179.78	168.74	53.79	179.51	163	70	70	70	0.018	1.001	13.780	1735
213	34.259	33.733		0.16	0.16	1.33	1.07	0.36	83	83	70	2.76	1.6	74	0.045	99	99	307.3	0.62	1.44	14.17	125.60	179.62	169.07	53.76	179.36	161	70	70	70	0.018	1.001	11.996	1509
214	34.421	33.895		0.16	0.16	1.33	1.07	0.36	83	83	70	2.75	1.6	74	0.042	103	103	307.7	-0.45	1.32	14.23	125.33	179.53	170.55	53.90	179.22	160	70	70	70	0.017	1.001	11.036	1385
215	34.583	34.057		0.16	0.16	1.32	1.06	0.36	83	83	70	2.76	1.6	74	0.043	101	102	308.0	-0.25	1.33	15.50	125.23	179.47	170.49	53.90	179.13	158	70	70	70	0.017	1.001	11.048	1385
216	34.744	34.217		0.16	0.16	1.33	1.05	0.36	83	83	70	2.75	1.6	74	0.045	99	98	307.6	0.39	1.30	15.41	125.11	179.30	170.45	53.95	179.05	156	70	70	70	0.017	1.001	10.880	1363
217	34.906	34.378		0.16	0.16	1.33	1.06	0.36	83	83	70	2.76	1.6	74	0.042	103	102	308.6	-0.98	1.38	15.55	124.81	179.07	170.21	54.01	178.83	154	70	70	70	0.017	1.001	11.522	1440
218	35.068	34.540		0.16	0.16	1.33	1.06	0.36	83	83	70	2.75	1.6	74	0.044	100	101	307.8	0.73	1.30	15.46	124.68	178.91	170.04	54.00	178.67	153	70	70	70	0.016	1.001	10.876	1358
219	35.229	34.702		0.16	0.16	1.33	1.06	0.36	83	83	70	2.74	1.6	74	0.044	100	101	307.8	0.00	1.34	15.46	124.36	178.76	169.82	54.10	178.45	152	70	70	70	0.016	1.001	11.200	1395
220	35.391	34.863		0.16	0.16	1.33	1.06	0.36	83	83	70	2.75	1.5	74	0.045	99	99	307.6	0.27	1.40	14.54	124.06	178.48	169.61	54.17	178.22	150	70	70	70	0.016	1.001	11.683	1451
221	35.553	35.024		0.16	0.16	1.33	1.06	0.36	83	83	70	2.75	1.6	74	0.045	99	99	307.9	-0.33	1.36	15.52	124.04	178.37	169.51	54.06	178.10	149	70	70	70	0.016	1.001	11.359	1411
222	35.715	35.186		0.16	0.16	1.33	1.06	0.36	83	83	70	2.76	1.6	74	0.041	104	104	308.6	-0.71	1.28	15.45	123.78	178.24	169.36	54.14	177.93	148	70	70	70	0.016	1.001	10.710	1327
223	35.876	35.347		0.16	0.16	1.33	1.06	0.36	83	83	70	2.75	1.6	74	0.043	101	101	307.6	0.96	1.30	15.51	123.51	177.95	169.12	54.19	177.71	147	70	70	70	0.015	1.001	10.876	1345
224	36.038	35.508		0.16	0.16	1.34	1.06	0.36	83	83	70	2.76	1.6	74	0.043	101	101	308.0	-0.37	1.32	15.44	123.36	177.82	169.01	54.20	177.55	145	70	70	70	0.015	1.001	11.039	1363
225	36.200	35.670		0.16	0.16	1.33	1.06	0.36	83	83	70	2.75	1.6	74	0.046	98	99	307.9	0.13	1.36	15.57	123.08	177.58	168.80	54.23	177.31	143	70	70	70	0.014	1.001	11.356	1399
226	36.362	35.832		0.16	0.16	1.33	1.06	0.36	83	83	70	2.76	1.6	74	0.042	103	103	307.8	0.07	1.34	15.49	122.84	177.30	168.52	54.23	177.07	141	70	70	70	0.014	1.001	11.202	1378
227	36.523	35.993		0.16	0.16	1.33	1.05	0.36	83	83	70	2.75	1.6	74	0.044	100	100	308.1	-0.30	1.34	15.42	122.71	177.18	168.43	54.20	176.90	141	70	70	70	0.014	1.001	11.197	1376
228	36.685	36.154		0.16	0.16	1.33	1.06	0.36	83	83	70	2.75	1.6	74	0.044	100	100	307.8	0.30	1.40	15.48	122.54	176.94	167.72	54.13	176.67	140	70	70	70	0.014	1.001	11.687	1434
229	36.847	36.316		0.16	0.16	1.33	1.06	0.36	83	83	70	2.75	1.6	74	0.046	98	99	308.4	-0.58	1.42	15.51	122.34	176.65	167.17	54.07	176.41	139	70	70	70	0.014	1.001	11.845	1451
230	37.008	36.478		0.16	0.16	1.33	1.06	0.36	83	83	70	2.76	1.6	73	0.044	100	101	308.1	0.33	1.48	15.43	122.08	176.46	166.98	54.08	176.16	138	70	70	70	0.013	1.001	12.334	1508
231	37.170	36.639		0.16	0.16	1.33	1.06	0.36	83	83	70	2.75	1.6	74	0.044	100	100	307.9	0.18	1.48	15.44	121.84	176.18	166.60	54.12	175.95	137	70	70	70	0.013	1.001	12.333	1504
232	37.332	36.800		0.16	0.16	1.33	1.06	0.36	83	83	70	2.76	1.6	73	0.043	101	101	308.0	-0.09	1.46	15.45	121.49	175.91	166.38	54.16	175.66	136	70	70	70	0.013	1.001	12.167	1480
233	37.494	36.962		0.16	0.16	1.33	1.06	0.36	83	83	70	2.75	1.5	73	0.045	99	100	308.5	-0.52	1.46	15.39	121.45	175.75	166.20	54.06	175.51	135	70	70	70	0.013	1.001	12.167	1479
234	37.656	37.124		0.16	0.16	1.33	1.06	0.36	83	83	70	2.74	1.6	73	0.045	99	100	307.9	0.55	1.44	15.45	121.09	175.52	166.03	54.19	175.28	134	70	70	70	0.013	1.001	12.015	1457
235	37.817	37.285		0.16	0.16	1.33	1.06	0.36	83	83	70	2.75	1.6	73	0.047	96	97	308.3	-0.31	1.48	15.48	120.96	175.23	165.75	54.04	175.00	133	70	70	70	0.012	1.001	12.336	1494

Elapsed Time	Particulate Sampling Data																	Fuel Weight, lb		Flow, gpm		Temperature Data, oF								Stack			
	Gas Meter Cubic Feet (1)	Gas Meter Cubic Feet (2)	Gas Meter Cubic Feet (amb)	Sample Rate, cfm (1)	Sample Rate, cfm (2)	Orifice dH (1)	Orifice dH (2)	Orifice dH (amb)	Meter oF (1)	Meter oF (2)	Meter oF (amb)	Meter Vac. In. Hg. (1)	Meter Vac. In. Hg. (2)	Dilution Tunnel Temp.	Dilution Tunnel dP	Pro. Rate (%) (1)	Pro. Rate (%) (2)	Scale Reading	Weight Change	Load Side Liquid Flow Rate	Boiler Side Liquid Flow Rate (optional)	Thermopile ΔT	Boiler to Heat Exch. Temp.	Heat Exch to Boiler Temp.	Inlet Load Temp.	Outlet Load Temp.	Stack	Filter (1)	Filter (2)	Ambient		Specific Heat of Inlet Water (BTU/lb-°F)	Mass Flow Rate of Inlet Water (lb/min)	Heat Output, Btu
236	37.979	37.446		0.16	0.16	1.33	1.06	0.36	83	83	70	2.76	1.6	73	0.044	100	100	308.3	-0.03	1.52	15.41	120.85	175.09	165.61	53.97	174.82	132	70	70	70	0.012	1.001	12.655	1531
237	38.141	37.609		0.16	0.16	1.33	1.06	0.36	83	83	70	2.75	1.6	73	0.045	99	100	308.0	0.33	1.42	15.49	120.48	174.81	165.34	54.11	174.59	131	70	70	70	0.012	1.001	11.850	1429
238	38.302	37.770		0.16	0.16	1.33	1.05	0.36	83	83	70	2.76	1.6	73	0.045	98	99	308.3	-0.31	1.44	15.50	120.44	174.57	165.10	53.86	174.30	130	70	70	70	0.012	1.001	12.011	1448
239	38.464	37.931		0.16	0.16	1.33	1.06	0.36	83	83	69	2.75	1.5	73	0.044	100	100	308.3	-0.07	1.42	15.48	120.04	174.44	164.93	54.11	174.15	129	70	70	69	0.012	1.001	11.855	1425
240	38.626	38.092		0.16	0.16	1.32	1.06	0.36	83	83	70	2.75	1.6	74	0.047	97	97	308.2	0.11	1.48	15.48	119.77	174.06	164.58	54.01	173.78	128	70	70	70	0.012	1.001	12.339	1480
241	38.788	38.255		0.16	0.16	1.32	1.06	0.36	83	83	69	2.76	1.6	73	0.045	99	100	307.9	0.31	1.52	15.55	119.64	173.91	164.44	54.03	173.67	128	70	70	69	0.011	1.001	12.658	1516
242	38.949	38.416		0.16	0.16	1.33	1.05	0.36	83	83	70	2.76	1.6	73	0.044	100	100	308.3	-0.35	1.50	15.41	119.35	173.58	164.10	53.97	173.33	127	70	70	70	0.011	1.001	12.498	1494
243	39.111	38.577		0.16	0.16	1.33	1.06	0.36	83	83	70	2.75	1.6	73	0.043	101	101	308.0	0.29	1.46	15.40	119.14	173.34	163.92	53.97	173.11	126	70	70	70	0.011	1.001	12.176	1452
244	39.273	38.738		0.16	0.16	1.33	1.06	0.36	83	83	70	2.74	1.6	73	0.044	100	100	307.8	0.17	1.44	15.50	118.83	173.16	163.72	54.02	172.86	126	70	70	70	0.011	1.001	12.015	1429
245	39.435	38.901		0.16	0.16	1.33	1.06	0.36	83	83	69	2.74	1.6	73	0.044	100	101	307.7	0.16	1.44	15.50	118.59	172.90	163.46	54.01	172.60	125	70	70	69	0.011	1.001	12.017	1427
246	39.596	39.061		0.16	0.16	1.33	1.06	0.36	83	83	69	2.74	1.5	73	0.040	104	104	307.7	-0.07	1.52	15.45	118.35	172.58	163.21	54.01	172.36	124	70	70	69	0.011	1.001	12.661	1500
247	39.758	39.223		0.16	0.16	1.33	1.06	0.36	83	83	69	2.74	1.6	73	0.042	103	103	308.4	-0.70	1.50	15.47	118.39	172.43	163.13	53.78	172.18	125	70	70	69	0.011	1.001	12.496	1481
248	39.919	39.384		0.16	0.16	1.33	1.06	0.36	83	83	69	2.75	1.6	73	0.045	98	99	308.1	0.27	1.50	15.41	117.84	172.10	162.74	54.02	171.86	123	70	70	69	0.010	1.001	12.494	1474
249	40.081	39.546		0.16	0.16	1.33	1.06	0.36	83	83	70	2.74	1.6	73	0.046	98	98	307.9	0.21	1.42	15.54	117.54	171.81	162.53	54.07	171.60	123	70	70	70	0.010	1.001	11.848	1394
250	40.243	39.708		0.16	0.16	1.33	1.06	0.36	83	83	69	2.75	1.6	73	0.045	99	100	308.3	-0.41	1.50	15.47	117.40	171.66	162.33	54.03	171.43	123	70	70	69	0.010	1.001	12.496	1469
251	40.404	39.869		0.16	0.16	1.33	1.06	0.36	83	83	70	2.76	1.6	73	0.043	101	101	308.1	0.27	1.48	15.39	117.25	171.39	162.11	53.93	171.18	121	70	70	70	0.010	1.001	12.336	1448
252	40.566	40.030		0.16	0.16	1.32	1.05	0.36	83	83	70	2.77	1.6	81	0.044	101	101	307.7	0.40	1.44	15.58	116.86	171.08	161.79	53.97	170.83	166	71	71	70	0.020	1.001	12.009	1405
253	40.728	40.191		0.16	0.16	1.33	1.06	0.36	83	83	70	2.75	1.6	74	0.043	101	101	308.1	-0.38	1.56	15.44	116.75	171.00	161.71	53.95	170.69	154	70	70	70	0.017	1.001	12.983	1518
254	40.890	40.352		0.16	0.16	1.33	1.06	0.36	83	83	69	2.75	1.6	73	0.046	98	98	307.1	0.96	1.48	15.52	116.53	170.79	161.55	54.02	170.55	145	70	70	69	0.016	1.001	12.331	1439
255	41.052	40.513		0.16	0.16	1.33	1.06	0.36	83	83	70	2.75	1.6	73	0.042	103	102	307.9	-0.76	1.50	15.45	116.42	170.46	161.32	53.87	170.29	140	70	70	70	0.015	1.001	12.493	1456
256	41.213	40.676		0.16	0.16	1.33	1.06	0.36	83	83	69	2.75	1.6	73	0.043	101	102	307.8	0.06	1.48	15.55	116.06	170.23	161.00	53.92	169.98	136	70	70	69	0.014	1.001	12.331	1433
257	41.375	40.837		0.16	0.16	1.33	1.06	0.36	83	83	69	2.74	1.6	73	0.043	101	101	308.1	-0.27	1.52	15.41	115.82	170.07	160.90	53.99	169.81	133	70	70	69	0.014	1.001	12.664	1469
258	41.537	40.998		0.16	0.16	1.33	1.06	0.36	83	83	69	2.74	1.5	73	0.044	100	100	307.3	0.74	1.52	15.40	115.46	169.69	160.55	54.00	169.45	130	70	70	69	0.013	1.001	12.666	1464
259	41.699	41.160		0.16	0.16	1.33	1.06	0.36	83	83	69	2.76	1.6	73	0.045	99	100	307.4	-0.12	1.51	15.57	115.32	169.46	160.26	53.90	169.22	129	70	70	69	0.012	1.001	12.606	1455
260	41.861	41.322		0.16	0.16	1.33	1.06	0.36	83	83	69	2.75	1.6	73	0.045	99	100	307.6	-0.20	1.46	15.53	115.08	169.23	160.10	53.91	168.99	127	70	70	69	0.012	1.001	12.175	1403
261	42.023	41.483		0.16	0.16	1.34	1.06	0.36	83	83	69	2.75	1.6	73	0.044	100	100	307.5	0.15	1.51	15.52	114.73	168.98	159.86	54.00	168.73	125	70	70	69	0.011	1.001	12.561	1443
262	42.185	41.644		0.16	0.16	1.33	1.06	0.36	83	83	69	2.75	1.6	73	0.045	99	99	307.5	0.04	1.50	15.47	114.50	168.74	159.60	53.94	168.44	125	70	70	69	0.011	1.001	12.502	1433
263	42.347	41.806		0.16	0.16	1.33	1.06	0.36	83	83	69	2.75	1.6	73	0.048	96	96	307.8	-0.29	1.46	15.45	114.41	168.48	159.41	53.85	168.25	123	70	70	69	0.011	1.001	12.179	1395
264	42.509	41.968		0.16	0.16	1.33	1.06	0.36	83	83	69	2.75	1.6	73	0.047	97	97	308.2	-0.43	1.58	15.45	113.99	168.26	159.21	54.04	168.03	123	70	70	69	0.011	1.001	13.141	1500
265	42.670	42.129		0.16	0.16	1.33	1.06	0.36	83	83	69	2.76	1.6	73	0.047	96	97	308.0	0.21	1.51	15.43	113.77	167.99	158.92	53.98	167.75	123	70	70	69	0.011	1.001	12.612	1437
266	42.832	42.291		0.16	0.16	1.33	1.07	0.36	83	83	69	2.76	1.6	73	0.042	103	103	307.6	0.33	1.43	15.52	113.72	167.88	158.77	53.88	167.59	122	70	70	69	0.010	1.001	11.902	1355
267	42.994	42.453		0.16	0.16	1.33	1.06	0.36	83	83	69	2.75	1.6	73	0.042	103	103	307.4	0.26	1.52	15.47	113.37	167.62	158.54	53.99	167.35	121	70	70	69	0.011	1.001	12.659	1437
268	43.156	42.614		0.16	0.16	1.33	1.06	0.36	83	83	69	2.74	1.6	73	0.047	97	97	307.9	-0.49	1.52	15.43	112.98	167.33	158.24	54.06	167.03	120	70	70	69	0.010	1.001	12.643	1430
269	43.318	42.776		0.16	0.16	1.33	1.07	0.36	83	83	69	2.74	1.6	73	0.043	101	102	307.8	0.03	1.46	15.58	112.91	167.02	158.05	53.91	166.82	121	70	70	69	0.010	1.001	12.177	1377
270	43.479	42.937		0.16	0.16	1.33	1.06	0.36	83	83	69	2.75	1.6	73	0.042	102	102	307.7	0.13	1.44	15.50	112.60	166.83	157.76	53.92	166.52	120	70	70	69	0.010	1.001	12.019	1355
271	43.641	43.100		0.16	0.16	1.33	1.06	0.36	83	83	69	2.76	1.5	73	0.044	100	101	307.3	0.39	1.50	15.45	112.40	166.46	157.54	53.86	166.25	120	70	70	69	0.010	1.001	12.470	1403
272	43.803	43.261		0.16	0.16	1.33	1.06	0.36	83	83	69	2.75	1.5	73	0.041	104	104	308.0	-0.67	1.46	15.53	112.00	166.31	157.36	54.05	166.05	119	70	70	69	0.009	1.001	12.173	1365
273	43.965	43.422		0.16	0.16	1.33	1.06	0.36	83	83	69	2.76	1.6	73	0.046	98	98	307.7	0.33	1.42	15.55	111.85	166.05	157.11	53.94	165.79	118	70	70	69	0.009	1.001	11.854	1327
274	44.127	43.584		0.16	0.16	1.33	1.06	0.36	83	83	69	2.74	1.6	73	0.046	98	98	307.7	-0.01	1.50	15.41	111.84	165.76	156.91	53.76	165.60	118	70	70	69	0.009	1.001	12.503	1400
275	44.289	43.746		0.16	0.16	1.33	1.06	0.36	83	83	69	2.74	1.6	73	0.045	99	100	307.7	-0.03	1.49	15.38	111.24	165.51	156.68	54.04	165.29	118	70	70	69	0.009	1.001	12.459	1388
276	44.450	43.907		0.16	0.16	1.33	1.06	0.36	83	83	69	2.75	1.6	73	0.044	100	100	307.7	-0.01	1.50	15.47	111.11	165.25	156.46	53.96	165.07	119	70	70	69	0.009	1.001	12.497	1390
277	44.613	44.068		0.16	0.16	1.33	1.06	0.36	83	83	69	2.76	1.6	73	0.044	101	100	307.5	0.17	1.50	15.44	110.91	165.04	156.20	53.92	164.82	117	70	70	69	0.009	1.001	12.490	1387
278	44.774	44.230		0.16	0.16	1.34	1.06	0.36	83	83	69	2.76	1.5	73	0.043	101	102	307.8	-0.26	1.44	15.44	110.68	164.88	156.01	53.93	164.61	118	70	70	69	0.009	1.001	12.013	1331
279	44.935	44.392		0.16	0.16	1.34	1.06	0.36	83	83	69	2.75	1.6	73	0.045	98	100	307.7	0.13	1.50	15.45	110.56	164.65	155.89	53.83	164.40	116	70	70	69	0.009	1.001	12.504	1384
280	45.097	44.553		0.16	0.16	1.33	1.06	0.36	83	82	69	2.75	1.6	73	0.042	103	103	307.3	0.31	1.46	15.47	110.10	164.26	155.50	53.95	164.05	115	70	70	69	0.009	1.001	12.179	1343
281	45.259	44.715		0.16	0.16	1.33	1.06	0.36	83	82	69	2.74	1.6	73	0.047	97	98	307.9	-0.51	1.46	15.48	109.87	164.00	155.26	53.93	163.80	116	70	70	69	0.009	1.001	12.177	1339
282	45.421	44.877		0.16	0.16	1.34	1.06	0.36	83	82	69	2.75	1.6	73	0.043	101	102	307.7	0.19	1.50	15.50	109.63	163.82	155.05	53.92	163.55	123	70	70	69	0.025	1.001	12.501	1372
283	45.583	45.038		0.16	0.16	1.33	1.06	0.36	83	82	69	2.76	1.6	78	0.044	101	101	307.4	0.28	1.46	15.55	109.35	163.52	154.83	53.92	163.27	151	70	70	69	0.016	1.001	12.170	1332
284	45.745	45.199		0.16	0.16	1.33	1.06	0.36	83	82	69	2.75	1.6	73	0.042	103	103	307.5	-0.12	1.52	15.52	109.25	163.39	154.63	53.88	163.13	141	70	70	69	0.014	1.001	12.662	1385
285	45.907	45.360		0.16	0.16	1.33	1.07	0.36	83	82	69	2.74	1.6	73	0.045	99	99	307.7	-0.22	1.48	15.50	108.97	163.14	154.41	53.92	162.89	135	70	70	69	0.013	1.001	12.339	1346
286	46.069	45.523		0.16	0.16	1.33	1.07	0.36	83	82	69	2.76	1.6	73	0.043	101	103	307.3	0.43	1.48	15.44	108.85	162.98	154.26	53.89	162.74	131	70	70	69	0.011	1.001	12.337	1344
287	46.231	45.684		0.16	0.16	1.33	1.06	0.36	83	82	69	2.75	1.6	73	0.042	103	103	307.2	0.10	1.44	15.50	108.47	162.58	153.88	53.89	162.36	128	70	70	69	0.011	1.001	12.016	1305
288	46.392	45.846		0.16	0.16	1.34	1.06	0.36	83	82	69	2.75	1.6	73	0.045	98	100	307.7	-0.44	1.44	15.49	108.27	162.35	153.75	53.89	162.17	125	70	70	69	0.010	1.001	12.015	1302
289	46.554	46.007		0.16	0.16	1.33	1.07	0.36	83	82	69	2.74	1.6	73	0.044	100	100	307.8	-0.09	1.48	15.46	108.02	162.20	153.54	53.92	161.94	123	70	70	69	0.010	1.001	12.340	1335
290	46.716	46.169		0.16	0.16	1.33	1.06	0.36	83	82	69	2.76	1.6	73	0.041	104	104	307.7	0.08	1.44	15.46	107.81	162.04	153.38	53.95	161.76	121	70	70	69	0.010	1.001	12.017	1297
291	46.878	46.331		0.16	0.16	1.33	1.06	0.36	83	82	69	2.76	1.6	73	0.044	100	101	307.3	0.38	1.46	15.44	107.67	161.71	153.12	53.84	161.51	119	70	70	69	0.009	1.001	12.175	1313
292	47.039	46.492		0.16	0.16	1.33	1.06	0.36	83	82	69	2.75	1.6	73	0.044	100	100	307.1	0.14	1.48	15.58	107.26	161.41	152.83	53.93	161.20	119	70	70	69	0.009	1.001	12.339	1325
293	47.201	46.654		0.16	0.16	1.33	1.06	0.36	83	82	69	2.74	1.6	73	0.045	99	100	307.8	-0.62	1.54	15.53	107.08	161.16	152.50	53.85	160.93	118	70	70	69	0.009	1.001	12.823	1375
294	47.362	46.816		0.16	0.16	1.33	1.07	0.36	83	82	69	2.76	1.6	73	0.043	101	102	307.5	0.23	1.58	15.48	106.84	160.93	152.39	53.90	160.73	117	70	70	69	0.009	1.001	13.149	1407
295	47.523	46.978		0.16	0.16	1.33	1.06	0.36	83	82	69	2.74	1.6	73	0.043	101	102	307.7	-0.11	1.50	15.49	106.62	160.74	152.19	53.89	160.51	116	70	70	69	0.009	1.001	12.503	1335
296	47.684	47.139		0.16	0.16	1.33	1.06	0.36	83	82	69	2.76	1.6	73	0.043	101	101	307.8	-0.11	1.56	15.50	106.35	160.45	151.92	53.89	160.23	122	70	70	69	0.016	1.001	12.979	1382
297	47.845	47.299		0.16	0.16	1.33	1.05	0.36	83	82	69	2.77	1.6	86	0.043	102	102	307.0	0.80	1.52	15.54	106.12	160.16	151.70	53.84	159.96	167	71	71	69	0.031	1.001	12.656	1345

Elapsed Time	Particulate Sampling Data																Fuel Weight, lb		Flow, gpm		Temperature Data, oF								Stack			
	Gas Meter Cubic Feet (1)	Gas Meter Cubic Feet (2)	Gas Meter Cubic Feet (amb)	Sample Rate, cfm (1)	Sample Rate, cfm (2)	Orifice dH (1)	Orifice dH (2)	Orifice dH (amb)	Meter oF (1)	Meter oF (2)	Meter oF (amb)	Meter Vac. In. Hg. (1)	Meter Vac. In. Hg. (2)	Dilution Tunnel Temp.	Dilution Tunnel dP	Pro. Rate (%) (1)	Pro. Rate (%) (2)	Scale Reading	Weight Change	Load Side Liquid Flow Rate	Boiler Side Liquid Flow Rate (optional)	Thermopile ΔT	Boiler to Heat Exch. Temp.	Heat Exch to Boiler Temp.	Inlet Load Temp.	Outlet Load Temp.	Stack	Filter (1)	Filter (2)	Ambient		Specific Heat of Inlet Water (BTU/lb-°F)	Mass Flow Rate of Inlet Water (lb/min)	Heat Output, Btu
298	48.006	47.460		0.16	0.16	1.33	1.05	0.36	83	82	69	2.78	1.6	91	0.043	102	103	305.1	1.91	1.48	15.47	105.88	160.16	151.58	53.96	159.84	202	71	71	69	0.032	1.001	12.334	1308
299	48.166	47.620		0.16	0.16	1.33	1.05	0.36	82	82	69	2.78	1.6	95	0.044	101	102	303.7	1.34	1.54	15.43	106.23	160.44	151.86	53.86	160.09	229	71	71	69	0.040	1.001	12.825	1364
300	48.327	47.780		0.16	0.16	1.33	1.05	0.36	83	82	69	2.78	1.6	99	0.043	103	103	302.1	1.57	1.56	15.51	106.71	160.88	152.26	53.85	160.56	245	72	71	69	0.043	1.001	12.980	1387
301	48.488	47.941		0.16	0.16	1.33	1.05	0.36	82	82	69	2.79	1.6	101	0.043	103	104	301.1	1.01	1.52	15.49	107.11	161.26	152.66	53.83	160.94	255	72	71	69	0.037	1.001	12.656	1357
302	48.648	48.100		0.16	0.16	1.33	1.05	0.36	82	82	69	2.8	1.6	104	0.043	103	103	299.8	1.37	1.48	15.47	107.66	161.92	153.25	53.95	161.61	261	73	72	69	0.047	1.001	12.334	1330
303	48.808	48.259		0.16	0.16	1.33	1.05	0.36	82	82	69	2.79	1.6	106	0.041	106	106	299.2	0.61	1.48	15.39	108.55	162.63	153.88	53.75	162.30	267	73	72	69	0.043	1.001	12.333	1340
304	48.968	48.419		0.16	0.16	1.33	1.05	0.36	82	82	69	2.81	1.6	108	0.043	103	104	298.0	1.12	1.50	15.45	109.12	163.46	154.65	53.98	163.10	273	74	73	69	0.047	1.001	12.496	1365
305	49.128	48.578		0.16	0.16	1.33	1.05	0.36	82	82	69	2.81	1.6	109	0.046	100	100	296.0	2.00	1.50	15.52	109.95	164.24	155.34	53.89	163.84	278	75	74	69	0.048	1.001	12.502	1376
306	49.287	48.737		0.16	0.16	1.32	1.04	0.36	82	82	69	2.81	1.6	111	0.041	106	106	295.1	0.94	1.54	15.47	110.70	164.98	155.59	53.89	164.59	283	76	74	69	0.045	1.001	12.825	1421
307	49.447	48.897		0.16	0.16	1.32	1.03	0.36	82	82	69	2.82	1.6	112	0.044	103	103	292.5	2.54	1.60	15.51	111.46	165.74	156.30	53.90	165.36	287	77	75	69	0.047	1.001	13.310	1485
308	49.606	49.055		0.16	0.16	1.32	1.04	0.36	82	82	69	2.84	1.7	113	0.042	105	104	292.6	0.00	1.52	15.43	112.28	166.63	157.01	53.91	166.19	291	78	76	69	0.051	1.001	12.659	1423
309	49.765	49.214		0.16	0.16	1.31	1.03	0.36	82	82	69	2.83	1.7	115	0.042	105	105	290.0	2.52	1.57	15.54	113.40	167.64	157.98	53.84	167.23	295	78	76	69	0.051	1.001	13.130	1491
310	49.924	49.371		0.16	0.16	1.31	1.03	0.36	82	82	69	2.85	1.7	115	0.041	106	105	289.1	0.91	1.58	15.55	114.33	168.52	158.84	53.84	168.17	297	79	77	69	0.045	1.001	13.143	1505
311	50.083	49.529		0.16	0.16	1.31	1.02	0.36	82	82	69	2.85	1.7	115	0.045	101	101	287.1	2.04	1.60	15.43	115.37	169.57	159.82	53.84	169.22	298	80	78	69	0.052	1.001	13.347	1542
312	50.242	49.687		0.16	0.16	1.31	1.01	0.36	82	82	69	2.85	1.7	116	0.040	107	107	285.6	1.49	1.50	15.45	116.41	170.66	160.78	53.86	170.27	298	80	78	69	0.049	1.001	12.500	1457
313	50.399	49.843		0.16	0.16	1.30	1.01	0.36	82	82	69	2.88	1.7	117	0.044	101	101	284.4	1.16	1.58	15.56	117.65	171.67	161.79	53.69	171.34	300	81	79	69	0.046	1.001	13.149	1549
314	50.558	50.000		0.16	0.16	1.30	1.00	0.36	82	82	69	2.88	1.7	117	0.041	106	105	282.3	2.10	1.50	15.45	118.24	172.55	162.58	53.93	172.17	301	81	79	69	0.053	1.001	12.491	1479
315	50.715	50.156		0.16	0.16	1.30	1.00	0.36	82	82	69	2.9	1.7	117	0.043	102	102	281.4	0.90	1.51	15.48	119.30	173.59	163.57	53.89	173.19	303	82	79	69	0.046	1.001	12.617	1507
316	50.873	50.312		0.16	0.16	1.29	1.00	0.36	82	82	69	2.9	1.7	116	0.041	105	105	278.6	2.81	1.52	15.58	120.44	174.75	164.55	53.87	174.31	303	82	80	69	0.045	1.001	12.659	1526
317	51.032	50.467		0.16	0.16	1.28	1.00	0.36	82	82	69	2.92	1.7	117	0.041	106	104	278.0	0.64	1.54	15.41	121.52	175.76	165.52	53.83	175.35	304	82	80	69	0.045	1.001	12.827	1561
318	51.189	50.623		0.16	0.16	1.29	0.99	0.36	82	82	69	2.91	1.8	116	0.040	106	106	276.3	1.70	1.54	15.38	122.54	176.81	166.44	53.81	176.36	304	82	80	69	0.051	1.001	12.802	1571
319	51.345	50.778		0.16	0.16	1.28	0.99	0.36	82	82	69	2.91	1.8	116	0.042	103	103	274.7	1.55	1.55	15.44	123.67	177.85	167.43	53.75	177.42	304	83	80	69	0.054	1.001	12.942	1603
320	51.501	50.933		0.16	0.16	1.28	0.98	0.36	82	82	69	2.92	1.8	116	0.045	99	99	272.8	1.99	1.53	14.48	124.59	178.94	168.35	53.87	178.47	305	83	81	69	0.056	1.001	12.780	1594
321	51.662	51.087		0.16	0.15	1.27	0.98	0.36	82	82	69	2.95	1.8	116	0.041	107	103	271.7	1.04	1.54	15.44	125.66	179.96	169.44	53.86	179.52	304	83	81	69	0.048	1.001	12.799	1610
322	51.824	51.242		0.16	0.15	1.28	0.98	0.36	82	82	69	2.95	1.8	116	0.042	107	103	270.5	1.22	1.35	15.43	126.79	181.07	170.48	53.84	180.63	305	83	81	69	0.053	1.001	11.234	1426
323	51.985	51.396		0.16	0.15	1.26	0.96	0.36	82	82	69	2.99	1.8	116	0.041	107	103	268.1	2.40	1.45	15.42	127.94	182.22	172.48	53.86	181.80	306	83	81	69	0.048	1.001	12.092	1549
324	52.147	51.548		0.16	0.15	1.30	1.00	0.36	82	82	69	3.05	1.9	109	0.045	103	97	267.2	0.86	1.41	15.43	128.91	183.21	173.42	53.91	182.81	299	83	81	69	0.039	1.001	11.729	1514
325	52.309	51.705		0.16	0.16	1.33	1.01	0.36	82	82	69	3.04	1.9	92	0.046	100	97	266.0	1.23	1.42	13.19	129.57	183.81	174.00	53.85	183.42	266	80	80	69	0.040	1.001	11.870	1540
326	52.471	51.861		0.16	0.16	1.34	1.01	0.36	82	82	69	3.02	1.9	88	0.045	101	97	265.5	0.52	1.38	10.70	129.87	184.10	174.35	53.93	183.80	249	79	79	69	0.037	1.001	11.531	1499
327	52.634	52.019		0.16	0.16	1.34	1.01	0.36	82	82	69	3	1.8	85	0.044	102	99	265.4	0.03	1.44	14.14	130.09	184.25	174.50	53.87	183.96	238	78	78	69	0.036	1.001	11.996	1562
328	52.797	52.176		0.16	0.16	1.34	1.01	0.36	82	82	69	3	1.8	85	0.044	102	99	264.8	0.63	1.44	9.04	130.22	184.49	174.59	53.92	184.13	230	77	77	69	0.035	1.001	12.011	1566
329	52.958	52.334		0.16	0.16	1.34	1.02	0.36	82	82	69	3	1.8	80	0.044	100	99	264.0	0.79	1.40	10.28	130.21	184.63	174.85	54.10	184.31	225	75	76	69	0.035	1.001	11.684	1523
330	53.118	52.492		0.16	0.16	1.34	1.01	0.36	82	82	69	2.98	1.8	79	0.047	96	96	263.9	0.16	1.40	15.42	130.37	184.70	174.91	54.02	184.39	220	74	75	69	0.034	1.001	11.711	1529
331	53.279	52.650		0.16	0.16	1.35	1.02	0.36	82	82	69	2.96	1.8	78	0.046	98	97	263.7	0.17	1.44	10.34	130.45	184.78	174.92	53.98	184.43	216	74	74	69	0.033	1.001	12.013	1569
332	53.440	52.808		0.16	0.16	1.35	1.01	0.36	82	82	69	2.96	1.9	77	0.046	98	97	263.8	-0.10	1.38	11.63	130.49	184.75	174.92	53.97	184.46	212	74	73	69	0.033	1.001	11.483	1500
333	53.601	52.965		0.16	0.16	1.32	1.02	0.36	82	82	69	2.92	1.8	76	0.046	98	96	263.6	0.18	1.41	8.95	130.38	184.72	174.90	54.02	184.40	209	74	72	69	0.032	1.001	11.716	1529
334	53.763	53.124		0.16	0.16	1.32	1.02	0.36	82	82	69	2.91	1.8	76	0.045	99	98	263.6	0.02	1.44	12.97	130.38	184.64	174.87	53.97	184.35	207	73	71	69	0.030	1.001	12.045	1572
335	53.924	53.281		0.16	0.16	1.32	1.02	0.36	82	82	69	2.89	1.8	74	0.048	96	94	263.3	0.31	1.44	9.05	130.37	184.64	174.82	53.99	184.35	207	72	69	69	0.030	1.001	12.012	1568
336	54.085	53.440		0.16	0.16	1.32	1.03	0.36	82	82	69	2.9	1.8	74	0.048	96	95	263.6	-0.32	1.40	11.01	130.31	184.47	174.73	53.90	184.21	207	71	69	69	0.030	1.001	11.690	1525
337	54.247	53.599		0.16	0.16	1.33	1.03	0.36	82	82	69	2.9	1.8	74	0.044	100	99	263.0	0.58	1.38	15.55	130.12	184.42	174.64	53.98	184.10	205	70	69	69	0.030	1.001	11.534	1503
338	54.409	53.758		0.16	0.16	1.33	1.03	0.36	82	82	69	2.87	1.8	74	0.046	98	97	263.1	-0.10	1.40	7.75	130.24	184.42	174.65	53.88	184.13	203	70	69	69	0.031	1.001	11.684	1524
339	54.570	53.917		0.16	0.16	1.33	1.03	0.36	82	82	69	2.88	1.8	74	0.046	98	97	263.3	-0.21	1.40	14.24	129.96	184.33	174.53	54.05	184.01	200	69	68	69	0.031	1.001	11.696	1522
340	54.732	54.077		0.16	0.16	1.33	1.03	0.36	82	82	69	2.88	1.8	74	0.044	100	100	263.5	-0.21	1.42	11.55	129.88	184.14	174.44	53.97	183.85	197	69	68	69	0.030	1.001	11.851	1541
341	54.895	54.236		0.16	0.16	1.33	1.04	0.36	82	82	69	2.87	1.8	73	0.044	101	99	263.2	0.38	1.38	12.87	129.84	184.10	174.41	53.98	183.82	195	68	68	69	0.030	1.001	11.531	1499
342	55.057	54.396		0.16	0.16	1.34	1.05	0.36	82	82	69	2.86	1.7	74	0.044	100	100	263.3	-0.16	1.38	11.59	129.55	183.88	174.15	54.06	183.61	192	68	67	69	0.029	1.001	11.532	1496
343	55.220	54.557		0.16	0.16	1.34	1.05	0.36	82	82	69	2.85	1.7	73	0.044	101	100	262.6	0.74	1.44	12.89	129.80	183.91	174.11	53.80	183.60	190	68	68	69	0.029	1.001	12.010	1561
344	55.382	54.717		0.16	0.16	1.34	1.05	0.36	82	82	69	2.84	1.7	73	0.043	102	101	263.2	-0.65	1.38	12.90	129.33	183.65	173.93	54.05	183.38	187	68	68	69	0.028	1.001	11.536	1494
345	55.545	54.878		0.16	0.16	1.35	1.06	0.36	82	82	69	2.83	1.7	73	0.045	100	99	263.6	-0.37	1.44	13.07	129.16	183.45	173.72	54.02	183.18	185	68	68	69	0.027	1.001	12.011	1553
346	55.708	55.040		0.16	0.16	1.34	1.06	0.36	82	82	69	2.84	1.7	73	0.046	99	99	263.1	0.48	1.42	12.77	129.07	183.39	173.72	54.06	183.12	182	68	68	69	0.026	1.001	11.856	1532
347	55.871	55.202		0.16	0.16	1.35	1.06	0.36	82	82	69	2.82	1.7	73	0.044	101	101	263.1	-0.02	1.42	14.16	129.06	183.29	173.53	53.93	182.98	180	68	68	69	0.026	1.001	11.856	1532
348	56.034	55.364		0.16	0.16	1.34	1.07	0.36	82	82	69	2.82	1.7	73	0.045	100	100	262.8	0.38	1.46	15.47	128.92	183.25	173.50	54.01	182.93	178	68	68	69	0.026	1.001	12.179	1572
349	56.197	55.526		0.16	0.16	1.34	1.08	0.36	82	82	69	2.83	1.7	73	0.045	100	100	263.1	-0.32	1.44	10.42	128.79	183.01	173.31	53.94	182.73	176	68	68	69	0.025	1.001	12.013	1549
350	56.360	55.689		0.16	0.16	1.35	1.08	0.36	82	82	69	2.82	1.6	73	0.045	100	100	263.3	-0.23	1.40	12.88	128.64	182.83	173.19	53.93	182.57	173	68	68	69	0.025	1.001	11.688	1505
351	56.524	55.852		0.16	0.16	1.35	1.09	0.36	82	82	69	2.8	1.6	73	0.044	102	101	263.3	0.00	1.40	12.87	128.30	182.64	173.05	54.09	182.39	171	68	68	69	0.024	1.001	11.694	1502
352	56.682	56.015		0.16	0.16	1.35	1.09	0.36	82	82	69	2.8	1.6	74	0.044	98	102	263.5	-0.18	1.44	13.56	128.34	182.55	172.93	53.98	182.32	169	68	68	69	0.023	1.001	12.013	1544
353	56.841	56.179		0.16	0.16	1.36	1.10	0.36	82	82	69	2.8	1.6	73	0.046	96	100	263.5	-0.04	1.36	13.43	128.21	182.38	172.79	53.92	182.13	168	68	68	69	0.024	1.001	11.367	1459
354	56.999	56.344		0.16	0.16	1.36	1.10	0.36	82	82	69	2.79	1.6	73	0.047	95	99	263.7	-0.16	1.46	10.32	127.97	182.20	172.53	53.93	181.89	166	68	69	69	0.022	1.001	12.174	1560
355	57.158	56.508		0.16	0.16	1.35	1.11	0.36	82	82	69	2.8	1.6	73	0.046	96	100	263.7	0.03	1.48	11.67	127.70	182.10	172.40	54.04	181.75	163	69	69	69	0.022	1.001	12.342	1578
356	57.316	56.666		0.16	0.16	1.28	1.00	0.36	82	82	69	2.7	1.5	73	0.044	98	98	263.5	0.15	1.44	11.64	127.64	181.83	172.25	53.92	181.57	162	69	69	69	0.021	1.001	12.018	1536
357	57.475	56.822		0.16	0.16	1.28	1.00	0.36	82	82	69	2.7	1.5	73	0.044	98	97	263.5	-0.01	1.42	12.87	127.42	181.65	172.11	53.98	181.40	160	69	69	69	0.020	1.001	11.849	1512
358	57.634	56.980		0.16	0.16	1.28	1.00	0.36	82	82	69	2.7	1.5	73	0.041	102	102	263.5	0.07	1.46	14.78	127.21	181.54	172.00	54.04	181.25	158	69	69	69	0.020	1.001	12.173	1550
359	57.794	57.136		0.16	0.16	1.28	1.01	0.36	82	82	69	2.71	1.5	73	0.045	98	96	263.7	-0.22	1.36	14.38	127.15	181.34	171.80	53.95	181.10	157	69	69	69	0.020	1.001	11.370	1447

Elapsed Time	Particulate Sampling Data																	Fuel Weight, lb		Flow, gpm		Temperature Data, oF									Stack			
	Gas Meter Cubic Feet (1)	Gas Meter Cubic Feet (2)	Gas Meter Cubic Feet (amb)	Sample Rate, cfm (1)	Sample Rate, cfm (2)	Orifice dH (1)	Orifice dH (2)	Orifice dH (amb)	Meter oF (1)	Meter oF (2)	Meter oF (amb)	Meter Vac. In. Hg. (1)	Meter Vac. In. Hg. (2)	Dilution Tunnel Temp.	Dilution Tunnel dP	Pro. Rate (%) (1)	Pro. Rate (%) (2)	Scale Reading	Weight Change	Load Side Liquid Flow Rate	Boiler Side Liquid Flow Rate (optional)	Thermopile ΔT	Boiler to Heat Exch. Temp.	Heat Exch to Boiler Temp.	Inlet Load Temp.	Outlet Load Temp.	Stack	Filter (1)	Filter (2)	Ambient		Specific Heat of Inlet Water (BTU/lb-°F)	Mass Flow Rate of Inlet Water (lb/min)	Heat Output, Btu
360	57.952	57.294		0.16	0.16	1.29	1.01	0.36	82	82	69	2.71	1.5	73	0.045	97	96	263.6	0.10	1.38	13.14	126.76	181.03	171.58	54.03	180.79	156	69	69	69	0.020	1.001	11.533	1464
361	58.111	57.450		0.16	0.16	1.28	1.00	0.36	82	82	69	2.7	1.5	73	0.045	97	96	263.4	0.16	1.38	14.11	126.65	180.89	171.38	54.01	180.66	154	69	69	69	0.019	1.001	11.531	1462
362	58.270	57.608		0.16	0.16	1.29	1.01	0.36	82	82	69	2.7	1.5	73	0.043	100	99	263.9	-0.50	1.42	15.53	126.49	180.73	171.26	54.02	180.50	152	69	69	69	0.019	1.001	11.853	1501
363	58.429	57.765		0.16	0.16	1.28	1.01	0.36	82	82	69	2.71	1.5	73	0.041	102	101	264.0	-0.05	1.42	11.64	126.38	180.54	171.03	53.91	180.28	150	69	69	69	0.018	1.001	11.851	1500
364	58.586	57.922		0.16	0.16	1.29	1.01	0.36	82	82	69	2.71	1.5	73	0.046	95	96	263.5	0.50	1.38	13.00	126.11	180.37	170.86	54.01	180.12	149	69	69	69	0.018	1.001	11.530	1456
365	58.745	58.079		0.16	0.16	1.28	1.00	0.36	82	82	69	2.69	1.5	73	0.045	97	97	263.1	0.40	1.42	14.21	125.99	180.13	170.67	53.91	179.90	148	69	69	69	0.018	1.001	11.856	1496
366	58.904	58.236		0.16	0.16	1.28	1.01	0.36	82	82	69	2.72	1.5	73	0.044	98	98	263.7	-0.64	1.40	14.13	125.75	179.98	170.50	53.97	179.72	147	69	69	69	0.017	1.001	11.690	1472
367	59.063	58.394		0.16	0.16	1.29	1.00	0.36	82	82	69	2.7	1.5	73	0.043	100	99	264.5	-0.84	1.46	14.16	125.66	179.82	170.38	53.88	179.55	146	69	69	69	0.017	1.001	12.176	1532
368	59.223	58.550		0.16	0.16	1.29	1.01	0.36	82	82	69	2.71	1.5	73	0.043	100	98	263.6	0.92	1.42	15.52	125.27	179.55	170.16	54.03	179.30	144	69	69	69	0.017	1.001	11.857	1487
369	59.381	58.708		0.16	0.16	1.29	1.01	0.36	82	82	69	2.7	1.5	73	0.044	98	98	263.5	0.16	1.42	13.01	125.09	179.30	169.87	53.95	179.04	142	69	69	69	0.016	1.001	11.856	1485
370	59.540	58.865		0.16	0.16	1.29	1.01	0.36	82	82	69	2.71	1.5	73	0.044	98	98	263.6	-0.13	1.25	12.94	124.81	179.11	171.09	54.02	178.83	141	69	69	69	0.016	1.001	10.400	1300
371	59.699	59.023		0.16	0.16	1.29	1.01	0.36	82	82	69	2.71	1.5	73	0.046	96	96	263.7	-0.14	1.31	15.53	124.73	179.09	171.13	54.05	178.79	140	69	69	69	0.016	1.001	10.886	1359
372	59.858	59.179		0.16	0.16	1.28	1.01	0.36	82	82	69	2.7	1.5	73	0.043	100	98	263.8	-0.06	1.21	14.16	124.67	178.94	171.02	54.02	178.69	140	69	69	69	0.015	1.001	10.074	1257
373	60.016	59.336		0.16	0.16	1.29	1.01	0.36	82	82	69	2.71	1.5	73	0.041	101	101	264.2	-0.39	1.25	14.19	124.37	178.78	170.83	54.12	178.49	139	69	69	69	0.015	1.001	10.400	1295
374	60.175	59.493		0.16	0.16	1.28	1.00	0.36	82	82	69	2.69	1.5	72	0.044	98	98	264.1	0.07	1.21	15.45	124.28	178.58	170.75	54.12	178.40	137	69	69	69	0.015	1.001	10.074	1253
375	60.334	59.650		0.16	0.16	1.29	1.00	0.36	82	82	69	2.71	1.5	72	0.041	102	101	263.6	0.46	1.27	15.46	124.00	178.43	170.56	54.17	178.17	137	69	69	69	0.015	1.001	10.564	1311
376	60.494	59.808		0.16	0.16	1.29	1.00	0.36	82	82	69	2.69	1.5	73	0.043	100	99	264.1	-0.42	1.29	15.44	123.70	178.19	170.30	54.24	177.94	136	69	69	69	0.014	1.001	10.722	1328
377	60.652	59.965		0.16	0.16	1.29	1.01	0.36	82	82	69	2.71	1.5	73	0.043	99	99	263.7	0.38	1.21	14.65	123.55	178.03	170.22	54.24	177.79	134	69	69	69	0.014	1.001	10.079	1247
378	60.811	60.122		0.16	0.16	1.29	1.01	0.36	82	82	69	2.7	1.5	72	0.042	101	100	263.7	-0.04	1.19	14.39	123.36	177.87	170.07	54.28	177.64	134	69	69	69	0.014	1.001	9.917	1225
379	60.970	60.279		0.16	0.16	1.29	1.01	0.36	82	82	69	2.7	1.5	73	0.041	102	101	263.7	0.01	1.21	12.93	123.17	177.74	169.87	54.28	177.45	133	69	69	69	0.014	1.001	10.079	1243
380	61.129	60.437		0.16	0.16	1.29	1.01	0.36	82	82	69	2.71	1.5	72	0.043	100	99	264.2	-0.54	1.25	15.51	122.96	177.54	169.67	54.30	177.26	131	69	69	69	0.013	1.001	10.394	1280
381	61.287	60.593		0.16	0.16	1.29	1.01	0.36	82	82	69	2.7	1.5	73	0.043	99	98	263.5	0.76	1.27	14.19	122.67	177.21	169.39	54.30	176.97	131	69	69	69	0.013	1.001	10.564	1297
382	61.446	60.751		0.16	0.16	1.28	1.01	0.36	82	82	69	2.71	1.5	72	0.046	96	96	263.9	-0.39	1.27	14.16	122.62	177.20	169.44	54.30	176.92	130	69	69	69	0.013	1.001	10.567	1297
383	61.605	60.908		0.16	0.16	1.28	1.00	0.36	82	82	69	2.7	1.5	72	0.043	100	99	263.7	0.16	1.19	15.56	122.37	176.90	169.15	54.29	176.66	130	69	69	69	0.013	1.001	9.914	1215
384	61.764	61.065		0.16	0.16	1.29	1.00	0.36	82	82	69	2.71	1.5	72	0.045	97	97	264.5	-0.81	1.23	14.23	122.26	176.80	169.02	54.28	176.54	129	69	69	69	0.013	1.001	10.242	1254
385	61.924	61.223		0.16	0.16	1.29	1.00	0.36	82	82	69	2.7	1.5	72	0.041	103	102	263.7	0.86	1.25	15.50	122.10	176.59	168.95	54.31	176.41	127	69	69	69	0.012	1.001	10.399	1271
386	62.083	61.379		0.16	0.16	1.29	1.01	0.36	82	82	69	2.7	1.5	72	0.043	100	98	263.6	0.02	1.21	15.46	121.84	176.37	168.67	54.29	176.13	128	69	69	69	0.012	1.001	10.075	1229
387	62.242	61.537		0.16	0.16	1.29	1.01	0.36	82	82	69	2.72	1.5	72	0.041	102	102	263.4	0.21	1.25	15.46	121.63	176.18	168.44	54.29	175.92	128	69	69	69	0.011	1.001	10.400	1267
388	62.400	61.694		0.16	0.16	1.29	1.01	0.36	82	82	69	2.7	1.5	72	0.042	100	100	263.7	-0.29	1.23	15.44	121.45	176.05	168.29	54.30	175.75	127	69	69	69	0.012	1.001	10.237	1245
389	62.559	61.852		0.16	0.16	1.28	1.01	0.36	82	82	69	2.7	1.5	72	0.044	98	98	264.0	-0.23	1.46	15.51	121.28	175.86	166.96	54.29	175.57	126	69	69	69	0.012	1.001	12.184	1479
390	62.718	62.008		0.16	0.16	1.29	1.01	0.36	82	82	69	2.71	1.5	72	0.042	101	99	264.8	-0.80	1.36	15.49	121.12	175.61	166.80	54.24	175.35	124	69	69	69	0.011	1.001	11.379	1380
391	62.876	62.165		0.16	0.16	1.29	1.01	0.36	82	82	69	2.7	1.5	72	0.043	99	99	264.2	0.59	1.44	15.36	120.92	175.34	166.34	54.17	175.09	123	69	69	69	0.011	1.001	12.027	1456
392	63.035	62.323		0.16	0.16	1.28	1.00	0.36	82	82	69	2.7	1.5	72	0.042	101	101	264.1	0.02	1.40	15.46	120.65	175.02	165.96	54.09	174.74	124	69	69	69	0.011	1.001	11.694	1413
393	63.194	62.479		0.16	0.16	1.29	1.01	0.36	82	82	69	2.71	1.5	72	0.045	97	96	264.5	-0.38	1.42	15.50	120.48	174.79	165.85	54.09	174.57	123	69	69	69	0.011	1.001	11.853	1430
394	63.354	62.637		0.16	0.16	1.29	1.00	0.36	82	82	69	2.7	1.5	72	0.044	99	98	263.4	1.14	1.36	15.53	120.25	174.57	165.62	54.09	174.33	122	69	69	69	0.010	1.001	11.373	1369
395	63.512	62.793		0.16	0.16	1.28	1.00	0.36	82	82	69	2.73	1.5	83	0.045	98	97	264.2	-0.82	1.40	15.47	119.84	174.31	165.28	54.14	173.99	169	71	70	69	0.022	1.001	11.703	1404
396	63.671	62.950		0.16	0.16	1.29	1.01	0.36	82	82	68	2.7	1.5	73	0.043	100	99	263.6	0.60	1.36	15.47	119.96	174.20	165.25	53.96	173.92	157	69	69	68	0.019	1.001	11.379	1367
397	63.829	63.107		0.16	0.16	1.29	1.01	0.36	82	82	69	2.7	1.5	72	0.043	99	99	263.0	0.65	1.42	15.48	119.79	173.94	165.04	53.90	173.69	149	69	69	69	0.017	1.001	11.853	1422
398	63.988	63.265		0.16	0.16	1.29	1.01	0.36	82	82	69	2.71	1.5	72	0.040	103	103	263.3	-0.32	1.32	15.54	119.45	173.64	164.67	53.92	173.37	144	69	69	69	0.016	1.001	11.046	1321
399	64.147	63.422		0.16	0.16	1.29	1.01	0.36	82	82	69	2.7	1.5	72	0.043	100	99	263.2	0.09	1.44	15.48	119.20	173.53	164.58	54.04	173.24	139	69	69	69	0.015	1.001	12.018	1434
400	64.306	63.579		0.16	0.16	1.28	1.01	0.36	82	82	69	2.7	1.5	72	0.041	102	101	263.2	-0.02	1.36	15.53	118.96	173.24	164.40	54.04	173.00	137	69	69	69	0.014	1.001	11.376	1355
401	64.465	63.736		0.16	0.16	1.29	1.00	0.36	82	82	69	2.71	1.5	72	0.041	102	101	263.2	0.04	1.42	15.52	118.83	173.05	164.18	53.98	172.81	132	69	69	69	0.014	1.001	11.853	1410
402	64.625	63.893		0.16	0.16	1.29	1.01	0.36	82	82	69	2.7	1.5	72	0.044	99	98	263.6	-0.47	1.42	15.43	118.52	172.79	163.87	53.98	172.50	132	69	69	69	0.013	1.001	11.855	1407
403	64.783	64.051		0.16	0.16	1.29	1.00	0.36	82	82	69	2.69	1.5	72	0.043	99	99	263.5	0.12	1.46	15.43	118.30	172.45	163.62	53.93	172.23	131	69	69	69	0.012	1.001	12.180	1443
404	64.942	64.208		0.16	0.16	1.29	1.01	0.36	82	82	69	2.7	1.5	72	0.043	100	99	263.7	-0.15	1.42	15.46	118.26	172.32	163.49	53.84	172.11	129	69	69	69	0.012	1.001	11.857	1404
405	65.101	64.365		0.16	0.16	1.29	1.00	0.36	82	82	69	2.7	1.5	72	0.045	97	97	263.3	0.38	1.33	15.38	117.88	172.13	163.31	54.01	171.89	128	69	69	69	0.012	1.001	11.048	1304
406	65.259	64.522		0.16	0.16	1.29	1.01	0.36	82	82	68	2.7	1.5	72	0.046	96	95	263.8	-0.50	1.40	15.46	117.74	171.84	163.07	53.89	171.63	127	69	69	68	0.011	1.001	11.689	1378
407	65.418	64.680		0.16	0.16	1.29	1.01	0.36	82	82	68	2.71	1.5	72	0.043	100	99	263.8	0.00	1.38	15.49	117.40	171.59	162.77	53.92	171.31	126	69	69	68	0.011	1.001	11.536	1356
408	65.577	64.836		0.16	0.16	1.28	1.00	0.36	82	82	68	2.7	1.5	72	0.044	98	97	263.6	0.14	1.40	15.48	117.25	171.36	162.59	53.89	171.14	124	69	69	68	0.011	1.001	11.700	1373
409	65.736	64.994		0.16	0.16	1.29	1.01	0.36	82	82	68	2.69	1.5	72	0.041	102	102	263.8	-0.15	1.46	15.48	116.93	171.19	162.37	53.97	170.90	123	69	69	68	0.011	1.001	12.179	1426
410	65.895	65.151		0.16	0.16	1.29	1.01	0.36	82	82	69	2.7	1.5	72	0.044	98	98	263.5	0.27	1.44	15.39	116.59	170.86	162.17	54.04	170.63	123	69	69	69	0.010	1.001	12.021	1403
411	66.055	65.308		0.16	0.16	1.29	1.01	0.36	82	82	69	2.7	1.5	72	0.043	100	99	263.9	-0.43	1.44	15.52	116.45	170.71	162.02	54.02	170.47	120	69	69	69	0.010	1.001	12.024	1402
412	66.213	65.465		0.16	0.16	1.29	1.00	0.36	82	82	69	2.71	1.5	72	0.045	97	97	263.6	0.34	1.44	15.44	116.20	170.44	161.65	53.97	170.17	122	69	69	69	0.010	1.001	12.020	1398
413	66.372	65.622		0.16	0.16	1.29	1.00	0.36	82	82	68	2.71	1.5	72	0.045	97	97	263.5	0.06	1.38	15.58	116.13	170.14	161.54	53.79	169.92	118	69	69	68	0.010	1.001	11.535	1341
414	66.530	65.780		0.16	0.16	1.29	1.01	0.36	82	82	69	2.71	1.5	72	0.046	96	96	263.6	-0.03	1.40	15.40	115.70	169.97	161.25	54.00	169.70	120	69	69	69	0.010	1.001	11.699	1355
415	66.689	65.936		0.16	0.16	1.29	1.01	0.36	82	82	69	2.69	1.5	72	0.046	96	95	263.0	0.57	1.46	15.47	115.70	169.77	161.10	53.84	169.55	118	69	69	69	0.010	1.001	12.183	1411
416	66.848	66.095		0.16	0.16	1.29	1.01	0.36	82	82	68	2.7	1.5	72	0.043	100	100	263.6	-0.56	1.40	15.51	115.27	169.50	160.84	53.97	169.24	119	69	69	68	0.009	1.001	11.697	1350
417	67.007	66.251		0.16	0.16	1.28	1.01	0.36	82	82	68	2.71	1.5	72	0.044	98	97	262.9	0.70	1.44	15.50	115.03	169.26	160.62	54.01	169.04	118	69	69	68	0.010	1.001	12.021	1385
418	67.166	66.409		0.16	0.16	1.28	1.01	0.36	82	82	68	2.71	1.5	72	0.045	97	97	264.1	-1.28	1.44	15.43	114.83	168.95	160.29	53.89	168.73	117	69	69	68	0.009	1.001	12.016	1382
419	67.326	66.566		0.16	0.16	1.29	1.01	0.36	82	82	68	2.7	1.5	72	0.044	99	98	263.7	0.39	1.44	15.45	114.59	168.81	160.07	53.93	168.53	117	69	69	68	0.009	1.001	12.021	1379
420	67.485	66.723		0.16	0.16	1.29	1.01	0.36	82	82	68	2.7	1.5	72	0.043	100	99	264.3	-0.54	1.46	15.53	114.30	168.45	159.80	53.92	168.22	116	69	69	68	0.009	1.001	12.176	1393
421	67.644	66.880		0.16	0.16	1.29	1.01	0.36	82	82	68	2.71	1.5	72	0.043	100	99	264.4	-0.13	1.44	15.51	114.26	168.32	159.66	53.84	168.10	114	69	69	68	0.009	1.001	12.020	1375

Elapsed Time	Particulate Sampling Data																	Fuel Weight, lb		Flow, gpm		Temperature Data, oF									Stack			
	Gas Meter Cubic Feet (1)	Gas Meter Cubic Feet (2)	Gas Meter Cubic Feet (amb)	Sample Rate, cfm (1)	Sample Rate, cfm (2)	Orifice dH (1)	Orifice dH (2)	Orifice dH (amb)	Meter oF (1)	Meter oF (2)	Meter oF (amb)	Meter Vac. In. Hg. (1)	Meter Vac. In. Hg. (2)	Dilution Tunnel Temp.	Dilution Tunnel dP	Pro. Rate (%) (1)	Pro. Rate (%) (2)	Scale Reading	Weight Change	Load Side Liquid Flow Rate	Boiler Side Liquid Flow Rate (optional)	Thermopile ΔT	Boiler to Heat Exch. Temp.	Heat Exch to Boiler Temp.	Inlet Load Temp.	Outlet Load Temp.	Stack	Filter (1)	Filter (2)	Ambient		Specific Heat of Inlet Water (BTU/lb-°F)	Mass Flow Rate of Inlet Water (lb/min)	Heat Output, Btu
422	67.802	67.037		0.16	0.16	1.29	1.01	0.36	82	82	68	2.71	1.5	72	0.045	97	97	264.0	0.43	1.42	15.46	113.85	168.05	159.42	53.96	167.80	115	69	69	68	0.009	1.001	11.857	1352
423	67.960	67.195		0.16	0.16	1.29	1.01	0.36	82	82	68	2.7	1.5	72	0.046	96	96	263.3	0.69	1.40	15.55	113.68	167.87	159.23	53.93	167.62	115	69	69	68	0.008	1.001	11.693	1331
424	68.119	67.352		0.16	0.16	1.28	1.01	0.36	82	82	68	2.7	1.5	72	0.045	97	97	263.7	-0.39	1.44	15.52	113.57	167.52	158.92	53.74	167.30	114	69	69	68	0.009	1.001	12.022	1367
425	68.278	67.510		0.16	0.16	1.28	1.01	0.36	82	82	68	2.7	1.5	72	0.045	97	97	264.0	-0.33	1.46	15.40	113.24	167.35	158.79	53.89	167.13	113	69	69	68	0.006	1.001	12.183	1381
426	68.437	67.666		0.16	0.16	1.28	1.00	0.36	82	82	69	2.73	1.5	79	0.046	97	96	262.9	1.16	1.42	15.40	112.86	166.96	158.39	53.89	166.75	154	70	69	69	0.017	1.001	11.854	1339
427	68.596	67.824		0.16	0.16	1.29	1.01	0.36	82	82	68	2.71	1.5	72	0.044	98	98	263.4	-0.58	1.44	15.46	112.78	166.78	158.17	53.76	166.54	144	69	69	68	0.015	1.001	12.015	1357
428	68.756	67.980		0.16	0.16	1.29	1.01	0.36	82	82	68	2.7	1.5	72	0.043	100	98	262.9	0.55	1.44	15.41	112.45	166.58	158.07	53.95	166.40	138	69	69	68	0.013	1.001	12.017	1353
429	68.914	68.137		0.16	0.16	1.29	1.01	0.36	82	82	68	2.7	1.5	72	0.045	97	97	262.9	-0.02	1.50	15.49	112.16	166.37	157.78	53.95	166.11	133	69	69	68	0.013	1.001	12.499	1404
430	69.073	68.295		0.16	0.16	1.29	1.01	0.36	82	82	68	2.71	1.5	72	0.045	97	97	263.1	-0.16	1.47	15.57	112.07	166.16	157.67	53.88	165.95	129	69	69	68	0.012	1.001	12.219	1371
431	69.232	68.452		0.16	0.16	1.29	1.01	0.36	82	82	68	2.7	1.5	72	0.043	100	99	263.4	-0.36	1.48	15.48	111.77	165.90	157.44	53.92	165.68	127	69	69	68	0.011	1.001	12.344	1381
432	69.390	68.610		0.16	0.16	1.29	1.01	0.36	82	82	68	2.7	1.5	72	0.042	100	101	263.3	0.10	1.40	15.51	111.47	165.67	157.16	53.94	165.41	125	69	69	68	0.011	1.001	11.708	1307
433	69.549	68.766		0.16	0.16	1.29	1.01	0.36	82	82	68	2.7	1.5	72	0.049	93	92	264.1	-0.74	1.40	15.54	111.46	165.45	156.98	53.79	165.25	123	69	69	68	0.010	1.001	11.701	1306
434	69.708	68.925		0.16	0.16	1.28	1.01	0.36	82	82	68	2.71	1.5	72	0.044	98	99	263.0	1.07	1.39	15.56	111.08	165.26	156.83	53.99	165.07	122	69	69	68	0.010	1.001	11.605	1291
435	69.867	69.081		0.16	0.16	1.28	1.01	0.36	82	82	68	2.71	1.5	72	0.045	97	96	263.4	-0.40	1.44	15.47	110.89	164.94	156.59	53.86	164.75	120	69	69	68	0.010	1.001	12.021	1335
436	70.026	69.239		0.16	0.16	1.29	1.01	0.36	82	82	68	2.69	1.5	72	0.042	101	101	263.3	0.05	1.46	15.51	110.81	164.78	156.39	53.76	164.57	121	69	69	68	0.009	1.001	12.176	1351
437	70.185	69.396		0.16	0.16	1.29	1.01	0.36	82	82	68	2.71	1.5	72	0.045	97	97	263.3	0.09	1.42	15.42	110.44	164.48	156.13	53.88	164.32	118	69	69	68	0.009	1.001	11.808	1306
438	70.344	69.553		0.16	0.16	1.29	1.01	0.36	82	82	68	2.7	1.5	72	0.044	98	98	262.3	0.95	1.48	15.42	110.19	164.31	155.92	53.88	164.07	117	69	69	68	0.009	1.001	12.309	1358
439	70.503	69.711		0.16	0.16	1.30	1.01	0.36	82	82	68	2.72	1.5	72	0.042	101	101	263.8	-1.47	1.46	15.35	109.70	163.99	155.59	54.03	163.73	116	69	69	68	0.009	1.001	12.147	1334
440	70.661	69.867		0.16	0.16	1.29	1.01	0.36	82	82	68	2.7	1.5	72	0.046	96	95	263.9	-0.16	1.57	15.46	109.61	163.65	154.20	53.85	163.46	114	69	69	68	0.009	1.001	13.127	1441
441	70.820	70.025		0.16	0.16	1.29	1.01	0.36	82	82	68	2.7	1.5	72	0.044	98	98	263.3	0.63	1.60	15.54	109.51	163.42	153.93	53.67	163.18	113	69	69	68	0.009	1.001	13.333	1462
442	70.979	70.182		0.16	0.16	1.29	1.01	0.36	82	82	68	2.71	1.5	72	0.046	96	95	263.1	0.19	1.62	15.42	109.21	163.12	153.65	53.67	162.88	114	69	69	68	0.008	1.001	13.478	1474
443	71.138	70.340		0.16	0.16	1.28	1.01	0.36	82	82	68	2.7	1.5	72	0.046	96	96	263.5	-0.41	1.54	15.36	108.62	162.84	153.41	53.94	162.56	113	69	69	68	0.008	1.001	12.834	1396
444	71.297	70.497		0.16	0.16	1.29	1.01	0.36	82	82	68	2.69	1.5	72	0.045	97	97	263.7	-0.20	1.58	15.44	108.62	162.66	153.23	53.74	162.36	113	69	69	68	0.008	1.001	13.173	1433
445	71.456	70.654		0.16	0.16	1.29	1.01	0.36	82	82	68	2.7	1.5	72	0.043	100	99	263.8	-0.06	1.58	15.44	108.36	162.36	152.93	53.74	162.10	112	69	69	68	0.008	1.001	13.154	1427
446	71.615	70.811		0.16	0.16	1.29	1.01	0.36	82	82	68	2.7	1.5	72	0.048	94	93	263.2	0.59	1.61	15.50	108.05	162.05	152.64	53.73	161.77	111	69	69	68	0.008	1.001	13.461	1456
447	71.774	70.968		0.16	0.16	1.29	1.01	0.36	82	82	68	2.71	1.5	72	0.045	97	97	263.7	-0.53	1.62	15.48	107.89	161.80	152.39	53.66	161.55	111	69	69	68	0.008	1.001	13.468	1455
448	71.933	71.126		0.16	0.16	1.29	1.00	0.36	82	82	68	2.71	1.5	72	0.044	98	98	263.0	0.72	1.56	15.38	107.64	161.47	152.15	53.61	161.25	112	69	69	68	0.008	1.001	12.992	1400
449	72.091	71.283		0.16	0.16	1.29	1.01	0.36	82	82	68	2.71	1.5	72	0.043	99	99	263.6	-0.59	1.58	15.49	107.34	161.13	151.87	53.60	160.93	110	69	69	68	0.007	1.001	13.149	1413
450	72.249	71.441		0.16	0.16	1.29	1.01	0.36	82	82	68	2.71	1.5	72	0.044	98	98	263.7	-0.15	1.58	15.52	107.07	160.92	151.64	53.64	160.71	110	69	69	68	0.007	1.001	13.151	1410
451	72.407	71.597		0.16	0.16	1.28	1.01	0.36	82	82	68	2.71	1.5	72	0.047	95	94	263.7	0.02	1.62	15.45	106.79	160.67	151.31	53.60	160.39	109	69	69	68	0.007	1.001	13.477	1441
452	72.565	71.755		0.16	0.16	1.29	1.01	0.36	82	82	68	2.71	1.5	72	0.042	100	101	263.4	0.36	1.56	15.45	106.56	160.41	151.12	53.62	160.18	108	69	69	68	0.007	1.001	12.990	1386
453	72.724	71.911		0.16	0.16	1.28	1.00	0.36	82	82	68	2.73	1.5	85	0.041	103	102	262.5	0.82	1.62	15.46	106.28	160.07	150.89	53.57	159.85	153	70	70	68	0.032	1.001	13.473	1434
454	72.882	72.068		0.16	0.16	1.28	1.00	0.36	82	82	68	2.72	1.5	89	0.043	100	100	261.7	0.83	1.64	15.52	106.04	159.91	150.64	53.61	159.65	193	70	70	68	0.035	1.001	13.633	1447
455	73.039	72.223		0.16	0.16	1.29	1.00	0.36	82	82	68	2.74	1.5	93	0.044	99	98	260.7	0.99	1.56	15.48	105.95	159.91	150.56	53.65	159.59	220	70	70	68	0.036	1.001	12.987	1378
456	73.197	72.380		0.16	0.16	1.29	0.99	0.36	82	82	68	2.73	1.5	97	0.043	101	101	259.3	1.40	1.60	15.47	106.40	160.33	150.99	53.62	160.02	238	71	70	68	0.037	1.001	13.316	1419
457	73.354	72.535		0.16	0.16	1.29	1.00	0.36	82	82	68	2.75	1.5	99	0.040	104	104	258.0	1.35	1.60	15.45	106.83	160.78	151.43	53.64	160.46	249	71	70	68	0.040	1.001	13.308	1423
458	73.512	72.691		0.16	0.16	1.28	1.00	0.36	82	82	68	2.73	1.5	101	0.038	108	107	257.0	0.93	1.60	15.50	107.46	161.43	151.99	53.62	161.08	256	72	71	68	0.044	1.001	13.308	1432
459	73.671	72.846		0.16	0.16	1.29	0.99	0.36	82	82	68	2.75	1.5	103	0.041	105	103	256.0	1.09	1.54	15.53	108.05	162.02	152.50	53.61	161.66	261	72	71	68	0.047	1.001	12.832	1388
460	73.828	73.002		0.16	0.16	1.29	0.99	0.36	82	82	68	2.74	1.5	104	0.042	102	102	254.7	1.26	1.65	15.52	108.60	162.55	152.85	53.60	162.19	265	72	71	68	0.040	1.001	13.798	1500
461	73.985	73.157		0.16	0.16	1.29	0.99	0.36	82	82	68	2.76	1.6	105	0.041	104	103	253.5	1.23	1.64	15.45	109.32	163.29	153.51	53.60	162.93	269	73	72	68	0.046	1.001	13.639	1493
462	74.141	73.312		0.16	0.16	1.29	0.99	0.36	82	82	68	2.76	1.6	107	0.039	106	106	252.8	0.63	1.63	15.50	110.06	163.97	154.18	53.59	163.65	273	74	72	68	0.051	1.001	13.631	1502
463	74.298	73.466		0.16	0.15	1.28	0.99	0.36	82	82	68	2.75	1.6	108	0.041	104	103	251.6	1.23	1.62	15.41	110.80	164.77	154.85	53.55	164.35	278	74	73	68	0.046	1.001	13.472	1495
464	74.456	73.621		0.16	0.16	1.27	0.98	0.36	82	82	68	2.76	1.6	110	0.043	102	101	249.8	1.77	1.60	15.48	111.80	165.76	155.74	53.59	165.38	284	75	74	68	0.049	1.001	13.309	1490
465	74.612	73.775		0.16	0.15	1.28	0.98	0.36	82	82	68	2.77	1.6	111	0.042	102	102	248.5	1.34	1.67	15.43	112.65	166.60	156.54	53.58	166.23	288	76	74	68	0.045	1.001	13.954	1574
466	74.768	73.929		0.16	0.15	1.28	0.98	0.36	82	82	68	2.78	1.6	112	0.042	102	102	246.6	1.91	1.64	15.48	113.57	167.58	157.41	53.59	167.16	291	77	75	68	0.051	1.001	13.635	1550
467	74.924	74.083		0.16	0.15	1.28	0.98	0.36	81	82	68	2.79	1.6	115	0.040	105	104	245.7	0.89	1.62	15.47	114.61	168.64	158.58	53.59	168.21	298	78	76	68	0.047	1.001	13.475	1546
468	75.081	74.236		0.16	0.15	1.27	0.97	0.36	81	82	68	2.79	1.6	115	0.040	106	104	244.0	1.66	1.56	15.45	115.72	169.67	159.66	53.60	169.31	300	78	76	68	0.051	1.001	12.991	1505
469	75.237	74.390		0.16	0.15	1.27	0.97	0.36	81	82	68	2.8	1.6	115	0.043	102	101	242.3	1.73	1.54	15.49	116.88	170.88	160.74	53.60	170.48	301	79	77	68	0.051	1.001	12.826	1501
470	75.392	74.542		0.16	0.15	1.26	0.97	0.36	81	82	68	2.8	1.6	115	0.043	101	99	241.4	0.93	1.52	15.43	117.89	171.92	161.72	53.63	171.52	302	79	77	68	0.048	1.001	12.662	1495
471	75.549	74.695		0.16	0.15	1.26	0.96	0.36	81	82	68	2.81	1.6	116	0.040	106	104	239.2	2.18	1.56	15.47	118.88	172.95	162.61	53.64	172.52	303	80	78	68	0.046	1.001	12.990	1546
472	75.710	74.848		0.16	0.15	1.26	0.96	0.36	81	82	68	2.81	1.6	116	0.038	112	107	237.5	1.71	1.58	15.47	119.92	174.01	163.55	53.63	173.55	305	80	78	68	0.052	1.001	13.145	1578
473	75.870	75.000		0.16	0.15	1.26	0.95	0.36	81	82	68	2.82	1.6	116	0.041	107	102	235.9	1.55	1.55	15.38	121.14	175.19	164.74	53.63	174.76	306	80	78	68	0.052	1.001	12.882	1562
474	76.030	75.151		0.16	0.15	1.25	0.95	0.36	81	82	68	2.84	1.7	114	0.044	103	98	235.2	0.72	1.62	15.43	122.20	176.26	165.72	53.65	175.85	302	81	79	68	0.045	1.001	13.480	1649
475	76.190	75.305		0.16	0.15	1.33	0.99	0.36	82	82	68	2.94	1.7	113	0.043	104	101	233.0	2.20	1.58	15.43	123.16	177.25	166.56	53.63	176.79	300	81	79	68	0.048	1.001	13.145	1621
476	76.350	75.459		0.16	0.15	1.33	0.99	0.36	82	82	68	2.94	1.8	114	0.040	108	104	231.5	1.52	1.58	15.43	124.21	178.31	167.59	53.65	177.86	301	81	79	68	0.051	1.001	13.148	1635
477	76.510	75.614		0.16	0.16	1.33	0.99	0.36	81	82	68	2.96	1.8	114	0.042	105	102	229.6	1.86	1.57	15.49	125.35	179.41	168.70	53.66	179.01	303	82	80	68	0.051	1.001	13.126	1647
478	76.666	75.768		0.16	0.15	1.33	0.99	0.36	81	82	68	2.97	1.8	114	0.040	105	104	228.1	1.52	1.56	15.50	126.40	180.48	169.68	53.66	180.06	304	82	80	68	0.053	1.001	12.993	1644
479	76.823	75.923		0.16	0.16	1.33	0.98	0.36	81	82	68	2.98	1.8	115	0.046	99	98	226.6	1.47	1.54	14.53	127.56	181.62	170.72	53.67	181.23	306	83	80	68	0.051	1.001	12.819	1637
480	76.979	76.077		0.16	0.15	1.33	0.98	0.36	82	82	68	2.97	1.8	102	0.043	100	100	225.2	1.40	1.53	15.43	128.53	182.63	171.65	53.66	182.18	292	81	80	68	0.039	1.001	12.744	1640
481	77.137	76.231		0.16	0.15	1.26	0.98	0.36	82	82	68	2.9	1.8	91	0.044	100	97	224.6	0.62	1.61	15.44	129.06	183.06	172.03	53.60	182.66	263	80	79	68	0.038	1.001	13.458	1739
482	77.295	76.386		0.16	0.16	1.27	0.98	0.36	82	82	68	2.89	1.8	87	0.043	100	99	223.4	1.20	1.56	14.15	129.30	183.43	172.40	53.73	183.03	248	79	78	68	0.037	1.001	13.033	1687
483	77.453	76.540		0.16	0.15	1.27	0.98	0.36	81	82	68	2.88	1.8	85	0.042	101	99	222.9	0.51	1.56	15.49	129.57	183.65	172.67	53.71	183.28	237	78	77	68	0.035	1.001	12.987	1685

Elapsed Time	Particulate Sampling Data																	Fuel Weight, lb		Flow, gpm		Temperature Data, oF								Stack			
	Gas Meter Cubic Feet (1)	Gas Meter Cubic Feet (2)	Gas Meter Cubic Feet (amb)	Sample Rate, cfm (1)	Sample Rate, cfm (2)	Orifice dH (1)	Orifice dH (2)	Orifice dH (amb)	Meter oF (1)	Meter oF (2)	Meter oF (amb)	Meter Vac. In. Hg. (1)	Meter Vac. In. Hg. (2)	Dilution Tunnel Temp.	Dilution Tunnel dP	Pro. Rate (%) (1)	Pro. Rate (%) (2)	Scale Reading	Weight Change	Load Side Liquid Flow Rate	Boiler Side Liquid Flow Rate (optional)	Thermopile ΔT	Boiler to Heat Exch. Temp.	Heat Exch to Boiler Temp.	Inlet Load Temp.	Outlet Load Temp.	Stack	Filter (1)	Filter (2)	Ambient		Specific Heat of Inlet Water (BTU/lb-°F)	Mass Flow Rate of Inlet Water (lb/min)	Heat Output, Btu
484	77.610	76.695		0.16	0.15	1.27	0.98	0.36	82	82	68	2.87	1.7	83	0.043	99	99	222.4	0.53	1.60	14.26	129.84	183.80	172.77	53.58	183.41	230	76	76	68	0.033	1.001	13.301	1729
485	77.768	76.849		0.16	0.15	1.27	0.98	0.36	81	82	68	2.86	1.7	79	0.047	95	93	222.0	0.38	1.58	11.65	129.90	183.99	172.92	53.72	183.62	224	75	75	68	0.036	1.001	13.138	1709
486	77.926	77.004		0.16	0.16	1.27	0.98	0.36	81	82	68	2.85	1.7	78	0.043	100	98	221.2	0.81	1.56	14.09	130.00	183.98	172.94	53.67	183.67	219	74	74	68	0.035	1.001	12.983	1690
487	78.084	77.159		0.16	0.16	1.28	0.99	0.36	81	82	68	2.85	1.7	77	0.045	97	96	221.6	-0.39	1.58	14.20	129.99	183.97	173.01	53.68	183.67	215	73	73	68	0.033	1.001	13.148	1711
488	78.243	77.315		0.16	0.16	1.27	0.99	0.36	81	82	68	2.85	1.7	77	0.044	99	97	221.2	0.35	1.60	12.47	130.05	184.00	173.08	53.65	183.70	211	74	72	68	0.033	1.001	13.306	1733
489	78.402	77.470		0.16	0.16	1.28	0.99	0.36	81	82	68	2.83	1.7	76	0.042	101	99	221.2	0.02	1.44	14.21	130.07	184.01	173.29	53.65	183.72	208	73	71	68	0.032	1.001	12.017	1565
490	78.561	77.626		0.16	0.16	1.29	0.99	0.36	81	82	68	2.83	1.7	75	0.041	102	101	220.9	0.28	1.44	11.97	129.94	183.95	174.12	53.69	183.64	206	73	70	68	0.031	1.001	12.023	1564
491	78.719	77.781		0.16	0.16	1.28	1.00	0.36	81	82	68	2.84	1.7	74	0.043	99	98	221.0	-0.11	1.46	10.85	129.87	183.92	174.03	53.73	183.61	206	72	69	68	0.032	1.001	12.183	1584
492	78.877	77.938		0.16	0.16	1.29	0.99	0.36	81	82	68	2.82	1.7	74	0.044	98	98	221.0	0.00	1.40	11.32	129.79	183.81	173.95	53.71	183.50	205	71	68	68	0.034	1.001	11.690	1519
493	79.036	78.093		0.16	0.16	1.28	1.00	0.36	81	82	68	2.81	1.7	73	0.043	100	98	221.0	0.04	1.46	11.58	129.74	183.77	173.93	53.75	183.48	203	70	69	68	0.034	1.001	12.183	1582
494	79.195	78.250		0.16	0.16	1.29	1.00	0.36	81	82	68	2.83	1.7	73	0.042	101	100	220.5	0.47	1.38	12.87	129.59	183.66	173.85	53.78	183.37	201	70	69	68	0.035	1.001	11.530	1496
495	79.354	78.406		0.16	0.16	1.28	1.00	0.36	81	82	68	2.8	1.7	73	0.043	100	98	220.8	-0.32	1.44	12.89	129.54	183.60	173.74	53.74	183.28	199	69	68	68	0.034	1.001	12.019	1559
496	79.513	78.564		0.16	0.16	1.29	1.01	0.36	81	82	68	2.81	1.7	73	0.040	103	103	220.4	0.39	1.48	12.45	129.25	183.41	173.69	53.89	183.14	196	68	68	68	0.033	1.001	12.347	1598
497	79.673	78.720		0.16	0.16	1.29	1.01	0.36	81	82	68	2.8	1.7	73	0.041	103	101	220.5	0.00	1.40	12.86	129.42	183.39	173.59	53.70	183.11	194	68	67	68	0.033	1.001	11.693	1515
498	79.833	78.878		0.16	0.16	1.29	1.01	0.36	82	82	68	2.8	1.7	73	0.041	103	102	220.0	0.43	1.46	12.94	129.19	183.37	173.59	53.89	183.08	191	68	67	68	0.032	1.001	12.182	1576
499	79.992	79.035		0.16	0.16	1.30	1.01	0.36	81	82	68	2.79	1.6	73	0.043	100	99	220.6	-0.56	1.36	10.75	129.17	183.25	173.42	53.75	182.92	189	68	68	68	0.032	1.001	11.378	1471
500	80.152	79.193		0.16	0.16	1.30	1.02	0.36	81	82	68	2.78	1.6	73	0.043	100	99	220.5	0.07	1.38	12.89	128.94	183.05	173.31	53.85	182.79	186	68	68	68	0.031	1.001	11.533	1489
501	80.312	79.351		0.16	0.16	1.30	1.02	0.36	81	82	68	2.78	1.6	73	0.047	96	95	221.3	-0.81	1.42	12.86	128.85	183.03	173.29	53.89	182.74	185	68	68	68	0.030	1.001	11.857	1530
502	80.471	79.509		0.16	0.16	1.31	1.03	0.36	81	82	68	2.78	1.6	73	0.045	98	97	220.4	0.89	1.44	12.91	128.80	182.84	173.15	53.81	182.62	182	68	68	68	0.030	1.001	12.019	1550
503	80.631	79.668		0.16	0.16	1.31	1.03	0.36	81	82	68	2.78	1.6	73	0.041	103	103	220.5	-0.05	1.44	12.88	128.59	182.79	172.95	53.89	182.48	179	68	68	68	0.029	1.001	12.019	1547
504	80.791	79.826		0.16	0.16	1.30	1.03	0.36	81	82	68	2.77	1.6	73	0.046	97	96	220.4	0.05	1.44	14.23	128.46	182.59	172.82	53.82	182.29	178	68	68	68	0.028	1.001	12.021	1546
505	80.952	79.985		0.16	0.16	1.30	1.04	0.36	82	82	68	2.75	1.6	73	0.045	99	98	220.3	0.13	1.46	14.19	128.34	182.44	172.73	53.83	182.18	176	68	68	68	0.028	1.001	12.177	1565
506	81.112	80.145		0.16	0.16	1.30	1.04	0.36	81	82	68	2.76	1.6	73	0.044	99	100	220.4	-0.11	1.42	14.24	128.22	182.30	172.61	53.82	182.04	175	68	68	68	0.027	1.001	11.858	1522
507	81.272	80.304		0.16	0.16	1.31	1.04	0.36	81	82	68	2.74	1.6	73	0.043	100	100	219.8	0.62	1.44	12.89	128.25	182.21	172.57	53.73	181.98	172	68	68	68	0.027	1.001	12.016	1543
508	81.433	80.463		0.16	0.16	1.32	1.04	0.36	81	82	68	2.74	1.6	73	0.046	98	97	220.4	-0.60	1.38	9.23	127.87	181.91	172.22	53.76	181.63	170	68	68	68	0.026	1.001	11.529	1476
509	81.593	80.624		0.16	0.16	1.32	1.04	0.36	81	82	68	2.73	1.6	73	0.046	97	98	220.4	-0.05	1.40	12.88	127.65	181.86	172.12	53.86	181.52	169	68	68	68	0.025	1.001	11.691	1494
510	81.754	80.783		0.16	0.16	1.31	1.05	0.36	81	82	68	2.75	1.6	72	0.046	98	97	220.2	0.20	1.42	11.68	127.51	181.59	171.91	53.83	181.33	167	68	68	68	0.025	1.001	11.854	1513
511	81.914	80.943		0.16	0.16	1.32	1.05	0.36	81	82	68	2.74	1.6	72	0.042	102	102	220.3	-0.04	1.46	13.66	127.42	181.46	171.86	53.81	181.22	165	68	68	68	0.025	1.001	12.185	1554
512	82.075	81.105		0.16	0.16	1.32	1.05	0.36	81	82	68	2.73	1.6	72	0.048	96	96	220.6	-0.31	1.42	12.98	127.28	181.36	171.71	53.83	181.10	162	68	68	68	0.024	1.001	11.859	1511
513	82.235	81.265		0.16	0.16	1.32	1.06	0.36	81	82	68	2.74	1.6	72	0.045	98	98	220.7	-0.15	1.44	14.16	127.16	181.28	171.64	53.83	180.99	161	68	68	68	0.024	1.001	12.021	1530
514	82.396	81.426		0.16	0.16	1.31	1.06	0.36	81	82	68	2.73	1.6	72	0.044	100	100	220.5	0.23	1.44	11.86	126.91	180.96	171.31	53.77	180.68	162	68	68	68	0.024	1.001	12.021	1527
515	82.557	81.587		0.16	0.16	1.32	1.06	0.36	81	82	68	2.74	1.5	72	0.042	102	102	220.6	-0.14	1.40	11.61	126.63	180.81	171.17	53.88	180.51	159	68	68	68	0.023	1.001	11.704	1484
516	82.717	81.748		0.16	0.16	1.32	1.06	0.36	81	82	68	2.73	1.5	73	0.044	99	100	220.6	0.01	1.44	12.86	126.51	180.60	171.00	53.84	180.35	159	68	68	68	0.022	1.001	12.024	1523
517	82.877	81.909		0.16	0.16	1.32	1.06	0.36	81	82	68	2.74	1.5	72	0.045	98	99	220.1	0.54	1.40	14.32	126.39	180.48	170.88	53.82	180.22	157	68	68	68	0.022	1.001	11.702	1481
518	83.038	82.070		0.16	0.16	1.32	1.06	0.36	81	82	68	2.74	1.5	72	0.044	100	100	220.3	-0.16	1.44	13.46	126.03	180.14	170.59	53.87	179.91	156	68	68	68	0.022	1.001	12.017	1516
519	83.198	82.231		0.16	0.16	1.32	1.06	0.36	81	82	68	2.74	1.5	72	0.046	97	98	220.5	-0.22	1.42	14.12	126.02	180.11	170.51	53.80	179.82	156	68	68	68	0.021	1.001	11.857	1496
520	83.359	82.392		0.16	0.16	1.32	1.06	0.36	81	82	68	2.75	1.5	72	0.043	101	101	221.0	-0.48	1.42	14.12	125.70	179.87	170.30	53.86	179.56	156	68	68	68	0.021	1.001	11.860	1493
521	83.519	82.553		0.16	0.16	1.32	1.06	0.36	81	82	68	2.75	1.5	72	0.042	102	102	220.5	0.47	1.29	14.23	125.67	179.74	170.85	53.77	179.44	153	68	68	68	0.021	1.001	10.736	1351
522	83.679	82.715		0.16	0.16	1.31	1.06	0.36	81	82	68	2.74	1.6	72	0.044	99	101	220.2	0.26	1.35	14.36	125.52	179.60	170.73	53.80	179.32	153	68	68	68	0.020	1.001	11.215	1409
523	83.839	82.875		0.16	0.16	1.31	1.05	0.36	81	82	68	2.75	1.5	72	0.040	104	104	220.5	-0.28	1.29	14.98	125.16	179.45	170.58	53.99	179.14	152	69	68	68	0.020	1.001	10.730	1345
524	84.000	83.036		0.16	0.16	1.31	1.06	0.36	81	82	68	2.74	1.5	72	0.043	101	101	220.5	0.04	1.29	14.32	125.07	179.29	170.57	53.99	179.06	150	69	68	68	0.019	1.001	10.732	1344
525	84.160	83.197		0.16	0.16	1.31	1.06	0.36	81	82	68	2.74	1.6	72	0.045	98	99	220.8	-0.35	1.33	14.34	124.93	179.02	170.34	53.86	178.79	148	69	68	68	0.019	1.001	11.049	1382
526	84.321	83.359		0.16	0.16	1.31	1.06	0.36	81	82	68	2.73	1.6	72	0.043	101	102	220.6	0.19	1.29	15.39	124.60	178.74	170.00	53.90	178.50	147	69	68	68	0.018	1.001	10.730	1339
527	84.481	83.519		0.16	0.16	1.32	1.06	0.36	81	82	68	2.73	1.5	72	0.042	102	102	219.8	0.81	1.33	14.26	124.41	178.66	169.98	54.02	178.43	146	69	68	68	0.018	1.001	11.054	1377
528	84.641	83.680		0.16	0.16	1.31	1.06	0.36	82	82	68	2.74	1.5	72	0.045	98	99	220.0	-0.20	1.33	14.19	124.27	178.42	169.73	53.92	178.20	147	69	68	68	0.018	1.001	11.056	1376
529	84.802	83.842		0.16	0.16	1.32	1.06	0.36	81	82	68	2.75	1.5	72	0.042	102	103	220.9	-0.87	1.33	15.44	124.07	178.32	169.59	53.97	178.04	145	69	68	68	0.018	1.001	11.059	1374
530	84.962	84.002		0.16	0.16	1.32	1.06	0.36	81	82	68	2.74	1.6	72	0.042	102	102	220.2	0.67	1.33	15.51	123.81	178.13	169.38	54.02	177.82	144	69	68	68	0.017	1.001	11.051	1370
531	85.123	84.163		0.16	0.16	1.32	1.06	0.36	81	82	68	2.73	1.6	72	0.045	99	99	220.7	-0.47	1.31	15.46	123.61	177.87	169.18	53.98	177.60	143	69	68	68	0.017	1.001	10.886	1347
532	85.283	84.324		0.16	0.16	1.32	1.06	0.36	81	82	68	2.74	1.5	72	0.043	100	101	221.0	-0.31	1.34	15.47	123.44	177.61	168.87	53.92	177.37	139	69	68	68	0.016	1.001	11.214	1386
533	85.444	84.486		0.16	0.16	1.32	1.06	0.36	81	82	68	2.74	1.5	72	0.044	100	101	220.5	0.49	1.38	15.51	123.15	177.36	168.66	53.94	177.09	142	69	68	68	0.016	1.001	11.535	1422
534	85.605	84.646		0.16	0.16	1.32	1.06	0.36	81	82	68	2.73	1.6	72	0.045	99	98	221.0	-0.44	1.35	15.45	122.92	177.20	168.51	54.00	176.92	139	69	68	68	0.016	1.001	11.216	1380
535	85.765	84.807		0.16	0.16	1.32	1.06	0.36	81	82	68	2.73	1.5	72	0.043	100	101	220.4	0.61	1.38	15.39	122.86	177.10	168.41	53.99	176.84	140	69	69	68	0.015	1.001	11.540	1419
536	85.926	84.969		0.16	0.16	1.32	1.06	0.36	81	82	68	2.74	1.6	72	0.044	100	101	220.7	-0.30	1.30	15.49	122.63	176.87	168.13	53.95	176.58	137	69	69	68	0.015	1.001	10.879	1336
537	86.086	85.130		0.16	0.16	1.32	1.06	0.36	81	82	68	2.75	1.6	72	0.045	98	99	220.8	-0.16	1.36	15.48	122.39	176.67	168.01	54.04	176.43	136	69	69	68	0.015	1.001	11.379	1394
538	86.246	85.290		0.16	0.16	1.32	1.06	0.36	81	82	68	2.75	1.6	72	0.044	99	100	220.2	0.60	1.38	15.42	122.25	176.51	167.84	54.03	176.28	134	69	69	68	0.014	1.001	11.493	1407
539	86.407	85.451		0.16	0.16	1.32	1.06	0.36	81	82	68	2.74	1.6	72	0.042	102	102	220.7	-0.48	1.35	15.45	122.16	176.37	167.72	53.95	176.11	135	69	68	68	0.015	1.001	11.215	1372
540	86.567	85.613		0.16	0.16	1.32	1.06	0.36	81	81	68	2.74	1.6	72	0.046	97	99	220.1	0.62	1.33	15.31	121.80	176.01	167.31	53.91	175.71	135	69	69	68	0.014	1.001	11.059	1349
541	86.727	85.773		0.16	0.16	1.32	1.05	0.36	81	82	68	2.74	1.5	72	0.044	99	100	221.5	-1.39	1.33	15.46	121.48	175.79	167.21	54.05	175.53	132	69	68	68	0.014	1.001	11.053	1344
542	86.888	85.934		0.16	0.16	1.32	1.06	0.36	81	81	68	2.73	1.5	72	0.043	101	101	220.0	1.43	1.35	15.39	121.48	175.63	167.04	53.94	175.41	134	69	69	68	0.014	1.001	11.222	1365
543	87.048	86.096		0.16	0.16	1.32	1.06	0.36	81	81	68	2.72	1.5	72	0.040	104	106	220.5	-0.48	1.34	15.38	121.15	175.38	166.77	54.01	175.16	133	69	69	68	0.013	1.001	11.178	1356
544	87.209	86.257		0.16	0.16	1.32	1.06	0.36	81	81	68	2.72	1.5	72	0.042	102	103	220.6	-0.07	1.31	15.48	121.03	175.24	166.66	53.94	174.97	129	69	69	68	0.013	1.001	10.893	1320
545	87.369	86.417		0.16	0.16	1.31	1.06	0.36	81	81	68	2.72	1.5	72	0.043	100	101	220.4	0.20	1.40	15.36	120.72	174.97	166.40	54.02	174.74	130	69	69	68	0.013	1.001	11.654	1408

Elapsed Time	Particulate Sampling Data																	Fuel Weight, lb		Flow, gpm		Temperature Data, oF									Stack			
	Gas Meter Cubic Feet (1)	Gas Meter Cubic Feet (2)	Gas Meter Cubic Feet (amb)	Sample Rate, cfm (1)	Sample Rate, cfm (2)	Orifice dH (1)	Orifice dH (2)	Orifice dH (amb)	Meter oF (1)	Meter oF (2)	Meter oF (amb)	Meter Vac. In. Hg. (1)	Meter Vac. In. Hg. (2)	Dilution Tunnel Temp.	Dilution Tunnel dP	Pro. Rate (%) (1)	Pro. Rate (%) (2)	Scale Reading	Weight Change	Load Side Liquid Flow Rate	Boiler Side Liquid Flow Rate (optional)	Thermopile ΔT	Boiler to Heat Exch. Temp.	Heat Exch to Boiler Temp.	Inlet Load Temp.	Outlet Load Temp.	Stack	Filter (1)	Filter (2)	Ambient		Specific Heat of Inlet Water (BTU/lb-°F)	Mass Flow Rate of Inlet Water (lb/min)	Heat Output, Btu
546	87.529	86.578		0.16	0.16	1.32	1.06	0.36	81	81	68	2.72	1.5	72	0.045	98	99	220.7	-0.35	1.38	15.43	120.50	174.78	166.22	54.05	174.55	130	69	69	68	0.013	1.001	11.541	1392
547	87.689	86.740		0.16	0.16	1.32	1.06	0.36	81	81	68	2.72	1.5	72	0.043	100	102	220.7	0.08	1.38	14.21	120.42	174.54	166.04	53.91	174.33	128	69	69	68	0.012	1.001	11.502	1387
548	87.849	86.900		0.16	0.16	1.31	1.06	0.36	81	81	68	2.71	1.5	72	0.044	99	100	220.6	0.06	1.33	15.52	120.23	174.37	165.83	53.92	174.14	127	69	69	68	0.012	1.001	11.054	1331
549	88.010	87.061		0.16	0.16	1.31	1.07	0.36	81	81	68	2.71	1.5	72	0.043	101	101	220.0	0.58	1.38	15.39	119.85	174.13	165.57	54.03	173.88	127	69	69	68	0.012	1.001	11.532	1384
550	88.170	87.223		0.16	0.16	1.31	1.06	0.36	81	81	68	2.71	1.5	72	0.043	100	102	220.2	-0.20	1.34	15.45	119.79	173.98	165.44	53.95	173.74	137	69	69	68	0.031	1.001	11.211	1345
551	88.330	87.383		0.16	0.16	1.31	1.05	0.36	81	81	68	2.73	1.6	77	0.046	97	98	220.0	0.23	1.36	15.52	119.54	173.72	165.22	53.94	173.48	154	70	70	68	0.022	1.001	11.378	1362
552	88.491	87.543		0.16	0.16	1.32	1.06	0.36	81	81	68	2.7	1.5	72	0.044	100	100	220.2	-0.17	1.33	15.41	119.22	173.47	164.93	53.99	173.21	148	69	68	68	0.019	1.001	11.053	1319
553	88.652	87.704		0.16	0.16	1.32	1.06	0.36	81	81	68	2.7	1.6	72	0.045	99	99	220.4	-0.24	1.33	15.46	119.15	173.33	164.87	53.95	173.10	145	69	69	68	0.017	1.001	11.110	1325
554	88.812	87.865		0.16	0.16	1.31	1.05	0.36	81	81	68	2.7	1.5	72	0.043	100	101	220.0	0.38	1.33	15.51	118.87	173.18	164.71	54.03	172.91	142	69	69	68	0.016	1.001	11.052	1315
555	88.973	88.026		0.16	0.16	1.32	1.06	0.36	81	81	68	2.7	1.5	72	0.044	100	100	219.5	0.48	1.36	15.49	118.66	172.92	164.47	54.04	172.70	138	69	69	68	0.015	1.001	11.305	1343
556	89.134	88.187		0.16	0.16	1.32	1.06	0.36	81	81	68	2.69	1.6	72	0.044	100	100	219.4	0.09	1.34	15.54	118.55	172.70	164.26	53.94	172.49	136	69	69	68	0.014	1.001	11.208	1330
557	89.294	88.349		0.16	0.16	1.32	1.06	0.36	81	81	68	2.7	1.5	72	0.043	100	102	219.7	-0.29	1.36	15.36	118.35	172.49	164.06	53.91	172.26	136	69	69	68	0.014	1.001	11.376	1348
558	89.454	88.509		0.16	0.16	1.32	1.06	0.36	81	81	68	2.7	1.5	72	0.045	98	99	219.8	-0.06	1.37	15.49	118.02	172.26	163.88	54.01	172.04	132	69	69	68	0.013	1.001	11.462	1354
559	89.615	88.670		0.16	0.16	1.32	1.06	0.36	81	81	68	2.69	1.5	72	0.043	101	101	219.8	0.04	1.34	15.53	117.94	172.14	163.65	53.91	171.86	131	69	69	68	0.013	1.001	11.148	1316
560	89.775	88.831		0.16	0.16	1.32	1.06	0.36	81	81	68	2.71	1.6	72	0.045	98	99	220.3	-0.55	1.33	15.43	117.76	171.97	163.51	53.94	171.70	129	69	69	68	0.012	1.001	11.055	1303
561	89.935	88.993		0.16	0.16	1.32	1.06	0.36	81	81	68	2.69	1.6	72	0.046	97	99	219.5	0.83	1.36	15.51	117.46	171.61	163.20	53.97	171.42	128	69	69	68	0.012	1.001	11.340	1334
562	90.096	89.153		0.16	0.16	1.32	1.06	0.36	81	81	68	2.7	1.6	72	0.043	101	101	219.8	-0.37	1.38	15.41	117.24	171.41	163.12	53.97	171.21	127	69	69	68	0.013	1.001	11.539	1354
563	90.256	89.314		0.16	0.16	1.32	1.06	0.36	81	81	68	2.7	1.6	72	0.042	102	103	220.1	-0.27	1.36	15.39	117.06	171.26	162.88	53.97	171.03	125	69	69	68	0.011	1.001	11.304	1325
564	90.416	89.476		0.16	0.16	1.32	1.06	0.36	81	81	68	2.7	1.5	72	0.046	97	99	219.2	0.95	1.39	15.49	116.86	170.96	162.63	53.93	170.79	126	69	69	68	0.011	1.001	11.554	1352
565	90.577	89.636		0.16	0.16	1.32	1.06	0.36	81	81	68	2.7	1.6	72	0.046	98	97	219.9	-0.70	1.36	15.46	116.50	170.75	162.45	54.05	170.55	123	69	69	68	0.011	1.001	11.309	1319
566	90.737	89.797		0.16	0.16	1.32	1.06	0.36	81	81	68	2.7	1.5	72	0.046	97	98	220.1	-0.22	1.38	15.55	116.48	170.70	162.35	53.94	170.41	124	69	69	68	0.011	1.001	11.543	1346
567	90.897	89.959		0.16	0.16	1.32	1.06	0.36	81	81	68	2.7	1.5	72	0.046	97	99	219.5	0.57	1.31	15.41	116.16	170.38	162.03	53.96	170.12	124	69	69	68	0.010	1.001	10.895	1267
568	91.058	90.120		0.16	0.16	1.32	1.06	0.36	81	81	68	2.7	1.6	72	0.045	99	99	220.8	-1.26	1.36	15.45	115.92	170.10	161.84	53.95	169.87	121	69	69	68	0.010	1.001	11.377	1320
569	91.218	90.280		0.16	0.16	1.32	1.06	0.36	81	81	68	2.7	1.5	72	0.045	98	99	220.2	0.60	1.36	15.52	115.71	169.86	161.49	53.91	169.62	122	69	69	68	0.010	1.001	11.374	1318
570	91.379	90.441		0.16	0.16	1.31	1.06	0.36	81	81	68	2.69	1.5	72	0.046	98	98	220.6	-0.41	1.34	15.51	115.52	169.62	161.33	53.91	169.43	121	69	69	68	0.010	1.001	11.187	1294
571	91.539	90.603		0.16	0.16	1.32	1.06	0.36	81	81	68	2.69	1.6	72	0.043	100	102	220.8	-0.25	1.29	15.48	115.29	169.53	161.25	54.00	169.29	122	69	69	68	0.010	1.001	10.761	1242
572	91.700	90.764		0.16	0.16	1.32	1.06	0.36	81	81	68	2.69	1.6	72	0.043	101	101	220.6	0.26	1.33	15.48	115.10	169.30	160.99	53.94	169.04	120	69	69	68	0.010	1.001	11.056	1274
573	91.860	90.924		0.16	0.16	1.32	1.06	0.36	81	81	68	2.7	1.6	72	0.047	96	96	220.1	0.46	1.37	15.50	114.72	168.97	160.69	53.99	168.71	120	69	69	68	0.009	1.001	11.411	1311
574	92.021	91.086		0.16	0.16	1.32	1.07	0.36	81	81	68	2.7	1.5	72	0.043	101	102	220.2	-0.12	1.36	15.50	114.69	168.83	160.62	53.94	168.63	120	69	69	68	0.010	1.001	11.377	1306
575	92.182	91.247		0.16	0.16	1.32	1.06	0.36	81	81	68	2.7	1.5	72	0.044	100	100	220.2	0.07	1.36	15.45	114.31	168.56	160.35	54.01	168.32	117	69	69	68	0.009	1.001	11.380	1302
576	92.342	91.408		0.16	0.16	1.32	1.06	0.36	81	81	68	2.7	1.5	72	0.045	98	99	219.7	0.44	1.36	15.52	114.14	168.31	160.11	53.91	168.05	119	69	69	68	0.009	1.001	11.379	1300
577	92.503	91.569		0.16	0.16	1.32	1.06	0.36	81	81	68	2.69	1.6	72	0.043	101	101	220.4	-0.70	1.35	15.50	113.97	168.10	159.95	53.93	167.90	119	69	69	68	0.009	1.001	11.222	1280
578	92.662	91.730		0.16	0.16	1.32	1.06	0.36	81	81	68	2.69	1.5	72	0.044	99	100	220.0	0.43	1.36	15.47	113.62	167.88	159.74	54.03	167.64	116	69	69	68	0.009	1.001	11.324	1288
579	92.823	91.891		0.16	0.16	1.31	1.06	0.36	81	81	68	2.7	1.5	72	0.045	99	99	220.4	-0.41	1.36	15.50	113.59	167.68	159.59	53.91	167.50	116	69	69	68	0.009	1.001	11.375	1294
580	92.983	92.051		0.16	0.16	1.31	1.06	0.36	81	81	68	2.69	1.5	72	0.044	99	100	220.3	0.09	1.36	15.43	113.24	167.48	159.32	53.98	167.22	117	69	69	68	0.009	1.001	11.377	1290
581	93.144	92.213		0.16	0.16	1.32	1.05	0.36	81	81	68	2.72	1.6	76	0.043	101	102	220.1	0.25	1.34	15.45	113.01	167.20	159.13	54.01	167.02	144	69	69	68	0.033	1.001	11.156	1262
582	93.303	92.373		0.16	0.16	1.32	1.05	0.36	81	81	68	2.7	1.6	75	0.043	100	101	219.7	0.39	1.38	15.45	112.77	166.88	158.79	53.91	166.68	144	69	69	68	0.017	1.001	11.489	1297
583	93.464	92.534		0.16	0.16	1.31	1.06	0.36	81	81	68	2.7	1.6	72	0.045	99	99	219.7	-0.07	1.32	15.52	112.70	166.77	158.67	53.84	166.55	139	69	68	68	0.015	1.001	11.023	1244
584	93.624	92.694		0.16	0.16	1.31	1.06	0.36	81	81	68	2.7	1.5	72	0.044	99	100	219.9	-0.15	1.34	15.51	112.48	166.60	158.55	53.89	166.38	135	69	69	68	0.014	1.001	11.214	1263
585	93.785	92.856		0.16	0.16	1.31	1.06	0.36	81	81	68	2.7	1.5	71	0.045	99	100	219.8	0.09	1.38	15.58	112.25	166.47	158.45	53.97	166.22	133	69	69	68	0.013	1.001	11.527	1296
586	93.945	93.017		0.16	0.16	1.32	1.06	0.36	81	81	68	2.7	1.5	72	0.040	104	105	220.1	-0.30	1.40	15.47	111.92	166.15	158.08	53.94	165.86	130	69	69	68	0.012	1.001	11.699	1311
587	94.105	93.177		0.16	0.16	1.32	1.06	0.36	81	81	68	2.69	1.6	71	0.043	100	101	219.9	0.20	1.35	15.49	111.67	165.91	157.89	54.04	165.71	128	69	69	68	0.012	1.001	11.217	1254
588	94.266	93.339		0.16	0.16	1.32	1.06	0.36	81	81	68	2.7	1.5	71	0.044	100	101	219.5	0.42	1.38	15.48	111.51	165.65	157.65	53.93	165.43	125	69	69	68	0.011	1.001	11.539	1288
589	94.426	93.500		0.16	0.16	1.32	1.05	0.36	81	81	68	2.69	1.5	71	0.043	100	101	220.3	-0.83	1.36	15.44	111.38	165.52	157.48	53.87	165.25	124	69	69	68	0.011	1.001	11.358	1267
590	94.587	93.661		0.16	0.16	1.32	1.06	0.36	81	81	68	2.7	1.6	72	0.043	101	101	220.1	0.21	1.35	15.45	111.18	165.29	157.32	53.92	165.10	123	69	69	68	0.011	1.001	11.294	1257
591	94.747	93.821		0.16	0.16	1.32	1.06	0.36	81	81	68	2.69	1.5	72	0.043	100	101	220.0	0.08	1.38	15.43	110.95	165.10	157.07	53.91	164.86	122	69	69	68	0.010	1.001	11.529	1281
592	94.908	93.983		0.16	0.16	1.33	1.06	0.36	81	81	68	2.69	1.6	72	0.048	96	97	219.6	0.45	1.36	15.57	110.81	165.00	157.04	53.93	164.74	120	69	68	68	0.010	1.001	11.346	1259
593	95.068	94.144		0.16	0.16	1.32	1.06	0.36	81	81	68	2.7	1.5	72	0.046	97	98	219.7	-0.13	1.33	15.47	110.43	164.70	156.74	54.01	164.44	118	69	68	68	0.010	1.001	11.054	1222
594	95.229	94.305		0.16	0.16	1.32	1.06	0.36	81	81	68	2.69	1.5	72	0.041	103	104	219.4	0.33	1.32	15.50	110.27	164.46	156.43	53.88	164.16	119	69	68	68	0.009	1.001	11.035	1218
595	95.390	94.466		0.16	0.16	1.32	1.07	0.36	81	81	68	2.7	1.5	72	0.044	100	100	219.9	-0.51	1.31	15.48	109.93	164.17	156.27	54.05	163.98	118	69	68	68	0.009	1.001	10.901	1200
596	95.551	94.628		0.16	0.16	1.32	1.06	0.36	81	81	68	2.7	1.6	72	0.044	100	101	219.8	0.05	1.37	15.43	109.85	164.00	156.11	53.93	163.78	117	69	68	68	0.009	1.001	11.382	1252
597	95.711	94.788		0.16	0.16	1.32	1.06	0.36	81	81	68	2.69	1.5	72	0.044	99	100	219.6	0.27	1.36	15.47	109.67	163.75	155.81	53.88	163.55	117	69	69	68	0.009	1.001	11.380	1250
598	95.871	94.949		0.16	0.16	1.32	1.06	0.36	81	81	68	2.69	1.5	72	0.043	100	101	219.5	0.10	1.32	15.46	109.30	163.51	155.60	53.97	163.27	116	69	68	68	0.009	1.001	11.047	1209
599	96.032	95.111		0.16	0.16	1.32	1.07	0.36	81	81	68	2.69	1.6	72	0.044	100	101	220.0	-0.53	1.35	15.54	109.11	163.29	155.46	53.96	163.07	116	69	68	68	0.009	1.001	11.217	1225
600	96.192	95.271		0.16	0.16	1.31	1.06	0.36	81	81	68	2.7	1.6	72	0.041	103	103	219.3	0.69	1.38	15.38	108.96	163.04	155.21	53.88	162.84	113	69	68	68	0.008	1.001	11.483	1253
601	96.353	95.432		0.16	0.16	1.32	1.07	0.36	81	81	68	2.69	1.5	72	0.043	101	101	219.8	-0.46	1.33	15.56	108.80	162.90	155.04	53.87	162.67	114	69	68	68	0.008	1.001	11.053	1204
602	96.513	95.594		0.16	0.16	1.32	1.06	0.36	81	81	68	2.69	1.6	72	0.047	96	98	219.9	-0.14	1.44	15.51	108.51	162.71	154.86	53.95	162.46	112	69	68	68	0.008	1.001	11.973	1301
603	96.674	95.755		0.16	0.16	1.32	1.06	0.36	81	81	68	2.69	1.5	72	0.046	98	98	220.0	-0.05	1.66	15.51	108.21	162.44	152.94	54.03	162.24	113	69	68	68	0.008	1.001	13.810	1496
604	96.834	95.916		0.16	0.16	1.31	1.06	0.36	81	81	68	2.69	1.5	72	0.047	96	97	219.7	0.31	1.66	15.50	107.93	161.95	152.50	53.80	161.73	112	69	68	68	0.008	1.001	13.803	1492
605	96.994	96.077		0.16	0.16	1.32	1.06	0.36	81	81	68	2.69	1.5	72	0.043	100	101	219.6	0.10	1.65	15.51	107.78	161.72	152.21	53.68	161.46	113	69	68	68	0.008	1.001	13.797	1489
606	97.155	96.238		0.16	0.16	1.31	1.06	0.36	81	81	68	2.7	1.5	72	0.040	105	105	219.9	-0.30	1.66	15.55	107.23	161.37	151.88	53.89	161.12	113	69	68	68	0.007	1.001	13.800	1482
607	97.314	96.399		0.16	0.16	1.31	1.06	0.36	81	81	68	2.69	1.5	72	0.045	97	99	219.9	0.03	1.69	15.38	107.17	161.13	151.71	53.72	160.89	110	69	68	68	0.008	1.001	14.121	1515

Elapsed Time	Particulate Sampling Data																Fuel Weight, lb		Flow, gpm		Temperature Data, oF								Stack			
	Gas Meter Cubic Feet (1)	Gas Meter Cubic Feet (2)	Gas Meter Cubic Feet (amb)	Sample Rate, cfm (1)	Sample Rate, cfm (2)	Orifice dH (1)	Orifice dH (2)	Orifice dH (amb)	Meter oF (1)	Meter oF (2)	Meter oF (amb)	Meter Vac. In. Hg. (1)	Meter Vac. In. Hg. (2)	Dilution Tunnel Temp.	Dilution Tunnel dP	Pro. Rate (%) (1)	Pro. Rate (%) (2)	Scale Reading	Weight Change	Load Side Liquid Flow Rate	Boiler Side Liquid Flow Rate (optional)	Thermopile ΔT	Boiler to Heat Exch. Temp.	Heat Exch to Boiler Temp.	Inlet Load Temp.	Outlet Load Temp.	Stack	Filter (1)	Filter (2)	Ambient		Specific Heat of Inlet Water (BTU/lb-°F)	Mass Flow Rate of Inlet Water (lb/min)	Heat Output, Btu
608	97.474	96.560		0.16	0.16	1.31	1.06	0.36	81	81	68	2.69	1.5	72	0.043	100	101	220.5	-0.63	1.64	15.54	107.05	160.94	151.43	53.63	160.68	112	69	68	68	0.008	1.001	13.641	1462
609	97.634	96.721		0.16	0.16	1.31	1.06	0.36	81	81	68	2.69	1.5	72	0.044	99	100	219.9	0.58	1.62	15.42	106.72	160.50	151.11	53.59	160.31	112	69	68	68	0.007	1.001	13.484	1441
610	97.793	96.882		0.16	0.16	1.31	1.05	0.36	81	81	68	2.72	1.6	79	0.043	100	102	219.8	0.10	1.62	15.42	106.49	160.32	150.90	53.57	160.06	139	69	69	68	0.035	1.001	13.474	1437
611	97.954	97.042		0.16	0.16	1.31	1.05	0.36	81	81	68	2.71	1.6	86	0.045	100	100	218.8	0.98	1.66	15.49	106.12	159.93	150.52	53.56	159.68	163	70	69	68	0.028	1.001	13.801	1466
612	98.114	97.201		0.16	0.16	1.32	1.05	0.36	81	81	68	2.71	1.6	89	0.041	104	104	218.7	0.10	1.62	15.41	106.01	159.87	150.41	53.56	159.57	197	70	70	68	0.036	1.001	13.479	1431
613	98.274	97.362		0.16	0.16	1.32	1.05	0.36	81	81	68	2.73	1.6	93	0.043	102	103	216.1	2.59	1.66	15.42	106.18	160.04	150.55	53.56	159.75	222	71	70	68	0.037	1.001	13.806	1468
614	98.433	97.521		0.16	0.16	1.32	1.06	0.36	81	81	68	2.73	1.6	97	0.042	103	104	215.2	0.95	1.68	15.49	106.76	160.52	151.15	53.55	160.31	240	71	70	68	0.040	1.001	13.969	1493
615	98.592	97.681		0.16	0.16	1.32	1.06	0.36	81	81	68	2.72	1.6	99	0.042	103	105	214.6	0.62	1.56	15.58	107.16	161.01	151.44	53.54	160.70	251	71	70	68	0.038	1.001	12.990	1394
616	98.751	97.841		0.16	0.16	1.31	1.05	0.36	81	81	68	2.73	1.6	101	0.044	101	102	212.4	2.19	1.58	15.43	107.87	161.75	152.11	53.54	161.41	259	72	70	68	0.039	1.001	13.150	1420
617	98.910	98.000		0.16	0.16	1.32	1.05	0.36	81	81	68	2.72	1.6	103	0.041	105	106	211.9	0.50	1.64	15.42	108.44	162.37	152.67	53.56	162.00	265	72	71	68	0.039	1.001	13.635	1480
618	99.069	98.160		0.16	0.16	1.32	1.06	0.36	81	81	68	2.72	1.6	105	0.042	104	105	210.5	1.39	1.62	15.43	109.16	162.97	153.22	53.47	162.63	270	73	71	68	0.047	1.001	13.473	1473
619	99.228	98.320		0.16	0.16	1.32	1.05	0.36	81	81	68	2.73	1.6	107	0.041	105	107	209.7	0.82	1.60	15.42	109.87	163.92	154.03	53.63	163.50	276	73	72	68	0.047	1.001	13.319	1465
620	99.387	98.478		0.16	0.16	1.31	1.05	0.36	81	81	68	2.73	1.6	108	0.041	106	105	208.7	0.97	1.67	15.42	110.82	164.81	154.86	53.60	164.42	281	74	72	68	0.041	1.001	13.962	1549
621	99.546	98.638		0.16	0.16	1.31	1.05	0.36	81	81	68	2.74	1.6	110	0.044	102	103	207.5	1.24	1.58	15.46	111.60	165.53	155.58	53.56	165.16	285	75	73	68	0.049	1.001	13.153	1470
622	99.705	98.796		0.16	0.16	1.32	1.04	0.36	81	81	68	2.74	1.6	111	0.043	103	103	205.8	1.65	1.62	15.42	112.61	166.67	156.55	53.60	166.20	291	75	74	68	0.047	1.001	13.476	1519
623	99.864	98.955		0.16	0.16	1.31	1.04	0.36	81	81	68	2.76	1.6	112	0.044	102	103	204.7	1.11	1.58	15.51	113.60	167.62	157.49	53.59	167.19	294	76	74	68	0.048	1.001	13.153	1496
624	100.022	99.114		0.16	0.16	1.31	1.04	0.36	81	81	68	2.76	1.6	111	0.041	105	106	203.7	1.06	1.66	15.39	114.68	168.65	158.42	53.56	168.24	293	77	75	68	0.047	1.001	13.807	1585
625	100.180	99.271		0.16	0.16	1.31	1.04	0.36	81	81	68	2.77	1.6	111	0.044	101	101	202.2	1.44	1.64	15.42	115.72	169.72	159.41	53.57	169.29	292	77	75	68	0.054	1.001	13.641	1580
626	100.337	99.430		0.16	0.16	1.31	1.03	0.36	81	81	68	2.78	1.7	110	0.045	100	101	200.4	1.78	1.62	15.44	116.85	170.81	160.45	53.56	170.40	292	78	76	68	0.046	1.001	13.478	1577
627	100.495	99.587		0.16	0.16	1.31	1.03	0.36	81	81	68	2.79	1.7	111	0.041	105	105	199.0	1.47	1.60	15.45	117.80	171.80	161.38	53.58	171.38	293	78	76	68	0.047	1.001	13.314	1570
628	100.653	99.744		0.16	0.16	1.29	1.02	0.36	81	81	68	2.8	1.7	110	0.042	104	104	198.4	0.59	1.62	15.51	118.83	172.87	162.33	53.59	172.42	292	79	77	68	0.048	1.001	13.475	1603
629	100.810	99.902		0.16	0.16	1.29	1.01	0.36	81	81	68	2.8	1.7	111	0.043	102	103	196.2	2.15	1.58	15.56	119.93	173.93	163.30	53.57	173.50	293	79	77	68	0.049	1.001	13.153	1579
630	100.967	100.058		0.16	0.16	1.29	1.02	0.36	81	81	68	2.81	1.7	111	0.040	106	106	194.6	1.58	1.60	15.51	120.96	174.95	164.21	53.58	174.54	295	80	78	68	0.051	1.001	13.311	1612
631	101.124	100.215		0.16	0.16	1.29	1.01	0.36	81	81	68	2.82	1.7	112	0.041	105	105	193.0	1.69	1.65	15.43	122.00	176.02	165.27	53.59	175.59	297	80	78	68	0.049	1.001	13.781	1683
632	101.280	100.370		0.16	0.16	1.29	1.00	0.36	81	81	68	2.84	1.7	113	0.043	102	101	191.8	1.21	1.66	15.48	123.04	177.06	166.23	53.57	176.61	299	81	78	68	0.047	1.001	13.829	1704
633	101.438	100.526		0.16	0.16	1.28	1.00	0.36	81	81	68	2.84	1.7	113	0.043	103	102	190.3	1.45	1.68	15.44	124.21	178.21	167.32	53.57	177.78	301	81	79	68	0.050	1.001	13.966	1737
634	101.595	100.680		0.16	0.15	1.27	1.00	0.36	81	81	68	2.85	1.7	113	0.040	106	104	188.1	2.18	1.62	15.42	125.38	179.44	168.35	53.58	178.96	302	82	79	68	0.050	1.001	13.487	1693
635	101.751	100.836		0.16	0.16	1.28	0.99	0.36	81	81	68	2.84	1.7	114	0.044	100	101	187.6	0.56	1.59	15.47	126.56	180.58	169.48	53.57	180.13	303	82	79	68	0.050	1.001	13.258	1680
636	101.908	100.990		0.16	0.15	1.27	0.99	0.36	81	81	68	2.85	1.7	112	0.043	102	101	185.5	2.11	1.63	15.46	127.57	181.64	170.37	53.59	181.16	301	82	80	68	0.048	1.001	13.632	1741
637	102.064	101.145		0.16	0.16	1.27	0.99	0.36	81	81	68	2.84	1.7	95	0.041	102	102	184.2	1.22	1.63	15.42	128.41	182.34	171.20	53.59	182.00	277	80	79	68	0.038	1.001	13.626	1752
638	102.223	101.300		0.16	0.16	1.27	0.99	0.36	81	81	68	2.86	1.7	89	0.043	101	99	183.6	0.59	1.54	14.79	128.83	182.81	171.63	53.61	182.44	255	78	78	68	0.037	1.001	12.830	1655
639	102.383	101.454		0.16	0.15	1.26	0.99	0.36	81	81	68	2.86	1.7	86	0.044	100	97	182.5	1.16	1.61	15.49	129.15	183.03	171.88	53.58	182.73	242	77	77	68	0.035	1.001	13.426	1736
640	102.544	101.610		0.16	0.16	1.26	0.98	0.36	81	81	68	2.87	1.7	84	0.043	102	99	182.1	0.43	1.54	15.43	129.54	183.44	172.26	53.59	183.13	232	77	76	68	0.035	1.001	12.829	1664
641	102.704	101.764		0.16	0.15	1.26	0.99	0.36	81	81	68	2.86	1.7	80	0.043	101	98	181.6	0.48	1.58	12.82	129.55	183.40	172.23	53.56	183.10	226	75	75	68	0.033	1.001	13.152	1706
642	102.865	101.920		0.16	0.16	1.32	0.99	0.36	81	81	68	2.9	1.7	78	0.044	100	98	181.6	-0.03	1.60	14.11	129.63	183.51	172.29	53.54	183.17	221	74	74	68	0.035	1.001	13.318	1728
643	103.023	102.074		0.16	0.15	1.32	0.99	0.36	81	81	68	2.89	1.7	78	0.042	101	99	180.8	0.77	1.62	14.01	129.71	183.61	172.49	53.63	183.34	216	74	74	68	0.034	1.001	13.474	1750
644	103.181	102.230		0.16	0.16	1.32	0.99	0.36	81	81	68	2.87	1.7	77	0.046	96	96	181.4	-0.53	1.60	12.82	129.74	183.62	172.41	53.61	183.34	212	74	73	68	0.033	1.001	13.319	1730
645	103.338	102.385		0.16	0.16	1.32	1.00	0.36	81	81	68	2.86	1.7	76	0.043	99	98	180.7	0.64	1.56	14.18	129.81	183.73	172.50	53.57	183.39	209	73	72	68	0.033	1.001	12.989	1688
646	103.496	102.542		0.16	0.16	1.33	1.00	0.36	81	81	68	2.86	1.7	76	0.041	102	102	180.1	0.63	1.58	11.7170296	129.57	183.48	172.22	53.58	183.15	206	73	71	68	0.032	1.001	13.153	1706
647	103.654	102.697		0.16	0.16	1.27	1.00	0.36	81	81	68	2.78	1.7	74	0.045	97	96	180.0	0.12	1.60	11.6163807	129.61	183.49	172.30	53.54	183.16	205	72	70	68	0.031	1.001	13.316	1728
648	103.813	102.853		0.16	0.16	1.27	1.00	0.36	81	81	68	2.79	1.7	73	0.045	98	96	180.1	-0.13	1.64	12.1451368	129.54	183.39	172.24	53.56	183.10	204	71	69	68	0.034	1.001	13.635	1768
649	103.971	103.009		0.16	0.16	1.28	1.01	0.36	81	81	68	2.78	1.7	73	0.043	99	98	179.8	0.32	1.60	14.527813	129.48	183.37	172.18	53.57	183.05	203	71	68	68	0.036	1.001	13.316	1726
650	104.129	103.167		0.16	0.16	1.28	1.01	0.36	81	81	68	2.77	1.7	73	0.044	98	99	179.7	0.07	1.56	15.4373322	129.32	183.17	171.93	53.54	182.86	201	70	68	68	0.037	1.001	12.984	1681
651	104.287	103.323		0.16	0.16	1.28	1.01	0.36	81	81	68	2.77	1.7	73	0.045	97	96	180.2	-0.51	1.60	11.8572235	129.20	183.07	171.89	53.55	182.75	199	69	68	68	0.036	1.001	13.316	1722
652	104.445	103.481		0.16	0.16	1.28	1.01	0.36	81	81	68	2.75	1.7	73	0.044	98	99	180.1	0.12	1.62	12.8772593	129.06	182.95	171.76	53.56	182.62	196	69	68	68	0.036	1.001	13.477	1741
653	104.604	103.637		0.16	0.16	1.28	1.01	0.36	81	81	68	2.76	1.7	73	0.046	96	95	179.8	0.26	1.60	14.1237555	129.01	182.90	171.75	53.56	182.57	194	68	67	68	0.035	1.001	13.312	1719
654	104.763	103.795		0.16	0.16	1.28	1.02	0.36	81	81	68	2.74	1.7	73	0.043	100	100	179.6	0.21	1.62	14.0943794	128.80	182.59	171.49	53.51	182.30	192	68	67	68	0.034	1.001	13.471	1737
655	104.922	103.952		0.16	0.16	1.29	1.02	0.36	81	81	68	2.73	1.6	73	0.045	98	97	179.7	-0.10	1.54	13.03193	128.71	182.56	171.42	53.55	182.26	191	68	67	68	0.034	1.001	12.827	1653
656	105.082	104.110		0.16	0.16	1.29	1.02	0.36	81	81	68	2.73	1.6	73	0.041	103	102	179.1	0.60	1.60	14.236084	128.50	182.31	171.28	53.56	182.06	189	68	68	68	0.033	1.001	13.317	1713
657	105.241	104.269		0.16	0.16	1.29	1.03	0.36	81	81	68	2.73	1.6	73	0.044	99	99	179.3	-0.17	1.44	12.8911171	128.41	182.30	171.50	53.57	181.98	185	68	68	68	0.032	1.001	12.016	1545
658	105.400	104.426		0.16	0.16	1.30	1.03	0.36	81	81	68	2.73	1.6	72	0.044	99	98	179.2	0.13	1.64	15.39328	128.19	182.06	170.97	53.58	181.77	184	68	68	68	0.032	1.001	13.639	1750
659	105.559	104.586		0.16	0.16	1.29	1.03	0.36	81	81	68	2.71	1.6	72	0.041	102	103	179.7	-0.48	1.38	14.1885843	128.11	182.00	172.75	53.51	181.62	181	68	68	68	0.030	1.001	11.535	1480
660	105.719	104.744		0.16	0.16	1.29	1.03	0.36	81	81	68	2.72	1.6	73	0.041	103	102	179.3	0.33	1.33	11.8661661	128.11	182.04	172.94	53.63	181.75	179	68	68	68	0.030	1.001	11.054	1418
661	105.878	104.903		0.16	0.16	1.30	1.03	0.36	81	81	68	2.7	1.6	72	0.044	99	99	179.2	0.15	1.34	13.1454124	127.93	181.99	172.85	53.68	181.62	178	68	68	68	0.029	1.001	11.212	1436
662	106.038	105.063		0.16	0.16	1.30	1.04	0.36	81	81	68	2.71	1.6	73	0.044	99	100	179.2	-0.01	1.31	14.3599854	127.69	181.72	172.62	53.71	181.41	175	68	68	68	0.028	1.001	10.892	1392
663	106.198	105.222		0.16	0.16	1.30	1.04	0.36	81	81	68	2.69	1.6	72	0.046	97	97	179.1	0.12	1.35	11.5969591	127.74	181.63	172.62	53.64	181.38	172	68	68	68	0.028	1.001	11.215	1434
664	106.357	105.382		0.16	0.16	1.31	1.05	0.36	81	81	68	2.7	1.6	72	0.042	101	102	179.6	-0.52	1.42	14.1307507	127.48	181.55	172.56	53.81	181.29	172	68	68	68	0.028	1.001	11.861	1514
665	106.517	105.542		0.16	0.16	1.31	1.05	0.36	81	81	68	2.7	1.6	72	0.045	98	99	178.8	0.76	1.38	13.0886679	127.32	181.44	172.37	53.79	181.11	170	68	68	68	0.027	1.001	11.538	1471
666	106.677	105.701		0.16	0.16	1.31	1.05	0.36	81	81	68	2.69	1.6	72	0.044	99	99	179.1	-0.26	1.34	14.125596	127.23	181.32	172.32	53.83	181.06	169	68	68	68	0.027	1.001	11.212	1428
667	106.837	105.862		0.16	0.16	1.31	1.06	0.36	81	81	68	2.68	1.6	72	0.043	100	101	179.3	-0.18	1.33	12.8974171	127.04	181.15	172.21	53.87	180.91	168	68	68	68	0.026	1.001	11.052	1406
668	106.997	106.023		0.16	0.16	1.31	1.06	0.36	81	81	68	2.69	1.6	72	0.039	105	107	179.7	-0.41	1.35	12.9074841	126.79	180.95	172.00	53.87	180.66	166	68	68	68	0.026	1.001	11.218	1424
669	107.157	106.183		0.16	0.16	1.31	1.06	0.36	81	81	68	2.68	1.5	72	0.044	99	100	179.3	0.37	1.33	10.8459721	126.69	180.82	171.87	53.84	180.53	165	68	68	68	0.025	1.001	11.058	1403

Elapsed Time	Particulate Sampling Data																	Fuel Weight, lb		Flow, gpm		Temperature Data, oF									Stack			
	Gas Meter Cubic Feet (1)	Gas Meter Cubic Feet (2)	Gas Meter Cubic Feet (amb)	Sample Rate, cfm (1)	Sample Rate, cfm (2)	Orifice dH (1)	Orifice dH (2)	Orifice dH (amb)	Meter oF (1)	Meter oF (2)	Meter oF (amb)	Meter Vac. In. Hg. (1)	Meter Vac. In. Hg. (2)	Dilution Tunnel Temp.	Dilution Tunnel dP	Pro. Rate (%) (1)	Pro. Rate (%) (2)	Scale Reading	Weight Change	Load Side Liquid Flow Rate	Boiler Side Liquid Flow Rate (optional)	Thermopile ΔT	Boiler to Heat Exch. Temp.	Heat Exch to Boiler Temp.	Inlet Load Temp.	Outlet Load Temp.	Stack	Filter (1)	Filter (2)	Ambient		Specific Heat of Inlet Water (BTU/lb-°F)	Mass Flow Rate of Inlet Water (lb/min)	Heat Output, Btu
670	107.317	106.344		0.16	0.16	1.31	1.06	0.36	81	81	68	2.69	1.5	72	0.043	100	101	179.5	-0.24	1.34	14.399663	126.60	180.77	171.78	53.85	180.45	164	68	68	68	0.025	1.001	11.213	1421
671	107.476	106.505		0.16	0.16	1.31	1.06	0.36	81	81	68	2.69	1.5	72	0.040	103	105	179.2	0.38	1.31	12.8990002	126.39	180.54	171.60	53.89	180.28	163	68	68	68	0.024	1.001	10.891	1378
672	107.635	106.666		0.16	0.16	1.31	1.06	0.36	81	81	68	2.68	1.6	72	0.043	100	101	179.3	-0.16	1.29	14.1353941	126.44	180.53	171.58	53.82	180.26	161	68	68	68	0.024	1.001	10.725	1358
673	107.795	106.827		0.16	0.16	1.31	1.06	0.36	81	81	68	2.68	1.6	72	0.043	100	101	179.4	-0.08	1.38	15.39328	126.06	180.31	171.34	53.93	179.99	160	68	68	68	0.024	1.001	11.536	1456
674	107.955	106.988		0.16	0.16	1.30	1.06	0.36	81	81	68	2.69	1.6	72	0.044	99	100	179.1	0.25	1.21	14.1405725	126.02	180.20	171.21	53.89	179.91	160	68	68	68	0.024	1.001	10.088	1273
675	108.114	107.149		0.16	0.16	1.31	1.06	0.36	81	81	68	2.7	1.6	72	0.045	97	99	179.4	-0.21	1.44	14.1402273	125.93	180.09	171.05	53.83	179.76	160	68	68	68	0.023	1.001	12.030	1517
676	108.274	107.309		0.16	0.16	1.31	1.02	0.36	81	81	68	2.7	1.5	72	0.043	100	101	179.4	-0.02	1.40	15.3934107	125.68	179.80	170.08	53.84	179.53	159	68	68	68	0.022	1.001	11.704	1473
677	108.434	107.466		0.16	0.16	1.31	1.02	0.36	81	81	68	2.68	1.5	72	0.042	102	100	179.5	-0.14	1.48	15.458416	125.52	179.60	169.88	53.78	179.30	156	68	68	68	0.022	1.001	12.354	1553
678	108.594	107.625		0.16	0.16	1.31	1.02	0.36	81	81	68	2.7	1.5	72	0.045	98	98	179.0	0.52	1.54	15.411581	125.35	179.45	169.71	53.77	179.13	156	68	68	68	0.022	1.001	12.831	1610
679	108.754	107.782		0.16	0.16	1.31	1.02	0.36	81	81	68	2.7	1.5	72	0.044	99	98	179.0	0.04	1.40	13.1648617	125.02	179.27	169.84	53.87	178.89	155	68	68	68	0.021	1.001	11.702	1465
680	108.914	107.941		0.16	0.16	1.31	1.02	0.36	81	81	68	2.69	1.5	72	0.041	103	103	178.9	0.04	1.50	15.5172777	124.99	179.06	169.34	53.80	178.79	153	68	68	68	0.021	1.001	12.510	1566
681	109.074	108.098		0.16	0.16	1.31	1.02	0.36	81	81	68	2.69	1.5	72	0.044	99	98	179.4	-0.46	1.46	14.1785059	124.81	178.61	168.89	53.58	178.39	153	68	68	68	0.021	1.001	12.184	1523
682	109.233	108.256		0.16	0.16	1.30	1.02	0.36	81	81	68	2.68	1.5	72	0.046	96	96	179.6	-0.18	1.42	14.2148218	124.49	178.48	168.85	53.76	178.25	152	68	68	68	0.020	1.001	11.863	1479
683	109.393	108.415		0.16	0.16	1.32	1.02	0.36	81	81	68	2.68	1.5	72	0.044	99	99	179.4	0.14	1.46	15.4900084	124.42	178.33	168.72	53.70	178.12	154	68	68	68	0.020	1.001	12.190	1519
684	109.553	108.572		0.16	0.16	1.31	1.03	0.36	81	81	68	2.69	1.5	71	0.044	99	98	178.7	0.68	1.49	15.5081358	124.09	178.10	168.45	53.74	177.84	150	68	68	68	0.020	1.001	12.386	1539
685	109.712	108.731		0.16	0.16	1.31	1.02	0.36	81	81	68	2.7	1.5	71	0.044	98	99	179.1	-0.39	1.50	15.5176878	124.09	177.94	168.24	53.59	177.68	149	68	68	68	0.019	1.001	12.515	1555
686	109.872	108.888		0.16	0.16	1.31	1.02	0.36	81	81	68	2.68	1.5	71	0.049	94	93	179.0	0.12	1.43	15.4614649	123.87	177.82	168.04	53.62	177.49	150	68	68	68	0.019	1.001	11.955	1483
687	110.032	109.046		0.16	0.16	1.30	1.02	0.36	81	81	68	2.69	1.5	71	0.043	100	99	179.2	-0.14	1.46	15.4214468	123.57	177.59	167.87	53.70	177.27	147	68	68	68	0.019	1.001	12.191	1508
688	110.191	109.204		0.16	0.16	1.31	1.02	0.36	81	81	68	2.69	1.5	71	0.043	100	99	179.1	0.03	1.45	15.4904156	123.35	177.36	167.70	53.74	177.10	148	68	68	68	0.018	1.001	12.061	1490
689	110.351	109.362		0.16	0.16	1.30	1.02	0.36	81	81	68	2.69	1.5	71	0.043	100	99	179.3	-0.14	1.46	15.4409647	123.11	177.06	167.44	53.69	176.80	148	68	68	68	0.018	1.001	12.194	1503
690	110.510	109.520		0.16	0.16	1.31	1.02	0.36	81	81	68	2.68	1.5	71	0.045	97	97	179.2	0.06	1.48	15.4227171	122.92	176.85	167.22	53.64	176.55	147	68	68	68	0.018	1.001	12.346	1519
691	110.670	109.678		0.16	0.16	1.31	1.02	0.36	81	81	68	2.69	1.5	71	0.043	100	99	179.8	-0.54	1.48	15.4702988	122.74	176.60	167.03	53.61	176.35	144	68	68	68	0.018	1.001	12.362	1519
692	110.831	109.836		0.16	0.16	1.31	1.02	0.36	81	81	68	2.7	1.5	71	0.046	98	96	178.9	0.85	1.46	15.3934889	122.64	176.46	166.85	53.56	176.20	144	68	68	68	0.017	1.001	12.179	1495
693	110.991	109.994		0.16	0.16	1.31	1.02	0.36	81	81	68	2.68	1.5	71	0.046	97	96	179.3	-0.40	1.47	15.4315968	122.27	176.24	166.62	53.66	175.93	144	68	68	68	0.017	1.001	12.229	1497
694	111.151	110.151		0.16	0.16	1.31	1.02	0.36	81	81	68	2.68	1.5	71	0.041	103	101	178.7	0.57	1.46	15.4615479	122.05	176.03	166.42	53.69	175.74	141	68	68	68	0.017	1.001	12.180	1488
695	111.310	110.310		0.16	0.16	1.31	1.02	0.36	81	81	68	2.7	1.5	71	0.044	98	99	179.3	-0.52	1.50	15.3563852	121.72	175.72	166.18	53.74	175.46	140	68	68	68	0.017	1.001	12.471	1520
696	111.470	110.467		0.16	0.16	1.31	1.03	0.36	81	81	68	2.69	1.5	71	0.046	97	96	179.2	0.03	1.46	15.384901	121.51	175.47	165.92	53.69	175.20	139	68	68	68	0.016	1.001	12.186	1483
697	111.630	110.626		0.16	0.16	1.31	1.02	0.36	81	81	68	2.7	1.5	71	0.046	97	97	179.4	-0.15	1.45	15.3468456	121.30	175.27	165.81	53.72	175.01	138	68	68	68	0.016	1.001	12.109	1471
698	111.789	110.783		0.16	0.16	1.31	1.02	0.36	81	81	68	2.69	1.5	72	0.043	100	99	179.1	0.22	1.44	15.528492	121.04	174.98	165.48	53.67	174.71	139	68	68	68	0.016	1.001	12.019	1456
699	111.949	110.941		0.16	0.16	1.30	1.02	0.36	81	81	68	2.68	1.5	72	0.043	100	100	179.5	-0.39	1.48	15.4894714	120.84	174.79	165.35	53.69	174.53	137	68	68	68	0.016	1.001	12.318	1490
700	112.109	111.100		0.16	0.16	1.31	1.02	0.36	81	81	68	2.69	1.5	71	0.044	99	99	179.5	0.06	1.44	15.4343863	120.61	174.57	165.14	53.72	174.33	138	68	68	68	0.015	1.001	12.019	1451
701	112.268	111.257		0.16	0.16	1.31	1.03	0.36	81	81	68	2.68	1.5	72	0.043	100	99	179.3	0.19	1.46	15.4900465	120.24	174.27	164.85	53.80	174.04	136	68	68	68	0.015	1.001	12.184	1467
702	112.428	111.416		0.16	0.16	1.31	1.02	0.36	81	81	68	2.67	1.5	71	0.044	99	99	179.5	-0.24	1.48	15.4319525	120.19	174.16	164.77	53.69	173.88	135	68	68	68	0.015	1.001	12.352	1486
703	112.587	111.573		0.16	0.16	1.31	1.02	0.36	81	81	68	2.68	1.5	71	0.043	100	99	179.0	0.51	1.42	15.4231844	119.89	173.90	164.42	53.69	173.59	134	68	68	68	0.014	1.001	11.867	1424
704	112.747	111.732		0.16	0.16	1.32	1.02	0.36	81	81	68	2.67	1.5	72	0.043	100	100	178.8	0.18	1.44	15.5664234	119.75	173.68	164.32	53.69	173.44	135	68	68	68	0.014	1.001	12.034	1443
705	112.907	111.889		0.16	0.16	1.32	1.02	0.36	81	81	68	2.68	1.5	71	0.044	99	98	178.2	0.59	1.46	15.4994659	119.54	173.40	164.08	53.67	173.21	133	68	68	68	0.014	1.001	12.193	1459
706	113.067	112.047		0.16	0.16	1.31	1.02	0.36	81	81	68	2.68	1.5	71	0.045	98	97	178.9	-0.67	1.46	15.5667362	119.16	173.14	163.74	53.69	172.86	133	68	68	68	0.014	1.001	12.193	1455
707	113.227	112.205		0.16	0.16	1.30	1.01	0.36	81	81	68	2.69	1.5	87	0.045	99	99	179.4	-0.49	1.44	15.4900761	119.05	172.95	163.95	53.66	172.71	154	69	69	68	0.038	1.001	12.025	1433
708	113.387	112.362		0.16	0.16	1.31	1.01	0.36	81	81	68	2.69	1.5	73	0.042	102	100	179.0	0.45	1.50	15.4613924	118.81	172.71	163.50	53.68	172.48	149	69	69	68	0.022	1.001	12.514	1489
709	113.547	112.520		0.16	0.16	1.32	1.02	0.36	81	81	68	2.67	1.5	71	0.046	97	96	178.9	0.04	1.54	15.5179949	118.59	172.56	163.22	53.66	172.25	146	68	68	68	0.019	1.001	12.839	1525
710	113.706	112.677		0.16	0.16	1.32	1.03	0.36	81	81	68	2.68	1.5	71	0.043	100	99	178.5	0.37	1.48	15.3362541	118.43	172.32	163.06	53.65	172.07	144	68	68	68	0.017	1.001	12.355	1465
711	113.866	112.836		0.16	0.16	1.31	1.03	0.36	81	81	68	2.68	1.5	71	0.042	101	101	178.8	-0.25	1.44	15.4592247	118.28	172.05	162.85	53.57	171.84	141	68	68	68	0.016	1.001	12.032	1425
712	114.026	112.994		0.16	0.16	1.31	1.03	0.36	81	81	68	2.67	1.5	71	0.041	103	102	178.9	-0.10	1.48	15.4780464	117.79	171.81	162.57	53.77	171.56	140	68	68	68	0.015	1.001	12.357	1457
713	114.186	113.151		0.16	0.16	1.31	1.02	0.36	81	81	68	2.66	1.5	71	0.041	103	101	178.7	0.23	1.42	15.432045	117.71	171.63	162.46	53.67	171.38	136	68	68	68	0.015	1.001	11.866	1398
714	114.345	113.310		0.16	0.16	1.30	1.02	0.36	81	81	68	2.67	1.5	71	0.042	101	101	178.6	0.11	1.52	15.4414492	117.42	171.40	162.28	53.81	171.23	135	68	68	68	0.014	1.001	12.671	1490
715	114.505	113.468		0.16	0.16	1.31	1.02	0.36	81	81	68	2.66	1.5	71	0.045	98	97	178.8	-0.22	1.38	15.5372057	117.29	171.10	161.98	53.63	170.92	133	68	68	68	0.014	1.001	11.540	1355
716	114.665	113.626		0.16	0.16	1.32	1.03	0.36	81	81	68	2.66	1.5	71	0.047	96	95	177.9	0.87	1.52	15.5864859	116.84	170.87	161.70	53.75	170.59	131	68	68	68	0.014	1.001	12.667	1482
717	114.825	113.784		0.16	0.16	1.31	1.02	0.36	81	81	68	2.66	1.5	71	0.043	100	99	178.4	-0.48	1.42	15.4892216	116.73	170.64	161.49	53.69	170.42	133	68	68	68	0.013	1.001	11.861	1386
718	114.985	113.942		0.16	0.16	1.31	1.02	0.36	81	81	68	2.66	1.5	71	0.046	97	96	178.4	0.00	1.50	15.4320183	116.55	170.44	161.36	53.64	170.18	130	68	68	68	0.013	1.001	12.508	1460
719	115.146	114.100		0.16	0.16	1.31	1.02	0.36	81	81	68	2.67	1.5	71	0.047	96	95	178.1	0.29	1.46	15.4891768	116.20	170.17	161.06	53.73	169.93	130	68	68	68	0.012	1.001	12.189	1418
720	115.306	114.257		0.16	0.16	1.31	1.03	0.36	81	81	68	2.66	1.5	71	0.045	98	97	178.9	-0.77	1.48	15.4521284	116.05	169.99	160.93	53.71	169.75	127	68	68	68	0.012	1.001	12.354	1435
721	115.465	114.417		0.16	0.16	1.31	1.02	0.36	81	81	68	2.66	1.5	71	0.043	100	101	178.7	0.19	1.42	15.3558416	115.81	169.73	160.65	53.68	169.50	125	68	68	68	0.011	1.001	11.867	1376
722	115.625	114.574		0.16	0.16	1.31	1.03	0.36	81	81	68	2.65	1.5	71	0.043	100	99	178.5	0.13	1.44	15.4644442	115.46	169.41	160.47	53.75	169.21	126	68	68	68	0.011	1.001	12.029	1390
723	115.785	114.732		0.16	0.16	1.31	1.03	0.36	81	81	68	2.67	1.5	71	0.044	99	98	178.2	0.31	1.44	15.4831486	115.26	169.25	160.19	53.73	168.99	124	68	68	68	0.011	1.001	12.027	1388
724	115.944	114.890		0.16	0.16	1.32	1.02	0.36	81	81	68	2.65	1.5	71	0.046	96	96	178.5	-0.25	1.42	15.5465288	115.09	169.01	160.01	53.69	168.78	124	68	68	68	0.011	1.001	11.868	1367
725	116.104	115.048		0.16	0.16	1.32	1.03	0.36	81	81	68	2.66	1.5	71	0.043	100	99	178.7	-0.21	1.40	15.4789743	114.81	168.76	159.80	53.71	168.52	124	68	68	68	0.011	1.001	11.707	1346
726	116.264	115.207		0.16	0.16	1.31	1.02	0.36	81	81	68	2.67	1.5	71	0.044	99	99	178.8	-0.08	1.46	15.3848286	114.66	168.58	159.57	53.67	168.33	124	68	68	68	0.011	1.001	12.184	1399
727	116.424	115.364		0.16	0.16	1.31	1.03	0.36	81	81	68	2.67	1.5	71	0.040	104	102	178.8	0.01	1.44	15.4774876	114.38	168.28	159.30	53.66	168.04	122	68	68	68	0.011	1.001	12.028	1377
728	116.584	115.522		0.16	0.16	1.31	1.03	0.36	81	81	68	2.66	1.5	71	0.040	104	103	178.6	0.12	1.42	15.4325495	114.32	168.04	159.12	53.52	167.84	121	68	68	68	0.011	1.001	11.871	1359
729	116.744	115.681		0.16	0.16	1.31	1.02	0.36	81	81	68	2.65	1.5	71	0.046	97	97	178.5	0.10	1.48	15.4700098	113.74	167.84	158.85	53.79	167.53	121	68	68	68	0.010	1.001	12.352	1407
730	116.903	115.838		0.16	0.16	1.32	1.02	0.36	81	81	68	2.65	1.5	71	0.048	94	94	179.0	-0.51	1.42	15.5568228	113.58	167.52	158.60	53.71	167.29	120	68	68	68	0.010	1.001	11.862	1349
731	117.063	115.997		0.16	0.16	1.31	1.02	0.36	81	81	68	2.66	1.5	71	0.046	97	97	178.7	0.31	1.46	15.4519815	113.48	167.34	158.38	53.59	167.07	118	68	68	68	0.010	1.001	12.188	1385

Elapsed Time	Particulate Sampling Data																	Fuel Weight, lb		Flow, gpm		Temperature Data, oF									Stack			
	Gas Meter Cubic Feet (1)	Gas Meter Cubic Feet (2)	Gas Meter Cubic Feet (amb)	Sample Rate, cfm (1)	Sample Rate, cfm (2)	Orifice dH (1)	Orifice dH (2)	Orifice dH (amb)	Meter oF (1)	Meter oF (2)	Meter oF (amb)	Meter Vac. In. Hg. (1)	Meter Vac. In. Hg. (2)	Dilution Tunnel Temp.	Dilution Tunnel dP	Pro. Rate (%) (1)	Pro. Rate (%) (2)	Scale Reading	Weight Change	Load Side Liquid Flow Rate	Boiler Side Liquid Flow Rate (optional)	Thermopile ΔT	Boiler to Heat Exch. Temp.	Heat Exch to Boiler Temp.	Inlet Load Temp.	Outlet Load Temp.	Stack	Filter (1)	Filter (2)	Ambient		Specific Heat of Inlet Water (BTU/lb-°F)	Mass Flow Rate of Inlet Water (lb/min)	Heat Output, Btu
732	117.224	116.155		0.16	0.16	1.32	1.02	0.36	81	81	68	2.66	1.5	71	0.045	99	97	178.3	0.44	1.48	15.5371971	113.21	167.13	158.20	53.66	166.86	118	68	68	68	0.010	1.001	12.350	1400
733	117.384	116.313		0.16	0.16	1.31	1.03	0.36	81	81	68	2.66	1.5	71	0.044	99	98	178.6	-0.32	1.50	15.4793577	112.97	166.85	157.94	53.60	166.57	120	68	68	68	0.010	1.001	12.508	1415
734	117.544	116.471		0.16	0.16	1.32	1.02	0.36	81	81	68	2.67	1.5	70	0.046	97	96	178.7	-0.05	1.40	15.5465736	112.72	166.62	157.82	53.70	166.42	117	68	68	68	0.009	1.001	11.703	1321
735	117.703	116.629		0.16	0.16	1.32	1.03	0.36	81	81	68	2.67	1.5	70	0.041	102	102	178.9	-0.28	1.50	15.4613247	112.46	166.32	157.52	53.65	166.11	117	68	68	68	0.009	1.001	12.536	1412
736	117.863	116.787		0.16	0.16	1.31	1.03	0.36	81	81	68	2.67	1.5	70	0.045	98	97	178.8	0.18	1.52	15.4995136	112.20	166.13	157.27	53.65	165.86	117	68	68	68	0.009	1.001	12.678	1424
737	118.023	116.945		0.16	0.16	1.31	1.03	0.36	81	81	68	2.65	1.5	70	0.044	99	98	178.6	0.15	1.44	15.4616852	111.99	165.94	157.09	53.66	165.64	117	68	68	68	0.009	1.001	11.992	1345
738	118.182	117.103		0.16	0.16	1.30	1.01	0.36	81	81	68	2.68	1.5	83	0.048	95	95	179.1	-0.52	1.42	15.4877119	111.75	165.66	156.85	53.66	165.41	143	69	69	68	0.034	1.001	11.869	1328
739	118.342	117.260		0.16	0.16	1.31	1.03	0.36	81	81	68	2.66	1.5	72	0.044	99	98	178.7	0.46	1.46	15.4702196	111.45	165.33	156.52	53.64	165.09	140	68	68	68	0.017	1.001	12.194	1361
740	118.502	117.418		0.16	0.16	1.31	1.03	0.36	81	81	68	2.65	1.5	70	0.046	97	96	178.3	0.33	1.41	15.4699173	111.29	165.23	156.40	53.66	164.95	136	68	68	68	0.015	1.001	11.784	1313
741	118.662	117.577		0.16	0.16	1.32	1.02	0.36	81	81	68	2.67	1.5	70	0.047	96	96	178.5	-0.19	1.48	15.4030085	111.13	164.90	156.18	53.58	164.71	133	68	68	68	0.014	1.001	12.309	1370
742	118.822	117.734		0.16	0.16	1.31	1.03	0.36	81	81	68	2.66	1.5	70	0.047	96	94	178.5	0.04	1.46	15.4798203	110.79	164.55	155.86	53.58	164.36	131	68	68	68	0.013	1.001	12.151	1348
743	118.981	117.894		0.16	0.16	1.31	1.02	0.36	81	81	67	2.66	1.5	70	0.046	96	97	178.1	0.43	1.50	15.4777222	110.57	164.46	155.70	53.64	164.22	129	68	68	67	0.012	1.001	12.544	1389
744	119.141	118.051		0.16	0.16	1.31	1.03	0.36	81	81	68	2.66	1.5	70	0.045	98	97	178.3	-0.24	1.50	15.4613113	110.16	164.19	155.48	53.82	163.99	125	68	68	68	0.011	1.001	12.518	1381
745	119.302	118.209		0.16	0.16	1.32	1.03	0.36	81	81	68	2.64	1.5	70	0.045	99	97	178.1	0.16	1.48	15.4796886	110.17	163.88	155.27	53.55	163.71	124	68	68	68	0.011	1.001	12.353	1363
746	119.462	118.367		0.16	0.16	1.32	1.03	0.36	81	81	68	2.66	1.5	70	0.043	100	99	178.1	0.06	1.47	15.4903193	109.76	163.75	155.08	53.71	163.47	122	68	68	68	0.011	1.001	12.258	1347
747	119.622	118.525		0.16	0.16	1.32	1.03	0.36	81	81	68	2.65	1.5	70	0.045	98	97	178.3	-0.26	1.44	15.4030056	109.67	163.49	154.90	53.62	163.29	122	68	68	68	0.010	1.001	12.048	1323
748	119.781	118.684		0.16	0.16	1.32	1.03	0.36	81	81	68	2.66	1.5	70	0.042	101	101	179.0	-0.63	1.23	15.4994593	109.39	163.25	154.97	53.60	163.00	121	68	68	68	0.010	1.001	10.231	1121
749	119.940	118.841		0.16	0.16	1.32	1.02	0.36	81	81	68	2.65	1.5	70	0.045	97	97	178.0	0.97	3.65	15.528327	108.55	163.11	147.08	53.86	162.41	120	68	68	68	0.010	1.001	30.449	3309
750	120.098	118.999		0.16	0.16	1.31	1.03	0.36	81	81	68	2.64	1.5	70	0.040	103	103	178.5	-0.54	4.30	15.441061	106.17	160.88	138.65	53.16	159.33	118	68	68	68	0.009	1.001	35.817	3807
751	120.258	119.158		0.16	0.16	1.31	1.01	0.36	81	81	68	2.67	1.5	77	0.041	103	103	177.8	0.73	3.72	15.3847971	105.32	159.99	136.02	52.64	157.96	142	68	68	68	0.035	1.001	31.058	3275
752	120.417	119.314		0.16	0.16	1.31	1.02	0.36	81	81	68	2.68	1.5	85	0.044	100	98	176.7	1.08	1.66	15.4798126	107.24	160.42	150.47	52.59	159.82	167	70	69	68	0.032	1.001	13.845	1486
753	120.576	119.472		0.16	0.16	1.31	1.02	0.36	81	81	68	2.69	1.5	89	0.043	101	101	175.8	0.94	1.61	15.3754425	108.04	161.34	151.47	52.95	160.99	203	70	69	68	0.037	1.001	13.389	1448
754	120.735	119.628		0.16	0.16	1.31	1.02	0.36	81	81	68	2.68	1.5	94	0.043	102	100	174.6	1.20	1.66	15.5311508	107.83	161.33	151.52	53.18	161.01	229	70	70	68	0.038	1.001	13.840	1494
755	120.894	119.786		0.16	0.16	1.31	1.02	0.36	81	81	68	2.69	1.6	99	0.041	105	105	173.7	0.88	1.67	15.5954151	107.99	161.76	152.01	53.45	161.44	248	71	70	68	0.040	1.001	13.952	1508
756	121.053	119.942		0.16	0.16	1.31	1.02	0.36	81	81	68	2.68	1.5	101	0.044	101	100	172.6	1.07	1.69	15.4796782	108.39	162.41	152.69	53.73	162.12	258	71	70	68	0.045	1.001	14.054	1525
757	121.212	120.100		0.16	0.16	1.32	1.02	0.36	81	81	68	2.69	1.6	104	0.041	105	105	171.5	1.07	1.62	15.4613705	108.94	163.21	153.44	53.94	162.88	264	72	70	68	0.041	1.001	13.469	1469
758	121.371	120.256		0.16	0.16	1.31	1.02	0.36	81	81	69	2.68	1.6	106	0.040	107	105	170.5	1.08	1.60	15.490118	109.43	163.88	154.16	54.09	163.52	268	72	71	69	0.042	1.001	13.299	1457
759	121.529	120.413		0.16	0.16	1.32	1.02	0.36	81	81	69	2.68	1.6	108	0.040	106	106	169.7	0.79	1.63	15.5465965	110.10	164.67	155.04	54.19	164.30	272	73	71	69	0.043	1.001	13.627	1502
760	121.687	120.569		0.16	0.16	1.31	1.02	0.36	81	81	69	2.69	1.6	110	0.041	105	104	168.2	1.49	1.52	15.4320517	111.07	165.62	156.15	54.19	165.26	276	73	72	69	0.043	1.001	12.651	1407
761	121.845	120.725		0.16	0.16	1.31	1.01	0.36	81	81	69	2.69	1.6	112	0.043	103	102	167.6	0.56	1.59	15.4172821	111.93	166.71	157.53	54.37	166.30	281	74	72	69	0.044	1.001	13.297	1490
762	122.003	120.881		0.16	0.16	1.30	1.01	0.36	81	81	69	2.7	1.6	114	0.044	102	101	166.5	1.12	1.61	15.3935661	112.71	167.62	157.97	54.50	167.21	285	75	73	69	0.043	1.001	13.453	1518
763	122.162	121.037		0.16	0.16	1.30	1.01	0.36	81	81	70	2.71	1.6	116	0.043	104	102	165.0	1.52	1.48	15.4805975	113.77	168.66	159.56	54.53	168.30	290	76	74	70	0.041	1.001	12.323	1404
764	122.320	121.193		0.16	0.16	1.30	1.01	0.36	81	81	70	2.71	1.6	117	0.044	102	101	163.5	1.44	1.61	15.4793062	114.89	169.80	160.46	54.50	169.39	294	76	74	70	0.042	1.001	13.449	1547
765	122.477	121.349		0.16	0.16	1.30	1.01	0.36	81	81	70	2.71	1.6	118	0.039	108	108	162.7	0.80	1.56	15.4995155	115.98	171.02	161.48	54.62	170.60	296	77	75	70	0.050	1.001	12.986	1508
766	122.634	121.504		0.16	0.16	1.29	1.00	0.36	81	81	71	2.71	1.6	117	0.041	105	104	161.2	1.56	1.58	15.5668373	117.11	172.17	162.18	54.64	171.75	294	78	76	71	0.050	1.001	13.148	1542
767	122.791	121.661		0.16	0.16	1.29	1.03	0.36	81	81	71	2.71	1.7	118	0.045	100	101	159.6	1.59	1.56	15.4900894	118.15	173.24	163.41	54.66	172.81	297	79	77	71	0.050	1.001	12.984	1536
768	122.949	121.818		0.16	0.16	1.29	1.03	0.36	81	81	71	2.71	1.7	116	0.040	107	107	158.1	1.47	1.52	15.5750809	119.44	174.48	164.97	54.62	174.06	294	79	77	71	0.050	1.001	12.641	1512
769	123.109	121.975		0.16	0.16	1.29	1.03	0.36	81	81	71	2.75	1.7	117	0.041	107	106	156.9	1.27	1.50	15.413929	120.65	175.68	165.85	54.63	175.27	294	80	78	71	0.043	1.001	12.479	1507
770	123.270	122.133		0.16	0.16	1.28	1.03	0.36	81	81	71	2.75	1.7	117	0.045	103	101	155.7	1.12	1.54	15.4419308	121.60	176.69	166.66	54.67	176.27	295	81	78	71	0.049	1.001	12.804	1559
771	123.429	122.290		0.16	0.16	1.28	1.03	0.36	81	81	72	2.76	1.7	118	0.042	105	104	153.9	1.87	1.52	15.4796982	122.42	177.67	167.56	54.81	177.23	296	81	79	72	0.048	1.001	12.638	1549
772	123.589	122.450		0.16	0.16	1.34	1.07	0.36	81	81	72	2.84	1.8	118	0.044	103	104	152.8	1.11	1.50	15.4984541	123.68	178.88	169.22	54.75	178.43	298	82	79	72	0.048	1.001	12.475	1545
773	123.749	122.609		0.16	0.16	1.32	1.06	0.36	81	81	72	2.85	1.8	119	0.041	107	107	150.3	2.50	1.50	14.1688766	124.67	180.02	169.73	54.94	179.61	300	83	80	72	0.048	1.001	12.474	1557
774	123.909	122.769		0.16	0.16	1.33	1.06	0.36	81	81	72	2.84	1.8	120	0.040	109	109	149.6	0.70	1.44	11.6500063	125.81	181.18	170.77	54.92	180.72	302	83	81	72	0.051	1.001	11.990	1510
775	124.069	122.929		0.16	0.16	1.33	1.06	0.36	81	82	72	2.85	1.8	115	0.042	106	106	148.1	1.43	1.57	14.1782379	127.07	182.46	172.06	54.93	182.00	296	83	81	72	0.037	1.001	13.114	1668
776	124.229	123.088		0.16	0.16	1.33	1.06	0.36	82	82	72	2.84	1.8	99	0.041	105	105	147.1	1.05	1.46	11.6529865	127.70	182.90	172.35	54.84	182.54	264	81	79	72	0.034	1.001	12.147	1553
777	124.389	123.248		0.16	0.16	1.32	1.05	0.36	82	82	73	2.83	1.8	95	0.043	102	103	146.0	1.11	1.46	10.2952642	128.28	183.39	173.70	54.74	183.02	248	81	78	73	0.032	1.001	12.143	1560
778	124.550	123.408		0.16	0.16	1.32	1.05	0.36	82	82	73	2.84	1.8	93	0.043	103	103	145.1	0.85	1.50	14.1198683	128.47	183.66	173.24	54.93	183.40	236	81	78	73	0.032	1.001	12.470	1604
779	124.709	123.567		0.16	0.16	1.32	1.05	0.36	82	82	73	2.84	1.8	93	0.047	97	98	144.6	0.53	1.46	11.1051922	128.50	183.89	173.40	55.07	183.57	229	80	77	73	0.032	1.001	12.143	1562
780	124.870	123.727		0.16	0.16	1.32	1.06	0.36	82	82	73	2.84	1.8	88	0.042	103	103	145.0	-0.43	1.50	10.2378321	128.92	184.18	173.86	54.93	183.85	224	79	76	73	0.034	1.001	12.465	1609
781	125.030	123.888		0.16	0.16	1.31	1.05	0.36	82	82	73	2.84	1.8	87	0.043	102	103	144.5	0.53	1.48	11.631958	129.10	184.32	174.13	54.95	184.05	219	79	75	73	0.033	1.001	12.300	1590
782	125.191	124.047		0.16	0.16	1.32	1.05	0.36	82	82	73	2.86	1.8	87	0.043	102	101	143.5	1.02	1.42	8.62053204	128.99	184.22	174.12	55.00	183.99	214	78	75	73	0.032	1.001	11.815	1526
783	125.351	124.207		0.16	0.16	1.32	1.05	0.36	82	82	74	2.89	1.8	86	0.043	101	102	144.0	-0.56	1.46	7.52043819	129.01	184.27	174.40	54.98	183.98	211	77	74	74	0.031	1.001	12.144	1568
784	125.512	124.368		0.16	0.16	1.32	1.06	0.36	82	82	74	2.89	1.7	86	0.042	103	104	143.3	0.75	1.42	11.6054983	129.03	184.30	174.42	54.97	184.00	208	77	74	74	0.030	1.001	11.817	1527
785	125.673	124.528		0.16	0.16	1.32	1.06	0.36	82	83	74	2.88	1.7	85	0.043	102	102	143.0	0.30	1.38	8.9909153	128.88	184.31	174.75	55.12	184.01	205	76	74	74	0.030	1.001	11.496	1483
786	125.834	124.688		0.16	0.16	1.32	1.06	0.36	82	83	74	2.89	1.7	84	0.046	99	98	143.1	-0.08	1.38	10.1823187	129.01	184.30	174.74	55.00	184.01	205	76	74	74	0.031	1.001	11.494	1485
787	125.995	124.849		0.16	0.16	1.33	1.07	0.36	82	83	74	2.89	1.7	84	0.047	97	98	142.8	0.27	1.36	9.46555233	128.90	184.27	174.78	55.09	183.99	204	75	73	74	0.034	1.001	11.328	1462
788	126.156	125.011		0.16	0.16	1.33	1.07	0.36	83	83	74	2.88	1.7	84	0.043	102	103	143.0	-0.18	1.44	4.79846191	128.79	184.16	174.58	55.07	183.86	203	75	73	74	0.036	1.001	11.972	1544
789	126.317	125.172		0.16	0.16	1.33	1.07	0.36	83	83	74	2.86	1.7	84	0.045	99	100	142.0	1.00	1.36	5.63080311	128.79	184.08	174.65	55.03	183.82	201	75	73	74	0.036	1.001	11.329	1461
790	126.478	125.333		0.16	0.16	1.33	1.08	0.36	83	83	74	2.85	1.7	84	0.044	101	101	142.6	-0.62	1.42	5.18570995	128.67	184.06	174.65	55.17	183.85	199	75	74	74	0.036	1.001	11.817	1522
791	126.640	125.496		0.16	0.16	1.33	1.08	0.36	83	83	74	2.87	1.7	84	0.047	98	99	142.3	0.29	1.41	10.0469646	128.50	184.05	174.52	55.24	183.74	197	75	74	74	0.035	1.001	11.788	1517
792	126.801	125.658		0.16	0.16	1.33	1.08	0.36	83	83	74	2.87	1.7	84	0.045	99	101	142.4	-0.05	1.40	8.81299305	128.42	183.87	174.43	55.21	183.63	195	75	74	74	0.035	1.001	11.652	1498
793	126.962	125.820		0.16	0.16	1.33	1.09	0.36	83	83	74	2.87	1.7	84	0.046	98	99	142.4	-0.09	1.40	8.33092308	128.34	183.80	174.34	55.15	183.50	193	76	74	74	0.035	1.001	11.653	1497

Elapsed Time	Particulate Sampling Data																	Fuel Weight, lb		Flow, gpm		Temperature Data, oF									Stack			
	Gas Meter Cubic Feet (1)	Gas Meter Cubic Feet (2)	Gas Meter Cubic Feet (amb)	Sample Rate, cfm (1)	Sample Rate, cfm (2)	Orifice dH (1)	Orifice dH (2)	Orifice dH (amb)	Meter oF (1)	Meter oF (2)	Meter oF (amb)	Meter Vac. In. Hg. (1)	Meter Vac. In. Hg. (2)	Dilution Tunnel Temp.	Dilution Tunnel dP	Pro. Rate (%) (1)	Pro. Rate (%) (2)	Scale Reading	Weight Change	Load Side Liquid Flow Rate	Boiler Side Liquid Flow Rate (optional)	Thermopile ΔT	Boiler to Heat Exch. Temp.	Heat Exch to Boiler Temp.	Inlet Load Temp.	Outlet Load Temp.	Stack	Filter (1)	Filter (2)	Ambient		Specific Heat of Inlet Water (BTU/lb-°F)	Mass Flow Rate of Inlet Water (lb/min)	Heat Output, Btu
794	127.124	125.983		0.16	0.16	1.32	1.09	0.36	83	83	75	2.86	1.7	85	0.041	105	106	142.1	0.36	1.30	10.303669	128.00	183.65	174.17	55.39	183.39	191	76	74	75	0.033	1.001	10.848	1390
795	127.285	126.146		0.16	0.16	1.33	1.09	0.36	83	83	75	2.85	1.7	85	0.042	103	105	142.0	0.12	1.38	7.52155828	128.20	183.62	174.26	55.19	183.39	190	76	74	75	0.032	1.001	11.489	1475
796	127.446	126.310		0.16	0.16	1.33	1.10	0.36	83	83	75	2.83	1.6	84	0.042	103	105	142.4	-0.47	1.42	7.80227613	128.07	183.51	174.05	55.17	183.24	187	76	74	75	0.032	1.001	11.811	1514
797	127.606	126.473		0.16	0.16	1.34	1.10	0.36	83	84	75	2.82	1.6	85	0.046	98	100	141.9	0.49	1.43	9.52786827	127.76	183.47	173.99	55.44	183.20	186	76	74	75	0.031	1.001	11.943	1528
798	127.766	126.636		0.16	0.16	1.34	1.10	0.36	83	84	75	2.78	1.6	85	0.046	98	100	142.2	-0.27	1.36	10.7052555	127.90	183.33	173.94	55.22	183.12	184	76	75	75	0.030	1.001	11.324	1450
799	127.927	126.797		0.16	0.16	1.33	1.06	0.36	84	84	75	2.78	1.6	85	0.046	98	99	141.9	0.30	1.43	11.5115023	127.74	183.26	173.82	55.23	182.97	182	76	75	75	0.029	1.001	11.928	1526
800	128.088	126.958		0.16	0.16	1.32	1.05	0.36	84	84	75	2.74	1.6	85	0.043	102	102	141.9	0.03	1.42	10.8261948	127.67	183.15	173.74	55.20	182.87	180	76	75	75	0.029	1.001	11.806	1509
801	128.248	127.118		0.16	0.16	1.32	1.05	0.36	84	84	75	2.77	1.6	85	0.046	98	98	142.0	-0.15	1.39	9.4696579	127.41	183.02	173.61	55.31	182.71	180	76	75	75	0.029	1.001	11.560	1475
802	128.409	127.278		0.16	0.16	1.32	1.05	0.36	84	84	76	2.78	1.6	85	0.046	98	98	141.9	0.19	1.38	10.134654	127.10	182.92	173.59	55.54	182.64	177	76	75	76	0.028	1.001	11.479	1461
803	128.569	127.439		0.16	0.16	1.32	1.05	0.36	84	84	76	2.8	1.6	85	0.045	99	100	140.9	0.94	1.35	7.45045948	127.32	182.79	173.43	55.21	182.54	177	76	75	76	0.027	1.001	11.223	1431
804	128.730	127.599		0.16	0.16	1.32	1.05	0.36	84	84	76	2.79	1.6	85	0.046	98	98	141.3	-0.36	1.37	6.48700905	126.95	182.58	173.35	55.43	182.38	176	76	75	76	0.027	1.001	11.393	1448
805	128.891	127.759		0.16	0.16	1.31	1.05	0.36	84	84	76	2.79	1.6	85	0.043	102	102	140.5	0.81	1.40	9.83078671	126.83	182.56	173.26	55.46	182.28	175	76	75	76	0.025	1.001	11.652	1480
806	129.052	127.919		0.16	0.16	1.31	1.05	0.36	84	84	76	2.76	1.6	85	0.043	102	102	140.6	-0.13	1.41	6.47026396	126.59	182.37	173.08	55.51	182.10	172	76	75	76	0.025	1.001	11.786	1494
807	129.212	128.080		0.16	0.16	1.32	1.05	0.36	84	84	76	2.79	1.6	85	0.045	99	100	141.2	-0.60	1.36	9.0313673	126.48	182.18	172.94	55.47	181.94	172	77	75	76	0.025	1.001	11.361	1439
808	129.373	128.240		0.16	0.16	1.32	1.05	0.36	84	85	76	2.79	1.6	85	0.044	100	100	141.0	0.21	1.34	10.6233368	126.25	182.11	172.86	55.58	181.83	172	77	75	76	0.025	1.001	11.170	1412
809	129.533	128.400		0.16	0.16	1.32	1.05	0.36	85	85	76	2.79	1.6	85	0.043	101	101	140.7	0.27	1.45	15.4584675	126.42	181.95	172.79	55.32	181.74	170	77	75	76	0.023	1.001	12.119	1534
810	129.694	128.560		0.16	0.16	1.32	1.05	0.36	85	85	76	2.78	1.6	85	0.045	99	99	141.2	-0.52	1.43	8.29395199	126.07	181.81	172.56	55.48	181.55	169	77	76	76	0.024	1.001	11.909	1503
811	129.855	128.720		0.16	0.16	1.32	1.05	0.36	85	85	77	2.79	1.6	85	0.045	99	99	140.7	0.49	1.36	12.858799	125.98	181.62	172.46	55.43	181.40	166	77	76	77	0.022	1.001	11.325	1428
812	130.016	128.880		0.16	0.16	1.32	1.05	0.36	85	85	77	2.8	1.6	85	0.045	99	99	141.2	-0.47	1.35	11.0765457	125.79	181.45	172.24	55.41	181.20	167	77	76	77	0.022	1.001	11.295	1422
813	130.176	129.041		0.16	0.16	1.32	1.05	0.36	85	85	77	2.8	1.6	85	0.044	100	101	141.2	-0.02	1.38	9.94049835	125.59	181.30	172.08	55.45	181.05	168	77	76	77	0.022	1.001	11.487	1444
814	130.337	129.201		0.16	0.16	1.32	1.05	0.36	85	85	77	2.8	1.6	85	0.047	97	97	140.8	0.49	1.30	10.3407669	125.28	181.22	172.34	55.63	180.92	167	77	76	77	0.022	1.001	10.831	1359
815	130.498	129.361		0.16	0.16	1.32	1.05	0.36	85	85	77	2.79	1.6	85	0.044	100	100	140.9	-0.13	1.38	10.2938824	125.31	181.09	171.80	55.51	180.81	163	77	76	77	0.021	1.001	11.475	1440
816	130.658	129.522		0.16	0.16	1.32	1.05	0.36	85	85	77	2.78	1.6	85	0.043	101	102	140.8	0.07	1.40	15.5383377	125.06	180.73	171.63	55.48	180.54	162	77	76	77	0.021	1.001	11.692	1464
817	130.819	129.681		0.16	0.16	1.32	1.05	0.36	85	85	77	2.79	1.6	85	0.045	99	98	140.6	0.19	1.42	12.8757257	124.73	180.60	171.44	55.61	180.34	162	77	76	77	0.021	1.001	11.805	1474
818	130.980	129.842		0.16	0.16	1.32	1.05	0.36	85	86	77	2.79	1.6	85	0.044	100	101	140.4	0.18	1.38	11.9109421	124.69	180.42	171.17	55.45	180.14	160	77	76	77	0.020	1.001	11.486	1434
819	131.141	130.002		0.16	0.16	1.32	1.05	0.36	85	86	77	2.8	1.6	86	0.045	99	99	141.3	-0.88	1.38	12.8809414	124.30	180.20	171.09	55.68	179.99	160	77	76	77	0.019	1.001	11.478	1428
820	131.302	130.162		0.16	0.16	1.32	1.05	0.36	85	86	77	2.79	1.6	86	0.045	99	99	140.7	0.57	1.42	14.1496878	124.28	180.02	170.90	55.50	179.78	158	77	76	77	0.019	1.001	11.796	1468
821	131.463	130.322		0.16	0.16	1.32	1.05	0.36	86	86	77	2.77	1.6	86	0.041	104	104	141.2	-0.49	1.36	11.6870003	124.08	179.87	170.73	55.55	179.63	158	78	77	77	0.019	1.001	11.318	1406
822	131.624	130.483		0.16	0.16	1.31	1.05	0.36	86	86	77	2.78	1.6	86	0.046	98	98	140.7	0.51	1.40	14.215992	123.81	179.70	170.55	55.63	179.44	159	78	77	77	0.018	1.001	11.638	1443
823	131.784	130.642		0.16	0.16	1.32	1.05	0.36	86	86	77	2.78	1.6	86	0.044	100	99	140.8	-0.10	1.34	15.3196211	123.70	179.50	170.39	55.54	179.24	158	78	77	77	0.018	1.001	11.152	1381
824	131.945	130.802		0.16	0.16	1.32	1.05	0.36	86	86	77	2.78	1.6	87	0.045	99	99	140.6	0.25	1.40	14.1714163	123.62	179.34	170.27	55.49	179.11	157	78	77	77	0.018	1.001	11.637	1440
825	132.106	130.963		0.16	0.16	1.32	1.05	0.36	86	86	78	2.78	1.6	87	0.042	103	103	141.1	-0.52	1.34	12.8802471	123.23	179.07	169.97	55.61	178.84	155	78	77	78	0.017	1.001	11.147	1375
826	132.267	131.123		0.16	0.16	1.32	1.05	0.36	86	86	78	2.78	1.6	87	0.047	97	97	141.2	-0.08	1.40	13.0883331	123.08	178.93	169.86	55.62	178.70	156	78	77	78	0.018	1.001	11.632	1433
827	132.427	131.283		0.16	0.16	1.32	1.05	0.36	86	86	78	2.79	1.6	87	0.043	101	101	141.1	0.09	1.40	12.9651928	123.02	178.80	169.72	55.53	178.56	152	78	77	78	0.017	1.001	11.631	1433
828	132.588	131.444		0.16	0.16	1.32	1.05	0.36	86	86	78	2.78	1.6	87	0.044	100	101	140.9	0.17	1.38	15.4703798	122.84	178.62	169.66	55.57	178.40	153	78	77	78	0.017	1.001	11.471	1411
829	132.749	131.603		0.16	0.16	1.31	1.05	0.36	86	86	78	2.79	1.6	87	0.043	101	101	140.5	0.40	1.32	14.1596622	122.62	178.41	169.76	55.59	178.20	154	78	77	78	0.016	1.001	10.981	1348
830	132.910	131.763		0.16	0.16	1.31	1.05	0.36	86	86	78	2.79	1.6	87	0.043	101	101	141.1	-0.58	1.40	15.4403582	122.31	178.27	169.23	55.67	177.98	152	78	77	78	0.015	1.001	11.632	1424
831	133.070	131.923		0.16	0.16	1.31	1.05	0.36	86	86	78	2.78	1.6	89	0.047	97	97	140.6	0.52	1.40	12.8693867	122.14	178.00	168.97	55.61	177.75	153	78	77	78	0.015	1.001	11.633	1423
832	133.231	132.084		0.16	0.16	1.31	1.05	0.36	86	87	78	2.78	1.6	88	0.045	99	100	140.9	-0.30	1.43	14.2279959	122.21	177.84	168.80	55.36	177.57	148	78	77	78	0.015	1.001	11.945	1462
833	133.392	132.243		0.16	0.16	1.31	1.05	0.36	87	87	78	2.78	1.6	87	0.042	102	102	140.9	-0.05	1.34	15.4704094	122.01	177.55	168.53	55.29	177.30	150	78	77	78	0.015	1.001	11.139	1361
834	133.553	132.404		0.16	0.16	1.31	1.05	0.36	87	87	78	2.79	1.6	86	0.043	101	102	140.9	0.07	1.28	11.6593161	121.88	177.33	169.01	55.23	177.11	153	78	77	78	0.015	1.001	10.657	1300
835	133.713	132.564		0.16	0.16	1.31	1.05	0.36	87	87	78	2.79	1.6	86	0.040	104	105	140.9	-0.05	1.41	11.6539946	121.82	177.14	168.23	55.18	177.00	150	78	77	78	0.015	1.001	11.782	1437
836	133.874	132.724		0.16	0.16	1.32	1.05	0.36	87	87	78	2.79	1.6	85	0.042	102	102	140.6	0.33	1.39	15.52003	121.43	176.99	168.07	55.31	176.74	149	78	77	78	0.015	1.001	11.626	1413
837	134.035	132.884		0.16	0.16	1.32	1.05	0.36	87	87	78	2.78	1.6	85	0.047	97	97	140.8	-0.24	1.39	15.1642017	121.28	176.77	167.82	55.21	176.49	150	78	77	78	0.014	1.001	11.628	1412
838	134.196	133.044		0.16	0.16	1.32	1.05	0.36	87	87	78	2.78	1.6	85	0.044	100	100	141.1	-0.29	1.39	14.2937765	121.16	176.48	167.52	55.08	176.24	146	78	77	78	0.014	1.001	11.625	1410
839	134.356	133.204		0.16	0.16	1.32	1.05	0.36	87	87	78	2.79	1.6	84	0.045	98	99	141.1	0.04	1.39	14.1295328	120.84	176.37	167.41	55.28	176.12	146	78	77	78	0.014	1.001	11.628	1407
840	134.517	133.364		0.16	0.16	1.31	1.05	0.36	87	87	78	2.77	1.6	84	0.045	99	99	140.8	0.26	1.39	15.4324389	120.51	176.07	167.19	55.34	175.84	144	78	78	78	0.014	1.001	11.625	1403
841	134.678	133.525		0.16	0.16	1.31	1.05	0.36	87	87	78	2.77	1.6	84	0.045	99	99	140.9	-0.10	1.38	15.4720831	120.65	175.87	166.95	54.98	175.63	145	78	78	78	0.014	1.001	11.467	1385
842	134.839	133.684		0.16	0.16	1.32	1.05	0.36	87	87	78	2.78	1.6	84	0.043	101	100	140.8	0.08	1.40	15.5375824	120.52	175.72	166.77	54.97	175.48	145	78	78	78	0.013	1.001	11.632	1404
843	135.000	133.844		0.16	0.16	1.32	1.05	0.36	87	87	78	2.78	1.6	84	0.044	100	100	141.2	-0.36	1.41	15.4905758	120.17	175.49	166.56	55.03	175.20	145	78	78	78	0.013	1.001	11.796	1419
844	135.161	134.006		0.16	0.16	1.32	1.05	0.36	87	87	78	2.77	1.6	83	0.042	102	103	140.9	0.30	1.38	15.5183144	120.16	175.26	166.42	54.88	175.04	143	78	78	78	0.013	1.001	11.469	1380
845	135.322	134.165		0.16	0.16	1.32	1.05	0.36	87	88	78	2.76	1.6	82	0.046	97	97	140.7	0.24	1.42	15.5030651	120.04	175.05	166.19	54.76	174.80	155	80	79	78	0.024	1.001	11.804	1419
846	135.483	134.324		0.16	0.16	1.31	1.04	0.36	87	88	78	2.8	1.6	95	0.045	100	99	140.2	0.49	1.38	15.4066877	120.04	174.70	165.87	54.47	174.51	152	78	77	78	0.019	1.001	11.482	1380
847	135.645	134.485		0.16	0.16	1.32	1.05	0.36	87	88	78	2.77	1.6	81	0.049	95	95	140.0	0.16	1.36	15.4421654	119.90	174.60	165.69	54.41	174.32	150	78	77	78	0.017	1.001	11.327	1360
848	135.806	134.645		0.16	0.16	1.32	1.06	0.36	88	88	78	2.76	1.6	80	0.045	98	98	140.2	-0.19	1.40	15.5378914	119.92	174.39	165.52	54.21	174.13	148	78	77	77	0.016	1.001	11.649	1399
849	135.967	134.805		0.16	0.16	1.32	1.05	0.36	88	88	77	2.77	1.6	79	0.047	96	96	140.1	0.11	1.42	15.490078	119.63	174.11	165.22	54.27	173.90	145	78	77	77	0.015	1.001	11.814	1415
850	136.129	134.967		0.16	0.16	1.32	1.05	0.36	88	88	77	2.75	1.6	79	0.047	97	97	140.3	-0.26	1.42	15.4037247	119.66	173.92	165.15	54.05	173.71	143	78	77	77	0.015	1.001	11.821	1416
851	136.290	135.127		0.16	0.16	1.32	1.05	0.36	88	88	77	2.76	1.6	78	0.047	96	96	139.9	0.47	1.42	15.4910154	119.50	173.74	164.92	54.01	173.52	141	78	77	77	0.014	1.001	11.820	1414
852	136.452	135.287		0.16	0.16	1.32	1.06	0.36	88	88	77	2.75	1.6	77	0.043	101	100	139.4	0.44	1.38	15.4322453	119.42	173.45	164.61	53.79	173.21	141	77	77	77	0.014	1.001	11.496	1375
853	136.613	135.449		0.16	0.16	1.33	1.06	0.36	88	88	77	2.75	1.6	77	0.045	98	99	140.1	-0.62	1.34	15.414197	119.21	173.26	164.43	53.82	173.03	139	77	77	76	0.014	1.001	11.181	1335
854	136.775	135.609		0.16	0.16	1.33	1.05	0.36	88	88	76	2.75	1.6	77	0.045	99	98	139.5	0.56	1.46	15.425746	119.17	173.01	164.26	53.65	172.82	136	77	77	76	0.013	1.001	12.151	1450
855	136.936	135.770		0.16	0.16	1.32	1.05	0.36	88	88	76	2.76	1.6	76	0.044	99	99	140.0	-0.46	1.36	15.4421072	119.04	172.83	164.12	53.63	172.66	136	77	77	76	0.013	1.001	11.345	1352

Elapsed Time	Particulate Sampling Data																Fuel Weight, lb		Flow, gpm		Temperature Data, oF								Stack			
	Gas Meter Cubic Feet (1)	Gas Meter Cubic Feet (2)	Gas Meter Cubic Feet (amb)	Sample Rate, cfm (1)	Sample Rate, cfm (2)	Orifice dH (1)	Orifice dH (2)	Orifice dH (amb)	Meter oF (1)	Meter oF (2)	Meter oF (amb)	Meter Vac. In. Hg. (1)	Meter Vac. In. Hg. (2)	Dilution Tunnel Temp.	Dilution Tunnel dP	Pro. Rate (%) (1)	Pro. Rate (%) (2)	Scale Reading	Weight Change	Load Side Liquid Flow Rate	Boiler Side Liquid Flow Rate (optional)	Thermopile ΔT	Boiler to Heat Exch. Temp.	Heat Exch to Boiler Temp.	Inlet Load Temp.	Outlet Load Temp.	Stack	Filter (1)	Filter (2)	Ambient		Specific Heat of Inlet Water (BTU/lb-°F)	Mass Flow Rate of Inlet Water (lb/min)	Heat Output, Btu
856	137.098	135.930		0.16	0.16	1.32	1.06	0.36	88	88	76	2.75	1.6	76	0.043	101	100	139.7	0.23	1.34	15.4919014	118.95	172.58	164.25	53.41	172.36	134	76	76	76	0.013	1.001	11.186	1332
857	137.259	136.092		0.16	0.16	1.32	1.06	0.36	88	88	76	2.76	1.6	75	0.041	102	104	139.8	-0.05	1.32	15.4419336	118.75	172.36	164.02	53.44	172.19	133	76	76	75	0.012	1.001	11.029	1311
858	137.421	136.252		0.16	0.16	1.33	1.06	0.36	88	88	75	2.76	1.6	75	0.043	101	100	139.7	0.08	1.28	15.5672617	118.54	172.31	163.76	53.48	172.01	135	76	76	75	0.012	1.001	10.707	1271
859	137.583	136.413		0.16	0.16	1.33	1.06	0.36	88	88	75	2.75	1.6	75	0.046	97	97	139.8	-0.13	1.42	15.4709721	118.32	171.96	163.22	53.40	171.72	132	76	76	75	0.012	1.001	11.833	1402
860	137.744	136.575		0.16	0.16	1.33	1.06	0.36	88	88	75	2.76	1.6	75	0.046	97	98	139.9	-0.04	1.34	15.4706182	117.94	171.64	163.03	53.45	171.39	133	75	76	75	0.011	1.001	11.189	1321
861	137.906	136.736		0.16	0.16	1.33	1.06	0.36	88	88	75	2.76	1.6	74	0.045	98	98	139.4	0.47	1.41	15.4801598	117.91	171.59	163.00	53.42	171.33	132	75	76	74	0.011	1.001	11.773	1390
862	138.068	136.897		0.16	0.16	1.33	1.06	0.36	88	88	74	2.76	1.6	74	0.040	104	104	140.3	-0.92	1.34	15.4802008	117.72	171.29	162.98	53.37	171.09	130	75	75	74	0.011	1.001	11.203	1320
863	138.230	137.057		0.16	0.16	1.33	1.06	0.36	88	88	74	2.76	1.6	74	0.046	97	96	139.2	1.10	1.42	15.4799728	117.62	171.13	162.54	53.31	170.93	129	75	75	74	0.011	1.001	11.845	1395
864	138.391	137.219		0.16	0.16	1.33	1.06	0.36	88	88	74	2.77	1.6	74	0.044	99	100	139.6	-0.42	1.42	15.5092392	117.27	170.75	162.08	53.30	170.57	129	75	75	74	0.011	1.001	11.845	1391
865	138.553	137.380		0.16	0.16	1.33	1.06	0.36	88	88	74	2.75	1.6	73	0.045	98	98	139.5	0.18	1.38	15.4524755	117.07	170.58	161.91	53.31	170.38	129	74	75	74	0.011	1.001	11.523	1351
866	138.715	137.541		0.16	0.16	1.33	1.06	0.36	87	88	74	2.75	1.6	73	0.045	98	98	139.4	0.11	1.40	15.4556217	116.91	170.38	161.73	53.31	170.22	126	74	75	73	0.010	1.001	11.706	1370
867	138.877	137.703		0.16	0.16	1.33	1.06	0.36	87	88	73	2.74	1.6	73	0.043	101	101	139.4	-0.06	1.50	15.3468523	116.59	170.09	160.83	53.26	169.86	126	74	74	73	0.010	1.001	12.521	1462
868	139.038	137.864		0.16	0.16	1.33	1.06	0.36	87	88	73	2.76	1.6	73	0.046	97	97	139.3	0.07	1.55	15.4525614	116.38	169.82	160.29	53.19	169.57	125	74	74	73	0.010	1.001	12.919	1505
869	139.200	138.024		0.16	0.16	1.33	1.06	0.36	87	88	73	2.77	1.6	73	0.045	98	97	139.5	-0.16	1.49	15.4618187	116.25	169.58	160.29	53.11	169.36	124	74	74	73	0.010	1.001	12.422	1446
870	139.362	138.185		0.16	0.16	1.33	1.06	0.36	87	88	73	2.75	1.6	73	0.045	98	98	139.4	0.09	1.41	15.4799414	115.85	169.28	159.93	53.20	169.04	124	73	74	73	0.010	1.001	11.762	1364
871	139.524	138.347		0.16	0.16	1.33	1.06	0.36	87	88	73	2.76	1.6	72	0.046	97	97	139.7	-0.31	1.50	15.4708757	115.76	169.15	159.94	53.16	168.92	125	73	74	73	0.009	1.001	12.478	1446
872	139.686	138.508		0.16	0.16	1.33	1.06	0.36	87	87	73	2.76	1.6	72	0.043	100	100	139.4	0.31	1.52	15.4801512	115.48	168.83	159.42	53.06	168.54	121	73	74	73	0.009	1.001	12.683	1466
873	139.847	138.669		0.16	0.16	1.33	1.07	0.36	87	87	73	2.77	1.6	72	0.046	97	97	139.2	0.19	1.50	15.4194613	115.26	168.52	159.25	53.06	168.32	122	73	73	72	0.009	1.001	12.500	1442
874	140.009	138.831		0.16	0.16	1.33	1.06	0.36	87	87	72	2.77	1.6	72	0.043	100	101	139.9	-0.62	1.51	15.5471783	115.06	168.34	158.99	53.02	168.08	122	73	73	72	0.009	1.001	12.559	1447
875	140.171	138.992		0.16	0.16	1.33	1.06	0.36	87	87	72	2.76	1.6	72	0.046	97	97	139.4	0.42	1.48	15.4619875	114.69	168.04	158.78	53.10	167.79	122	73	73	72	0.009	1.001	12.337	1417
876	140.332	139.153		0.16	0.16	1.33	1.06	0.36	87	87	72	2.77	1.6	72	0.046	97	97	139.6	-0.21	1.50	15.5091047	114.61	167.81	158.65	53.05	167.66	146	74	74	72	0.017	1.001	12.494	1434
877	140.495	139.314		0.16	0.16	1.33	1.06	0.36	87	87	72	2.79	1.6	79	0.043	102	101	139.1	0.55	1.50	15.5374746	114.14	167.40	158.21	53.07	167.21	141	72	73	72	0.015	1.001	12.506	1429
878	140.656	139.476		0.16	0.16	1.33	1.06	0.36	87	87	72	2.76	1.6	74	0.046	97	98	138.9	0.21	1.50	15.4705868	113.65	167.23	157.98	53.33	166.98	138	72	73	72	0.014	1.001	12.496	1422
879	140.818	139.637		0.16	0.16	1.34	1.06	0.36	87	87	72	2.76	1.6	72	0.043	100	100	139.3	-0.39	1.52	15.4525089	113.72	167.13	157.95	53.13	166.85	135	72	73	72	0.013	1.001	12.650	1440
880	140.980	139.798		0.16	0.16	1.33	1.07	0.36	87	87	72	2.76	1.6	72	0.043	100	100	139.0	0.32	1.48	15.4324436	113.13	166.81	157.69	53.46	166.59	133	72	73	71	0.012	1.001	12.338	1398
881	141.142	139.959		0.16	0.16	1.34	1.07	0.36	87	87	71	2.77	1.6	72	0.045	98	98	138.8	0.20	1.48	15.3852072	112.73	166.58	157.44	53.60	166.33	131	72	72	71	0.011	1.001	12.321	1391
882	141.304	140.121		0.16	0.16	1.33	1.06	0.36	86	87	71	2.76	1.6	72	0.042	102	102	138.8	-0.03	1.42	15.4908781	112.68	166.44	157.67	53.51	166.19	129	72	72	72	0.010	1.001	11.849	1337
883	141.466	140.282		0.16	0.16	1.34	1.06	0.36	86	87	72	2.77	1.6	72	0.044	100	99	138.9	-0.11	1.50	15.5376549	112.37	166.03	157.36	53.49	165.85	127	72	72	72	0.011	1.001	12.496	1406
884	141.628	140.443		0.16	0.16	1.34	1.07	0.36	86	87	72	2.77	1.6	72	0.046	97	97	139.1	-0.17	1.48	15.4234905	111.89	165.85	156.83	53.75	165.65	125	72	72	71	0.010	1.001	12.332	1382
885	141.790	140.605		0.16	0.16	1.34	1.07	0.36	86	86	71	2.76	1.6	72	0.047	96	97	138.8	0.30	1.56	15.4525051	111.68	165.55	156.59	53.71	165.38	124	72	72	71	0.009	1.001	12.973	1451
886	141.952	140.767		0.16	0.16	1.33	1.06	0.36	86	86	71	2.76	1.6	73	0.045	98	99	139.0	-0.26	1.52	15.4622669	111.28	165.35	156.34	53.84	165.12	122	72	72	71	0.009	1.001	12.680	1413
887	142.114	140.928		0.16	0.16	1.34	1.07	0.36	86	86	71	2.77	1.6	73	0.047	96	96	138.8	0.19	1.48	15.4533091	110.96	165.07	156.09	53.87	164.83	123	72	72	72	0.009	1.001	12.352	1372
888	142.275	141.090		0.16	0.16	1.34	1.06	0.36	86	86	72	2.76	1.6	73	0.046	97	98	138.9	-0.08	1.44	15.4874754	110.71	164.86	155.84	53.89	164.60	121	72	72	71	0.009	1.001	12.032	1334
889	142.437	141.252		0.16	0.16	1.34	1.07	0.36	86	86	71	2.76	1.6	73	0.044	100	100	138.7	0.25	1.52	15.5671415	110.49	164.59	155.70	53.91	164.39	120	72	72	71	0.009	1.001	12.676	1402
890	142.599	141.413		0.16	0.16	1.34	1.06	0.36	86	86	71	2.77	1.6	74	0.044	100	100	138.9	-0.21	1.52	15.461566	110.22	164.41	155.43	53.89	164.11	120	72	72	71	0.008	1.001	12.673	1399
891	142.761	141.574		0.16	0.16	1.34	1.07	0.36	86	86	71	2.75	1.6	74	0.046	98	97	139.1	-0.16	1.50	15.5085773	110.10	164.18	155.29	53.85	163.95	118	72	72	71	0.008	1.001	12.506	1379
892	142.923	141.736		0.16	0.16	1.34	1.06	0.36	86	86	71	2.76	1.6	74	0.047	96	97	139.1	0.00	1.42	15.4801645	109.73	163.84	154.99	53.87	163.60	119	72	72	71	0.007	1.001	11.869	1304
893	143.085	141.898		0.16	0.16	1.33	1.07	0.36	86	86	71	2.76	1.6	74	0.046	98	98	138.9	0.13	1.54	15.5182285	109.37	163.53	154.73	53.97	163.35	117	72	72	71	0.007	1.001	12.836	1406
894	143.246	142.059		0.16	0.16	1.34	1.06	0.36	86	86	71	2.76	1.6	74	0.044	99	100	139.1	-0.22	1.48	15.5849743	109.18	163.34	154.54	53.95	163.13	117	72	72	71	0.007	1.001	12.352	1350
895	143.408	142.220		0.16	0.16	1.34	1.07	0.36	86	86	71	2.74	1.6	74	0.045	99	98	139.2	-0.01	1.50	15.452261	108.93	163.12	154.26	53.93	162.86	116	72	72	71	0.007	1.001	12.508	1364
896	143.570	142.381		0.16	0.16	1.34	1.07	0.36	86	86	71	2.76	1.6	74	0.044	100	100	139.4	-0.23	1.50	15.5000725	108.73	162.83	154.06	53.90	162.63	116	72	72	71	0.007	1.001	12.512	1362
897	143.732	142.544		0.16	0.16	1.34	1.07	0.36	86	86	71	2.76	1.6	74	0.047	96	98	139.3	0.06	1.56	15.452158	108.53	162.65	153.82	53.87	162.40	114	72	72	71	0.007	1.001	13.000	1413
898	143.894	142.705		0.16	0.16	1.33	1.06	0.36	85	86	71	2.77	1.6	74	0.043	101	101	139.1	0.25	1.50	15.5001831	108.14	162.36	153.68	54.04	162.18	115	72	72	72	0.007	1.001	12.510	1354
899	144.056	142.866		0.16	0.16	1.33	1.07	0.36	85	86	72	2.75	1.6	74	0.046	98	97	139.5	-0.37	1.50	15.5469303	107.80	162.07	153.33	54.02	161.82	112	72	72	72	0.006	1.001	12.513	1351
900	144.218	143.027		0.16	0.16	1.34	1.06	0.36	85	85	72	2.76	1.6	74	0.046	98	98	138.8	0.69	1.48	15.5758829	107.69	161.85	153.18	53.95	161.64	114	72	72	72	0.006	1.001	12.350	1332
901	144.380	143.189		0.16	0.16	1.34	1.07	0.36	85	85	72	2.77	1.6	74	0.048	96	96	138.9	-0.18	1.48	15.4616537	107.29	161.61	152.88	54.05	161.33	113	72	71	71	0.007	1.001	12.343	1326
902	144.541	143.351		0.16	0.16	1.33	1.06	0.36	85	85	71	2.77	1.6	74	0.048	95	96	139.3	-0.40	1.52	15.5179586	107.07	161.41	152.72	54.13	161.20	114	72	72	72	0.006	1.001	12.677	1359
903	144.703	143.512		0.16	0.16	1.33	1.07	0.36	85	85	72	2.77	1.6	74	0.044	100	100	138.9	0.45	1.50	15.4322481	106.80	161.06	152.42	54.05	160.85	112	72	72	72	0.006	1.001	12.519	1339
904	144.864	143.674		0.16	0.16	1.33	1.06	0.36	85	85	72	2.78	1.6	74	0.041	103	104	139.4	-0.49	1.50	15.517787	106.61	160.87	152.20	54.03	160.63	111	72	71	71	0.006	1.001	12.517	1336
905	145.025	143.835		0.16	0.16	1.34	1.06	0.36	85	85	71	2.77	1.6	74	0.043	100	101	138.9	0.45	1.56	15.4802094	106.30	160.64	151.73	54.06	160.36	112	72	72	72	0.006	1.001	12.994	1383
906	145.187	143.996		0.16	0.16	1.34	1.07	0.36	85	85	72	2.78	1.6	74	0.042	102	102	139.0	-0.05	1.77	15.5041103	106.05	160.25	150.79	54.00	160.05	140	72	72	71	0.030	1.001	14.774	1569
907	145.347	144.157		0.16	0.16	1.33	1.06	0.36	85	85	71	2.79	1.6	83	0.043	101	102	139.2	-0.21	1.63	15.4618616	105.77	159.94	150.86	53.95	159.73	166	73	72	72	0.030	1.001	13.599	1440
908	145.509	144.319		0.16	0.16	1.33	1.05	0.36	85	85	72	2.79	1.6	88	0.045	100	101	138.3	0.86	1.63	15.4188709	105.51	159.71	150.64	53.98	159.49	199	73	72	72	0.028	1.001	13.612	1438
909	145.670	144.478		0.16	0.16	1.33	1.06	0.36	85	85	72	2.79	1.6	91	0.043	102	101	137.6	0.72	1.57	15.4704275	105.48	159.76	150.66	54.00	159.48	226	73	72	72	0.039	1.001	13.091	1383
910	145.831	144.639		0.16	0.16	1.34	1.07	0.36	85	85	72	2.79	1.6	95	0.043	102	103	136.7	0.95	1.58	15.508564	105.77	160.12	150.95	53.98	159.74	244	73	73	72	0.039	1.001	13.159	1394
911	145.992	144.800		0.16	0.16	1.34	1.07	0.36	85	85	72	2.79	1.6	99	0.042	104	104	135.1	1.61	1.57	15.5286808	106.35	160.64	151.33	53.91	160.26	254	74	73	72	0.040	1.001	13.102	1395
912	146.153	144.961		0.16	0.16	1.34	1.07	0.36	85	85	72	2.8	1.6	101	0.043	103	103	134.8	0.29	1.52	15.4318533	107.06	161.32	152.05	53.90	160.96	260	74	73	72	0.039	1.001	12.680	1359
913	146.314	145.121		0.16	0.16	1.34	1.07	0.36	85	85	72	2.79	1.6	103	0.047	99	98	133.5	1.29	1.60	15.4416876	107.72	162.02	152.71	53.96	161.68	264	75	73	72	0.042	1.001	13.348	1440
914	146.476	145.282		0.16	0.16	1.34	1.07	0.36	85	85	72	2.8	1.6	105	0.045	102	101	133.1	0.36	1.56	15.4691267	108.46	162.73	153.28	53.90	162.37	267	75	74	72	0.043	1.001	13.045	1417
915	146.637	145.443		0.16	0.16	1.34	1.06	0.36	85	85	72	2.8	1.6	106	0.045	101	102	132.0	1.07	1.62	15.4321642	109.27	163.55	154.04	53.91	163.18	270	75	74	72	0.042	1.001	13.470	1474
916	146.797	145.603		0.16	0.16	1.34	1.07	0.36	85	85	72	2.79	1.6	106	0.042	104	104	131.4	0.66	1.56	15.5670538	109.92	164.32	154.77	54.02	163.94	272	76	74	72	0.041	1.001	13.004	1431
917	146.958	145.763		0.16	0.16	1.34	1.07	0.36	85	85	72	2.79	1.6	107	0.044	102	102	130.1	1.25	1.52	15.4996939	110.84	165.29	155.61	54.02	164.86	275	76	74	72	0.043	1.001	12.687	1408

Elapsed Time	Particulate Sampling Data																	Fuel Weight, lb		Flow, gpm		Temperature Data, oF									Stack			
	Gas Meter Cubic Feet (1)	Gas Meter Cubic Feet (2)	Gas Meter Cubic Feet (amb)	Sample Rate, cfm (1)	Sample Rate, cfm (2)	Orifice dH (1)	Orifice dH (2)	Orifice dH (amb)	Meter oF (1)	Meter oF (2)	Meter oF (amb)	Meter Vac. In. Hg. (1)	Meter Vac. In. Hg. (2)	Dilution Tunnel Temp.	Dilution Tunnel dP	Pro. Rate (%) (1)	Pro. Rate (%) (2)	Scale Reading	Weight Change	Load Side Liquid Flow Rate	Boiler Side Liquid Flow Rate (optional)	Thermopile ΔT	Boiler to Heat Exch. Temp.	Heat Exch to Boiler Temp.	Inlet Load Temp.	Outlet Load Temp.	Stack	Filter (1)	Filter (2)	Ambient		Specific Heat of Inlet Water (BTU/lb-°F)	Mass Flow Rate of Inlet Water (lb/min)	Heat Output, Btu
918	147.119	145.924		0.16	0.16	1.34	1.07	0.36	85	85	72	2.8	1.6	108	0.045	101	102	129.7	0.41	1.54	15.4617939	111.86	166.13	156.43	53.94	165.80	279	76	75	72	0.042	1.001	12.829	1437
919	147.279	146.084		0.16	0.16	1.34	1.07	0.36	85	85	72	2.81	1.6	110	0.041	106	106	128.7	0.97	1.58	15.4727011	112.65	167.07	157.25	54.02	166.68	283	77	75	72	0.044	1.001	13.159	1484
920	147.440	146.244		0.16	0.16	1.34	1.07	0.36	85	85	72	2.82	1.6	111	0.041	106	106	127.5	1.29	1.60	15.4032202	113.69	168.08	158.12	53.96	167.65	285	77	75	72	0.045	1.001	13.324	1517
921	147.600	146.405		0.16	0.16	1.34	1.06	0.36	85	85	72	2.82	1.6	111	0.041	106	107	126.7	0.80	1.60	15.3850632	114.74	169.16	159.13	54.00	168.75	289	77	76	72	0.045	1.001	13.320	1530
922	147.761	146.564		0.16	0.16	1.34	1.06	0.36	84	85	72	2.83	1.6	112	0.043	104	103	125.7	0.91	1.56	15.4616022	115.67	170.09	160.01	54.01	169.68	293	78	76	72	0.050	1.001	12.994	1505
923	147.921	146.724		0.16	0.16	1.34	1.06	0.36	85	85	72	2.81	1.6	114	0.044	102	103	124.2	1.59	1.58	15.5374269	116.90	171.38	161.08	53.98	170.88	296	78	77	72	0.045	1.001	13.160	1540
924	148.082	146.884		0.16	0.16	1.34	1.06	0.36	84	85	72	2.83	1.6	114	0.043	104	104	123.1	1.03	1.58	15.4031839	118.08	172.55	162.20	54.02	172.10	297	79	77	72	0.049	1.001	13.158	1556
925	148.242	147.043		0.16	0.16	1.33	1.05	0.36	84	85	72	2.83	1.6	114	0.043	104	103	121.6	1.51	1.58	15.4231615	119.40	173.79	163.42	53.97	173.37	299	79	77	72	0.045	1.001	13.151	1572
926	148.402	147.202		0.16	0.16	1.33	1.05	0.36	84	85	72	2.83	1.6	115	0.042	105	105	121.3	0.37	1.54	15.4294281	120.40	174.92	164.41	54.03	174.43	299	79	78	72	0.045	1.001	12.828	1546
927	148.562	147.362		0.16	0.16	1.33	1.05	0.36	84	84	72	2.84	1.6	114	0.043	104	104	119.5	1.78	1.60	15.4796009	121.42	175.94	165.34	54.06	175.48	297	80	78	71	0.046	1.001	13.312	1618
928	148.722	147.520		0.16	0.16	1.33	1.05	0.36	84	84	71	2.85	1.7	113	0.041	106	105	117.9	1.59	1.46	15.4903193	122.66	177.18	166.67	54.02	176.68	300	80	79	72	0.047	1.001	12.185	1496
929	148.881	147.679		0.16	0.16	1.32	1.04	0.36	84	84	72	2.84	1.7	115	0.042	104	105	116.9	1.00	1.46	15.4703207	123.95	178.49	168.32	54.04	177.99	299	81	79	72	0.040	1.001	12.189	1513
930	149.040	147.838		0.16	0.16	1.33	1.04	0.36	84	84	72	2.86	1.7	115	0.042	104	105	114.9	1.95	1.50	15.2421551	125.09	179.61	169.19	54.05	179.14	298	81	79	72	0.047	1.001	12.504	1566
931	149.200	147.996		0.16	0.16	1.32	1.04	0.36	84	84	72	2.86	1.7	114	0.042	105	104	114.0	0.93	1.50	15.412261	126.18	180.74	170.24	54.09	180.27	296	81	79	72	0.046	1.001	12.512	1581
932	149.360	148.154		0.16	0.16	1.31	1.03	0.36	84	84	72	2.85	1.7	113	0.043	104	103	112.7	1.34	1.52	15.4802589	127.33	181.73	171.53	53.96	181.30	277	80	78	72	0.036	1.001	12.668	1615
933	149.520	148.312		0.16	0.16	1.31	1.05	0.36	84	84	72	2.85	1.7	98	0.045	100	99	111.3	1.39	1.48	13.1849546	128.07	182.66	172.44	54.19	182.26	254	80	77	72	0.034	1.001	12.352	1584
934	149.680	148.471		0.16	0.16	1.31	1.04	0.36	84	84	72	2.85	1.7	91	0.046	98	98	110.6	0.69	1.44	10.669755	128.70	183.25	173.01	54.19	182.88	241	79	76	72	0.033	1.001	12.019	1549
935	149.841	148.631		0.16	0.16	1.31	1.04	0.36	84	84	72	2.84	1.7	88	0.046	99	98	109.9	0.69	1.42	11.624506	129.17	183.60	173.60	54.09	183.26	232	78	76	72	0.032	1.001	11.859	1534
936	150.001	148.790		0.16	0.16	1.31	1.04	0.36	84	84	72	2.84	1.7	86	0.045	99	99	109.9	0.00	1.50	12.4328938	129.32	183.87	173.92	54.24	183.56	226	77	75	72	0.030	1.001	12.502	1619
937	150.161	148.949		0.16	0.16	1.32	1.05	0.36	84	84	72	2.84	1.7	83	0.044	100	100	108.8	1.06	1.44	11.5679607	129.62	184.13	174.12	54.18	183.80	221	77	75	72	0.034	1.001	12.027	1561
938	150.322	149.109		0.16	0.16	1.32	1.04	0.36	84	84	72	2.84	1.7	81	0.046	98	98	108.3	0.56	1.38	12.9440718	129.85	184.39	174.67	54.18	184.03	216	76	75	71	0.033	1.001	11.546	1501
939	150.483	149.268		0.16	0.16	1.32	1.05	0.36	84	84	71	2.84	1.7	81	0.043	101	100	108.2	0.10	1.42	9.31408691	129.91	184.43	174.73	54.19	184.10	213	76	74	71	0.032	1.001	11.863	1543
940	150.644	149.429		0.16	0.16	1.32	1.05	0.36	84	84	71	2.84	1.6	80	0.043	101	102	107.8	0.39	1.38	6.48711014	129.90	184.50	174.82	54.29	184.18	210	75	74	72	0.032	1.001	11.545	1502
941	150.805	149.589		0.16	0.16	1.32	1.05	0.36	84	84	72	2.83	1.6	79	0.045	99	99	108.1	-0.32	1.42	9.05597019	129.98	184.66	174.93	54.32	184.30	207	75	74	72	0.031	1.001	11.861	1543
942	150.966	149.748		0.16	0.16	1.33	1.06	0.36	84	84	72	2.82	1.6	79	0.046	98	97	107.5	0.62	1.42	8.81148624	130.10	184.66	174.95	54.25	184.34	205	75	74	72	0.030	1.001	11.850	1543
943	151.127	149.909		0.16	0.16	1.32	1.06	0.36	84	84	72	2.81	1.6	78	0.044	100	100	107.7	-0.22	1.38	9.54580021	130.08	184.56	174.89	54.19	184.27	204	75	74	72	0.033	1.001	11.537	1503
944	151.288	150.070		0.16	0.16	1.33	1.06	0.36	84	84	72	2.8	1.6	77	0.045	99	99	107.3	0.40	1.42	8.98367119	129.68	184.39	174.72	54.39	184.07	203	75	74	72	0.037	1.001	11.864	1540
945	151.449	150.231		0.16	0.16	1.32	1.07	0.36	84	84	72	2.81	1.6	77	0.043	101	101	107.3	0.02	1.39	14.214076	129.68	184.35	174.60	54.35	184.04	201	75	74	72	0.038	1.001	11.554	1500
946	151.611	150.392		0.16	0.16	1.33	1.07	0.36	84	84	72	2.8	1.6	77	0.042	103	103	107.3	-0.04	1.44	9.03006268	129.78	184.29	174.65	54.25	184.03	199	74	74	72	0.038	1.001	12.019	1562
947	151.772	150.555		0.16	0.16	1.33	1.07	0.36	84	84	72	2.79	1.6	77	0.043	101	103	106.7	0.63	1.38	11.5565538	129.63	184.25	174.55	54.30	183.93	197	74	74	72	0.037	1.001	11.532	1497
948	151.933	150.716		0.16	0.16	1.33	1.07	0.36	84	84	72	2.79	1.6	77	0.047	96	97	106.6	0.03	1.40	9.67772293	129.54	184.15	174.47	54.27	183.80	194	74	74	72	0.037	1.001	11.701	1518
949	152.094	150.878		0.16	0.16	1.34	1.07	0.36	84	84	72	2.78	1.6	77	0.043	101	102	106.5	0.11	1.41	14.1374559	129.34	184.09	174.45	54.44	183.78	192	74	74	72	0.037	1.001	11.728	1519
950	152.255	151.039		0.16	0.16	1.33	1.07	0.36	84	84	72	2.79	1.6	76	0.043	101	101	106.3	0.24	1.31	7.7183919	129.49	184.08	174.53	54.27	183.76	191	74	74	72	0.036	1.001	10.921	1416
951	152.417	151.202		0.16	0.16	1.33	1.07	0.36	84	84	72	2.79	1.6	76	0.044	100	101	105.9	0.42	1.39	9.06885529	129.35	183.95	174.36	54.34	183.70	189	74	74	72	0.035	1.001	11.630	1506
952	152.578	151.363		0.16	0.16	1.33	1.07	0.36	84	84	72	2.78	1.6	76	0.044	100	100	106.6	-0.77	1.45	14.1383352	129.13	183.73	174.15	54.32	183.46	187	74	74	72	0.035	1.001	12.100	1564
953	152.739	151.525		0.16	0.16	1.33	1.07	0.36	84	84	72	2.79	1.6	76	0.043	101	102	106.3	0.29	1.40	6.46636534	129.00	183.70	174.19	54.44	183.44	184	74	73	72	0.034	1.001	11.650	1505
954	152.901	151.687		0.16	0.16	1.33	1.07	0.36	84	84	72	2.78	1.6	76	0.044	100	101	106.1	0.21	1.41	10.0939894	128.94	183.57	173.94	54.33	183.27	183	74	73	72	0.032	1.001	11.720	1513
955	153.062	151.849		0.16	0.16	1.33	1.08	0.36	84	84	72	2.79	1.6	76	0.042	102	103	105.7	0.41	1.38	7.17386198	128.86	183.42	173.84	54.30	183.16	180	74	73	72	0.032	1.001	11.544	1489
956	153.223	152.011		0.16	0.16	1.33	1.07	0.36	84	84	72	2.77	1.6	76	0.046	97	99	105.4	0.29	1.36	12.9402142	128.75	183.42	173.78	54.29	183.04	180	73	73	72	0.031	1.001	11.370	1466
957	153.384	152.172		0.16	0.16	1.33	1.07	0.36	84	84	72	2.78	1.6	76	0.044	100	100	105.6	-0.20	1.40	11.6111984	128.59	183.11	173.60	54.30	182.89	178	73	73	72	0.030	1.001	11.702	1507
958	153.546	152.334		0.16	0.16	1.33	1.08	0.36	84	84	72	2.78	1.6	76	0.045	99	100	105.7	-0.07	1.40	7.94750309	128.34	183.09	173.54	54.46	182.80	177	73	73	72	0.030	1.001	11.702	1504
959	153.707	152.497		0.16	0.16	1.33	1.07	0.36	84	84	72	2.79	1.6	76	0.046	97	99	105.9	-0.24	1.38	11.5479813	128.27	182.94	173.41	54.34	182.61	176	73	73	72	0.029	1.001	11.537	1482
960	153.868	152.658		0.16	0.16	1.34	1.07	0.36	84	84	72	2.79	1.6	76	0.046	97	98	105.5	0.46	1.46	11.5974121	128.23	182.88	173.37	54.33	182.57	175	73	73	72	0.029	1.001	12.186	1564
961	154.030	152.820		0.16	0.16	1.34	1.07	0.36	84	84	72	2.79	1.6	76	0.043	101	102	105.7	-0.17	1.37	10.7133608	128.08	182.68	173.09	54.31	182.39	173	73	73	72	0.028	1.001	11.385	1460
962	154.191	152.981		0.16	0.16	1.32	1.07	0.36	84	84	72	2.79	1.6	76	0.046	97	98	105.5	0.17	1.43	10.0006752	128.03	182.57	173.04	54.25	182.27	171	73	73	72	0.027	1.001	11.962	1533
963	154.353	153.144		0.16	0.16	1.33	1.08	0.36	84	84	72	2.8	1.6	76	0.046	98	99	105.3	0.16	1.36	12.9732933	127.66	182.35	173.09	54.37	182.03	171	73	73	72	0.027	1.001	11.377	1454
964	154.514	153.306		0.16	0.16	1.32	1.07	0.36	84	84	72	2.79	1.6	76	0.043	101	102	105.5	-0.14	1.42	9.92616177	127.59	182.18	172.75	54.35	181.94	168	73	73	71	0.026	1.001	11.862	1515
965	154.675	153.468		0.16	0.16	1.33	1.08	0.36	84	84	71	2.8	1.6	76	0.041	103	104	105.6	-0.16	1.40	7.99469519	127.35	182.17	172.61	54.49	181.84	167	73	73	72	0.025	1.001	11.700	1492
966	154.836	153.629		0.16	0.16	1.33	1.08	0.36	84	84	72	2.79	1.6	76	0.045	99	99	103.9	1.69	1.37	10.4000263	127.34	181.87	172.40	54.31	181.65	166	73	73	72	0.025	1.001	11.382	1451
967	154.998	153.792		0.16	0.16	1.33	1.08	0.36	84	84	72	2.81	1.6	76	0.044	100	101	104.3	-0.35	1.36	10.3340302	127.04	181.83	172.36	54.49	181.53	164	73	73	72	0.024	1.001	11.365	1446
968	155.159	153.953		0.16	0.16	1.33	1.07	0.36	84	84	72	2.81	1.6	76	0.042	102	102	103.5	0.77	1.35	8.3326292	126.98	181.63	172.20	54.40	181.38	163	73	73	72	0.023	1.001	11.214	1426
969	155.321	154.115		0.16	0.16	1.32	1.08	0.36	84	84	72	2.81	1.6	76	0.045	99	100	104.0	-0.45	1.38	12.9257402	126.75	181.40	172.03	54.32	181.07	162	73	72	72	0.023	1.001	11.539	1464
970	155.482	154.277		0.16	0.16	1.33	1.07	0.36	84	84	72	2.8	1.6	76	0.045	99	100	103.5	0.44	1.38	11.6135759	126.66	181.24	171.73	54.32	180.98	158	73	72	72	0.023	1.001	11.541	1464
971	155.643	154.440		0.16	0.16	1.33	1.08	0.36	84	84	72	2.81	1.6	76	0.044	100	101	103.8	-0.29	1.38	10.7357101	126.35	181.14	171.74	54.50	180.86	160	73	72	72	0.022	1.001	11.545	1460
972	155.804	154.601		0.16	0.16	1.32	1.07	0.36	84	84	72	2.81	1.6	76	0.046	97	98	104.9	-1.04	1.35	12.8678713	126.15	180.88	171.53	54.49	180.64	157	73	72	72	0.022	1.001	11.217	1417
973	155.965	154.763		0.16	0.16	1.33	1.07	0.36	84	84	72	2.81	1.6	76	0.044	100	101	104.8	0.06	1.34	14.2105808	126.07	180.69	171.35	54.36	180.43	157	73	72	72	0.021	1.001	11.213	1415
974	156.126	154.924		0.16	0.16	1.33	1.08	0.36	84	84	72	2.81	1.6	76	0.047	96	97	104.8	0.04	1.38	14.9324026	125.95	180.63	171.68	54.36	180.31	158	73	72	72	0.021	1.001	11.538	1455
975	156.288	155.087		0.16	0.16	1.33	1.08	0.36	84	84	72	2.81	1.6	76	0.043	101	103	104.9	-0.12	1.44	12.3797741	125.61	180.34	170.98	54.46	180.08	156	73	72	72	0.021	1.001	12.023	1512
976	156.449	155.249		0.16	0.16	1.33	1.07	0.36	84	84	72	2.81	1.6	76	0.045	99	100	104.4	0.48	1.34	14.1979885	125.59	180.18	171.13	54.37	179.96	155	73	72	72	0.020	1.001	11.213	1410
977	156.610	155.410		0.16	0.16	1.32	1.08	0.36	84	84	72	2.82	1.6	76	0.046	97	98	104.7	-0.33	1.34	15.4515018	125.35	180.09	170.68	54.42	179.76	152	72	72	72	0.020	1.001	11.208	1407
978	156.772	155.572		0.16	0.16	1.32	1.08	0.36	84	84	72	2.81	1.6	76	0.043	101	102	104.7	0.00	1.34	13.0120754	125.24	179.90	170.75	54.34	179.58	154	72	72	72	0.020	1.001	11.212	1406
979	156.933	155.735		0.16	0.16	1.33	1.08	0.36	84	84	72	2.8	1.6	76	0.043	101	103	104.4	0.30	1.35	15.4202385	124.97	179.72	170.47	54.49	179.47	151	72	72	72	0.019	1.001	11.215	1403

Elapsed Time	Particulate Sampling Data																	Fuel Weight, lb		Flow, gpm		Temperature Data, oF									Stack			
	Gas Meter Cubic Feet (1)	Gas Meter Cubic Feet (2)	Gas Meter Cubic Feet (amb)	Sample Rate, cfm (1)	Sample Rate, cfm (2)	Orifice dH (1)	Orifice dH (2)	Orifice dH (amb)	Meter oF (1)	Meter oF (2)	Meter oF (amb)	Meter Vac. In. Hg. (1)	Meter Vac. In. Hg. (2)	Dilution Tunnel Temp.	Dilution Tunnel dP	Pro. Rate (%) (1)	Pro. Rate (%) (2)	Scale Reading	Weight Change	Load Side Liquid Flow Rate	Boiler Side Liquid Flow Rate (optional)	Thermopile ΔT	Boiler to Heat Exch. Temp.	Heat Exch to Boiler Temp.	Inlet Load Temp.	Outlet Load Temp.	Stack	Filter (1)	Filter (2)	Ambient		Specific Heat of Inlet Water (BTU/lb-°F)	Mass Flow Rate of Inlet Water (lb/min)	Heat Output, Btu
980	157.094	155.896		0.16	0.16	1.33	1.07	0.36	84	84	72	2.8	1.6	76	0.043	101	101	104.8	-0.41	1.42	15.4411154	124.78	179.45	170.06	54.41	179.19	155	72	72	72	0.019	1.001	11.864	1482
981	157.256	156.058		0.16	0.16	1.33	1.08	0.36	84	84	72	2.81	1.6	75	0.042	103	103	104.8	0.00	1.40	14.1201544	124.46	179.19	169.89	54.48	178.93	152	72	72	72	0.019	1.001	11.697	1458
982	157.417	156.220		0.16	0.16	1.33	1.08	0.36	84	84	72	2.82	1.6	76	0.044	100	101	104.8	0.06	1.40	14.7627296	124.37	179.00	169.71	54.39	178.76	152	72	72	72	0.018	1.001	11.694	1456
983	157.578	156.382		0.16	0.16	1.33	1.07	0.36	84	84	72	2.82	1.6	76	0.043	101	102	104.6	0.20	1.38	14.207221	124.27	178.87	169.55	54.34	178.61	152	72	72	72	0.018	1.001	11.534	1435
984	157.740	156.542		0.16	0.16	1.33	1.04	0.36	84	84	72	2.81	1.6	76	0.043	101	101	104.8	-0.19	1.40	15.4994907	123.98	178.67	169.38	54.41	178.39	149	72	72	72	0.018	1.001	11.698	1452
985	157.901	156.701		0.16	0.16	1.33	1.04	0.36	84	84	72	2.8	1.6	76	0.044	100	99	105.2	-0.46	1.42	12.9421759	123.85	178.49	169.22	54.35	178.19	147	72	72	72	0.017	1.001	11.856	1470
986	158.062	156.861		0.16	0.16	1.33	1.04	0.36	84	84	72	2.82	1.6	76	0.046	97	97	104.7	0.56	1.33	15.507987	123.47	178.23	168.93	54.49	177.96	149	72	72	72	0.017	1.001	11.056	1367
987	158.223	157.020		0.16	0.16	1.32	1.04	0.36	84	84	72	2.81	1.6	75	0.042	102	101	105.0	-0.35	1.38	15.4546947	123.33	178.07	168.87	54.48	177.81	145	72	72	72	0.016	1.001	11.540	1425
988	158.385	157.180		0.16	0.16	1.33	1.04	0.36	84	84	72	2.8	1.6	76	0.045	99	98	104.6	0.44	1.37	15.4792604	123.33	177.87	168.68	54.29	177.63	146	72	72	72	0.017	1.001	11.381	1405
989	158.546	157.340		0.16	0.16	1.32	1.04	0.36	84	84	72	2.81	1.6	76	0.045	99	98	107.7	-3.16	1.44	14.2844152	122.90	177.58	168.40	54.42	177.33	145	72	72	72	0.016	1.001	12.023	1479
990	158.707	157.498		0.16	0.16	1.33	1.04	0.36	84	84	72	2.82	1.6	76	0.045	99	97	103.7	4.08	1.38	14.1371317	122.74	177.38	168.16	54.39	177.14	143	72	72	72	0.016	1.001	11.542	1418
991	158.868	157.657		0.16	0.16	1.33	1.04	0.36	84	84	72	2.82	1.6	75	0.043	101	100	104.0	-0.30	1.40	15.5172663	122.40	177.12	167.99	54.49	176.89	141	72	72	72	0.016	1.001	11.701	1434
992	159.030	157.818		0.16	0.16	1.34	1.04	0.36	84	84	72	2.8	1.6	76	0.046	98	98	103.9	0.04	1.40	15.4135275	122.41	176.99	168.05	54.29	176.70	141	72	72	72	0.016	1.001	11.695	1433
993	159.191	157.977		0.16	0.16	1.34	1.04	0.36	84	84	72	2.81	1.6	76	0.046	97	97	104.8	-0.88	1.40	15.4412279	122.19	176.86	167.61	54.34	176.53	142	72	72	72	0.016	1.001	11.703	1432
994	159.352	158.136		0.16	0.16	1.33	1.05	0.36	84	84	72	2.82	1.6	76	0.046	97	97	105.4	-0.62	1.36	15.4901409	121.72	176.52	167.33	54.52	176.24	140	72	72	72	0.015	1.001	11.371	1386
995	159.514	158.296		0.16	0.16	1.34	1.04	0.36	84	84	72	2.81	1.6	75	0.044	100	99	103.8	1.60	1.38	15.4799051	121.72	176.35	167.19	54.34	176.06	140	72	72	72	0.015	1.001	11.539	1406
996	159.675	158.455		0.16	0.16	1.33	1.04	0.36	84	84	72	2.81	1.6	75	0.042	102	101	103.7	0.11	1.44	14.1987658	121.33	176.11	166.99	54.53	175.86	140	72	72	72	0.015	1.001	12.019	1460
997	159.836	158.614		0.16	0.16	1.33	1.04	0.36	84	84	72	2.81	1.6	75	0.046	97	97	103.9	-0.22	1.35	15.4902916	121.17	175.85	167.32	54.43	175.60	139	72	72	72	0.014	1.001	11.217	1361
998	159.997	158.774		0.16	0.16	1.33	1.04	0.36	84	84	72	2.81	1.6	76	0.043	101	101	103.9	0.06	1.38	15.4999933	121.12	175.71	166.64	54.37	175.49	138	72	72	72	0.015	1.001	11.542	1400
999	160.159	158.933		0.16	0.16	1.33	1.04	0.36	84	84	72	2.81	1.6	76	0.043	101	100	104.9	-1.04	1.40	14.3629713	120.79	175.55	166.48	54.46	175.25	140	72	72	72	0.014	1.001	11.700	1415
1000	160.319	159.093		0.16	0.16	1.34	1.04	0.36	84	84	72	2.81	1.6	76	0.043	100	101	104.6	0.32	1.42	15.4521914	120.61	175.19	166.18	54.36	174.96	135	72	72	72	0.014	1.001	11.855	1431
1001	160.481	159.252		0.16	0.16	1.34	1.04	0.36	84	84	72	2.82	1.6	75	0.042	103	101	104.5	0.06	1.40	15.4133358	120.37	174.99	166.00	54.38	174.74	136	72	72	72	0.013	1.001	11.702	1410
1002	160.643	159.412		0.16	0.16	1.33	1.04	0.36	84	84	72	2.82	1.6	76	0.042	103	102	104.7	-0.19	1.38	15.4520359	120.16	174.81	165.81	54.43	174.59	159	73	72	72	0.038	1.001	11.539	1388
1003	160.804	159.572		0.16	0.16	1.33	1.03	0.36	84	84	72	2.84	1.6	86	0.042	103	103	104.4	0.36	1.46	15.5693283	120.06	174.57	165.60	54.27	174.33	152	73	73	72	0.021	1.001	12.193	1466
1004	160.965	159.730		0.16	0.16	1.33	1.04	0.36	84	84	72	2.83	1.6	78	0.043	101	100	103.9	0.49	1.38	15.5568256	119.67	174.24	165.32	54.34	174.02	148	72	72	72	0.019	1.001	11.540	1383
1005	161.127	159.889		0.16	0.16	1.34	1.05	0.36	84	84	72	2.8	1.6	76	0.043	101	100	103.6	0.28	1.40	15.5374336	119.41	174.27	165.30	54.53	173.94	146	72	72	72	0.017	1.001	11.701	1399
1006	161.288	160.049		0.16	0.16	1.33	1.05	0.36	84	84	72	2.8	1.6	75	0.042	102	102	103.7	-0.06	1.38	15.5265465	119.20	173.96	164.88	54.45	173.66	145	72	72	72	0.016	1.001	11.536	1377
1007	161.450	160.208		0.16	0.16	1.34	1.04	0.36	84	84	72	2.81	1.6	76	0.042	103	101	103.7	-0.04	1.38	15.4996281	119.19	173.70	164.59	54.24	173.43	142	72	72	72	0.015	1.001	11.538	1377
1008	161.612	160.368		0.16	0.16	1.34	1.05	0.36	84	84	72	2.8	1.6	75	0.045	99	98	103.7	-0.03	1.42	15.4654264	118.89	173.51	164.45	54.39	173.27	138	72	72	72	0.014	1.001	11.863	1412
1009	161.773	160.528		0.16	0.16	1.34	1.04	0.36	84	84	72	2.81	1.6	76	0.044	100	100	103.7	0.04	1.38	15.5373259	118.64	173.26	164.27	54.38	173.02	138	72	72	72	0.014	1.001	11.539	1371
1010	161.935	160.687		0.16	0.16	1.33	1.04	0.36	84	84	72	2.8	1.6	76	0.044	100	99	103.6	0.07	1.36	15.4902201	118.43	172.99	163.97	54.33	172.76	136	72	72	72	0.013	1.001	11.379	1349
1011	162.096	160.847		0.16	0.16	1.34	1.05	0.36	84	84	72	2.81	1.6	76	0.045	99	98	104.0	-0.38	1.40	15.4142351	118.17	172.86	164.13	54.41	172.59	136	72	72	72	0.013	1.001	11.707	1385
1012	162.258	161.007		0.16	0.16	1.33	1.05	0.36	84	84	72	2.8	1.6	76	0.047	97	96	103.5	0.46	1.38	15.4416294	118.06	172.67	163.59	54.32	172.38	133	72	72	72	0.012	1.001	11.537	1364
1013	162.419	161.166		0.16	0.16	1.33	1.05	0.36	84	84	72	2.81	1.6	75	0.042	102	101	103.8	-0.26	1.42	15.5049553	117.54	172.28	163.29	54.49	172.03	133	72	72	72	0.012	1.001	11.860	1396
1014	162.581	161.326		0.16	0.16	1.34	1.05	0.36	84	84	72	2.79	1.6	76	0.043	101	101	103.6	0.17	1.40	15.3571873	117.34	172.07	163.11	54.46	171.81	132	72	72	71	0.012	1.001	11.704	1375
1015	162.742	161.486		0.16	0.16	1.34	1.05	0.36	84	84	71	2.81	1.6	75	0.045	98	98	103.8	-0.19	1.38	15.4411287	117.38	171.91	162.90	54.21	171.59	130	72	72	72	0.011	1.001	11.540	1356
1016	162.904	161.645		0.16	0.16	1.34	1.05	0.36	84	84	72	2.8	1.6	75	0.042	103	101	103.8	0.00	1.48	15.5180445	116.97	171.72	162.77	54.46	171.43	129	72	72	71	0.011	1.001	12.347	1446
1017	163.065	161.805		0.16	0.16	1.34	1.05	0.36	84	84	71	2.8	1.6	75	0.045	98	98	103.9	-0.05	1.39	15.4703913	116.82	171.45	162.49	54.34	171.15	127	72	72	71	0.011	1.001	11.581	1354
1018	163.227	161.965		0.16	0.16	1.34	1.04	0.36	84	84	71	2.8	1.6	75	0.044	100	99	104.2	-0.35	1.35	15.540987	116.61	171.16	162.24	54.32	170.93	127	72	72	71	0.010	1.001	11.261	1315
1019	163.389	162.124		0.16	0.16	1.34	1.05	0.36	84	84	71	2.81	1.6	76	0.044	100	99	104.3	-0.13	1.41	15.4701681	116.28	170.98	162.10	54.44	170.72	126	72	72	71	0.011	1.001	11.714	1364
1020	163.550	162.284		0.16	0.16	1.34	1.05	0.36	84	84	71	2.8	1.6	76	0.044	100	100	103.9	0.47	1.34	15.5177536	115.95	170.61	161.75	54.40	170.35	126	72	72	71	0.010	1.001	11.196	1300
1021	163.712	162.444		0.16	0.16	1.34	1.04	0.36	84	84	71	2.8	1.6	76	0.046	98	97	104.2	-0.33	1.33	15.4322338	116.01	170.42	161.92	54.18	170.19	125	72	72	71	0.010	1.001	11.056	1284
1022	163.873	162.603		0.16	0.16	1.33	1.04	0.36	84	84	71	2.8	1.6	76	0.043	101	100	104.3	-0.05	1.42	15.3647432	115.67	170.28	161.45	54.33	169.99	122	72	72	71	0.009	1.001	11.850	1372
1023	164.035	162.763		0.16	0.16	1.34	1.05	0.36	84	84	71	2.8	1.6	75	0.045	99	98	104.0	0.27	1.46	15.4038258	115.42	170.00	161.20	54.34	169.76	125	72	72	72	0.010	1.001	12.185	1408
1024	164.196	162.923		0.16	0.16	1.34	1.05	0.36	84	84	72	2.81	1.5	75	0.045	98	98	104.4	-0.37	1.46	15.499876	115.08	169.74	161.33	54.34	169.43	122	72	72	71	0.009	1.001	12.179	1403
1025	164.358	163.082		0.16	0.16	1.34	1.04	0.36	84	84	71	2.79	1.6	75	0.044	100	99	103.9	0.49	1.48	15.5083513	114.87	169.46	160.67	54.31	169.18	120	72	72	71	0.009	1.001	12.362	1422
1026	164.519	163.242		0.16	0.16	1.34	1.05	0.36	84	84	71	2.8	1.6	75	0.043	101	101	104.3	-0.40	1.40	15.4700956	114.68	169.26	160.46	54.29	168.97	120	72	72	71	0.009	1.001	11.698	1343
1027	164.681	163.402		0.16	0.16	1.34	1.04	0.36	84	84	71	2.79	1.6	75	0.043	101	101	104.1	0.20	1.36	15.4391346	114.56	169.06	160.27	54.21	168.77	120	72	72	71	0.009	1.001	11.370	1304
1028	164.842	163.561		0.16	0.16	1.34	1.05	0.36	84	84	71	2.8	1.5	75	0.045	98	98	104.0	0.11	1.40	15.4700708	114.25	168.87	160.12	54.37	168.62	120	72	72	71	0.008	1.001	11.710	1339
1029	165.004	163.721		0.16	0.16	1.33	1.05	0.36	84	84	71	2.8	1.5	76	0.046	98	97	104.3	-0.35	1.42	15.537303	113.88	168.64	159.95	54.47	168.35	119	72	72	71	0.008	1.001	11.861	1352
1030	165.165	163.881		0.16	0.16	1.34	1.04	0.36	84	84	71	2.8	1.6	75	0.046	97	97	104.0	0.29	1.38	15.4701948	113.76	168.46	160.13	54.43	168.19	121	72	72	71	0.008	1.001	11.529	1313
1031	165.327	164.040		0.16	0.16	1.34	1.05	0.36	84	84	71	2.8	1.6	75	0.045	99	98	104.3	-0.26	1.46	15.4615936	113.49	168.05	158.93	54.31	167.80	118	72	72	71	0.008	1.001	12.186	1385
1032	165.488	164.201		0.16	0.16	1.34	1.05	0.36	84	84	71	2.81	1.6	75	0.041	103	104	104.3	-0.07	1.35	15.4033871	113.27	167.82	159.01	54.32	167.60	119	72	72	71	0.008	1.001	11.220	1273
1033	165.650	164.360		0.16	0.16	1.34	1.04	0.36	84	84	71	2.8	1.5	76	0.043	101	100	104.1	0.20	1.56	15.4616833	113.16	167.70	158.71	54.27	167.43	147	72	72	71	0.031	1.001	12.991	1472
1034	165.811	164.519		0.16	0.16	1.33	1.04	0.36	84	84	71	2.81	1.6	84	0.043	102	101	103.7	0.43	1.48	15.546813	112.69	167.33	158.24	54.38	167.07	141	72	72	71	0.015	1.001	12.346	1393
1035	165.973	164.679		0.16	0.16	1.34	1.04	0.36	84	84	71	2.8	1.6	78	0.046	98	98	103.9	-0.18	1.46	15.490531	112.59	167.15	158.05	54.27	166.86	137	72	72	71	0.013	1.001	12.183	1373
1036	166.134	164.838		0.16	0.16	1.34	1.05	0.36	84	84	71	2.79	1.6	76	0.042	102	101	103.5	0.42	1.40	15.5285702	112.34	166.89	158.12	54.25	166.59	135	72	72	71	0.013	1.001	11.703	1316
1037	166.296	164.998		0.16	0.16	1.34	1.05	0.36	84	84	71	2.8	1.5	76	0.042	103	102	104.3	-0.77	1.38	15.5862455	112.27	166.69	158.09	54.18	166.45	132	72	72	71	0.011	1.001	11.541	1297
1038	166.458	165.158		0.16	0.16	1.34	1.05	0.36	84	84	71	2.81	1.5	76	0.046	98	97	103.7	0.60	1.50	15.5301371	112.04	166.41	157.91	54.15	166.19	130	72	72	71	0.011	1.001	12.521	1404
1039	166.619	165.317		0.16	0.16	1.34	1.05	0.36	84	84	71	2.81	1.6	76	0.042	102	101	104.1	-0.40	1.54	15.4133739	111.50	166.14	157.11	54.40	165.90	128	72	72	71	0.010	1.001	12.834	1433
1040	166.781	165.477		0.16	0.16	1.34	1.05	0.36	84	84	71	2.79	1.6	76	0.042	103	102	103.9	0.12	1.56	15.4926043	111.36	165.84	157.46	54.30	165.65	125	72	72	71	0.010	1.001	13.002	1450
1041	166.942	165.637		0.16	0.16	1.34	1.04	0.36	84	84	71	2.81	1.5	76	0.042	102	102	103.8	0.17	1.50	15.47013	111.00	165.53	157.13	54.31	165.31	124	72	72	71	0.009	1.001	12.523	1392

Elapsed Time	Particulate Sampling Data																Fuel Weight, lb		Flow, gpm		Temperature Data, oF								Stack			
	Gas Meter Cubic Feet (1)	Gas Meter Cubic Feet (2)	Gas Meter Cubic Feet (amb)	Sample Rate, cfm (1)	Sample Rate, cfm (2)	Orifice dH (1)	Orifice dH (2)	Orifice dH (amb)	Meter oF (1)	Meter oF (2)	Meter oF (amb)	Meter Vac. In. Hg. (1)	Meter Vac. In. Hg. (2)	Dilution Tunnel Temp.	Dilution Tunnel dP	Pro. Rate (%) (1)	Pro. Rate (%) (2)	Scale Reading	Weight Change	Load Side Liquid Flow Rate	Boiler Side Liquid Flow Rate (optional)	Thermopile ΔT	Boiler to Heat Exch. Temp.	Heat Exch to Boiler Temp.	Inlet Load Temp.	Outlet Load Temp.	Stack	Filter (1)	Filter (2)	Ambient		Specific Heat of Inlet Water (BTU/lb-°F)	Mass Flow Rate of Inlet Water (lb/min)	Heat Output, Btu
1042	167.104	165.796		0.16	0.16	1.34	1.05	0.36	84	84	71	2.81	1.6	76	0.042	103	101	103.9	-0.11	1.52	15.4030867	110.84	165.38	156.63	54.30	165.15	124	72	72	71	0.009	1.001	12.670	1406
1043	167.265	165.956		0.16	0.16	1.34	1.05	0.36	84	84	71	2.79	1.6	76	0.045	99	98	104.1	-0.23	1.56	15.4031029	110.75	165.22	156.25	54.18	164.94	121	72	72	71	0.009	1.001	13.000	1442
1044	167.427	166.116		0.16	0.16	1.33	1.05	0.36	84	84	71	2.8	1.5	76	0.046	98	97	103.8	0.33	1.46	15.5083313	110.47	164.94	156.59	54.23	164.70	122	72	72	71	0.008	1.001	12.187	1348
1045	167.588	166.275		0.16	0.16	1.34	1.05	0.36	84	84	71	2.8	1.6	76	0.045	99	98	103.8	-0.07	1.50	15.4902468	110.28	164.78	156.40	54.23	164.52	119	72	72	71	0.008	1.001	12.510	1381
1046	167.750	166.435		0.16	0.16	1.34	1.05	0.36	84	84	71	2.79	1.6	76	0.048	96	95	103.9	-0.04	1.33	15.5435047	109.98	164.55	155.90	54.30	164.27	118	72	72	71	0.008	1.001	11.056	1217
1047	167.912	166.595		0.16	0.16	1.34	1.05	0.36	84	84	71	2.81	1.5	76	0.045	99	98	103.6	0.26	1.50	15.479948	109.83	164.22	155.29	54.12	163.96	118	72	72	71	0.008	1.001	12.512	1376
1048	168.073	166.755		0.16	0.16	1.34	1.05	0.36	84	84	71	2.8	1.5	75	0.043	101	101	104.1	-0.48	1.50	15.5062742	109.38	163.95	155.06	54.29	163.66	117	72	72	71	0.008	1.001	12.507	1370
1049	168.235	166.914		0.16	0.16	1.34	1.05	0.36	84	84	71	2.81	1.6	75	0.045	99	98	104.0	0.09	1.44	15.4523087	109.22	163.71	154.80	54.17	163.39	115	72	72	71	0.007	1.001	12.029	1315
1050	168.396	167.075		0.16	0.16	1.34	1.05	0.36	84	84	71	2.8	1.6	75	0.045	98	99	103.9	0.16	1.46	15.3849773	109.01	163.54	154.65	54.24	163.25	114	72	72	71	0.007	1.001	12.185	1330
1051	168.558	167.234		0.16	0.16	1.34	1.05	0.36	84	84	71	2.81	1.6	75	0.044	100	99	103.7	0.15	1.48	15.5178232	108.75	163.27	154.39	54.21	162.96	114	72	72	71	0.007	1.001	12.350	1345
1052	168.719	167.393		0.16	0.16	1.33	1.05	0.36	84	84	71	2.8	1.5	75	0.043	101	100	104.3	-0.55	1.50	15.5181341	108.47	162.89	154.06	54.13	162.60	114	72	72	71	0.007	1.001	12.512	1359
1053	168.881	167.554		0.16	0.16	1.34	1.05	0.36	84	84	71	2.79	1.6	76	0.041	104	104	104.2	0.08	1.50	15.4340277	108.35	162.66	153.82	54.03	162.39	114	72	72	71	0.007	1.001	12.513	1357
1054	169.042	167.713		0.16	0.16	1.34	1.05	0.36	84	84	71	2.81	1.5	76	0.044	100	99	104.2	-0.03	1.50	15.462039	108.08	162.48	153.72	54.14	162.22	113	72	72	71	0.006	1.001	12.511	1354
1055	169.204	167.872		0.16	0.16	1.34	1.05	0.36	84	84	71	2.81	1.6	76	0.045	99	98	104.3	-0.06	1.56	15.4081736	107.75	162.20	153.38	54.14	161.89	113	72	72	71	0.007	1.001	13.004	1403
1056	169.366	168.033		0.16	0.16	1.34	1.04	0.36	84	84	71	2.8	1.6	76	0.042	103	102	104.2	0.02	1.48	15.5648279	107.54	161.91	153.16	54.10	161.64	111	72	72	71	0.006	1.001	12.352	1330
1057	169.527	168.192		0.16	0.16	1.34	1.04	0.36	84	83	71	2.8	1.6	76	0.044	100	99	104.3	-0.10	1.40	15.4645367	107.26	161.65	152.91	54.11	161.38	110	72	72	71	0.006	1.001	11.705	1257
1058	169.689	168.351		0.16	0.16	1.34	1.05	0.36	84	84	71	2.79	1.6	76	0.046	98	97	103.8	0.56	1.52	15.5951958	107.25	161.44	152.81	53.95	161.20	111	72	72	71	0.006	1.001	12.679	1361
1059	169.850	168.512		0.16	0.16	1.34	1.05	0.36	84	84	71	2.8	1.6	76	0.043	101	101	104.0	-0.20	1.52	15.4976997	106.61	161.11	152.46	54.26	160.87	111	72	72	71	0.006	1.001	12.677	1353
1060	170.011	168.671		0.16	0.16	1.34	1.05	0.36	84	84	71	2.8	1.5	76	0.043	101	100	104.0	-0.04	1.48	15.5181122	106.52	161.01	152.28	54.16	160.68	111	72	72	71	0.006	1.001	12.351	1317
1061	170.172	168.831		0.16	0.16	1.34	1.05	0.36	84	83	71	2.79	1.6	76	0.044	100	100	103.9	0.13	1.54	15.4769258	106.30	160.63	152.05	54.08	160.38	110	72	72	71	0.005	1.001	12.832	1366
1062	170.333	168.991		0.16	0.16	1.34	1.04	0.36	84	83	71	2.79	1.5	76	0.044	100	100	104.1	-0.23	1.53	15.422884	106.24	160.54	151.92	53.99	160.23	141	73	72	71	0.027	1.001	12.777	1359
1063	170.494	169.150		0.16	0.16	1.33	1.04	0.36	84	83	71	2.82	1.6	87	0.044	101	100	104.0	0.09	1.48	15.5083628	105.63	160.14	151.58	54.26	159.89	182	73	72	71	0.028	1.001	12.344	1306
1064	170.655	169.309		0.16	0.16	1.34	1.05	0.36	84	83	71	2.82	1.6	89	0.046	99	98	103.2	0.86	1.50	15.4703732	105.58	160.02	151.54	54.21	159.79	210	73	72	71	0.033	1.001	12.512	1323
1065	170.817	169.468		0.16	0.16	1.34	1.04	0.36	84	83	71	2.81	1.6	93	0.041	105	104	102.0	1.13	1.53	15.4704494	105.64	160.09	151.46	54.10	159.74	232	73	72	71	0.032	1.001	12.798	1354
1066	170.978	169.627		0.16	0.16	1.35	1.06	0.36	84	83	71	2.81	1.6	96	0.046	99	99	101.0	1.02	1.54	15.508791	106.06	160.52	151.85	54.09	160.14	246	74	73	71	0.037	1.001	12.834	1363
1067	171.139	169.787		0.16	0.16	1.35	1.05	0.36	84	83	71	2.81	1.6	100	0.042	104	104	99.7	1.30	1.49	15.4797211	106.60	161.07	152.28	54.02	160.63	254	74	73	71	0.035	1.001	12.431	1327
1068	171.300	169.945		0.16	0.16	1.35	1.05	0.36	84	84	71	2.81	1.6	101	0.042	104	103	99.3	0.38	1.52	15.5459967	107.23	161.74	152.94	54.11	161.34	260	74	73	71	0.038	1.001	12.667	1360
1069	171.461	170.104		0.16	0.16	1.35	1.05	0.36	84	84	71	2.81	1.6	103	0.043	103	103	98.1	1.28	1.45	15.4230213	107.80	162.42	153.52	54.17	161.96	265	75	73	71	0.040	1.001	12.085	1304
1070	171.622	170.264		0.16	0.16	1.35	1.04	0.36	84	84	71	2.82	1.6	105	0.043	103	103	97.6	0.43	1.52	15.4796257	108.68	163.28	154.36	54.16	162.84	268	75	74	71	0.040	1.001	12.707	1383
1071	171.783	170.422		0.16	0.16	1.35	1.05	0.36	84	84	71	2.81	1.6	106	0.042	105	103	96.9	0.75	1.43	15.4797878	109.49	163.95	155.00	54.08	163.57	271	75	74	71	0.036	1.001	11.929	1308
1072	171.944	170.581		0.16	0.16	1.35	1.05	0.36	84	84	71	2.81	1.6	107	0.043	104	103	95.8	1.06	1.54	15.439662	110.35	164.78	155.93	53.98	164.33	274	76	74	71	0.040	1.001	12.831	1418
1073	172.105	170.740		0.16	0.16	1.34	1.04	0.36	84	84	71	2.83	1.6	107	0.042	105	104	95.4	0.42	1.54	15.5208111	111.08	165.68	156.56	54.17	165.26	276	76	74	71	0.043	1.001	12.864	1431
1074	172.266	170.899		0.16	0.16	1.34	1.05	0.36	84	84	71	2.83	1.6	108	0.042	105	104	94.0	1.43	1.58	15.5373755	112.09	166.61	157.39	54.08	166.16	279	76	74	71	0.043	1.001	13.186	1480
1075	172.426	171.058		0.16	0.16	1.34	1.05	0.36	84	84	71	2.82	1.6	109	0.042	104	104	92.9	1.05	1.50	15.5467186	113.03	167.61	158.37	54.14	167.17	282	77	75	71	0.043	1.001	12.506	1415
1076	172.587	171.216		0.16	0.16	1.34	1.05	0.36	84	84	71	2.84	1.6	110	0.043	104	103	92.4	0.52	1.52	15.5180416	114.21	168.61	159.68	53.97	168.18	285	77	75	71	0.043	1.001	12.666	1448
1077	172.747	171.375		0.16	0.16	1.34	1.05	0.36	84	84	71	2.84	1.6	110	0.042	105	104	91.6	0.75	1.50	15.4196167	114.98	169.76	160.29	54.32	169.31	288	77	75	71	0.045	1.001	12.507	1440
1078	172.908	171.534		0.16	0.16	1.34	1.04	0.36	84	84	71	2.82	1.6	112	0.042	105	105	90.6	1.08	1.52	15.3936539	116.23	170.85	161.32	54.16	170.38	291	78	76	71	0.046	1.001	12.669	1474
1079	173.068	171.692		0.16	0.16	1.34	1.04	0.36	84	84	71	2.83	1.6	113	0.042	105	104	89.2	1.36	1.54	15.5468016	117.34	172.09	162.47	54.24	171.58	295	78	76	71	0.047	1.001	12.827	1507
1080	173.228	171.851		0.16	0.16	1.33	1.04	0.36	84	84	71	2.84	1.6	114	0.042	105	105	88.1	1.12	1.50	15.4703121	118.56	173.22	163.51	54.20	172.76	298	78	76	72	0.045	1.001	12.507	1485
1081	173.388	172.009		0.16	0.16	1.33	1.04	0.36	84	84	72	2.83	1.6	114	0.043	104	103	87.0	1.13	1.48	15.4616785	119.87	174.58	164.63	54.17	174.04	298	79	77	72	0.047	1.001	12.345	1482
1082	173.548	172.166		0.16	0.16	1.33	1.04	0.36	84	84	72	2.84	1.6	114	0.043	104	102	86.3	0.66	1.50	15.5082998	121.11	175.84	165.80	54.20	175.32	299	79	77	72	0.046	1.001	12.510	1517
1083	173.707	172.325		0.16	0.16	1.33	1.03	0.36	84	84	72	2.84	1.6	114	0.041	105	106	85.0	1.27	1.46	15.5083904	122.35	177.04	166.90	54.14	176.49	300	79	77	72	0.050	1.001	12.185	1493
1084	173.867	172.482		0.16	0.16	1.33	1.03	0.36	84	84	72	2.84	1.6	115	0.043	104	102	83.7	1.30	1.46	15.4416294	123.77	178.30	168.16	54.03	177.80	303	79	78	71	0.045	1.001	12.185	1510
1085	174.028	172.640		0.16	0.16	1.33	1.03	0.36	84	84	71	2.86	1.6	116	0.042	106	104	82.3	1.37	1.52	15.1076307	124.89	179.55	169.30	54.16	179.05	302	80	78	72	0.045	1.001	12.669	1584
1086	174.188	172.797		0.16	0.16	1.33	1.03	0.36	83	84	72	2.84	1.6	114	0.044	103	101	81.1	1.29	1.52	15.3674021	126.15	180.72	170.39	54.08	180.23	301	80	78	72	0.048	1.001	12.666	1600
1087	174.348	172.954		0.16	0.16	1.33	1.03	0.36	83	84	72	2.86	1.6	114	0.042	105	103	79.9	1.12	1.48	14.1888342	127.23	181.97	171.51	54.23	181.46	293	80	77	71	0.037	1.001	12.344	1572
1088	174.508	173.111		0.16	0.16	1.33	1.03	0.36	83	84	71	2.84	1.6	106	0.042	104	103	78.4	1.57	1.44	15.5075026	128.67	183.11	172.68	54.01	182.68	262	79	76	71	0.034	1.001	12.015	1548
1089	174.669	173.268		0.16	0.16	1.32	1.02	0.36	84	84	71	2.85	1.6	92	0.046	99	97	78.2	0.16	1.50	9.18378067	129.12	183.74	173.19	54.17	183.29	247	78	76	72	0.033	1.001	12.504	1617
1090	174.830	173.426		0.16	0.16	1.32	1.02	0.36	84	84	72	2.84	1.6	88	0.046	99	97	77.4	0.82	1.44	11.5974712	129.39	184.04	173.47	54.24	183.63	235	77	75	71	0.030	1.001	12.020	1557
1091	174.991	173.583		0.16	0.16	1.32	1.02	0.36	84	84	71	2.85	1.6	86	0.044	101	99	77.0	0.41	1.40	10.3514271	129.61	184.27	174.30	54.27	183.88	229	77	75	71	0.031	1.001	11.699	1518
1092	175.152	173.741		0.16	0.16	1.32	1.02	0.36	83	84	71	2.84	1.6	85	0.042	103	101	76.4	0.57	1.44	14.0448799	129.97	184.58	174.66	54.25	184.22	224	76	75	72	0.033	1.001	12.005	1562
1093	175.312	173.901		0.16	0.16	1.32	1.06	0.36	84	84	72	2.83	1.6	80	0.043	101	101	76.3	0.12	1.36	10.9043818	130.22	184.82	174.90	54.25	184.47	219	76	75	72	0.032	1.001	11.374	1483
1094	175.473	174.062		0.16	0.16	1.32	1.06	0.36	84	84	72	2.84	1.6	80	0.044	100	101	76.0	0.26	1.48	10.3036013	130.43	184.92	174.97	54.17	184.59	215	76	75	72	0.030	1.001	12.333	1610
1095	175.634	174.223		0.16	0.16	1.33	1.07	0.36	84	84	72	2.83	1.6	79	0.042	102	103	75.8	0.21	1.46	11.4525681	130.60	185.01	175.06	54.06	184.66	212	76	75	72	0.031	1.001	12.181	1593
1096	175.795	174.384		0.16	0.16	1.32	1.07	0.36	84	84	72	2.84	1.6	78	0.046	98	98	75.4	0.42	1.34	10.2667456	130.31	184.94	175.04	54.38	184.68	209	75	75	71	0.030	1.001	11.206	1462
1097	175.956	174.544		0.16	0.16	1.33	1.07	0.36	84	84	71	2.83	1.6	78	0.043	101	101	75.3	0.06	1.34	9.51847744	130.45	185.03	175.53	54.27	184.72	207	75	75	72	0.029	1.001	11.209	1464
1098	176.118	174.706		0.16	0.16	1.33	1.08	0.36	84	84	72	2.81	1.6	77	0.044	100	101	75.3	0.02	1.38	8.3520155	130.42	185.10	175.52	54.35	184.77	206	75	74	71	0.031	1.001	11.533	1506
1099	176.279	174.868		0.16	0.16	1.33	1.08	0.36	84	84	71	2.79	1.6	76	0.047	96	97	75.0	0.36	1.40	9.02756119	130.38	184.95	175.38	54.23	184.61	205	75	74	71	0.035	1.001	11.695	1527
1100	176.440	175.030		0.16	0.16	1.33	1.08	0.36	84	84	71	2.81	1.6	76	0.047	96	97	74.7	0.26	1.38	8.32195568	130.34	184.79	175.24	54.18	184.51	203	75	74	71	0.037	1.001	11.529	1504
1101	176.601	175.191		0.16	0.16	1.33	1.08	0.36	84	84	71	2.81	1.6	76	0.043	101	101	74.7	0.05	1.38	7.85360622	130.17	184.74	175.14	54.26	184.42	201	74	74	72	0.037	1.001	11.533	1503
1102	176.762	175.353		0.16	0.16	1.33	1.07	0.36	84	84	72	2.81	1.6	76	0.043	101	102	74.9	-0.29	1.42	8.44458389	130.01	184.70	175.16	54.37	184.38	198	74	74	72	0.038	1.001	11.853	1543
1103	176.923	175.515		0.16	0.16	1.33	1.07	0.36	84	84	72	2.8	1.6	75	0.044	100	101	74.9	0.09	1.33	8.3442812	130.06	184.66	175.09	54.29	184.34	196	74	74	71	0.037	1.001	11.057	1440

Elapsed Time	Particulate Sampling Data																	Fuel Weight, lb		Flow, gpm		Temperature Data, oF									Stack			
	Gas Meter Cubic Feet (1)	Gas Meter Cubic Feet (2)	Gas Meter Cubic Feet (amb)	Sample Rate, cfm (1)	Sample Rate, cfm (2)	Orifice dH (1)	Orifice dH (2)	Orifice dH (amb)	Meter oF (1)	Meter oF (2)	Meter oF (amb)	Meter Vac. In. Hg. (1)	Meter Vac. In. Hg. (2)	Dilution Tunnel Temp.	Dilution Tunnel dP	Pro. Rate (%) (1)	Pro. Rate (%) (2)	Scale Reading	Weight Change	Load Side Liquid Flow Rate	Boiler Side Liquid Flow Rate (optional)	Thermopile ΔT	Boiler to Heat Exch. Temp.	Heat Exch to Boiler Temp.	Inlet Load Temp.	Outlet Load Temp.	Stack	Filter (1)	Filter (2)	Ambient		Specific Heat of Inlet Water (BTU/lb-°F)	Mass Flow Rate of Inlet Water (lb/min)	Heat Output, Btu
1104	177.085	175.677		0.16	0.16	1.33	1.08	0.36	84	84	71	2.81	1.6	75	0.045	99	100	74.4	0.43	1.35	7.14709425	129.92	184.59	175.08	54.37	184.28	194	74	74	71	0.037	1.001	11.215	1459
1105	177.246	175.838		0.16	0.16	1.33	1.08	0.36	84	84	71	2.8	1.6	75	0.044	100	100	74.2	0.22	1.40	11.8442602	129.77	184.51	174.98	54.41	184.18	191	74	74	71	0.037	1.001	11.697	1520
1106	177.407	176.000		0.16	0.16	1.33	1.07	0.36	83	84	71	2.81	1.6	75	0.044	100	101	74.4	-0.15	1.40	10.7259722	129.91	184.39	174.93	54.21	184.12	190	74	73	71	0.036	1.001	11.697	1521
1107	177.568	176.162		0.16	0.16	1.32	1.08	0.36	84	84	71	2.79	1.6	75	0.043	101	102	74.0	0.31	1.38	12.9959059	129.68	184.18	174.74	54.24	183.92	188	74	73	71	0.035	1.001	11.527	1497
1108	177.729	176.324		0.16	0.16	1.33	1.08	0.36	83	84	71	2.8	1.6	75	0.041	103	104	74.0	0.07	1.34	9.92136955	129.45	184.15	174.93	54.36	183.81	186	73	73	71	0.035	1.001	11.212	1453
1109	177.890	176.485		0.16	0.16	1.33	1.08	0.36	83	84	71	2.81	1.6	75	0.046	98	98	73.9	0.05	1.40	11.6047964	129.59	184.19	174.60	54.25	183.85	184	73	73	71	0.034	1.001	11.701	1518
1110	178.051	176.647		0.16	0.16	1.33	1.08	0.36	83	84	71	2.79	1.6	75	0.046	98	98	74.3	-0.36	1.34	9.55984402	129.31	183.97	174.59	54.33	183.64	183	73	73	71	0.033	1.001	11.210	1451
1111	178.213	176.810		0.16	0.16	1.33	1.08	0.36	84	84	71	2.81	1.6	75	0.047	97	98	73.8	0.45	1.38	12.8762522	129.14	183.81	174.42	54.34	183.48	181	73	73	71	0.032	1.001	11.535	1491
1112	178.374	176.971		0.16	0.16	1.33	1.07	0.36	84	84	71	2.81	1.6	75	0.047	96	97	73.8	0.02	1.36	8.41922092	129.09	183.80	174.44	54.41	183.50	179	73	73	71	0.032	1.001	11.359	1468
1113	178.535	177.133		0.16	0.16	1.33	1.08	0.36	84	84	71	2.79	1.6	75	0.043	101	102	73.7	0.10	1.36	6.46058846	128.88	183.50	174.17	54.34	183.21	177	73	73	71	0.031	1.001	11.367	1467
1114	178.696	177.295		0.16	0.16	1.33	1.08	0.36	84	84	71	2.81	1.6	75	0.044	100	101	73.4	0.31	1.38	11.5956583	128.62	183.57	174.19	54.55	183.18	175	73	73	71	0.030	1.001	11.540	1486
1115	178.857	177.457		0.16	0.16	1.33	1.07	0.36	84	84	71	2.81	1.6	75	0.044	100	101	73.8	-0.38	1.38	11.4930916	128.75	183.38	174.08	54.32	183.06	176	73	73	71	0.030	1.001	11.531	1486
1116	179.018	177.618		0.16	0.16	1.34	1.08	0.36	84	84	71	2.8	1.6	75	0.046	97	98	74.0	-0.19	1.36	10.6599655	128.60	183.29	173.98	54.37	182.97	174	73	73	71	0.029	1.001	11.319	1457
1117	179.180	177.780		0.16	0.16	1.34	1.08	0.36	84	84	71	2.8	1.6	75	0.044	100	101	73.6	0.37	1.42	11.9219189	128.36	183.08	173.76	54.41	182.77	173	73	72	71	0.029	1.001	11.856	1524
1118	179.341	177.942		0.16	0.16	1.33	1.08	0.36	84	84	71	2.81	1.6	75	0.046	97	98	73.7	-0.06	1.36	12.9426661	128.21	182.88	173.59	54.37	182.58	171	72	72	71	0.028	1.001	11.315	1452
1119	179.502	178.104		0.16	0.16	1.33	1.08	0.36	83	84	71	2.81	1.6	75	0.042	102	103	73.6	0.06	1.36	9.0056839	128.10	182.87	173.57	54.42	182.53	169	72	72	71	0.027	1.001	11.377	1459
1120	179.663	178.265		0.16	0.16	1.33	1.08	0.36	83	84	71	2.79	1.6	75	0.042	102	102	74.0	-0.39	1.33	12.8745699	128.06	182.61	173.41	54.31	182.37	168	72	72	71	0.026	1.001	11.070	1419
1121	179.824	178.427		0.16	0.16	1.33	1.08	0.36	83	84	71	2.8	1.6	75	0.045	99	100	73.8	0.20	1.38	14.1687059	127.87	182.52	173.12	54.31	182.18	167	72	72	71	0.026	1.001	11.502	1473
1122	179.986	178.589		0.16	0.16	1.33	1.08	0.36	83	84	71	2.81	1.6	75	0.045	99	100	73.5	0.28	1.34	15.4404659	127.66	182.33	173.11	54.39	182.05	166	72	72	71	0.025	1.001	11.212	1433
1123	180.147	178.751		0.16	0.16	1.33	1.08	0.36	83	84	71	2.81	1.6	75	0.047	96	97	73.6	-0.05	1.31	14.2269936	127.54	182.26	173.05	54.45	181.99	166	72	72	71	0.025	1.001	10.945	1398
1124	180.308	178.913		0.16	0.16	1.33	1.08	0.36	83	84	71	2.81	1.6	75	0.044	100	101	73.5	0.08	1.38	12.9068117	127.41	182.06	172.81	54.33	181.75	167	72	72	71	0.025	1.001	11.531	1471
1125	180.468	179.075		0.16	0.16	1.33	1.08	0.36	83	84	71	2.79	1.6	75	0.041	103	104	73.6	-0.12	1.35	13.0618677	127.28	182.04	172.72	54.42	181.70	162	72	72	71	0.024	1.001	11.255	1434
1126	180.628	179.237		0.16	0.16	1.34	1.08	0.36	83	84	71	2.8	1.6	75	0.043	100	102	73.7	-0.14	1.33	10.7631016	127.00	181.71	172.53	54.42	181.42	163	72	72	71	0.024	1.001	11.076	1408
1127	180.788	179.399		0.16	0.16	1.34	1.08	0.36	83	84	71	2.8	1.6	75	0.043	100	102	73.5	0.23	1.31	14.1499023	126.88	181.56	172.50	54.45	181.33	161	72	72	71	0.023	1.001	10.903	1385
1128	180.948	179.560		0.16	0.16	1.32	1.06	0.36	83	84	71	2.78	1.6	75	0.044	99	100	74.0	-0.48	1.36	11.608098	126.65	181.33	172.19	54.44	181.09	158	72	72	71	0.022	1.001	11.374	1442
1129	181.109	179.719		0.16	0.16	1.31	1.04	0.36	83	84	71	2.79	1.6	75	0.044	100	99	73.5	0.52	1.35	14.1612129	126.64	181.33	172.11	54.38	181.02	157	72	72	71	0.022	1.001	11.280	1430
1130	181.269	179.878		0.16	0.16	1.31	1.04	0.36	83	84	71	2.77	1.6	75	0.044	99	99	73.9	-0.40	1.33	12.9283228	126.39	181.16	171.96	54.45	180.84	156	72	72	71	0.021	1.001	11.092	1404
1131	181.429	180.037		0.16	0.16	1.32	1.04	0.36	83	84	71	2.79	1.6	75	0.045	98	98	73.5	0.40	1.34	14.1685009	126.20	180.91	171.77	54.41	180.61	157	72	72	71	0.021	1.001	11.207	1416
1132	181.589	180.196		0.16	0.16	1.32	1.04	0.36	83	84	71	2.78	1.6	74	0.046	97	97	73.7	-0.22	1.32	13.1654797	126.04	180.83	171.73	54.53	180.57	153	72	72	71	0.021	1.001	10.975	1385
1133	181.749	180.356		0.16	0.16	1.32	1.04	0.36	83	84	71	2.78	1.6	74	0.045	98	98	73.3	0.35	1.33	15.4511681	125.79	180.56	171.51	54.49	180.28	153	72	72	71	0.020	1.001	11.049	1392
1134	181.909	180.514		0.16	0.16	1.31	1.04	0.36	83	84	71	2.79	1.6	74	0.044	99	98	73.8	-0.43	1.36	14.2270451	125.85	180.43	171.34	54.29	180.14	153	72	72	71	0.019	1.001	11.368	1432
1135	182.069	180.674		0.16	0.16	1.31	1.03	0.36	83	84	71	2.79	1.6	74	0.041	103	103	73.4	0.35	1.36	14.3396339	125.49	180.23	171.15	54.47	179.97	154	72	72	71	0.019	1.001	11.362	1428
1136	182.229	180.832		0.16	0.16	1.32	1.04	0.36	83	84	71	2.8	1.6	74	0.044	99	98	73.5	-0.04	1.38	15.499444	125.19	179.96	170.88	54.45	179.64	151	72	72	71	0.019	1.001	11.525	1445
1137	182.389	180.991		0.16	0.16	1.31	1.04	0.36	83	84	71	2.8	1.6	75	0.043	100	100	74.3	-0.84	1.33	15.4316235	125.15	179.82	170.68	54.32	179.47	151	72	72	71	0.018	1.001	11.047	1384
1138	182.549	181.151		0.16	0.16	1.31	1.04	0.36	83	84	71	2.79	1.6	75	0.045	98	98	73.7	0.63	1.31	15.4695597	124.91	179.60	170.60	54.42	179.33	147	72	72	71	0.017	1.001	10.883	1361
1139	182.709	181.309		0.16	0.16	1.31	1.04	0.36	83	84	71	2.8	1.6	75	0.043	100	99	73.8	-0.11	1.38	15.5180264	124.85	179.47	170.45	54.32	179.17	145	72	72	71	0.017	1.001	11.523	1440
1140	182.869	181.468		0.16	0.16	1.31	1.04	0.36	83	84	71	2.79	1.6	75	0.043	100	100	74.0	-0.26	1.40	15.4518442	124.59	179.16	170.14	54.29	178.88	148	72	72	71	0.017	1.001	11.672	1456
1141	183.029	181.627		0.16	0.16	1.31	1.03	0.36	83	84	71	2.79	1.6	76	0.043	100	100	73.4	0.61	1.36	14.1508217	124.39	178.99	170.05	54.36	178.75	147	72	72	72	0.016	1.001	11.367	1416
1142	183.189	181.786		0.16	0.16	1.31	1.04	0.36	83	84	72	2.78	1.6	76	0.041	103	102	73.7	-0.25	1.36	14.1691856	124.03	178.73	169.69	54.38	178.41	145	72	72	72	0.016	1.001	11.366	1412
1143	183.349	181.946		0.16	0.16	1.32	1.04	0.36	83	84	72	2.78	1.6	76	0.043	100	101	73.8	-0.12	1.34	15.3653021	123.87	178.56	169.64	54.44	178.31	143	72	72	72	0.016	1.001	11.207	1390
1144	183.509	182.104		0.16	0.16	1.32	1.04	0.36	83	84	72	2.79	1.6	75	0.044	99	98	73.9	-0.06	1.34	12.9078598	123.68	178.34	169.40	54.41	178.09	144	72	72	72	0.015	1.001	11.207	1388
1145	183.670	182.263		0.16	0.16	1.31	1.04	0.36	83	84	72	2.8	1.6	76	0.046	98	97	73.3	0.52	1.32	15.4794683	123.29	178.10	169.14	54.55	177.85	143	72	72	72	0.015	1.001	11.036	1362
1146	183.830	182.422		0.16	0.16	1.32	1.04	0.36	83	84	72	2.79	1.6	75	0.045	98	98	73.2	0.15	1.40	12.8777485	123.16	177.93	169.02	54.54	177.69	141	72	72	72	0.015	1.001	11.687	1441
1147	183.990	182.581		0.16	0.16	1.31	1.04	0.36	83	84	72	2.8	1.6	76	0.045	98	98	73.8	-0.63	1.42	15.5079708	123.01	177.74	168.83	54.47	177.49	141	72	72	72	0.015	1.001	11.846	1459
1148	184.150	182.739		0.16	0.16	1.32	1.04	0.36	83	84	72	2.79	1.6	76	0.045	98	97	73.5	0.30	1.34	15.4229269	122.77	177.55	168.67	54.51	177.28	138	72	72	72	0.014	1.001	11.188	1375
1149	184.310	182.899		0.16	0.16	1.32	1.03	0.36	83	84	72	2.79	1.6	75	0.046	97	97	73.7	-0.21	1.34	12.8698616	122.66	177.28	168.40	54.37	177.02	135	72	72	72	0.013	1.001	11.191	1374
1150	184.470	183.057		0.16	0.16	1.32	1.04	0.36	83	84	72	2.79	1.6	76	0.046	97	96	73.9	-0.16	1.36	15.4642324	122.36	177.10	168.18	54.44	176.81	139	72	72	72	0.013	1.001	11.356	1391
1151	184.629	183.217		0.16	0.16	1.31	1.04	0.36	83	84	72	2.8	1.6	76	0.046	96	97	73.5	0.37	1.32	14.2074575	122.14	176.94	168.05	54.50	176.64	136	72	72	72	0.013	1.001	11.036	1350
1152	184.789	183.375		0.16	0.16	1.31	1.04	0.36	83	84	72	2.78	1.6	75	0.047	96	95	73.8	-0.30	1.40	15.4901638	121.87	176.64	167.83	54.49	176.36	138	72	72	72	0.013	1.001	11.681	1425
1153	184.949	183.534		0.16	0.16	1.31	1.04	0.36	84	84	72	2.78	1.6	75	0.044	99	99	73.8	0.06	1.36	15.3850565	121.62	176.49	167.67	54.57	176.20	134	72	72	72	0.013	1.001	11.358	1383
1154	185.109	183.693		0.16	0.16	1.31	1.04	0.36	84	84	72	2.79	1.6	75	0.042	101	101	73.7	0.08	1.34	15.3936539	121.59	176.30	167.53	54.41	176.00	134	72	72	72	0.013	1.001	11.197	1363
1155	185.268	183.851		0.16	0.16	1.31	1.04	0.36	84	84	72	2.78	1.6	75	0.043	99	99	73.8	-0.11	1.36	15.4996958	121.31	176.04	167.29	54.48	175.80	132	72	72	72	0.012	1.001	11.362	1380
1156	185.428	184.010		0.16	0.16	1.31	1.04	0.36	83	84	72	2.78	1.6	75	0.043	100	100	73.9	-0.09	1.38	15.4135189	121.21	175.84	167.06	54.38	175.58	131	72	72	72	0.012	1.001	11.529	1399
1157	185.588	184.170		0.16	0.16	1.32	1.03	0.36	84	84	72	2.79	1.6	74	0.045	98	98	73.7	0.17	1.42	15.452013	120.88	175.60	166.81	54.47	175.35	134	72	72	72	0.012	1.001	11.852	1434
1158	185.749	184.328		0.16	0.16	1.31	1.04	0.36	84	84	72	2.8	1.6	75	0.046	97	96	74.0	-0.25	1.34	15.4905214	120.74	175.35	166.67	54.41	175.15	155	74	73	72	0.022	1.001	11.202	1354
1159	185.909	184.487		0.16	0.16	1.31	1.03	0.36	84	84	72	2.8	1.6	84	0.043	101	101	73.5	0.43	1.40	15.5286016	120.29	175.08	166.37	54.54	174.83	150	72	71	72	0.018	1.001	11.684	1407
1160	186.070	184.645		0.16	0.16	1.31	1.04	0.36	84	84	72	2.77	1.5	76	0.043	101	99	73.3	0.25	1.36	15.4870968	120.27	174.90	166.17	54.38	174.64	147	72	72	72	0.016	1.001	11.363	1368
1161	186.230	184.804		0.16	0.16	1.32	1.04	0.36	84	84	72	2.78	1.6	75	0.043	100	100	72.8	0.44	1.36	15.5286264	119.94	174.75	166.05	54.54	174.48	143	72	72	72	0.015	1.001	11.360	1364
1162	186.390	184.963		0.16	0.16	1.32	1.04	0.36	84	84	72	2.77	1.6	76	0.043	100	100	73.1	-0.23	1.36	15.4526787	119.79	174.59	165.92	54.55	174.34	141	72	72	72	0.015	1.001	11.353	1362
1163	186.550	185.122		0.16	0.16	1.32	1.04	0.36	84	84	72	2.76	1.5	75	0.043	100	100	73.3	-0.27	1.36	15.364851	119.65	174.35	165.72	54.46	174.11	139	72	72	72	0.014	1.001	11.361	1361
1164	186.711	185.281		0.16	0.16	1.31	1.04	0.36	84	84	72	2.76	1.5	76	0.043	101	100	73.2	0.11	1.34	15.5373955	119.44	174.17	165.51	54.47	173.90	138	72	72	72	0.013	1.001	11.199	1339
1165	186.871	185.441		0.16	0.16	1.32	1.04	0.36	84	84	72	2.77	1.5	76	0.043	100	101	72.8	0.38	1.32	15.4617329	119.24	173.89	165.28	54.43	173.67	136	72	72	72	0.012	1.001	11.043	1318

Elapsed Time	Particulate Sampling Data																Fuel Weight, lb		Flow, gpm		Temperature Data, oF								Stack			
	Gas Meter Cubic Feet (1)	Gas Meter Cubic Feet (2)	Gas Meter Cubic Feet (amb)	Sample Rate, cfm (1)	Sample Rate, cfm (2)	Orifice dH (1)	Orifice dH (2)	Orifice dH (amb)	Meter oF (1)	Meter oF (2)	Meter oF (amb)	Meter Vac. In. Hg. (1)	Meter Vac. In. Hg. (2)	Dilution Tunnel Temp.	Dilution Tunnel dP	Pro. Rate (%) (1)	Pro. Rate (%) (2)	Scale Reading	Weight Change	Load Side Liquid Flow Rate	Boiler Side Liquid Flow Rate (optional)	Thermopile ΔT	Boiler to Heat Exch. Temp.	Heat Exch to Boiler Temp.	Inlet Load Temp.	Outlet Load Temp.	Stack	Filter (1)	Filter (2)	Ambient		Specific Heat of Inlet Water (BTU/lb-°F)	Mass Flow Rate of Inlet Water (lb/min)	Heat Output, Btu
1166	187.031	185.599		0.16	0.16	1.32	1.04	0.36	84	84	72	2.77	1.5	76	0.043	100	99	73.1	-0.22	1.36	15.4615259	118.83	173.66	165.03	54.59	173.42	132	72	72	72	0.012	1.001	11.362	1352
1167	187.191	185.759		0.16	0.16	1.32	1.04	0.36	84	84	72	2.76	1.5	76	0.042	101	102	73.2	-0.11	1.32	15.3850269	118.66	173.48	164.88	54.52	173.19	133	72	72	72	0.011	1.001	11.035	1311
1168	187.351	185.917		0.16	0.16	1.32	1.04	0.36	84	84	72	2.77	1.5	76	0.042	101	101	73.2	0.01	1.36	15.4866638	118.44	173.21	164.64	54.52	172.96	132	72	72	72	0.011	1.001	11.358	1347
1169	187.511	186.076		0.16	0.16	1.31	1.04	0.36	84	84	72	2.77	1.5	76	0.046	97	97	73.5	-0.34	1.36	15.5165386	118.28	173.04	164.45	54.49	172.77	128	72	72	72	0.010	1.001	11.357	1345
1170	187.671	186.236		0.16	0.16	1.31	1.04	0.36	84	84	72	2.78	1.5	76	0.046	97	97	73.4	0.12	1.34	15.4135685	117.97	172.83	164.19	54.58	172.55	128	73	72	72	0.011	1.001	11.199	1323
1171	187.831	186.394		0.16	0.16	1.31	1.04	0.36	84	84	72	2.77	1.5	76	0.043	100	99	73.3	0.10	1.34	15.4519978	117.79	172.60	164.07	54.57	172.36	128	73	72	72	0.010	1.001	11.199	1321
1172	187.991	186.553		0.16	0.16	1.31	1.04	0.36	84	84	72	2.77	1.6	77	0.038	107	107	73.3	0.02	1.34	15.4798985	117.41	172.28	163.70	54.58	171.99	126	73	72	72	0.010	1.001	11.186	1315
1173	188.151	186.713		0.16	0.16	1.31	1.04	0.36	84	84	72	2.77	1.5	76	0.036	109	110	73.2	0.02	1.40	15.490139	117.45	172.20	163.68	54.51	171.96	126	73	72	72	0.010	1.001	11.670	1372
1174	188.311	186.872		0.16	0.16	1.32	1.04	0.36	84	84	72	2.76	1.5	76	0.036	109	109	73.2	0.00	1.28	15.3768806	117.12	171.93	163.57	54.56	171.69	127	73	72	72	0.009	1.001	10.706	1256
1175	188.472	187.031		0.16	0.16	1.32	1.04	0.36	84	84	72	2.77	1.6	77	0.037	109	108	73.3	-0.06	1.34	15.4413252	116.96	171.71	163.22	54.50	171.46	125	73	72	73	0.010	1.001	11.195	1311
1176	188.632	187.190		0.16	0.16	1.32	1.04	0.36	84	84	73	2.77	1.5	77	0.041	103	103	73.3	-0.02	1.38	15.4799576	116.63	171.47	162.94	54.56	171.19	125	73	72	73	0.009	1.001	11.515	1345
1177	188.793	187.349		0.16	0.16	1.32	1.04	0.36	84	84	73	2.77	1.5	77	0.034	113	113	73.3	0.00	1.36	15.4522324	116.37	171.26	162.87	54.65	171.02	123	73	72	73	0.009	1.001	11.350	1322
1178	188.953	187.509		0.16	0.16	1.31	1.03	0.36	84	84	73	2.76	1.5	77	0.037	108	109	73.3	0.01	1.36	15.5298862	116.09	171.01	162.60	54.67	170.75	123	73	72	73	0.009	1.001	11.346	1319
1179	189.113	187.667		0.16	0.16	1.32	1.04	0.36	84	84	73	2.76	1.5	77	0.043	100	99	73.4	-0.12	1.28	15.4615726	115.82	170.63	162.27	54.58	170.40	120	73	72	73	0.008	1.001	10.705	1241
1180	189.273	187.826		0.16	0.16	1.31	1.04	0.36	84	84	73	2.77	1.5	77	0.043	100	100	73.8	-0.37	1.44	15.356101	115.84	170.65	161.88	54.58	170.42	119	73	73	73	0.008	1.001	12.002	1392
1181	189.433	187.986		0.16	0.16	1.32	1.04	0.36	84	84	73	2.76	1.5	76	0.043	100	101	72.9	0.87	1.40	15.4800253	115.52	170.30	162.03	54.53	170.05	120	73	73	73	0.008	1.001	11.680	1351
1182	189.593	188.144		0.16	0.16	1.32	1.04	0.36	84	84	73	2.77	1.5	76	0.045	98	97	73.4	-0.51	1.48	15.4659224	115.08	170.01	161.17	54.71	169.79	118	73	73	73	0.008	1.001	12.379	1426
1183	189.753	188.303		0.16	0.16	1.32	1.04	0.36	84	84	73	2.78	1.6	75	0.044	99	99	73.3	0.12	1.52	15.4586859	114.90	169.69	160.79	54.53	169.43	120	73	73	73	0.008	1.001	12.655	1456
1184	189.913	188.462		0.16	0.16	1.31	1.03	0.36	84	84	73	2.76	1.5	75	0.042	101	101	73.6	-0.33	1.46	15.4798622	114.77	169.55	160.59	54.52	169.28	119	73	73	73	0.009	1.001	12.183	1400
1185	190.073	188.621		0.16	0.16	1.31	1.04	0.36	84	84	73	2.78	1.6	75	0.045	98	98	73.3	0.36	1.47	15.546957	114.57	169.27	160.34	54.42	168.99	119	73	73	73	0.008	1.001	12.258	1406
1186	190.232	188.781		0.16	0.16	1.31	1.04	0.36	84	84	73	2.76	1.5	75	0.043	99	101	73.3	-0.02	1.38	15.4970388	114.49	169.04	161.15	54.28	168.77	117	73	73	73	0.008	1.001	11.494	1318
1187	190.392	188.939		0.16	0.16	1.31	1.04	0.36	84	84	73	2.77	1.6	75	0.042	101	100	73.3	0.02	1.45	15.4475946	114.32	168.99	160.01	54.41	168.73	117	73	73	73	0.009	1.001	12.105	1386
1188	190.553	189.098		0.16	0.16	1.31	1.04	0.36	84	84	73	2.76	1.6	75	0.042	102	101	73.3	-0.03	1.49	15.4052439	113.91	168.60	159.69	54.42	168.33	120	73	73	73	0.013	1.001	12.439	1419
1189	190.713	189.258		0.16	0.16	1.31	1.04	0.36	84	84	73	2.76	1.6	75	0.044	99	99	73.2	0.08	1.42	15.4614649	113.60	168.23	159.31	54.38	167.98	143	74	73	73	0.015	1.001	11.848	1348
1190	190.873	189.416		0.16	0.16	1.31	1.04	0.36	84	84	73	2.78	1.6	80	0.044	99	99	73.3	-0.04	1.49	15.4037294	113.43	168.03	159.14	54.34	167.77	138	73	72	73	0.013	1.001	12.389	1407
1191	191.034	189.575		0.16	0.16	1.31	1.04	0.36	84	84	73	2.77	1.5	75	0.043	101	100	73.2	0.03	1.44	15.4042768	113.18	167.88	158.97	54.39	167.57	135	73	73	73	0.012	1.001	12.012	1361
1192	191.194	189.734		0.16	0.16	1.32	1.04	0.36	84	85	73	2.76	1.6	75	0.046	97	96	72.9	0.29	1.49	15.4300957	113.09	167.69	158.81	54.31	167.40	131	73	73	73	0.011	1.001	12.447	1409
1193	191.355	189.893		0.16	0.16	1.31	1.04	0.36	84	85	73	2.76	1.5	74	0.044	99	99	72.7	0.20	1.44	15.4141064	112.75	167.37	158.58	54.40	167.15	130	73	73	73	0.011	1.001	12.010	1356
1194	191.515	190.052		0.16	0.16	1.32	1.04	0.36	84	85	73	2.77	1.5	75	0.042	101	101	73.1	-0.37	1.54	15.5467749	112.69	167.14	158.37	54.23	166.91	126	73	73	72	0.010	1.001	12.821	1447
1195	191.675	190.212		0.16	0.16	1.32	1.04	0.36	84	85	72	2.75	1.5	74	0.044	99	99	73.1	-0.02	1.46	15.4978838	112.61	167.04	158.22	54.12	166.73	126	73	73	73	0.010	1.001	12.168	1372
1196	191.835	190.370		0.16	0.16	1.32	1.04	0.36	84	85	73	2.75	1.5	74	0.046	97	96	73.0	0.08	1.42	15.4424477	112.38	166.72	157.96	54.08	166.46	124	73	72	73	0.009	1.001	11.848	1333
1197	191.996	190.530		0.16	0.16	1.31	1.04	0.36	84	85	73	2.76	1.5	74	0.044	99	99	72.9	0.11	1.44	15.4035854	111.81	166.41	157.73	54.32	166.13	122	73	72	72	0.009	1.001	12.015	1345
1198	192.156	190.689		0.16	0.16	1.31	1.04	0.36	84	85	72	2.77	1.5	74	0.044	99	99	73.1	-0.13	1.42	15.4727478	111.57	166.14	157.49	54.34	165.91	121	73	72	72	0.009	1.001	11.853	1324
1199	192.316	190.848		0.16	0.16	1.32	1.04	0.36	84	85	72	2.78	1.5	74	0.043	100	100	73.1	-0.03	1.50	15.4600763	111.39	165.95	157.27	54.28	165.68	120	73	72	72	0.009	1.001	12.497	1394
1200	192.476	191.008		0.16	0.16	1.31	1.04	0.36	84	85	72	2.77	1.6	74	0.043	100	100	72.9	0.21	1.48	15.4234476	111.29	165.73	157.06	54.15	165.45	119	73	72	72	0.009	1.001	12.347	1376
1201	192.636	191.166		0.16	0.16	1.31	1.04	0.36	84	85	72	2.75	1.5	74	0.042	101	100	73.1	-0.20	1.46	15.4522572	111.02	165.51	156.88	54.24	165.26	119	73	72	72	0.008	1.001	12.170	1353
1202	192.797	191.325		0.16	0.16	1.31	1.04	0.36	84	85	72	2.76	1.5	74	0.044	99	99	73.2	-0.09	1.48	15.5374994	110.82	165.22	156.52	54.12	164.93	117	72	72	72	0.008	1.001	12.331	1368
1203	192.957	191.485		0.16	0.16	1.31	1.04	0.36	84	85	72	2.76	1.5	74	0.044	99	99	72.9	0.32	1.54	15.4616966	110.57	165.02	156.35	54.16	164.73	116	72	72	72	0.008	1.001	12.829	1420
1204	193.117	191.644		0.16	0.16	1.31	1.04	0.36	84	85	72	2.76	1.5	74	0.045	98	97	72.8	0.10	1.46	15.4140301	110.19	164.76	156.12	54.28	164.46	115	72	72	72	0.008	1.001	12.183	1344
1205	193.277	191.803		0.16	0.16	1.32	1.05	0.36	84	85	72	2.76	1.5	74	0.042	101	101	73.0	-0.25	1.44	15.4418068	109.95	164.53	155.99	54.29	164.24	114	72	72	72	0.007	1.001	12.016	1323
1206	193.438	191.963		0.16	0.16	1.32	1.04	0.36	84	85	72	2.76	1.5	74	0.045	98	98	73.5	-0.52	1.50	15.3755941	109.79	164.23	155.62	54.15	163.94	114	72	72	72	0.007	1.001	12.506	1375
1207	193.598	192.121		0.16	0.16	1.32	1.04	0.36	84	85	72	2.76	1.5	74	0.044	99	98	73.5	0.06	1.46	15.5566607	109.75	164.05	155.45	53.98	163.73	113	72	72	72	0.007	1.001	12.182	1339
1208	193.758	192.281		0.16	0.16	1.32	1.04	0.36	84	85	72	2.76	1.5	74	0.043	100	100	72.5	0.99	1.52	15.474925	109.21	163.66	155.19	54.24	163.45	112	72	72	72	0.007	1.001	12.663	1384
1209	193.919	192.440		0.16	0.16	1.32	1.04	0.36	84	85	72	2.76	1.5	74	0.043	101	100	73.4	-0.90	1.48	15.4703636	109.09	163.61	155.06	54.20	163.29	112	72	72	72	0.006	1.001	12.349	1349
1210	194.079	192.599		0.16	0.16	1.32	1.04	0.36	84	85	72	2.76	1.5	74	0.043	100	100	72.9	0.45	1.52	15.4502831	108.86	163.33	154.77	54.20	163.07	113	72	72	72	0.006	1.001	12.657	1380
1211	194.240	192.759		0.16	0.16	1.32	1.04	0.36	84	85	72	2.77	1.5	74	0.044	99	99	72.8	0.14	1.44	15.4200602	108.63	162.99	154.91	54.15	162.77	110	72	72	72	0.006	1.001	12.013	1307
1212	194.400	192.917		0.16	0.16	1.32	1.04	0.36	84	85	72	2.77	1.5	74	0.044	99	98	73.1	-0.34	1.48	15.4617033	108.41	162.84	154.69	54.17	162.59	111	72	72	72	0.006	1.001	12.341	1340
1213	194.561	193.076		0.16	0.16	1.32	1.04	0.36	84	85	72	2.77	1.5	74	0.043	101	100	72.9	0.23	1.40	15.4136086	108.07	162.54	154.49	54.15	162.22	110	72	72	72	0.006	1.001	11.689	1265
1214	194.721	193.236		0.16	0.16	1.32	1.04	0.36	84	85	72	2.78	1.5	74	0.042	101	101	73.3	-0.36	1.58	15.5086517	107.81	162.33	153.44	54.19	162.00	109	72	72	72	0.006	1.001	13.144	1419
1215	194.881	193.395		0.16	0.16	1.31	1.04	0.36	84	85	72	2.78	1.6	74	0.042	101	101	72.9	0.32	1.52	15.4162388	107.60	162.02	153.11	54.08	161.69	108	72	72	72	0.006	1.001	12.659	1364
1216	195.042	193.554		0.16	0.16	1.32	1.04	0.36	84	85	72	2.76	1.5	74	0.043	101	100	73.1	-0.22	1.52	15.4922476	107.31	161.68	152.89	54.08	161.39	109	72	72	72	0.006	1.001	12.661	1360
1217	195.202	193.714		0.16	0.16	1.32	1.04	0.36	84	85	72	2.76	1.5	74	0.045	98	98	72.8	0.34	1.63	15.403204	106.91	161.38	152.32	54.16	161.07	107	72	72	72	0.006	1.001	13.630	1459
1218	195.362	193.872		0.16	0.16	1.32	1.04	0.36	84	84	72	2.77	1.5	74	0.044	99	98	73.1	-0.28	1.62	15.5852175	106.68	161.11	152.06	54.13	160.82	107	72	72	72	0.005	1.001	13.472	1439
1219	195.522	194.032		0.16	0.16	1.31	1.04	0.36	84	85	72	2.77	1.5	74	0.043	100	100	73.2	-0.07	1.60	15.47054	106.59	160.97	151.96	54.06	160.65	129	72	72	72	0.027	1.001	13.310	1421
1220	195.682	194.191		0.16	0.16	1.31	1.03	0.36	84	85	72	2.76	1.6	75	0.043	100	100	73.3	-0.09	1.54	15.4232922	106.38	160.56	151.54	53.92	160.30	138	72	72	72	0.010	1.001	12.823	1366
1221	195.842	194.350		0.16	0.16	1.31	1.04	0.36	84	85	72	2.76	1.6	78	0.044	99	99	72.9	0.32	1.54	15.4704809	106.07	160.37	151.45	54.02	160.09	141	72	72	72	0.026	1.001	12.824	1362
1222	196.001	194.510		0.16	0.16	1.31	1.03	0.36	84	84	72	2.78	1.6	79	0.044	99	100	73.0	-0.01	1.58	15.4997253	105.93	160.23	151.68	53.96	159.89	184	73	72	72	0.028	1.001	13.173	1397
1223	196.162	194.668		0.16	0.16	1.32	1.04	0.36	84	84	72	2.78	1.6	88	0.043	102	101	71.9	1.04	1.56	15.47966	105.62	159.87	151.23	53.97	159.59	213	73	72	72	0.031	1.001	12.995	1374
1224	196.321	194.826		0.16	0.16	1.32	1.05	0.36	84	84	72	2.77	1.6	92	0.040	105	105	70.7	1.22	1.56	15.4233551	105.68	160.05	151.04	53.99	159.68	235	73	73	72	0.030	1.001	12.985	1374
1225	196.481	194.986		0.16	0.16	1.33	1.05	0.36	84	84	72	2.77	1.6	96	0.043	102	103	69.4	1.29	1.60	15.463829	106.11	160.63	151.46	54.06	160.17	248	74	73	72	0.044	1.001	13.370	1420
1226	196.642	195.144		0.16	0.16	1.33	1.05	0.36	84	84	72	2.78	1.6	99	0.042	104	103	68.7	0.66	1.62	15.5188665	106.59	161.05	151.86	54.00	160.59	256	74	73	72	0.038	1.001	13.508	1442
1227	196.802	195.304		0.16	0.16	1.33	1.05	0.36	84	84	72	2.77	1.6	101	0.041	105	105	67.8	0.90	1.65	15.4702396	107.21	161.67	152.41	54.02	161.23	261	74	73	72	0.037	1.001	13.762	1477

Elapsed Time	Particulate Sampling Data																	Fuel Weight, lb		Flow, gpm		Temperature Data, oF									Stack			
	Gas Meter Cubic Feet (1)	Gas Meter Cubic Feet (2)	Gas Meter Cubic Feet (amb)	Sample Rate, cfm (1)	Sample Rate, cfm (2)	Orifice dH (1)	Orifice dH (2)	Orifice dH (amb)	Meter oF (1)	Meter oF (2)	Meter oF (amb)	Meter Vac. In. Hg. (1)	Meter Vac. In. Hg. (2)	Dilution Tunnel Temp.	Dilution Tunnel dP	Pro. Rate (%) (1)	Pro. Rate (%) (2)	Scale Reading	Weight Change	Load Side Liquid Flow Rate	Boiler Side Liquid Flow Rate (optional)	Thermopile ΔT	Boiler to Heat Exch. Temp.	Heat Exch to Boiler Temp.	Inlet Load Temp.	Outlet Load Temp.	Stack	Filter (1)	Filter (2)	Ambient		Specific Heat of Inlet Water (BTU/lb-°F)	Mass Flow Rate of Inlet Water (lb/min)	Heat Output, Btu
1228	196.962	195.462		0.16	0.16	1.32	1.05	0.36	84	84	72	2.78	1.6	103	0.040	106	106	66.9	0.94	1.56	15.4911661	107.90	162.44	153.19	54.10	162.00	265	75	74	72	0.039	1.001	13.007	1405
1229	197.121	195.620		0.16	0.16	1.32	1.05	0.36	84	84	72	2.77	1.6	104	0.038	109	108	66.6	0.26	1.58	15.4230509	108.71	163.14	153.84	54.00	162.71	269	75	74	72	0.042	1.001	13.209	1438
1230	197.281	195.780		0.16	0.16	1.33	1.05	0.36	84	84	72	2.79	1.6	105	0.038	109	110	65.1	1.56	1.54	15.4593534	109.37	163.80	154.37	53.98	163.35	273	75	74	72	0.045	1.001	12.869	1409
1231	197.441	195.938		0.16	0.16	1.32	1.05	0.36	84	84	72	2.79	1.6	106	0.041	105	105	64.7	0.38	1.55	15.4315062	110.29	164.76	155.21	54.00	164.29	275	76	74	72	0.042	1.001	12.955	1431
1232	197.600	196.096		0.16	0.16	1.32	1.04	0.36	84	84	72	2.79	1.6	107	0.041	105	105	63.5	1.17	1.58	15.5168953	111.11	165.56	155.99	54.00	165.10	277	76	74	72	0.044	1.001	13.161	1464
1233	197.759	196.255		0.16	0.16	1.32	1.04	0.36	84	84	72	2.78	1.6	108	0.044	101	102	63.0	0.57	1.58	15.4704809	112.13	166.55	156.90	53.93	166.06	279	76	75	72	0.042	1.001	13.146	1476
1234	197.919	196.413		0.16	0.16	1.32	1.05	0.36	84	84	72	2.78	1.6	109	0.042	104	104	62.1	0.85	1.52	15.4975348	113.01	167.51	157.82	54.03	167.04	283	77	75	72	0.049	1.001	12.677	1434
1235	198.078	196.572		0.16	0.16	1.32	1.04	0.36	84	84	72	2.79	1.6	110	0.040	106	107	61.1	0.99	1.64	15.4411354	114.05	168.49	158.64	53.99	168.04	284	77	75	72	0.040	1.001	13.632	1557
1236	198.237	196.730		0.16	0.16	1.32	1.04	0.36	84	84	72	2.79	1.6	111	0.041	105	105	60.6	0.57	1.52	15.4520836	114.91	169.55	159.51	54.07	168.98	287	77	75	72	0.046	1.001	12.669	1458
1237	198.397	196.888		0.16	0.16	1.32	1.04	0.36	84	84	72	2.79	1.6	111	0.041	106	105	59.1	1.47	1.52	15.4587851	116.26	170.76	161.08	54.00	170.26	289	77	75	72	0.051	1.001	12.653	1473
1238	198.556	197.046		0.16	0.16	1.32	1.03	0.36	84	84	72	2.79	1.6	112	0.041	105	105	58.3	0.79	1.52	15.4705334	117.32	171.86	162.20	54.06	171.38	291	78	76	72	0.047	1.001	12.663	1487
1239	198.716	197.204		0.16	0.16	1.32	1.04	0.36	84	84	72	2.8	1.6	113	0.041	106	105	57.4	0.89	1.48	15.4903193	118.52	173.16	163.39	54.15	172.67	293	78	76	72	0.045	1.001	12.330	1463
1240	198.875	197.362		0.16	0.16	1.32	1.04	0.36	84	84	72	2.79	1.6	114	0.041	105	105	56.6	0.80	1.54	15.5285053	119.74	174.42	164.47	54.16	173.90	296	78	76	72	0.051	1.001	12.816	1536
1241	199.034	197.519		0.16	0.16	1.32	1.03	0.36	84	84	72	2.8	1.6	114	0.042	104	103	55.3	1.34	1.52	15.4139223	121.03	175.80	165.71	54.20	175.23	298	78	77	72	0.050	1.001	12.649	1533
1242	199.193	197.677		0.16	0.16	1.32	1.04	0.36	84	84	72	2.8	1.6	116	0.044	102	102	54.2	1.03	1.52	15.4675741	122.40	177.17	167.06	54.23	176.63	300	79	77	72	0.049	1.001	12.649	1550
1243	199.352	197.835		0.16	0.16	1.31	1.03	0.36	84	84	72	2.8	1.6	117	0.040	107	107	53.8	0.43	1.42	15.441453	123.81	178.57	168.32	54.23	178.04	302	79	77	72	0.044	1.001	11.843	1468
1244	199.512	197.992		0.16	0.16	1.31	1.03	0.36	84	84	72	2.81	1.6	117	0.045	102	100	52.0	1.83	1.54	15.4416199	125.19	179.89	169.59	54.18	179.37	303	79	77	72	0.046	1.001	12.809	1606
1245	199.671	198.150		0.16	0.16	1.30	1.02	0.36	84	84	72	2.82	1.6	117	0.042	104	104	51.1	0.90	1.42	15.4697285	126.52	181.21	171.30	54.20	180.72	275	78	76	72	0.033	1.001	11.839	1500
1246	199.831	198.307		0.16	0.16	1.31	1.03	0.36	84	84	72	2.8	1.6	95	0.045	100	98	50.4	0.72	1.42	15.4482365	127.47	182.16	172.13	54.25	181.72	252	78	76	72	0.032	1.001	11.836	1511
1247	199.991	198.465		0.16	0.16	1.31	1.03	0.36	84	84	72	2.8	1.6	90	0.043	101	101	49.5	0.82	1.42	12.9359875	127.86	182.65	172.57	54.35	182.21	238	78	76	72	0.031	1.001	11.839	1516
1248	200.151	198.623		0.16	0.16	1.31	1.03	0.36	84	84	72	2.79	1.6	87	0.044	100	99	49.2	0.36	1.42	10.3220778	128.04	182.74	172.65	54.30	182.34	229	77	76	72	0.028	1.001	11.838	1518
1249	200.311	198.781		0.16	0.16	1.32	1.04	0.36	84	84	72	2.77	1.6	86	0.040	105	104	48.9	0.24	1.48	14.1783895	128.40	182.92	173.15	54.19	182.59	225	77	76	73	0.028	1.001	12.318	1584
1250	200.471	198.940		0.16	0.16	1.31	1.03	0.36	84	84	73	2.76	1.6	83	0.040	105	104	48.5	0.40	1.46	14.000165	128.29	183.02	173.44	54.40	182.68	221	77	76	73	0.029	1.001	12.161	1562
1251	200.631	199.098		0.16	0.16	1.31	1.04	0.36	84	84	73	2.76	1.6	81	0.043	101	100	48.3	0.26	1.42	12.848918	128.41	183.14	173.16	54.40	182.81	217	77	76	73	0.028	1.001	11.833	1521
1252	200.791	199.258		0.16	0.16	1.32	1.03	0.36	84	84	73	2.76	1.6	81	0.043	101	101	48.3	-0.01	1.48	11.8599091	128.47	183.10	173.16	54.31	182.78	213	77	76	73	0.027	1.001	12.321	1585
1253	200.951	199.416		0.16	0.16	1.31	1.03	0.36	84	84	73	2.76	1.6	81	0.044	99	99	47.9	0.35	1.46	14.7249317	128.59	183.14	173.18	54.22	182.81	210	76	76	73	0.028	1.001	12.147	1564
1254	201.111	199.574		0.16	0.16	1.32	1.04	0.36	84	84	73	2.76	1.6	80	0.043	101	100	48.2	-0.25	1.38	11.3361216	128.48	183.23	173.31	54.35	182.83	207	76	76	73	0.027	1.001	11.504	1480
1255	201.270	199.733		0.16	0.16	1.31	1.03	0.36	84	84	73	2.78	1.6	79	0.046	97	97	47.7	0.53	1.38	14.1204767	128.26	183.11	173.31	54.52	182.79	207	76	76	73	0.027	1.001	11.508	1478
1256	201.430	199.891		0.16	0.16	1.31	1.04	0.36	84	85	73	2.76	1.6	78	0.045	98	97	47.9	-0.25	1.46	11.2243414	128.31	183.05	173.23	54.40	182.71	206	76	76	73	0.028	1.001	12.151	1561
1257	201.590	200.051		0.16	0.16	1.31	1.04	0.36	84	85	73	2.77	1.6	77	0.041	103	103	47.5	0.42	1.32	9.06989002	128.17	183.01	173.33	54.49	182.65	204	76	75	73	0.029	1.001	11.024	1415
1258	201.750	200.209		0.16	0.16	1.31	1.03	0.36	84	85	73	2.77	1.6	77	0.043	100	99	47.6	-0.15	1.30	13.0203686	128.27	182.94	173.51	54.38	182.64	201	75	75	73	0.031	1.001	10.862	1395
1259	201.910	200.368		0.16	0.16	1.31	1.04	0.36	84	85	73	2.76	1.6	77	0.042	101	101	47.5	0.16	1.36	10.3956852	128.29	182.82	173.33	54.21	182.50	199	75	75	73	0.031	1.001	11.349	1458
1260	202.070	200.527		0.16	0.16	1.31	1.03	0.36	84	85	73	2.77	1.6	76	0.042	101	101	47.5	0.00	1.36	15.4779425	127.87	182.64	173.22	54.51	182.38	196	75	75	73	0.032	1.001	11.354	1454
1261	202.230	200.685		0.16	0.16	1.31	1.04	0.36	84	85	73	2.77	1.6	76	0.044	99	98	47.4	0.07	1.42	13.1313448	127.69	182.46	173.03	54.44	182.12	194	75	75	73	0.032	1.001	11.840	1514
1262	202.390	200.844		0.16	0.16	1.31	1.04	0.36	84	85	73	2.77	1.6	76	0.042	101	101	47.5	-0.07	1.44	14.1115732	127.81	182.38	172.93	54.27	182.08	191	75	75	73	0.031	1.001	11.999	1535
1263	202.550	201.003		0.16	0.16	1.31	1.03	0.36	84	85	73	2.78	1.6	76	0.044	99	99	47.3	0.13	1.36	9.02366352	127.45	182.23	172.78	54.45	181.91	189	75	75	73	0.031	1.001	11.362	1450
1264	202.711	201.162		0.16	0.16	1.31	1.04	0.36	84	85	73	2.77	1.6	76	0.044	100	99	47.6	-0.22	1.40	10.3247023	127.44	182.15	172.71	54.37	181.82	187	75	75	73	0.030	1.001	11.692	1492
1265	202.871	201.321		0.16	0.16	1.31	1.03	0.36	84	85	73	2.77	1.6	75	0.042	101	101	47.2	0.32	1.40	10.69872	127.29	181.97	172.63	54.39	181.68	185	75	75	73	0.031	1.001	11.684	1489
1266	203.031	201.479		0.16	0.16	1.32	1.04	0.36	84	85	73	2.77	1.6	76	0.043	100	99	47.3	-0.08	1.32	14.2635927	126.97	181.81	172.37	54.51	181.48	182	74	75	73	0.030	1.001	11.040	1403
1267	203.191	201.638		0.16	0.16	1.32	1.04	0.36	84	85	73	2.78	1.6	75	0.046	97	96	47.4	-0.09	1.32	14.1190577	127.06	181.70	172.35	54.32	181.38	180	74	74	73	0.029	1.001	11.037	1404
1268	203.351	201.798		0.16	0.16	1.32	1.04	0.36	84	85	73	2.78	1.6	75	0.041	102	103	47.4	0.00	1.38	15.4590559	126.87	181.62	172.18	54.37	181.24	178	74	74	73	0.029	1.001	11.531	1465
1269	203.512	201.956		0.16	0.16	1.32	1.04	0.36	84	85	73	2.79	1.6	75	0.043	101	99	47.1	0.28	1.36	15.4180689	126.75	181.48	172.10	54.40	181.16	176	74	74	73	0.028	1.001	11.362	1442
1270	203.671	202.115		0.16	0.16	1.32	1.04	0.36	84	85	73	2.78	1.6	75	0.043	99	100	47.2	-0.09	1.38	12.9330215	126.66	181.34	172.05	54.40	181.05	175	74	74	73	0.028	1.001	11.525	1462
1271	203.831	202.274		0.16	0.16	1.32	1.04	0.36	84	85	73	2.77	1.6	75	0.045	98	98	47.0	0.23	1.38	15.4317274	126.51	181.14	171.82	54.37	180.88	172	74	74	73	0.027	1.001	11.482	1454
1272	203.991	202.433		0.16	0.16	1.31	1.04	0.36	84	85	73	2.77	1.6	75	0.045	98	98	47.3	-0.34	1.38	12.8301907	126.37	181.02	171.70	54.36	180.73	171	74	74	73	0.026	1.001	11.536	1460
1273	204.151	202.593		0.16	0.16	1.31	1.04	0.36	85	85	73	2.78	1.6	75	0.044	99	99	47.2	0.11	1.42	12.9264536	126.19	180.91	171.60	54.42	180.61	169	74	74	73	0.026	1.001	11.837	1496
1274	204.311	202.751		0.16	0.16	1.31	1.04	0.36	84	85	73	2.78	1.6	75	0.045	98	97	46.5	0.70	1.40	14.1501436	126.17	180.77	171.54	54.35	180.52	166	74	74	72	0.025	1.001	11.683	1476
1275	204.471	202.910		0.16	0.16	1.32	1.04	0.36	84	85	72	2.79	1.6	75	0.045	98	98	45.9	0.60	1.39	15.2660141	126.08	180.62	171.49	54.24	180.32	165	73	74	73	0.024	1.001	11.552	1458
1276	204.632	203.069		0.16	0.16	1.31	1.04	0.36	84	85	73	2.78	1.6	75	0.044	100	99	46.5	-0.59	1.44	11.6514997	125.87	180.52	171.17	54.33	180.20	163	73	74	72	0.024	1.001	11.989	1511
1277	204.792	203.227		0.16	0.16	1.31	1.04	0.36	85	85	72	2.78	1.6	75	0.043	100	99	46.6	-0.13	1.36	10.9757595	125.75	180.29	171.09	54.27	180.01	161	73	73	72	0.024	1.001	11.365	1431
1278	204.952	203.386		0.16	0.16	1.32	1.04	0.36	85	85	72	2.78	1.6	75	0.043	100	100	46.5	0.17	1.41	14.3032007	125.42	180.02	170.79	54.37	179.79	160	73	73	72	0.022	1.001	11.720	1472
1279	205.112	203.546		0.16	0.16	1.32	1.04	0.36	85	85	72	2.79	1.6	74	0.043	100	100	46.4	0.02	1.42	14.1886873	125.35	180.01	170.82	54.37	179.72	158	73	73	72	0.022	1.001	11.839	1486
1280	205.273	203.704		0.16	0.16	1.32	1.04	0.36	85	85	72	2.77	1.6	74	0.043	100	99	46.4	0.03	1.35	11.944521	125.15	179.78	170.75	54.34	179.48	157	73	73	72	0.022	1.001	11.268	1412
1281	205.433	203.864		0.16	0.16	1.31	1.04	0.36	85	85	72	2.79	1.6	74	0.045	98	98	46.4	-0.03	1.31	14.2652178	125.01	179.66	170.65	54.39	179.40	156	73	73	72	0.021	1.001	10.898	1364
1282	205.593	204.022		0.16	0.16	1.32	1.04	0.36	85	85	72	2.78	1.6	74	0.042	101	100	46.4	0.05	1.36	11.5753183	124.93	179.46	170.45	54.25	179.18	155	73	73	72	0.021	1.001	11.370	1422
1283	205.753	204.181		0.16	0.16	1.32	1.04	0.36	85	85	72	2.78	1.6	74	0.045	98	97	46.3	0.07	1.34	12.8688288	124.70	179.38	170.30	54.27	178.97	153	73	73	72	0.021	1.001	11.186	1397
1284	205.913	204.341		0.16	0.16	1.32	1.04	0.36	85	85	72	2.78	1.6	74	0.043	100	100	46.4	-0.13	1.29	15.4023275	124.52	179.13	170.14	54.31	178.83	153	73	73	72	0.019	1.001	10.719	1336
1285	206.073	204.499		0.16	0.16	1.31	1.04	0.36	85	85	72	2.78	1.6	74	0.043	100	99	46.8	-0.37	1.34	15.4219284	124.34	178.94	169.96	54.31	178.65	151	73	73	72	0.020	1.001	11.208	1395
1286	206.233	204.658		0.16	0.16	1.31	1.04	0.36	85	85	72	2.79	1.6	74	0.046	96	96	46.6	0.22	1.29	14.1686945	124.02	178.77	170.32	54.44	178.46	151	73	73	72	0.019	1.001	10.721	1331
1287	206.393	204.817		0.16	0.16	1.32	1.04	0.36	85	85	72	2.79	1.6	74	0.044	99	99	47.0	-0.37	1.32	12.8692131	124.05	178.68	169.75	54.35	178.40	150	73	73	72	0.019	1.001	11.044	1372
1288	206.553	204.976		0.16	0.16	1.31	1.04	0.36	84	85	72	2.78	1.6	74	0.046	97	96	47.0	-0.03	1.36	15.4138565	123.65	178.33	169.41	54.43	178.08	148	73	73	72	0.018	1.001	11.371	1408
1289	206.713	205.135		0.16	0.16	1.31	1.04	0.36	85	85	72	2.78	1.6	74	0.046	96	96	46.1	0.85	1.26	14.079874	123.45	178.13	169.60	54.38	177.84	148	73	73	72	0.018	1.001	10.463	1293

Elapsed Time	Particulate Sampling Data																	Fuel Weight, lb		Flow, gpm		Temperature Data, oF								Stack			
	Gas Meter Cubic Feet (1)	Gas Meter Cubic Feet (2)	Gas Meter Cubic Feet (amb)	Sample Rate, cfm (1)	Sample Rate, cfm (2)	Orifice dH (1)	Orifice dH (2)	Orifice dH (amb)	Meter oF (1)	Meter oF (2)	Meter oF (amb)	Meter Vac. In. Hg. (1)	Meter Vac. In. Hg. (2)	Dilution Tunnel Temp.	Dilution Tunnel dP	Pro. Rate (%) (1)	Pro. Rate (%) (2)	Scale Reading	Weight Change	Load Side Liquid Flow Rate	Boiler Side Liquid Flow Rate (optional)	Thermopile ΔT	Boiler to Heat Exch. Temp.	Heat Exch to Boiler Temp.	Inlet Load Temp.	Outlet Load Temp.	Stack	Filter (1)	Filter (2)	Ambient		Specific Heat of Inlet Water (BTU/lb-°F)	Mass Flow Rate of Inlet Water (lb/min)	Heat Output, Btu
1290	206.873	205.294		0.16	0.16	1.31	1.03	0.36	85	85	72	2.78	1.6	74	0.046	96	96	46.7	-0.52	1.30	15.5077705	123.47	178.10	169.19	54.32	177.79	146	73	73	72	0.018	1.001	10.876	1344
1291	207.033	205.453		0.16	0.16	1.31	1.04	0.36	84	85	72	2.77	1.6	74	0.044	99	99	46.8	-0.10	1.36	15.5373478	123.13	177.86	168.94	54.41	177.54	144	73	73	72	0.017	1.001	11.360	1401
1292	207.194	205.613		0.16	0.16	1.32	1.04	0.36	85	85	72	2.77	1.6	74	0.047	96	96	46.5	0.31	1.29	15.4249077	123.02	177.64	168.83	54.35	177.37	145	72	73	72	0.017	1.001	10.714	1320
1293	207.354	205.771		0.16	0.16	1.32	1.04	0.36	85	85	72	2.77	1.6	74	0.044	99	98	46.7	-0.20	1.38	15.3323441	122.80	177.41	168.63	54.38	177.18	144	72	72	72	0.016	1.001	11.514	1416
1294	207.514	205.930		0.16	0.16	1.32	1.04	0.36	84	85	72	2.75	1.6	74	0.039	105	105	46.9	-0.21	1.27	15.4138927	122.61	177.28	168.54	54.41	177.02	144	72	72	72	0.016	1.001	10.556	1296
1295	207.674	206.090		0.16	0.16	1.32	1.04	0.36	84	85	72	2.77	1.6	74	0.045	98	98	46.7	0.17	1.36	14.9418297	122.37	177.02	168.28	54.43	176.80	142	72	72	72	0.016	1.001	11.355	1391
1296	207.835	206.248		0.16	0.16	1.32	1.04	0.36	84	85	72	2.75	1.6	74	0.042	102	100	46.5	0.20	1.38	15.3365898	122.25	176.93	168.15	54.39	176.64	140	72	72	72	0.016	1.001	11.490	1406
1297	207.995	206.407		0.16	0.16	1.32	1.04	0.36	84	85	72	2.75	1.6	74	0.039	105	105	46.4	0.06	1.32	15.5374317	122.10	176.70	167.93	54.34	176.44	139	72	72	72	0.015	1.001	11.036	1349
1298	208.156	206.567		0.16	0.16	1.32	1.04	0.36	84	85	72	2.76	1.6	74	0.045	98	98	46.3	0.17	1.32	15.4580412	121.94	176.50	167.72	54.30	176.23	139	72	72	72	0.015	1.001	11.036	1347
1299	208.316	206.725		0.16	0.16	1.32	1.04	0.36	84	85	72	2.76	1.6	74	0.042	101	100	46.4	-0.16	1.38	14.227951	121.63	176.38	167.61	54.46	176.08	138	72	72	72	0.014	1.001	11.520	1403
1300	208.476	206.885		0.16	0.16	1.32	1.04	0.36	84	85	72	2.74	1.6	74	0.042	101	101	46.7	-0.23	1.34	15.4522753	121.47	176.17	167.41	54.37	175.84	136	72	72	72	0.014	1.001	11.209	1363
1301	208.636	207.043		0.16	0.16	1.31	1.04	0.36	84	85	72	2.74	1.6	74	0.042	101	100	46.4	0.22	1.34	15.5666599	121.42	175.95	167.27	54.27	175.69	136	72	72	72	0.014	1.001	11.192	1361
1302	208.797	207.203		0.16	0.16	1.32	1.04	0.36	84	85	72	2.75	1.6	74	0.046	97	97	46.4	0.04	1.30	14.3249474	121.07	175.68	166.98	54.36	175.43	136	72	72	72	0.014	1.001	10.869	1318
1303	208.957	207.362		0.16	0.16	1.32	1.04	0.36	84	85	72	2.74	1.6	74	0.045	98	97	46.6	-0.20	1.38	15.4529848	120.82	175.51	166.83	54.40	175.22	133	72	72	72	0.013	1.001	11.524	1394
1304	209.117	207.521		0.16	0.16	1.32	1.04	0.36	84	85	72	2.75	1.6	74	0.045	98	97	46.9	-0.32	1.38	15.4615345	120.77	175.34	166.61	54.25	175.02	132	72	72	72	0.013	1.001	11.522	1393
1305	209.277	207.679		0.16	0.16	1.32	1.04	0.36	84	85	72	2.74	1.6	73	0.045	98	97	46.6	0.28	1.38	15.4416542	120.43	175.13	166.45	54.39	174.82	131	72	72	72	0.013	1.001	11.513	1388
1306	209.437	207.839		0.16	0.16	1.32	1.04	0.36	84	85	72	2.73	1.6	73	0.043	100	100	46.7	-0.03	1.36	15.4417372	120.25	174.87	166.20	54.34	174.59	130	72	72	72	0.012	1.001	11.358	1367
1307	209.597	207.998		0.16	0.16	1.32	1.04	0.36	84	85	72	2.74	1.6	73	0.046	97	96	46.9	-0.20	1.34	15.4231997	120.00	174.61	165.92	54.31	174.30	130	72	72	72	0.013	1.001	11.195	1345
1308	209.757	208.157		0.16	0.16	1.32	1.04	0.36	84	85	72	2.75	1.6	73	0.040	104	103	46.8	0.05	1.40	15.4322367	119.98	174.55	165.87	54.24	174.22	130	72	72	72	0.012	1.001	11.682	1403
1309	209.916	208.316		0.16	0.16	1.32	1.03	0.36	84	85	72	2.75	1.6	74	0.047	95	95	46.9	-0.05	1.38	15.336935	119.66	174.17	165.55	54.25	173.92	130	72	72	72	0.012	1.001	11.518	1380
1310	210.077	208.475		0.16	0.16	1.32	1.04	0.36	84	85	72	2.76	1.6	74	0.047	96	95	46.9	-0.06	1.38	15.3850317	119.43	174.00	165.46	54.37	173.80	127	72	72	72	0.012	1.001	11.524	1378
1311	210.237	208.635		0.16	0.16	1.32	1.04	0.36	84	85	72	2.75	1.6	74	0.044	99	99	47.0	-0.07	1.38	15.432394	119.26	173.80	165.47	54.26	173.51	127	72	72	72	0.011	1.001	11.516	1375
1312	210.397	208.793		0.16	0.16	1.32	1.04	0.36	84	85	72	2.76	1.6	74	0.043	100	99	47.0	0.06	1.36	15.4997635	118.95	173.55	165.02	54.38	173.33	126	72	72	72	0.011	1.001	11.357	1352
1313	210.557	208.952		0.16	0.16	1.32	1.04	0.36	84	85	72	2.76	1.6	73	0.046	97	96	46.9	0.02	1.34	15.5181475	118.87	173.41	164.79	54.24	173.12	125	72	72	72	0.011	1.001	11.193	1332
1314	210.718	209.112		0.16	0.16	1.32	1.04	0.36	84	85	72	2.75	1.6	73	0.043	101	100	46.9	-0.02	1.34	15.4781904	118.64	173.14	164.56	54.25	172.89	127	72	72	72	0.011	1.001	11.196	1330
1315	210.879	209.271		0.16	0.16	1.32	1.04	0.36	84	85	72	2.75	1.6	73	0.043	101	100	46.9	0.02	1.42	15.4338818	118.44	172.98	164.02	54.25	172.69	152	73	73	72	0.036	1.001	11.837	1404
1316	211.039	209.429		0.16	0.16	1.31	1.03	0.36	84	85	72	2.76	1.6	87	0.044	100	99	47.0	-0.08	1.44	15.4415455	118.16	172.60	163.72	54.21	172.38	153	72	72	72	0.018	1.001	12.005	1420
1317	211.199	209.588		0.16	0.16	1.32	1.04	0.36	84	85	72	2.75	1.6	75	0.046	97	96	46.8	0.24	1.36	15.4863596	117.84	172.42	164.01	54.26	172.10	147	72	72	72	0.016	1.001	11.362	1341
1318	211.360	209.747		0.16	0.16	1.33	1.05	0.36	84	85	72	2.75	1.5	74	0.043	101	100	46.5	0.25	1.42	15.4704094	117.76	172.28	163.36	54.28	172.04	142	72	72	72	0.015	1.001	11.846	1397
1319	211.520	209.907		0.16	0.16	1.32	1.04	0.36	84	85	72	2.75	1.5	73	0.045	98	98	47.0	-0.45	1.42	15.4705648	117.59	172.15	163.14	54.20	171.79	138	72	72	72	0.013	1.001	11.847	1395
1320	211.680	210.066		0.16	0.16	1.32	1.04	0.36	84	85	72	2.74	1.6	73	0.045	98	97	46.5	0.45	1.44	15.5179157	117.35	171.90	163.00	54.25	171.60	136	72	72	72	0.012	1.001	12.009	1411
1321	211.841	210.225		0.16	0.16	1.33	1.05	0.36	84	85	72	2.75	1.6	74	0.046	97	96	46.6	-0.06	1.36	15.5179605	117.28	171.62	163.19	54.03	171.31	134	72	72	72	0.012	1.001	11.357	1333
1322	212.001	210.385		0.16	0.16	1.32	1.05	0.36	84	85	72	2.74	1.6	74	0.043	100	100	46.7	-0.11	1.48	15.4702377	116.89	171.48	162.61	54.30	171.18	132	72	72	72	0.011	1.001	12.325	1442
1323	212.161	210.544		0.16	0.16	1.32	1.05	0.36	84	84	72	2.75	1.6	73	0.044	99	99	47.1	-0.36	1.48	15.4611158	116.72	171.17	162.32	54.17	170.88	131	72	72	72	0.011	1.001	12.322	1440
1324	212.321	210.703		0.16	0.16	1.32	1.04	0.36	84	85	72	2.74	1.5	73	0.043	100	100	46.8	0.26	1.46	15.4410706	116.71	171.16	162.21	54.05	170.77	128	72	72	72	0.011	1.001	12.160	1421
1325	212.482	210.863		0.16	0.16	1.31	1.04	0.36	84	84	72	2.74	1.5	74	0.044	99	99	46.4	0.40	1.40	15.5084715	116.22	170.72	161.85	54.22	170.44	126	72	72	72	0.010	1.001	11.681	1359
1326	212.642	211.021		0.16	0.16	1.32	1.04	0.36	84	84	72	2.74	1.6	73	0.041	102	102	46.6	-0.25	1.40	15.508503	115.93	170.49	162.24	54.26	170.19	126	72	72	72	0.010	1.001	11.679	1356
1327	212.802	211.181		0.16	0.16	1.32	1.04	0.36	84	84	72	2.75	1.6	73	0.045	98	98	46.7	-0.05	1.44	15.414506	115.71	170.24	161.43	54.26	169.97	125	72	72	72	0.010	1.001	12.005	1391
1328	212.963	211.341		0.16	0.16	1.32	1.04	0.36	84	84	72	2.74	1.5	74	0.046	97	97	46.6	0.05	1.38	15.4413815	115.68	169.96	161.24	54.01	169.69	123	72	72	72	0.009	1.001	11.519	1334
1329	213.123	211.499		0.16	0.16	1.32	1.04	0.36	84	84	72	2.75	1.6	73	0.044	99	98	46.5	0.11	1.42	15.4701614	115.37	169.81	161.06	54.16	169.54	124	72	72	72	0.009	1.001	11.849	1369
1330	213.284	211.659		0.16	0.16	1.32	1.05	0.36	84	84	72	2.75	1.6	73	0.044	99	99	47.1	-0.61	1.34	15.5182285	115.11	169.48	160.78	54.09	169.20	121	72	71	72	0.009	1.001	11.196	1290
1331	213.444	211.819		0.16	0.16	1.32	1.04	0.36	84	84	72	2.74	1.6	73	0.046	97	97	46.9	0.27	1.42	15.4902916	114.90	169.32	160.61	54.17	169.06	120	72	71	72	0.009	1.001	11.842	1362
1332	213.605	211.977		0.16	0.16	1.32	1.05	0.36	84	84	72	2.76	1.6	73	0.041	103	102	46.9	0.00	1.42	15.4798832	114.67	169.03	160.35	54.10	168.77	120	72	71	72	0.009	1.001	11.847	1360
1333	213.765	212.137		0.16	0.16	1.32	1.04	0.36	84	84	72	2.74	1.5	73	0.046	97	97	46.6	0.30	1.44	15.5374136	114.48	168.81	160.18	54.10	168.58	120	72	71	72	0.008	1.001	12.008	1376
1334	213.926	212.296		0.16	0.16	1.32	1.04	0.36	84	84	72	2.75	1.6	73	0.044	99	99	46.8	-0.27	1.41	15.5286474	114.42	168.60	159.96	53.97	168.39	119	72	71	72	0.008	1.001	11.724	1343
1335	214.087	212.455		0.16	0.16	1.32	1.05	0.36	84	84	72	2.76	1.6	73	0.041	103	102	46.9	-0.08	1.38	15.5286446	113.84	168.32	159.73	54.24	168.08	118	72	71	72	0.008	1.001	11.523	1313
1336	214.247	212.616		0.16	0.16	1.32	1.04	0.36	84	84	72	2.75	1.6	73	0.046	97	98	47.0	-0.08	1.46	15.4414511	113.74	168.10	159.38	54.11	167.85	118	71	71	72	0.008	1.001	12.170	1386
1337	214.408	212.774		0.16	0.16	1.32	1.05	0.36	84	84	72	2.74	1.6	73	0.045	98	97	46.8	0.16	1.38	15.4233055	113.47	167.97	159.18	54.16	167.63	118	71	71	72	0.008	1.001	11.523	1309
1338	214.568	212.934		0.16	0.16	1.31	1.05	0.36	84	84	72	2.74	1.6	73	0.046	97	97	46.9	-0.08	1.46	15.5085592	113.44	167.62	158.89	53.95	167.39	117	71	71	71	0.008	1.001	12.165	1382
1339	214.728	213.094		0.16	0.16	1.32	1.05	0.36	84	84	71	2.75	1.6	73	0.045	98	98	47.1	-0.17	1.42	15.4797611	112.94	167.39	158.68	54.16	167.10	116	71	71	71	0.008	1.001	11.839	1339
1340	214.889	213.252		0.16	0.16	1.32	1.05	0.36	84	84	71	2.76	1.6	73	0.045	98	97	46.8	0.30	1.40	15.4820147	112.91	167.16	158.46	53.95	166.86	117	71	71	71	0.007	1.001	11.679	1320
1341	215.049	213.411		0.16	0.16	1.32	1.05	0.36	84	84	71	2.74	1.6	73	0.042	101	101	46.8	-0.05	1.43	15.4235134	112.44	166.83	158.21	54.12	166.56	115	71	71	72	0.007	1.001	11.891	1339
1342	215.209	213.572		0.16	0.16	1.32	1.05	0.36	84	84	72	2.74	1.5	73	0.044	99	100	46.8	0.00	1.40	15.3849907	112.38	166.68	158.01	54.00	166.38	116	71	71	71	0.007	1.001	11.631	1309
1343	215.370	213.731		0.16	0.16	1.32	1.05	0.36	84	84	71	2.75	1.5	73	0.043	101	100	47.0	-0.13	1.46	15.5444555	112.14	166.51	157.78	54.05	166.19	114	71	71	71	0.007	1.001	12.148	1364
1344	215.530	213.890		0.16	0.16	1.32	1.04	0.36	84	84	71	2.74	1.6	73	0.043	100	100	47.2	-0.26	1.44	15.4462919	111.93	166.15	157.53	53.97	165.90	115	71	71	71	0.008	1.001	11.968	1341
1345	215.690	214.050		0.16	0.16	1.32	1.04	0.36	84	84	71	2.74	1.5	73	0.045	98	98	46.9	0.29	1.38	15.4416857	111.66	165.89	157.28	53.94	165.60	115	71	71	71	0.007	1.001	11.547	1291
1346	215.851	214.209		0.16	0.16	1.32	1.05	0.36	84	84	71	2.74	1.6	73	0.044	99	99	46.8	0.15	1.44	15.5466614	111.41	165.76	157.20	54.11	165.51	140	72	72	71	0.031	1.001	12.007	1339
1347	216.011	214.368		0.16	0.16	1.31	1.04	0.36	84	84	71	2.77	1.6	83	0.043	101	101	46.5	0.29	1.42	15.4031572	111.22	165.47	156.83	53.95	165.17	140	71	71	71	0.012	1.001	11.849	1319
1348	216.171	214.527		0.16	0.16	1.33	1.05	0.36	84	84	71	2.75	1.6	74	0.046	97	97	47.0	-0.56	1.42	15.5451088	110.85	165.20	156.66	54.08	164.93	133	71	71	71	0.011	1.001	11.845	1315
1349	216.332	214.686		0.16	0.16	1.32	1.05	0.36	84	84	71	2.75	1.6	73	0.043	101	100	47.0	0.02	1.55	15.5539856	110.77	165.06	156.34	53.99	164.76	129	71	71	71	0.010	1.001	12.940	1435
1350	216.492	214.847		0.16	0.16	1.33	1.05	0.36	84	84	71	2.74	1.5	73	0.043	100	101	46.9	0.12	1.52	15.4320269	110.45	164.82	155.90	54.06	164.50	126	71	71	71	0.009	1.001	12.640	1398
1351	216.653	215.005		0.16	0.16	1.32	1.05	0.36	84	84	71	2.74	1.5	73	0.042	102	100	47.0	-0.05	1.48	15.4800997	110.37	164.55	155.66	53.90	164.27	123	71	71	71	0.009	1.001	12.333	1363

Elapsed Time	Particulate Sampling Data																	Fuel Weight, lb		Flow, gpm		Temperature Data, oF								Stack			
	Gas Meter Cubic Feet (1)	Gas Meter Cubic Feet (2)	Gas Meter Cubic Feet (amb)	Sample Rate, cfm (1)	Sample Rate, cfm (2)	Orifice dH (1)	Orifice dH (2)	Orifice dH (amb)	Meter oF (1)	Meter oF (2)	Meter oF (amb)	Meter Vac. In. Hg. (1)	Meter Vac. In. Hg. (2)	Dilution Tunnel Temp.	Dilution Tunnel dP	Pro. Rate (%) (1)	Pro. Rate (%) (2)	Scale Reading	Weight Change	Load Side Liquid Flow Rate	Boiler Side Liquid Flow Rate (optional)	Thermopile ΔT	Boiler to Heat Exch. Temp.	Heat Exch to Boiler Temp.	Inlet Load Temp.	Outlet Load Temp.	Stack	Filter (1)	Filter (2)	Ambient		Specific Heat of Inlet Water (BTU/lb-°F)	Mass Flow Rate of Inlet Water (lb/min)	Heat Output, Btu
1352	216.813	215.165		0.16	0.16	1.32	1.04	0.36	84	84	71	2.74	1.6	73	0.045	98	98	47.1	-0.10	1.52	15.4903059	109.88	164.20	155.40	54.04	163.92	121	71	71	71	0.008	1.001	12.655	1392
1353	216.974	215.325		0.16	0.16	1.32	1.05	0.36	84	84	71	2.75	1.6	73	0.046	97	97	47.1	-0.08	1.42	15.5569696	109.83	164.11	155.23	53.95	163.78	120	71	71	71	0.008	1.001	11.844	1302
1354	217.135	215.484		0.16	0.16	1.32	1.05	0.36	84	84	71	2.75	1.6	73	0.043	101	100	47.0	0.14	1.38	15.4136515	109.57	163.70	154.93	53.85	163.42	118	71	71	71	0.008	1.001	11.528	1265
1355	217.295	215.643		0.16	0.16	1.32	1.05	0.36	84	84	71	2.75	1.5	72	0.042	101	101	46.6	0.43	1.48	15.479784	109.25	163.51	154.74	53.97	163.22	117	71	71	71	0.007	1.001	12.335	1349
1356	217.456	215.803		0.16	0.16	1.32	1.05	0.36	84	84	71	2.75	1.5	73	0.046	97	97	47.1	-0.52	1.50	15.4416227	109.01	163.30	154.54	53.99	162.99	116	71	71	71	0.007	1.001	12.489	1363
1357	217.617	215.962		0.16	0.16	1.33	1.05	0.36	84	84	71	2.74	1.6	73	0.044	99	99	46.9	0.19	1.48	15.5373859	108.77	162.96	154.32	53.93	162.71	116	71	71	71	0.007	1.001	12.335	1343
1358	217.777	216.121		0.16	0.16	1.33	1.05	0.36	84	84	71	2.75	1.6	73	0.045	98	98	47.2	-0.27	1.52	15.5501728	108.58	162.75	154.05	53.90	162.48	114	71	71	71	0.007	1.001	12.650	1375
1359	217.937	216.281		0.16	0.16	1.32	1.04	0.36	84	84	71	2.74	1.6	72	0.045	98	98	46.9	0.27	1.50	15.4588146	108.23	162.41	153.78	53.94	162.17	114	71	71	71	0.007	1.001	12.498	1354
1360	218.098	216.440		0.16	0.16	1.32	1.05	0.36	84	84	71	2.75	1.6	73	0.045	98	98	47.0	-0.07	1.44	15.428092	108.06	162.17	153.56	53.85	161.91	112	71	71	71	0.007	1.001	12.010	1299
1361	218.258	216.599		0.16	0.16	1.32	1.05	0.36	84	84	71	2.74	1.6	73	0.046	97	96	47.1	-0.10	1.60	15.5057602	108.02	161.99	153.38	53.74	161.75	111	71	71	71	0.006	1.001	13.304	1439
1362	218.419	216.759		0.16	0.16	1.32	1.05	0.36	84	84	71	2.74	1.5	73	0.044	99	99	47.0	0.10	1.50	15.4413004	107.49	161.82	153.18	54.00	161.49	111	71	71	71	0.006	1.001	12.492	1344
1363	218.579	216.918		0.16	0.16	1.32	1.04	0.36	84	84	71	2.74	1.6	73	0.045	98	98	46.9	0.09	1.48	15.4032221	107.18	161.50	152.88	54.02	161.20	110	71	71	71	0.006	1.001	12.332	1323
1364	218.739	217.078		0.16	0.16	1.32	1.05	0.36	84	84	71	2.75	1.6	73	0.041	102	103	47.1	-0.27	1.52	15.5373259	107.02	161.26	152.66	53.93	160.95	109	71	71	71	0.006	1.001	12.660	1357
1365	218.899	217.238		0.16	0.16	1.32	1.04	0.36	84	84	71	2.74	1.6	73	0.042	101	102	46.9	0.22	1.52	15.4690504	106.87	161.12	152.16	53.88	160.75	109	71	71	71	0.005	1.001	12.661	1355
1366	219.059	217.396		0.16	0.16	1.32	1.05	0.36	84	84	71	2.74	1.6	73	0.045	98	97	47.0	-0.04	1.50	15.4274788	106.45	160.74	151.89	54.00	160.45	121	71	71	71	0.018	1.001	12.501	1332
1367	219.219	217.557		0.16	0.16	1.31	1.04	0.36	84	84	71	2.76	1.6	74	0.042	101	102	47.0	0.00	1.62	15.4797993	106.15	160.45	151.27	53.96	160.11	161	72	71	71	0.027	1.001	13.468	1431
1368	219.379	217.715		0.16	0.16	1.32	1.04	0.36	84	84	71	2.75	1.6	84	0.044	100	99	46.5	0.44	1.60	15.4096966	105.89	160.06	150.85	53.85	159.74	189	72	71	71	0.027	1.001	13.302	1410
1369	219.539	217.874		0.16	0.16	1.33	1.05	0.36	84	84	71	2.74	1.6	87	0.041	104	103	46.2	0.37	1.52	15.4322519	105.70	159.95	150.70	53.87	159.58	215	72	71	71	0.034	1.001	12.658	1340
1370	219.700	218.034		0.16	0.16	1.33	1.05	0.36	84	84	71	2.75	1.6	91	0.041	105	105	45.4	0.81	1.60	15.4317856	105.91	160.13	150.90	53.85	159.77	237	72	72	71	0.035	1.001	13.309	1411
1371	219.859	218.192		0.16	0.16	1.34	1.05	0.36	84	84	71	2.75	1.6	96	0.045	99	99	44.2	1.15	1.61	15.401947	106.35	160.61	151.26	53.86	160.21	249	73	72	71	0.035	1.001	13.463	1434
1372	220.020	218.351		0.16	0.16	1.33	1.05	0.36	84	84	71	2.75	1.6	99	0.041	105	105	43.6	0.63	1.58	15.5088158	106.85	161.16	151.78	53.86	160.71	257	73	72	71	0.039	1.001	13.146	1406
1373	220.180	218.511		0.16	0.16	1.33	1.05	0.36	84	84	71	2.76	1.6	100	0.043	102	103	42.4	1.19	1.67	15.4350147	107.48	161.82	152.13	53.83	161.31	262	74	72	71	0.042	1.001	13.954	1502
1374	220.340	218.669		0.16	0.16	1.33	1.05	0.36	84	84	71	2.77	1.6	102	0.043	103	102	41.8	0.58	1.73	15.4775934	107.99	162.32	152.34	53.80	161.78	266	74	73	71	0.042	1.001	14.431	1560
1375	220.500	218.828		0.16	0.16	1.33	1.05	0.36	84	84	71	2.75	1.6	103	0.047	98	98	41.0	0.77	1.63	15.4522429	108.70	163.07	153.01	53.80	162.50	270	74	73	71	0.039	1.001	13.630	1483
1376	220.660	218.987		0.16	0.16	1.33	1.05	0.36	84	84	71	2.76	1.6	104	0.044	102	101	40.3	0.73	1.69	15.4135551	109.56	163.89	153.79	53.79	163.35	271	75	73	71	0.037	1.001	14.111	1548
1377	220.820	219.145		0.16	0.16	1.33	1.05	0.36	84	84	71	2.77	1.6	105	0.040	107	106	39.3	0.96	1.69	15.4616041	110.35	164.68	154.44	53.73	164.09	273	75	73	71	0.041	1.001	14.110	1559
1378	220.979	219.305		0.16	0.16	1.33	1.05	0.36	84	84	71	2.77	1.6	105	0.041	105	106	38.7	0.63	1.68	15.418355	111.15	165.48	155.22	53.76	164.91	275	75	73	71	0.040	1.001	14.023	1560
1379	221.138	219.463		0.16	0.16	1.33	1.04	0.36	84	84	71	2.77	1.6	106	0.044	101	101	37.6	1.10	1.70	15.5495329	112.05	166.37	156.06	53.76	165.80	278	75	74	71	0.041	1.001	14.209	1594
1380	221.298	219.621		0.16	0.16	1.33	1.05	0.36	84	84	71	2.77	1.6	107	0.044	102	101	37.5	0.15	1.67	15.4233932	113.14	167.45	156.90	53.73	166.87	280	76	74	71	0.044	1.001	13.959	1581
1381	221.457	219.780		0.16	0.16	1.32	1.04	0.36	84	84	71	2.78	1.6	108	0.045	100	101	36.3	1.16	1.69	15.3981943	114.17	168.44	157.91	53.71	167.88	282	76	74	71	0.040	1.001	14.080	1609
1382	221.617	219.938		0.16	0.16	1.33	1.05	0.36	84	84	71	2.77	1.6	108	0.043	103	102	35.5	0.80	1.64	15.5059605	115.18	169.51	158.79	53.73	168.91	283	76	74	71	0.045	1.001	13.673	1577
1383	221.776	220.097		0.16	0.16	1.32	1.04	0.36	84	84	71	2.78	1.6	109	0.043	103	103	34.8	0.74	1.60	15.4234324	116.33	170.65	159.78	53.69	170.02	285	77	74	71	0.045	1.001	13.304	1550
1384	221.936	220.254		0.16	0.16	1.32	1.04	0.36	84	84	71	2.79	1.6	109	0.041	106	104	33.9	0.91	1.65	15.3466921	117.60	171.96	160.96	53.71	171.32	287	77	75	70	0.043	1.001	13.787	1623
1385	222.096	220.412		0.16	0.16	1.32	1.05	0.36	84	84	70	2.78	1.6	110	0.042	105	104	33.0	0.87	1.71	15.3938408	118.81	173.19	162.02	53.72	172.53	289	77	75	70	0.045	1.001	14.265	1697
1386	222.255	220.571		0.16	0.16	1.33	1.04	0.36	84	84	70	2.8	1.6	111	0.045	100	101	32.1	0.87	1.69	15.4756393	119.92	174.25	163.08	53.71	173.64	292	77	75	70	0.046	1.001	14.101	1693
1387	222.414	220.728		0.16	0.16	1.32	1.04	0.36	84	84	70	2.79	1.6	112	0.043	103	102	31.1	1.04	1.63	15.5085211	121.23	175.67	164.26	53.73	174.96	294	77	75	71	0.044	1.001	13.629	1654
1388	222.574	220.887		0.16	0.16	1.33	1.04	0.36	84	84	71	2.79	1.6	112	0.041	106	106	30.2	0.92	1.69	15.4906435	122.50	176.87	165.39	53.71	176.21	296	78	75	71	0.043	1.001	14.103	1730
1389	222.733	221.044		0.16	0.16	1.32	1.04	0.36	84	84	71	2.78	1.6	112	0.044	102	101	29.1	1.09	1.67	15.4233847	123.66	178.01	166.35	53.71	177.36	298	78	76	71	0.048	1.001	13.946	1727
1390	222.892	221.202		0.16	0.16	1.32	1.04	0.36	84	84	71	2.79	1.6	113	0.044	102	102	27.9	1.21	1.73	15.4704876	125.08	179.39	167.64	53.68	178.76	299	78	76	71	0.045	1.001	14.431	1807
1391	223.052	221.359		0.16	0.16	1.32	1.03	0.36	84	84	71	2.79	1.6	113	0.044	102	101	27.1	0.78	1.67	15.4414444	126.33	180.67	168.83	53.72	180.05	301	78	76	71	0.043	1.001	13.955	1765
1392	223.211	221.517		0.16	0.16	1.31	1.03	0.36	84	84	71	2.81	1.6	114	0.043	103	103	26.1	1.02	1.65	15.3841486	127.62	182.00	170.03	53.71	181.33	292	78	76	71	0.036	1.001	13.788	1762
1393	223.371	221.675		0.16	0.16	1.32	1.03	0.36	84	84	71	2.79	1.6	102	0.043	103	102	25.4	0.69	1.58	15.500104	128.72	183.10	171.10	53.72	182.45	261	77	75	71	0.034	1.001	13.140	1693
1394	223.531	221.833		0.16	0.16	1.31	1.04	0.36	84	84	71	2.79	1.6	88	0.042	102	102	25.0	0.40	1.69	15.4518061	129.17	183.43	171.46	53.69	182.86	244	77	75	71	0.030	1.001	14.110	1825
1395	223.691	221.992		0.16	0.16	1.32	1.04	0.36	84	84	71	2.76	1.6	85	0.044	100	100	24.1	0.85	1.71	15.4535666	129.34	183.63	171.53	53.69	183.04	233	77	75	71	0.030	1.001	14.275	1849
1396	223.851	222.150		0.16	0.16	1.31	1.04	0.36	84	84	71	2.77	1.6	83	0.043	101	100	23.8	0.36	1.56	12.8479996	129.52	183.67	172.47	53.69	183.21	226	76	75	71	0.029	1.001	12.980	1683
1397	224.011	222.308		0.16	0.16	1.32	1.04	0.36	84	84	71	2.78	1.6	82	0.045	98	98	23.2	0.58	1.56	15.4318151	129.90	184.02	172.87	53.70	183.60	223	76	75	71	0.029	1.001	12.978	1688
1398	224.171	222.467		0.16	0.16	1.31	1.04	0.36	84	84	71	2.77	1.6	78	0.041	103	103	23.5	-0.37	1.54	12.9145746	129.92	184.10	172.93	53.72	183.64	219	76	75	70	0.029	1.001	12.816	1667
1399	224.331	222.625		0.16	0.16	1.31	1.04	0.36	84	84	70	2.76	1.6	77	0.042	101	101	23.0	0.52	1.48	13.0180702	130.00	184.10	173.33	53.70	183.70	215	75	74	70	0.029	1.001	12.326	1604
1400	224.490	222.784		0.16	0.16	1.32	1.04	0.36	84	84	70	2.76	1.6	76	0.042	101	101	22.9	0.13	1.54	14.20611	130.03	184.15	173.50	53.71	183.74	212	75	74	71	0.029	1.001	12.818	1669
1401	224.650	222.942		0.16	0.16	1.31	1.03	0.36	84	84	71	2.77	1.6	76	0.043	100	99	22.5	0.41	1.50	12.8973446	129.92	184.14	173.53	53.81	183.73	209	75	74	71	0.028	1.001	12.497	1626
1402	224.810	223.101		0.16	0.16	1.32	1.04	0.36	84	84	71	2.77	1.6	76	0.045	98	98	22.6	-0.13	1.46	15.4956779	129.84	184.06	173.39	53.81	183.65	207	75	74	70	0.027	1.001	12.166	1582
1403	224.970	223.259		0.16	0.16	1.32	1.04	0.36	84	84	70	2.77	1.6	75	0.046	97	96	22.5	0.16	1.44	13.9511032	129.79	184.01	173.38	53.81	183.60	206	74	74	71	0.027	1.001	12.002	1560
1404	225.130	223.418		0.16	0.16	1.32	1.04	0.36	84	84	71	2.77	1.6	74	0.044	99	99	22.4	0.01	1.50	11.7900887	129.59	183.91	173.32	53.90	183.49	205	74	74	70	0.029	1.001	12.494	1621
1405	225.290	223.577		0.16	0.16	1.31	1.04	0.36	84	84	70	2.75	1.6	74	0.041	102	102	22.1	0.37	1.46	11.6429558	129.46	183.72	173.17	53.90	183.36	203	74	74	71	0.030	1.001	12.171	1578
1406	225.449	223.735		0.16	0.16	1.31	1.03	0.36	84	84	71	2.77	1.6	74	0.046	96	96	22.1	-0.06	1.48	12.5407028	129.45	183.59	173.09	53.78	183.24	200	74	73	70	0.032	1.001	12.327	1598
1407	225.610	223.894		0.16	0.16	1.31	1.04	0.36	84	84	70	2.77	1.6	74	0.046	97	97	22.1	0.08	1.54	11.5693846	129.11	183.38	172.87	53.94	183.05	198	74	73	70	0.032	1.001	12.808	1656
1408	225.769	224.053		0.16	0.16	1.31	1.04	0.36	83	84	70	2.76	1.6	73	0.044	98	99	21.9	0.14	1.46	11.7383299	129.16	183.35	172.84	53.83	182.99	195	73	73	70	0.032	1.001	12.170	1574
1409	225.929	224.211		0.16	0.16	1.32	1.04	0.36	83	84	70	2.75	1.6	73	0.046	97	96	21.6	0.26	1.42	10.3722658	128.80	183.11	172.54	53.87	182.68	193	73	73	70	0.032	1.001	11.847	1528
1410	226.090	224.369		0.16	0.16	1.31	1.04	0.36	83	84	70	2.77	1.6	73	0.046	97	96	22.0	-0.35	1.45	12.9148626	128.83	183.09	172.58	53.90	182.73	190	73	73	70	0.031	1.001	12.055	1555
1411	226.250	224.529		0.16	0.16	1.32	1.03	0.36	83	84	70	2.75	1.6	73	0.047	96	96	22.1	-0.10	1.53	8.37378311	128.80	182.83	172.35	53.66	182.46	188	73	73	70	0.031	1.001	12.758	1645
1412	226.410	224.687		0.16	0.16	1.32	1.04	0.36	83	84	70	2.77	1.6	73	0.043	100	99	22.0	0.08	1.48	13.8174257	128.28	182.67	172.22	53.98	182.27	186	73	73	70	0.031	1.001	12.352	1586
1413	226.570	224.846		0.16	0.16	1.32	1.03	0.36	83	84	70	2.76	1.6	73	0.047	96	95	22.0	-0.02	1.48	14.7535963	128.32	182.61	172.05	53.86	182.18	184	73	73	70	0.030	1.001	12.333	1585

Elapsed Time	Particulate Sampling Data																Fuel Weight, lb		Flow, gpm		Temperature Data, oF								Stack			
	Gas Meter Cubic Feet (1)	Gas Meter Cubic Feet (2)	Gas Meter Cubic Feet (amb)	Sample Rate, cfm (1)	Sample Rate, cfm (2)	Orifice dH (1)	Orifice dH (2)	Orifice dH (amb)	Meter oF (1)	Meter oF (2)	Meter oF (amb)	Meter Vac. In. Hg. (1)	Meter Vac. In. Hg. (2)	Dilution Tunnel Temp.	Dilution Tunnel dP	Pro. Rate (%) (1)	Pro. Rate (%) (2)	Scale Reading	Weight Change	Load Side Liquid Flow Rate	Boiler Side Liquid Flow Rate (optional)	Thermopile ΔT	Boiler to Heat Exch. Temp.	Heat Exch to Boiler Temp.	Inlet Load Temp.	Outlet Load Temp.	Stack	Filter (1)	Filter (2)	Ambient		Specific Heat of Inlet Water (BTU/lb-°F)	Mass Flow Rate of Inlet Water (lb/min)	Heat Output, Btu
1414	226.731	225.004		0.16	0.16	1.32	1.04	0.36	83	84	70	2.77	1.6	73	0.045	98	97	21.7	0.33	1.48	15.4578524	128.09	182.34	171.89	53.90	181.99	182	73	72	70	0.029	1.001	12.335	1582
1415	226.891	225.163		0.16	0.16	1.31	1.04	0.36	83	84	70	2.76	1.6	73	0.046	97	96	21.6	0.06	1.53	14.0618773	128.01	182.19	171.86	53.84	181.85	179	72	72	70	0.029	1.001	12.734	1632
1416	227.051	225.322		0.16	0.16	1.31	1.04	0.36	83	84	70	2.75	1.6	73	0.045	98	98	21.7	-0.05	1.48	14.2163181	127.69	181.96	171.56	53.89	181.58	177	72	72	70	0.028	1.001	12.337	1577
1417	227.211	225.481		0.16	0.16	1.32	1.04	0.36	83	84	70	2.76	1.6	73	0.044	99	99	21.7	-0.05	1.48	12.8693228	127.70	181.90	171.53	53.83	181.53	176	72	72	70	0.028	1.001	12.333	1577
1418	227.371	225.639		0.16	0.16	1.32	1.04	0.36	83	84	70	2.77	1.6	73	0.041	102	102	21.5	0.30	1.48	14.3303881	127.42	181.69	171.26	53.90	181.33	174	72	72	70	0.027	1.001	12.338	1574
1419	227.532	225.799		0.16	0.16	1.32	1.04	0.36	83	84	70	2.76	1.6	73	0.041	103	103	22.0	-0.50	1.44	11.6433153	127.23	181.44	171.43	53.89	181.12	171	72	72	70	0.026	1.001	11.982	1526
1420	227.692	225.957		0.16	0.16	1.31	1.04	0.36	83	84	70	2.77	1.6	73	0.041	102	102	21.7	0.21	1.40	15.478878	127.23	181.36	171.36	53.80	181.03	170	72	72	70	0.026	1.001	11.687	1489
1421	227.852	226.117		0.16	0.16	1.32	1.04	0.36	83	84	70	2.76	1.6	73	0.043	100	100	21.7	0.02	1.42	12.9357529	127.08	181.30	171.28	53.86	180.94	169	72	72	70	0.025	1.001	11.844	1507
1422	228.012	226.274		0.16	0.16	1.31	1.04	0.36	83	84	70	2.76	1.6	73	0.046	97	95	21.6	0.14	1.40	14.225729	126.76	181.04	171.05	53.93	180.69	166	72	72	70	0.025	1.001	11.682	1483
1423	228.173	226.433		0.16	0.16	1.31	1.04	0.36	83	84	70	2.76	1.6	73	0.044	100	99	21.7	-0.13	1.42	14.2078476	126.71	180.96	170.93	53.87	180.58	164	72	72	70	0.024	1.001	11.845	1503
1424	228.332	226.592		0.16	0.16	1.32	1.04	0.36	83	84	70	2.76	1.6	73	0.044	98	99	21.6	0.12	1.50	15.430666	126.44	180.61	170.68	53.86	180.30	164	71	71	70	-0.075	1.001	12.494	1582
1425	228.493	226.751		0.16	0.16	1.32	1.04	0.36	83	84	70	2.77	1.6	73	0.046	97	96	21.6	-0.04	1.44	13.4362707	126.26	180.47	170.52	53.86	180.12	163	71	71	70	-0.029	1.001	12.008	1518
1426	228.653	226.910		0.16	0.16	1.31	1.04	0.36	83	84	70	2.76	1.6	72	0.045	98	97	21.2	0.42	1.42	12.9183283	126.03	180.25	170.40	53.91	179.94	160	71	71	70	-0.026	1.001	11.843	1494
1427	228.813	227.068		0.16	0.16	1.31	1.03	0.36	83	84	70	2.76	1.6	72	0.046	97	96	21.0	0.24	1.46	14.2755661	125.77	180.02	170.14	53.92	179.69	157	71	71	70	0.006	1.001	12.160	1531
1428	228.973	227.227		0.16	0.16	1.32	1.04	0.36	83	84	70	2.76	1.6	72	0.044	99	99	20.9	0.05	1.42	13.0657864	125.64	179.81	169.94	53.86	179.49	157	71	71	70	0.013	1.001	11.837	1489
1429	229.133	227.386		0.16	0.16	1.32	1.04	0.36	83	83	70	2.75	1.6	72	0.044	99	99	21.3	-0.40	1.44	12.9082727	125.50	179.74	169.86	53.88	179.38	156	71	71	70	-0.001	1.001	12.002	1508
1430	229.293	227.544		0.16	0.16	1.32	1.04	0.36	83	83	70	2.76	1.6	72	0.044	99	98	20.9	0.37	1.42	15.4137754	125.39	179.53	169.71	53.82	179.21	154	71	71	70	-0.030	1.001	11.844	1487
1431	229.453	227.703		0.16	0.16	1.31	1.04	0.36	83	83	70	2.77	1.6	72	0.044	99	99	21.1	-0.19	1.46	15.3793306	125.19	179.28	169.48	53.76	178.95	152	71	71	70	0.006	1.001	12.160	1524
1432	229.613	227.862		0.16	0.16	1.32	1.04	0.36	83	83	70	2.76	1.6	72	0.044	99	99	20.5	0.66	1.44	15.0883226	124.74	179.02	169.29	53.97	178.72	152	71	71	70	0.002	1.001	12.002	1499
1433	229.773	228.021		0.16	0.16	1.31	1.04	0.36	83	83	70	2.76	1.6	72	0.046	97	97	20.9	-0.47	1.46	15.441679	124.67	178.88	169.12	53.92	178.60	150	71	71	70	-0.001	1.001	12.163	1518
1434	229.933	228.180		0.16	0.16	1.31	1.04	0.36	83	83	70	2.75	1.6	72	0.044	99	99	20.6	0.29	1.48	15.5085249	124.46	178.72	168.96	53.93	178.39	148	71	71	70	0.003	1.001	12.322	1535
1435	230.093	228.338		0.16	0.16	1.31	1.04	0.36	83	83	70	2.76	1.6	72	0.045	98	97	20.9	-0.24	1.48	15.4615364	124.16	178.43	168.62	53.93	178.09	147	71	71	70	-0.001	1.001	12.328	1533
1436	230.253	228.497		0.16	0.16	1.31	1.04	0.36	83	83	70	2.76	1.6	72	0.045	98	98	20.9	-0.05	1.46	14.2479944	124.11	178.26	168.47	53.80	177.92	146	71	71	70	-0.011	1.001	12.169	1512
1437	230.413	228.657		0.16	0.16	1.32	1.04	0.36	83	83	70	2.75	1.6	72	0.045	98	98	21.2	-0.28	1.46	15.432106	123.82	178.00	168.30	53.85	177.67	145	71	71	70	-0.001	1.001	12.167	1508
1438	230.574	228.815		0.16	0.16	1.32	1.04	0.36	83	83	70	2.76	1.6	72	0.042	102	100	21.4	-0.20	1.40	15.4692888	123.47	177.71	167.93	53.89	177.36	143	71	71	70	-0.015	1.001	11.681	1444
1439	230.734	228.973		0.16	0.16	1.32	1.04	0.36	83	83	70	2.75	1.6	72	0.044	99	98	21.3	0.15	1.42	15.4413786	123.49	177.57	167.91	53.80	177.29	144	70	70	70	-0.003	1.001	11.843	1464
1440	230.894	229.133		0.16	0.16	1.32	1.04	0.36	83	83	70	2.75	1.6	72	0.044	99	99	21.2	0.08	1.50	15.5088902	123.20	177.37	167.77	53.89	177.09	142	70	70	70	-0.004	1.001	12.492	1541
1441	231.054	229.291		0.16	0.16	1.32	1.04	0.36	83	83	70	2.75	1.6	72	0.044	99	98	21.6	-0.46	1.46	15.4233685	122.98	177.27	167.54	53.95	176.92	141	70	70	70	0.009	1.001	12.160	1497
1442	231.215	229.451		0.16	0.16	1.32	1.04	0.36	83	83	70	2.75	1.6	72	0.046	97	97	21.2	0.40	1.42	15.5179949	122.70	177.00	167.32	53.95	176.64	140	70	70	70	0.010	1.001	11.841	1455
1443	231.375	229.609		0.16	0.16	1.32	1.04	0.36	83	83	70	2.75	1.6	72	0.042	101	100	21.2	-0.01	1.40	15.5085144	122.50	176.75	167.12	53.94	176.44	137	70	70	70	0.009	1.001	11.685	1433
1444	231.535	229.768		0.16	0.16	1.32	1.04	0.36	83	83	70	2.76	1.6	72	0.043	100	100	21.3	-0.05	1.44	15.4319191	122.16	176.36	166.76	53.91	176.07	136	70	70	70	-0.013	1.001	12.006	1468
1445	231.695	229.927		0.16	0.16	1.31	1.04	0.36	83	83	70	2.75	1.6	72	0.043	100	100	21.1	0.19	1.44	15.4850254	122.02	176.26	166.65	53.88	175.90	136	70	70	70	0.011	1.001	12.001	1466
1446	231.855	230.085		0.16	0.16	1.32	1.04	0.36	83	83	70	2.75	1.6	72	0.045	98	97	21.6	-0.52	1.40	15.5177441	121.86	176.01	166.46	53.82	175.68	136	70	70	70	-0.010	1.001	11.680	1425
1447	232.016	230.244		0.16	0.16	1.32	1.04	0.36	83	83	70	2.76	1.6	72	0.044	99	99	21.3	0.28	1.44	15.4614649	121.59	175.77	166.22	53.87	175.45	133	70	70	70	0.004	1.001	11.999	1461
1448	232.175	230.403		0.16	0.16	1.32	1.03	0.36	83	83	70	2.75	1.6	71	0.045	97	98	21.2	0.18	1.36	15.4033937	121.37	175.56	166.03	53.88	175.25	133	70	70	70	0.006	1.001	11.353	1380
1449	232.336	230.562		0.16	0.16	1.32	1.04	0.36	83	83	70	2.74	1.6	72	0.041	103	102	21.2	-0.05	1.40	15.5206852	121.19	175.31	165.84	53.81	175.01	132	70	70	70	0.002	1.001	11.679	1417
1450	232.495	230.721		0.16	0.16	1.32	1.04	0.36	83	83	70	2.75	1.6	72	0.041	102	102	21.5	-0.26	1.50	15.5073357	120.82	175.07	165.50	53.90	174.72	131	70	70	70	-0.005	1.001	12.487	1510
1451	232.655	230.879		0.16	0.16	1.32	1.04	0.36	83	83	70	2.76	1.6	71	0.043	100	99	21.2	0.30	1.39	15.4677839	120.64	174.84	165.39	53.85	174.50	133	70	70	70	0.001	1.001	11.581	1399
1452	232.815	231.038		0.16	0.16	1.32	1.04	0.36	83	83	70	2.76	1.6	72	0.043	100	100	21.6	-0.46	1.44	15.3862467	120.59	174.61	165.17	53.73	174.33	130	70	70	70	0.007	1.001	11.998	1449
1453	232.976	231.198		0.16	0.16	1.32	1.04	0.36	83	83	70	2.75	1.6	72	0.046	97	97	21.6	-0.02	1.46	15.5195789	120.25	174.42	164.96	53.84	174.09	130	70	70	70	0.003	1.001	12.177	1466
1454	233.136	231.356		0.16	0.16	1.31	1.04	0.36	83	83	70	2.75	1.6	72	0.042	101	100	21.4	0.28	1.42	15.5374699	119.89	174.13	164.68	53.94	173.83	130	70	70	70	0.001	1.001	11.836	1421
1455	233.296	231.515		0.16	0.16	1.32	1.04	0.36	83	83	70	2.74	1.6	72	0.046	97	97	21.6	-0.27	1.35	15.4234142	119.65	173.84	164.49	53.92	173.57	128	70	70	70	-0.001	1.001	11.296	1353
1456	233.456	231.674		0.16	0.16	1.33	1.04	0.36	83	83	70	2.74	1.6	71	0.043	100	100	21.2	0.42	1.44	15.5758581	119.42	173.61	164.23	53.90	173.31	127	70	70	70	-0.009	1.001	12.026	1438
1457	233.616	231.832		0.16	0.16	1.32	1.04	0.36	83	83	70	2.76	1.6	71	0.043	100	99	21.6	-0.41	1.42	15.4997816	119.19	173.47	163.95	53.86	173.04	126	70	70	70	0.002	1.001	11.836	1412
1458	233.777	231.992		0.16	0.16	1.32	1.04	0.36	83	83	70	2.74	1.6	71	0.046	97	97	21.5	0.18	1.44	15.4417486	119.07	173.14	163.84	53.80	172.88	125	70	70	70	-0.001	1.001	12.007	1431
1459	233.937	232.150		0.16	0.16	1.32	1.04	0.36	83	83	70	2.76	1.6	71	0.045	98	97	21.7	-0.24	1.44	15.4154253	118.80	172.96	163.59	53.84	172.65	126	70	70	69	0.004	1.001	12.030	1431
1460	234.097	232.309		0.16	0.16	1.32	1.04	0.36	83	83	69	2.74	1.6	71	0.045	98	98	21.1	0.57	1.48	15.5570688	118.58	172.78	163.39	53.85	172.43	126	70	70	70	0.004	1.001	12.320	1463
1461	234.257	232.469		0.16	0.16	1.33	1.04	0.36	83	83	70	2.74	1.6	71	0.045	98	98	21.7	-0.58	1.44	15.4799414	118.32	172.44	163.18	53.85	172.16	124	70	70	70	-0.004	1.001	11.998	1421
1462	234.418	232.627		0.16	0.16	1.33	1.04	0.36	83	83	70	2.74	1.6	71	0.045	98	97	21.6	0.10	1.50	15.4628553	118.14	172.24	162.96	53.78	171.92	125	70	70	70	-0.004	1.001	12.482	1476
1463	234.578	232.786		0.16	0.16	1.32	1.04	0.36	83	83	70	2.75	1.6	71	0.043	100	100	21.6	-0.02	1.42	15.4055252	117.77	172.02	162.71	53.90	171.68	153	71	71	70	-0.004	1.001	11.835	1396
1464	234.738	232.944		0.16	0.16	1.32	1.03	0.36	83	83	70	2.75	1.6	78	0.046	97	96	21.6	0.03	1.46	15.4546747	117.59	171.72	162.51	53.83	171.42	146	70	70	69	-0.002	1.001	12.160	1432
1465	234.899	233.103		0.16	0.16	1.32	1.05	0.36	83	83	69	2.73	1.6	72	0.044	99	99	21.8	-0.23	1.44	15.4521399	117.44	171.57	162.31	53.80	171.24	140	70	70	69	-0.002	1.001	12.008	1412
1466	235.059	233.263		0.16	0.16	1.32	1.05	0.36	83	83	69	2.74	1.6	71	0.041	102	103	21.6	0.21	1.42	15.5179634	117.13	171.25	162.05	53.83	170.96	136	70	70	70	-0.011	1.001	11.843	1389
1467	235.219	233.421		0.16	0.16	1.32	1.05	0.36	83	83	70	2.73	1.6	71	0.045	98	97	21.3	0.28	1.48	15.4231844	116.92	171.13	161.94	53.92	170.83	133	70	70	70	0.003	1.001	12.326	1443
1468	235.380	233.580		0.16	0.16	1.32	1.05	0.36	83	83	70	2.73	1.6	71	0.042	102	101	21.7	-0.39	1.46	15.4614716	116.61	170.83	161.57	53.87	170.48	130	70	70	69	-0.010	1.001	12.167	1421
1469	235.540	233.740		0.16	0.16	1.32	1.04	0.36	83	83	69	2.73	1.6	71	0.043	100	100	21.2	0.50	1.42	15.5758657	116.50	170.56	161.42	53.78	170.28	128	70	70	69	0.009	1.001	11.842	1381
1470	235.700	233.899		0.16	0.16	1.32	1.05	0.36	83	83	69	2.74	1.6	71	0.043	100	100	21.9	-0.70	1.50	15.5112457	116.36	170.32	161.22	53.73	170.09	127	70	70	69	0.007	1.001	12.482	1454
1471	235.861	234.058		0.16	0.16	1.32	1.05	0.36	83	83	69	2.74	1.6	71	0.043	100	100	21.6	0.34	1.44	15.5468988	115.94	170.02	160.92	53.82	169.76	123	70	70	69	0.006	1.001	12.000	1393
1472	236.022	234.218		0.16	0.16	1.33	1.04	0.36	83	83	69	2.74	1.6	71	0.041	103	103	21.4	0.13	1.44	15.3938046	115.77	169.94	160.81	53.82	169.58	123	70	70	69	-0.002	1.001	12.004	1391
1473	236.182	234.377		0.16	0.16	1.33	1.05	0.36	83	83	69	2.74	1.6	71	0.047	96	95	21.3	0.10	1.50	15.5433378	115.62	169.77	160.65	53.84	169.46	121	70	70	69	0.011	1.001	12.485	1445
1474	236.343	234.536		0.16	0.16	1.33	1.05	0.36	83	83	69	2.73	1.6	71	0.042	102	101	21.7	-0.39	1.44	15.5068464	115.29	169.41	160.35	53.79	169.07	121	70	70	70	0.006	1.001	12.000	1385
1475	236.503	234.695		0.16	0.16	1.33	1.04	0.36	83	83	70	2.73	1.6	71	0.046	97	96	21.5	0.21	1.46	15.4234409	115.14	169.16	160.12	53.73	168.87	119	70	70	69	-0.001	1.001	12.165	1402

Elapsed Time	Particulate Sampling Data																Fuel Weight, lb		Flow, gpm		Temperature Data, oF								Stack			
	Gas Meter Cubic Feet (1)	Gas Meter Cubic Feet (2)	Gas Meter Cubic Feet (amb)	Sample Rate, cfm (1)	Sample Rate, cfm (2)	Orifice dH (1)	Orifice dH (2)	Orifice dH (amb)	Meter oF (1)	Meter oF (2)	Meter oF (amb)	Meter Vac. In. Hg. (1)	Meter Vac. In. Hg. (2)	Dilution Tunnel Temp.	Dilution Tunnel dP	Pro. Rate (%) (1)	Pro. Rate (%) (2)	Scale Reading	Weight Change	Load Side Liquid Flow Rate	Boiler Side Liquid Flow Rate (optional)	Thermopile ΔT	Boiler to Heat Exch. Temp.	Heat Exch to Boiler Temp.	Inlet Load Temp.	Outlet Load Temp.	Stack	Filter (1)	Filter (2)	Ambient		Specific Heat of Inlet Water (BTU/lb-°F)	Mass Flow Rate of Inlet Water (lb/min)	Heat Output, Btu
1476	236.664	234.854		0.16	0.16	1.33	1.05	0.36	83	83	69	2.74	1.6	71	0.046	97	96	21.9	-0.44	1.52	15.5085163	114.62	168.84	159.77	53.88	168.50	118	70	70	69	-0.010	1.001	12.650	1452
1477	236.825	235.014		0.16	0.16	1.33	1.05	0.36	83	83	69	2.74	1.6	71	0.046	97	97	21.7	0.22	1.44	15.452117	114.49	168.67	159.65	53.83	168.32	118	70	70	69	0.005	1.001	12.007	1376
1478	236.986	235.173		0.16	0.16	1.33	1.05	0.36	83	83	69	2.73	1.6	71	0.043	100	100	21.7	0.00	1.44	15.5286808	114.35	168.49	159.46	53.81	168.16	116	70	70	69	-0.004	1.001	12.014	1375
1479	237.146	235.332		0.16	0.16	1.33	1.05	0.36	83	83	69	2.73	1.6	71	0.044	99	99	21.6	0.10	1.52	15.4796753	114.13	168.25	159.30	53.82	167.95	116	70	70	69	0.008	1.001	12.654	1446
1480	237.307	235.492		0.16	0.16	1.33	1.05	0.36	83	83	69	2.73	1.6	71	0.044	99	99	21.6	0.04	1.46	15.4417534	113.82	167.92	158.95	53.78	167.59	115	70	70	69	0.011	1.001	12.168	1387
1481	237.468	235.651		0.16	0.16	1.33	1.05	0.36	83	83	69	2.74	1.6	71	0.042	102	101	21.9	-0.33	1.44	15.5179491	113.54	167.68	158.71	53.84	167.37	114	70	70	69	0.005	1.001	12.005	1365
1482	237.628	235.810		0.16	0.16	1.33	1.05	0.36	83	83	69	2.73	1.6	71	0.046	97	96	21.6	0.35	1.40	15.3865261	113.30	167.38	158.46	53.78	167.08	113	70	69	69	-0.009	1.001	11.685	1326
1483	237.788	235.970		0.16	0.16	1.33	1.05	0.36	83	83	69	2.74	1.6	71	0.045	98	98	21.9	-0.39	1.36	15.4935884	113.10	167.22	158.41	53.86	166.96	113	70	70	69	-0.004	1.001	11.357	1286
1484	237.949	236.129		0.16	0.16	1.33	1.05	0.36	83	83	69	2.74	1.6	71	0.039	106	105	21.5	0.40	1.44	15.4702711	112.78	167.02	157.75	53.86	166.64	113	69	69	69	-0.017	1.001	12.009	1356
1485	238.116	236.288		0.17	0.16	1.33	1.05	0.36	83	83	69	2.74	1.6	71	0.043	104	100	21.9	-0.38	1.44	15.4902897	112.40	166.56	157.40	53.84	166.23	113	69	69	69	-0.008	1.001	12.008	1351
1486	238.271	236.448		0.15	0.16	1.33	1.05	0.36	83	83	69	2.73	1.6	71	0.042	98	102	21.9	0.02	1.50	15.4702444	112.38	166.46	157.31	53.75	166.13	113	69	69	69	0.003	1.001	12.493	1406
1487	238.431	236.606		0.16	0.16	1.33	1.05	0.36	83	83	69	2.73	1.6	71	0.045	98	97	21.6	0.32	1.46	15.4414129	111.97	166.13	157.02	53.84	165.82	112	69	69	69	0.010	1.001	12.168	1364
1488	238.592	236.766		0.16	0.16	1.33	1.05	0.36	83	83	69	2.74	1.6	71	0.046	97	97	21.5	0.04	1.54	15.4523067	111.72	165.85	156.75	53.80	165.52	113	69	69	69	0.008	1.001	12.836	1436
1489	238.752	236.925		0.16	0.16	1.33	1.04	0.36	83	83	69	2.73	1.6	71	0.041	102	102	21.7	-0.18	1.42	15.5949459	111.79	165.81	156.69	53.64	165.43	110	69	69	69	0.005	1.001	11.842	1325
1490	238.913	237.084		0.16	0.16	1.33	1.04	0.36	83	83	69	2.73	1.6	71	0.041	103	102	21.8	-0.09	1.51	15.5180197	111.28	165.42	156.28	53.78	165.06	111	69	69	69	-0.014	1.001	12.563	1400
1491	239.073	237.244		0.16	0.16	1.33	1.05	0.36	83	83	69	2.73	1.6	71	0.045	98	98	21.7	0.16	1.52	15.3650455	111.14	165.20	156.14	53.76	164.90	110	69	69	69	-0.015	1.001	12.657	1408
1492	239.233	237.403		0.16	0.16	1.33	1.05	0.36	83	83	69	2.74	1.6	71	0.045	98	98	21.9	-0.24	1.45	15.4321985	110.87	164.92	155.87	53.74	164.61	110	69	69	69	-0.016	1.001	12.083	1341
1493	239.393	237.562		0.16	0.16	1.33	1.04	0.36	83	83	69	2.74	1.6	71	0.043	100	100	21.9	-0.06	1.52	15.4521484	110.48	164.54	155.11	53.68	164.16	120	69	69	69	-0.008	1.001	12.679	1402
1494	239.541	237.722		0.15	0.16	1.33	1.04	0.36	83	83	69	2.73	1.6	71	0.044	91	99	21.8	0.12	1.54	15.429471	110.15	164.26	154.84	53.72	163.87	145	70	69	69	0.007	1.001	12.815	1413
1495	239.702	237.880		0.16	0.16	1.33	1.05	0.36	83	83	69	2.73	1.6	75	0.041	103	102	21.5	0.28	1.58	15.3465614	109.82	163.97	154.54	53.71	163.52	134	69	69	69	0.010	1.001	13.164	1447
1496	239.862	238.039		0.16	0.16	1.33	1.05	0.36	83	83	69	2.73	1.6	71	0.041	102	102	22.1	-0.50	1.56	15.4513264	109.78	163.79	154.42	53.62	163.40	128	69	69	69	0.012	1.001	12.972	1426
1497	240.023	238.199		0.16	0.16	1.33	1.05	0.36	83	83	69	2.74	1.6	71	0.045	98	98	21.9	0.13	1.54	15.3713369	109.51	163.65	154.31	53.73	163.24	124	69	69	69	0.002	1.001	12.834	1407
1498	240.183	238.358		0.16	0.16	1.33	1.05	0.36	83	83	69	2.74	1.6	71	0.038	106	106	21.9	0.03	1.58	15.461359	109.26	163.31	153.98	53.66	162.92	121	69	69	69	0.006	1.001	13.134	1437
1499	240.327	238.517		0.14	0.16	1.33	1.05	0.36	83	83	69	2.74	1.6	71	0.036	98	109	21.8	0.13	1.52	15.5010681	109.01	163.05	153.70	53.63	162.63	118	69	69	69	-0.001	1.001	12.649	1380
1500	240.454	238.676		0.13	0.16	1.33	1.04	0.36	83	83	69	2.74	1.6	70	0.043	79	100	22.0	-0.23	1.52	15.4033012	108.79	162.82	153.56	53.64	162.43	117	69	69	69	0.005	1.001	12.635	1376
1501	240.614	238.835		0.16	0.16	1.33	1.05	0.36	83	83	69	2.72	1.6	70	0.034	112	112	21.9	0.07	1.56	15.452013	108.55	162.55	153.58	53.59	162.15	115	69	69	69	0.006	1.001	12.998	1413
1502	240.711	238.995		0.10	0.16	1.33	1.05	0.36	83	83	69	2.73	1.6	70	0.043	60	100	21.8	0.10	1.63	15.4998674	108.22	162.25	152.65	53.64	161.86	114	69	69	69	-0.004	1.001	13.595	1473
1503	240.823	239.154		0.11	0.16	1.33	1.05	0.36	83	83	69	2.74	1.6	70	0.048	66	94	21.9	-0.03	1.67	15.3662233	107.98	161.97	152.40	53.61	161.59	113	69	69	69	-0.016	1.001	13.942	1507
1504	240.928	239.313		0.10	0.16	1.34	1.05	0.36	83	83	69	2.73	1.6	70	0.044	65	99	21.6	0.28	1.59	15.4794273	107.72	161.68	152.07	53.54	161.26	112	69	69	69	-0.002	1.001	13.298	1434
1505	241.043	239.473		0.12	0.16	1.33	1.04	0.36	83	83	69	2.73	1.6	71	0.039	75	105	22.1	-0.54	1.67	15.3758011	107.37	161.48	151.79	53.63	161.00	111	69	69	69	0.001	1.001	13.943	1499
1506	241.180	239.631		0.14	0.16	1.32	1.05	0.36	83	83	69	2.74	1.6	70	0.046	83	96	22.0	0.13	1.65	15.460597	107.01	161.05	151.47	53.59	160.61	110	69	69	69	-0.008	1.001	13.790	1477
1507	241.301	239.790		0.12	0.16	1.33	1.05	0.36	83	83	69	2.73	1.6	70	0.045	74	97	22.1	-0.09	1.63	15.5086222	106.89	160.93	151.35	53.58	160.47	109	69	69	69	-0.007	1.001	13.625	1458
1508	241.458	239.950		0.16	0.16	1.33	1.05	0.36	83	83	69	2.72	1.6	70	0.045	96	98	22.0	0.04	1.58	15.5757484	106.61	160.57	151.08	53.52	160.12	117	69	69	69	0.006	1.001	13.140	1402
1509	241.618	240.109		0.16	0.16	1.33	1.05	0.36	83	83	69	2.73	1.6	71	0.043	100	100	21.8	0.22	1.60	15.4212847	106.32	160.27	150.84	53.52	159.84	160	70	69	69	0.005	1.001	13.303	1416
1510	241.778	240.268		0.16	0.16	1.32	1.05	0.36	83	83	69	2.75	1.6	81	0.043	101	101	21.6	0.22	1.63	15.4139261	106.05	160.02	150.57	53.51	159.56	185	70	70	69	-0.017	1.001	13.626	1447
1511	241.938	240.427		0.16	0.16	1.33	1.05	0.36	83	83	69	2.73	1.6	85	0.043	101	101	21.4	0.20	1.60	15.5248184	106.00	159.96	150.55	53.50	159.50	210	70	70	69	-0.004	1.001	13.305	1412
1512	242.098	240.586		0.16	0.16	1.33	1.05	0.36	82	83	69	2.73	1.6	88	0.044	100	100	19.7	1.75	1.67	15.4705105	105.76	159.91	149.76	53.54	159.30	233	71	70	69	-0.017	1.001	13.947	1477
1513	242.219	240.745		0.12	0.16	1.34	1.05	0.36	82	83	69	2.75	1.6	93	0.039	81	107	18.5	1.12	1.71	15.5178957	106.05	160.10	149.81	53.50	159.55	246	71	70	69	-0.009	1.001	14.270	1515
1514	242.379	240.904		0.16	0.16	1.34	1.05	0.36	82	83	69	2.75	1.6	96	0.045	100	100	18.1	0.43	1.67	15.4797163	106.57	160.64	150.27	53.49	160.07	253	72	71	69	-0.007	1.001	13.946	1488
1515	242.539	241.063		0.16	0.16	1.34	1.06	0.36	83	83	69	2.75	1.6	98	0.040	106	106	18.3	-0.23	1.73	15.5181818	107.11	161.20	150.79	53.47	160.58	258	72	71	69	-0.015	1.001	14.439	1548
1516	242.700	241.222		0.16	0.16	1.34	1.05	0.36	83	83	69	2.75	1.6	99	0.042	104	104	17.5	0.78	1.65	15.4240294	107.81	161.84	151.31	53.42	161.23	262	72	71	69	-0.005	1.001	13.787	1488
1517	242.860	241.380		0.16	0.16	1.34	1.05	0.36	82	83	69	2.74	1.6	100	0.043	103	102	16.8	0.79	1.71	15.5374603	108.35	162.42	151.86	53.43	161.78	266	72	71	69	0.001	1.001	14.271	1548
1518	243.020	241.539		0.16	0.16	1.34	1.05	0.36	82	83	69	2.74	1.6	101	0.045	101	100	15.5	1.25	1.71	15.5035858	108.94	163.06	152.36	53.44	162.38	269	73	71	69	0.006	1.001	14.268	1556
1519	243.179	241.698		0.16	0.16	1.34	1.05	0.36	82	83	69	2.74	1.6	102	0.040	106	106	14.5	1.03	1.69	15.461731	109.87	163.98	153.24	53.42	163.30	271	73	72	69	-0.013	1.001	14.104	1552
1520	243.338	241.856		0.16	0.16	1.34	1.05	0.36	82	83	69	2.74	1.6	103	0.040	106	106	14.0	0.50	1.69	15.5248833	110.57	164.67	153.84	53.41	163.99	273	73	72	69	0.002	1.001	14.105	1562
1521	243.498	242.015		0.16	0.16	1.34	1.05	0.36	82	83	69	2.76	1.6	103	0.041	106	105	13.4	0.55	1.69	15.5285883	111.47	165.55	154.67	53.40	164.87	276	74	72	69	-0.003	1.001	14.106	1574
1522	243.658	242.173		0.16	0.16	1.33	1.05	0.36	82	83	69	2.76	1.6	104	0.046	100	99	12.7	0.76	1.67	15.4868851	112.44	166.49	155.61	53.40	165.84	278	74	72	69	-0.010	1.001	13.948	1570
1523	243.735	242.331		0.08	0.16	1.33	1.05	0.36	82	83	69	2.75	1.6	105	0.044	49	101	11.7	0.98	1.69	15.435605	113.44	167.42	156.55	53.37	166.82	280	74	72	69	-0.007	1.001	14.107	1602
1524	243.767	242.490		0.03	0.16	1.33	1.05	0.36	82	83	69	2.77	1.6	106	0.040	21	107	11.5	0.19	1.79	15.4905443	114.48	168.54	157.47	53.38	167.86	281	74	73	69	-0.011	1.001	14.887	1706
1525	243.773	242.648		0.01	0.16	1.33	1.05	0.36	82	83	69	2.77	1.6	106	0.047	4	98	10.6	0.90	1.73	15.4319906	115.64	169.74	158.57	53.39	169.03	282	74	73	69	-0.004	1.001	14.430	1671
1526	243.919	242.807		0.15	0.16	1.33	1.04	0.36	82	83	69	2.76	1.6	106	0.045	92	101	9.4	1.17	1.73	15.5374765	116.73	170.86	159.63	53.38	170.10	283	75	73	69	-0.004	1.001	14.429	1686
1527	244.080	242.964		0.16	0.16	1.33	1.05	0.36	82	83	69	2.77	1.6	106	0.045	102	99	9.4	0.04	1.75	15.5163069	118.02	172.16	160.61	53.38	171.39	284	75	73	69	-0.010	1.001	14.564	1721
1528	244.239	243.122		0.16	0.16	1.33	1.04	0.36	82	83	69	2.78	1.6	107	0.043	103	102	8.0	1.41	1.69	15.4997864	119.25	173.38	161.65	53.40	172.65	285	75	73	69	-0.014	1.001	14.122	1686
1529	244.398	243.281		0.16	0.16	1.33	1.04	0.36	82	83	69	2.77	1.6	107	0.043	103	103	7.7	0.25	1.74	15.4704094	120.30	174.46	162.57	53.40	173.70	287	75	73	69	-0.015	1.001	14.479	1744
1530	244.558	243.438		0.16	0.16	1.33	1.04	0.36	82	83	69	2.77	1.6	107	0.043	103	102	6.8	0.98	1.69	15.5009937	121.35	175.53	163.64	53.40	174.75	288	75	73	69	0.000	1.001	14.117	1715
1531	244.718	243.597		0.16	0.16	1.33	1.04	0.36	82	82	69	2.78	1.6	108	0.045	101	101	6.4	0.39	1.70	15.5461683	122.58	176.74	164.77	53.40	175.98	290	75	73	69	-0.007	1.001	14.175	1740
1532	244.877	243.754		0.16	0.16	1.33	1.04	0.36	82	83	69	2.79	1.6	108	0.040	107	106	5.1	1.28	1.73	15.4613953	123.89	178.04	166.03	53.38	177.27	291	76	74	69	-0.005	1.001	14.435	1791
1533	245.036	243.912		0.16	0.16	1.33	1.04	0.36	82	83	69	2.79	1.6	108	0.045	101	100	4.2	0.90	1.75	15.4703779	124.94	179.08	166.96	53.37	178.31	292	76	74	69	-0.013	1.001	14.593	1826
1534	245.195	244.070		0.16	0.16	1.32	1.04	0.36	82	82	69	2.77	1.6	109	0.044	102	102	3.8	0.41	1.69	15.4414806	126.13	180.37	168.10	53.40	179.53	293	76	74	69	-0.009	1.001	14.113	1782
1535	245.354	244.227		0.16	0.16	1.32	1.04	0.36	82	83	69	2.78	1.6	109	0.045	101	100	3.1	0.66	1.71	15.0411043	127.37	181.57	169.28	53.40	180.77	294	76	74	69	0.001	1.001	14.278	1821
1536	245.514	244.385		0.16	0.16	1.32	1.04	0.36	82	82	69	2.79	1.6	109	0.044	102	102	2.4	0.70	1.73	15.4902878	128.60	182.78	170.29	53.40	182.00	294	76	74	69	0.008	1.001	14.437	1859
1537	245.674	244.542		0.16	0.16	1.32	1.04	0.36	82	82	69	2.8	1.6	109	0.043	104	102	1.2	1.18	1.77	14.0928612	129.79	183.93	171.30	53.37	183.16	297	76	74	69	-0.031	1.001	14.755	1917

Elapsed Time	Particulate Sampling Data																Fuel Weight, lb		Flow, gpm		Temperature Data, oF								Stack			
	Gas Meter Cubic Feet (1)	Gas Meter Cubic Feet (2)	Gas Meter Cubic Feet (amb)	Sample Rate, cfm (1)	Sample Rate, cfm (2)	Orifice dH (1)	Orifice dH (2)	Orifice dH (amb)	Meter oF (1)	Meter oF (2)	Meter oF (amb)	Meter Vac. In. Hg. (1)	Meter Vac. In. Hg. (2)	Dilution Tunnel Temp.	Dilution Tunnel dP	Pro. Rate (%) (1)	Pro. Rate (%) (2)	Scale Reading	Weight Change	Load Side Liquid Flow Rate	Boiler Side Liquid Flow Rate (optional)	Thermopile ΔT	Boiler to Heat Exch. Temp.	Heat Exch to Boiler Temp.	Inlet Load Temp.	Outlet Load Temp.	Stack	Filter (1)	Filter (2)	Ambient		Specific Heat of Inlet Water (BTU/lb-°F)	Mass Flow Rate of Inlet Water (lb/min)	Heat Output, Btu
1538	245.834	244.700	477.49	0.16	0.16	1.32	1.04	0.36	82	82	69	2.81	1.6	110	0.046	100	99	0.0	1.23	1.73	14.344718	130.92	185.08	172.35	53.36	184.28	285	76	74	69	0.007	1.001	14.434	1892
	245.834	244.700	477.490			1.31	1.04	0.36	83	83	70			81	0.044					1.46	14.63	119.0	173.4	164.1	54.1	173.1		72.52	72.03		0.02			1448
																																TOTAL:	2226553

TF_{avg}	178.717
TI_{avg}	157.208

Hydronic Heating Appliances - Test Method ASTM 2618
Results

Manufacturer: Central Boiler - WoodMaster
Model: Edge 960 - CleanFire 900
Tracking No.: 2430
Project No.: 0117WB041E
Run #: 4
Date: 12/21/20

Equipment Numbers:

TRAIN 1 (First Hour emissions)

Sample Component	Reagent	Filter, Probe or Dish #	Weights		
			Final, mg	Tare, mg	Particulate, mg
B. Front filter catch	Filter	E155	120.2	120.0	0.2
C. Rear filter catch	Filter	E156	117.1	119.1	-2.0
D. Probe catch*	Probe	56	118614.2	118613.3	0.9
E. Filter seals catch*	Seals	S054	3352.1	3350.1	2.0

Sub-Total	Total Particulate, mg:	1.1

TRAIN 1 (Post First Hour Change-out)

Sample Component	Reagent	Filter, Probe or Dish #	Weights		
			Final, mg	Tare, mg	Particulate, mg
B. Front filter catch	Filter	E153	125.9	118.9	7.0
C. Rear filter catch	Filter	E154	119.3	119.1	0.2
D. Probe catch*	Probe	37	114467.8	114465.5	2.3
E. Filter seals catch*	Seals	S053	3312.1	3310.9	1.2

Sub-Total	Total Particulate, mg:	10.7

Train 1 Aggregate	Total Particulate, mg:	11.8

TRAIN 2

Sample Component	Reagent	Filter, Probe or Dish #	Weights		
			Final, mg	Tare, mg	Particulate, mg
A. Front filter catch	Filter	E157	125.7	118.7	7.0
B. Rear filter catch	Filter	E158	120.1	119.3	0.8
C. Probe catch*	Probe	58	117069.2	117066.6	2.6
D. Filter seals catch*	Seals	S055	3508.7	3507.3	1.4

Total Particulate, mg:	11.8

AMBIENT

Sample Component	Reagent	Filter # or Probe #	Weights		
			Final, mg	Tare, mg	Particulate, mg
A. Front filter catch*	Filter	E159	119.0	118.5	0.5

Total Particulate, mg:	0.5

*Particulate catch that results in a negative number, is assumed to be zero for probes and seals, negative numbers for filters are assumed to be part of the seal weight.

Component	Equations:
A. Front filter catch	Final (mg) - Tare (mg) = Particulate, mg
B. Rear filter catch	Final (mg) - Tare (mg) = Particulate, mg
C. Probe catch	Final (mg) - Tare (mg) = Particulate, mg

OMNI-Test Laboratories, Inc.

Manufacturer: Central Boiler, WoodMaster
Model: Edge 960, CleanFire 900
Date: 12/21/20
Run: 4
Control #: 0117WB041E
Test Duration: 1538
Output Category: II

Technicians: B. Davis

Test Results in Accordance with CSA B415.1-09

	HHV Basis	LHV Basis
Overall Efficiency	87.1%	93.2%
Combustion Efficiency	95.1%	95.1%
Heat Transfer Efficiency	92%	97.9%

Output Rate (kJ/h)	98,174	93,129	**(Btu/h)**
Burn Rate (kg/h)	5.64	12.43	**(lb/h)**
Input (kJ/h)	112,683	106,892	**(Btu/h)**

Test Load Weight (dry kg)	144.62	318.74	**dry lb**
MC wet (%)	17.83		
MC dry (%)	21.70		
Particulate (g)	51.19		
CO (g)	3,816		
Test Duration (h)	25.63		

Emissions	**Particulate**	**CO**
g/MJ Output	N/A	1.52
g/kg Dry Fuel	N/A	26.39
g/h	N/A	148.87
lb/MM Btu Output	N/A	3.52

Air/Fuel Ratio (A/F)	9.07

VERSION: **2.3** **3/23/2010**

VERSION: 2.3 3/23/2010

Manufacturer: Central Boiler, WoodMaster
Model: Edge 960, CleanFire 900
Date: 12/21/2020
Run: 4
Control #: 0117WB041E
Test Duration: 1538
Output Category: II

Appliance Type: Non-Cat

Temp. Units F (F or C)
Weight Units lb (kg or lb)

Wood Moisture (% wet): 17.83
Load Weight (lb wet): 387.90
Burn Rate (dry kg/h): 5.64
Total Particulate Emissions: 51.19 g

Fuel Data

	Maple	
HHV	19,973	kJ/kg
%C	50.64	
%H	6.02	
%O	41.74	
%Ash	1.35	

Averages	**1.50**	**10.51**	**#DIV/0!**	**173.07**	**70.49**	
					Temp. (ºF)	
Elapsed Time (min)	**Fuel Weight Remaining (lb)**	**Flue Gas Composition (%) CO**	**CO_2**	**O_2**	**Flue Gas**	**Room Temp**
0	387.90	0.04	17.40		252.0	72.0
1	387.00	0.03	16.77		226.0	72.0
2	385.80	0.15	8.23		205.0	72.0
3	384.60	0.12	5.02		193.0	72.0
4	383.47	0.13	4.45		186.0	72.0
5	381.68	0.16	3.92		227.0	72.0
6	380.28	1.90	17.82		255.0	72.0
7	378.83	0.46	19.22		272.0	72.0
8	377.47	0.26	19.51		276.0	72.0
9	375.70	0.09	18.62		280.0	72.0
10	374.31	0.08	18.30		278.0	72.0
11	372.95	0.07	18.29		283.0	72.0
12	371.62	0.08	18.49		284.0	72.0
13	371.23	0.08	17.99		281.0	72.0
14	369.50	0.07	17.91		285.0	72.0
15	368.10	0.08	18.23		286.0	72.0
16	366.79	0.08	17.58		287.0	72.0
17	364.56	0.07	17.29		286.0	72.0
18	363.63	0.07	17.25		292.0	72.0
19	362.31	0.08	17.32		291.0	72.0
20	360.96	0.07	16.88		290.0	72.0
21	359.01	0.06	16.93		294.0	72.0

22	358.59	0.07	16.71		297.0	72.0
23	357.35	0.07	16.91		297.0	72.0
24	355.30	0.07	16.49		299.0	72.0
25	354.12	0.07	16.65		300.0	72.0
26	353.18	0.07	16.53		301.0	72.0
27	351.32	0.07	16.55		302.0	72.0
28	350.08	0.07	16.36		270.0	72.0
29	350.14	0.02	12.55		249.0	72.0
30	350.42	0.01	8.87		236.0	72.0
31	350.26	0.02	6.89		227.0	72.0
32	350.52	0.04	5.20		223.0	72.0
33	350.00	0.05	3.87		220.0	72.0
34	350.01	0.03	5.15		216.0	72.0
35	350.24	0.03	4.45		213.0	72.0
36	350.11	0.04	3.71		210.0	72.0
37	350.50	0.05	3.44		206.0	72.0
38	350.46	0.05	2.92		207.0	72.0
39	350.39	0.05	2.54		206.0	72.0
40	350.90	0.04	2.14		205.0	72.0
41	350.43	0.05	1.89		202.0	72.0
42	350.63	0.06	1.83		200.0	72.0
43	351.05	0.09	1.91		197.0	72.0
44	350.24	0.10	2.02		194.0	72.0
45	350.61	0.12	2.17		192.0	72.0
46	350.54	0.14	2.35		189.0	72.0
47	350.83	0.16	2.57		187.0	72.0
48	350.75	0.16	2.60		184.0	72.0
49	351.16	0.19	2.92		182	72
50	351.45	0.19	2.89		179	72
51	350.68	0.2	2.96		177	72
52	351.11	0.19	2.91		175	72
53	350.80	0.19	2.86		173	72
54	351.04	0.2	2.88		171	72
55	351.19	0.19	2.87		169	72
56	350.77	0.2	2.9		167	72
57	351.29	0.19	2.84		165	72
58	350.44	0.19	2.71		163	72
59	351.16	0.19	2.72		161	72
60	350.89	0.18	2.57		160	72
61	350.73	0.19	2.7		158	72
62	350.77	0.19	2.66		156	72
63	351.70	0.17	2.41		154	72

64	351.43	0.18	2.48		153	72
65	351.29	0.19	2.56		151	72
66	350.89	0.18	2.47		150	72
67	351.02	0.18	2.39		149	72
68	351.34	0.18	2.4		147	72
69	351.13	0.17	2.28		146	72
70	351.10	0.18	2.36		145	72
71	351.42	0.18	2.3		144	72
72	351.23	0.19	2.34		143	72
73	351.45	0.17	2.2		141	72
74	351.13	0.18	2.2		141	72
75	351.58	0.18	2.17		140	71
76	351.65	0.18	2.19		138	72
77	351.59	0.17	2.09		138	71
78	352.15	0.18	2.16		137	71
79	351.32	0.17	2.08		136	71
80	351.58	0.18	2.08		135	71
81	351.07	0.18	2.08		134	71
82	350.98	0.17	1.98		133	71
83	351.90	0.17	1.95		133	71
84	351.68	0.18	2.02		131	71
85	351.59	0.18	1.98		130	71
86	351.41	0.18	1.95		130	71
87	351.54	0.18	1.95		128	71
88	351.92	0.17	1.91		128	71
89	351.67	0.18	1.95		127	71
90	351.36	0.17	1.88		126	71
91	351.77	0.18	1.89		126	71
92	351.38	0.18	1.93		126	71
93	352.24	0.18	1.92		125	71
94	351.81	0.18	1.88		124	71
95	351.72	0.18	1.89		124	71
96	352.28	0.18	1.92		123	71
97	352.09	0.18	1.89		122	71
98	351.62	0.18	1.88		157	71
99	351.63	0.79	5.89		156	71
100	350.94	1.56	10.12		146	71
101	351.57	1.55	10		139	71
102	351.17	1.48	9.65		134	71
103	351.63	1.36	9.01		131	71
104	351.76	1.2	8.08		128	71
105	351.11	1.1	7.42		127	71

106	351.50	1.07	7.21		126	71
107	351.48	0.95	6.5		125	71
108	351.90	0.89	6.08		123	71
109	351.34	0.82	5.69		122	71
110	351.48	0.78	5.41		122	71
111	351.26	0.76	5.26		121	71
112	350.99	0.7	4.88		120	71
113	351.39	0.69	4.84		120	71
114	352.26	0.68	4.76		120	71
115	351.29	0.64	4.53		118	71
116	351.67	0.61	4.38		118	71
117	351.19	0.59	4.31		118	71
118	351.18	0.57	4.16		117	71
119	351.73	0.56	4.15		116	71
120	351.16	0.54	4.01		115	71
121	351.70	0.52	3.86		115	71
122	351.08	0.51	3.87		114	71
123	351.17	0.5	3.81		114	71
124	352.05	0.48	3.65		115	71
125	351.59	0.46	3.53		114	71
126	351.55	0.44	3.38		113	71
127	351.39	0.42	3.27		113	71
128	351.26	0.39	3.07		112	71
129	350.89	0.39	3.05		151	70
130	350.99	0.91	7.58		146	70
131	351.26	1.68	10.73		137	70
132	350.75	1.63	10.46		131	70
133	350.62	1.54	9.95		127	71
134	350.65	1.44	9.36		124	71
135	351.12	1.29	8.56		123	70
136	351.05	1.15	7.66		121	70
137	351.17	1.04	6.92		119	70
138	351.00	0.99	6.6		118	70
139	349.52	0.91	6.1		117	70
140	351.46	0.84	5.55		115	70
141	351.28	0.77	5.17		114	70
142	350.41	0.72	4.84		113	70
143	351.19	0.67	4.5		113	70
144	351.07	0.64	4.33		112	70
145	351.17	0.61	4.13		112	70
146	350.98	0.58	3.96		112	70
147	351.25	0.54	3.69		111	70

148	351.28	0.54	3.66		111	70
149	351.39	0.5	3.44		111	70
150	351.03	0.48	3.33		109	70
151	351.41	0.47	3.26		108	70
152	351.43	0.45	3.11		119	70
153	349.69	0.49	3.38		167	70
154	349.08	1.97	11.55		204	70
155	348.08	0.61	17.67		231	70
156	345.66	0.06	17.75		247	70
157	344.94	0.04	17.34		257	70
158	343.81	0.04	17.28		266	70
159	342.77	0.06	17.65		274	70
160	341.72	0.08	18.38		280	70
161	339.28	0.1	18.71		286	70
162	337.81	0.11	19.3		290	70
163	336.44	0.11	19.3		288	70
164	334.31	0.09	18.91		290	70
165	333.80	0.09	18.95		289	70
166	332.15	0.09	18.99		288	70
167	330.55	0.1	19.04		287	70
168	328.95	0.09	18.57		291	70
169	326.70	0.09	18.52		292	70
170	325.63	0.09	18.45		294	70
171	324.76	0.09	18.33		294	70
172	322.89	0.09	18.21		296	70
173	321.14	0.09	18		301	70
174	319.78	0.09	17.9		302	70
175	318.35	0.09	17.79		303	70
176	316.69	0.08	17.52		306	70
177	315.48	0.08	17.49		307	70
178	313.09	0.07	17.48		308	70
179	312.03	0.07	17.41		309	70
180	310.72	0.07	17.43		308	70
181	309.21	0.07	17.15		298	70
182	308.39	0.06	16.47		265	70
183	308.30	0.01	14.93		248	70
184	307.49	0.01	12.42		236	70
185	307.79	0.01	11.12		229	70
186	306.93	0.05	8.63		225	70
187	306.70	0.03	10.76		220	70
188	306.78	0.02	10.3		216	70
189	307.38	0.04	8.26		213	70

190	307.26	0.05	7.33		210	70
191	307.40	0.07	6.22		208	70
192	306.54	0.09	5.21		209	70
193	307.51	0.09	4.48		208	70
194	307.18	0.14	4.41		206	70
195	307.53	0.24	4.84		203	70
196	307.33	0.35	5.33		201	70
197	307.15	0.46	5.93		198	70
198	307.82	0.49	5.9		195	70
199	307.35	0.55	6.12		193	70
200	307.79	0.52	5.76		190	70
201	307.43	0.58	6.08		187	70
202	307.06	0.53	5.51		185	70
203	307.54	0.51	5.3		182	70
204	307.55	0.52	5.3		180	70
205	307.25	0.47	4.92		177	70
206	307.07	0.44	4.67		175	70
207	307.25	0.45	4.71		173	70
208	307.28	0.43	4.46		171	70
209	307.51	0.42	4.33		169	70
210	308.16	0.38	4.04		167	70
211	307.79	0.39	4.08		165	70
212	307.90	0.36	3.81		163	70
213	307.28	0.38	3.91		161	70
214	307.73	0.35	3.61		160	70
215	307.97	0.35	3.57		158	70
216	307.58	0.33	3.42		156	70
217	308.56	0.33	3.42		154	70
218	307.84	0.32	3.29		153	70
219	307.84	0.32	3.29		152	70
220	307.56	0.32	3.28		150	70
221	307.90	0.31	3.12		149	70
222	308.60	0.31	3.09		148	70
223	307.64	0.32	3.18		147	70
224	308.01	0.31	3.01		145	70
225	307.89	0.29	2.92		143	70
226	307.82	0.27	2.68		141	70
227	308.11	0.27	2.65		141	70
228	307.82	0.29	2.78		140	70
229	308.40	0.29	2.82		139	70
230	308.06	0.28	2.72		138	70
231	307.88	0.27	2.6		137	70

232	307.97	0.28	2.66		136	70
233	308.50	0.26	2.49		135	70
234	307.94	0.27	2.53		134	70
235	308.25	0.26	2.48		133	70
236	308.28	0.27	2.51		132	70
237	307.96	0.27	2.52		131	70
238	308.26	0.27	2.56		130	70
239	308.34	0.26	2.47		129	69
240	308.23	0.26	2.42		128	70
241	307.92	0.27	2.51		128	69
242	308.27	0.27	2.56		127	70
243	307.98	0.27	2.53		126	70
244	307.81	0.28	2.68		126	70
245	307.65	0.29	2.78		125	69
246	307.72	0.3	2.87		124	69
247	308.42	0.28	2.78		125	69
248	308.15	0.32	3.12		123	69
249	307.94	0.31	3.05		123	70
250	308.35	0.33	3.25		123	69
251	308.07	0.33	3.32		121	70
252	307.67	0.33	3.35		166	70
253	308.06	1.26	9.03		154	70
254	307.09	1.49	9.61		145	69
255	307.86	1.43	9.54		140	70
256	307.80	1.26	8.82		136	69
257	308.07	1.1	7.91		133	69
258	307.33	0.98	7.16		130	69
259	307.44	0.85	6.3		129	69
260	307.65	0.81	6.03		127	69
261	307.50	0.75	5.69		125	69
262	307.46	0.71	5.37		125	69
263	307.75	0.69	5.27		123	69
264	308.18	0.66	5.09		123	69
265	307.97	0.61	4.74		123	69
266	307.63	0.6	4.75		122	69
267	307.37	0.58	4.66		121	69
268	307.86	0.55	4.43		120	69
269	307.83	0.53	4.39		121	69
270	307.71	0.52	4.3		120	69
271	307.31	0.51	4.33		120	69
272	307.98	0.48	4.08		119	69
273	307.66	0.47	4.07		118	69

274	307.66	0.45	3.98		118	69
275	307.69	0.44	3.96		118	69
276	307.70	0.44	3.94		119	69
277	307.53	0.42	3.84		117	69
278	307.78	0.42	3.92		118	69
279	307.65	0.4	3.82		116	69
280	307.35	0.39	3.76		115	69
281	307.86	0.38	3.65		116	69
282	307.67	0.38	3.76		123	69
283	307.40	0.38	3.83		151	69
284	307.52	1.32	8.36		141	69
285	307.74	1.44	8.63		135	69
286	307.31	1.32	8.21		131	69
287	307.22	1.21	7.81		128	69
288	307.66	1.11	7.37		125	69
289	307.75	0.95	6.53		123	69
290	307.67	0.83	5.78		121	69
291	307.29	0.77	5.49		119	69
292	307.15	0.7	5.03		119	69
293	307.77	0.69	5		118	69
294	307.54	0.63	4.67		117	69
295	307.65	0.62	4.61		116	69
296	307.77	0.56	4.28		122	69
297	306.97	0.58	4.47		167	69
298	305.06	1.76	9.49		202	69
299	303.72	0.6	15.49		229	69
300	302.14	0.15	17.08		245	69
301	301.13	0.05	16.44		255	69
302	299.76	0.05	16.2		261	69
303	299.15	0.06	16.23		267	69
304	298.03	0.07	16.65		273	69
305	296.03	0.08	17.06		278	69
306	295.09	0.09	17.4		283	69
307	292.55	0.09	17.66		287	69
308	292.55	0.1	17.92		291	69
309	290.03	0.12	18.29		295	69
310	289.12	0.12	18.7		297	69
311	287.08	0.12	18.24		298	69
312	285.59	0.12	18.29		298	69
313	284.43	0.12	17.94		300	69
314	282.34	0.12	18.1		301	69
315	281.44	0.11	17.95		303	69

316	278.63	0.12	18.11		303	69
317	277.99	0.12	18.14		304	69
318	276.29	0.11	18.09		304	69
319	274.74	0.1	17.97		304	69
320	272.75	0.1	17.83		305	69
321	271.71	0.1	17.79		304	69
322	270.49	0.1	17.78		305	69
323	268.09	0.09	17.71		306	69
324	267.22	0.09	17.68		299	69
325	266.00	0.08	17.28		266	69
326	265.48	0.02	16.95		249	69
327	265.45	0.01	16.03		238	69
328	264.82	0.01	15.64		230	69
329	264.03	0.02	13.17		225	69
330	263.88	0.2	17.67		220	69
331	263.70	0.08	17.56		216	69
332	263.80	0.02	15.17		212	69
333	263.62	0.02	14.33		209	69
334	263.60	0.02	12.53		207	69
335	263.29	0.04	10.8		207	69
336	263.61	0.18	10.19		207	69
337	263.03	1.06	12.79		205	69
338	263.12	2.13	15.31		203	69
339	263.33	2.86	16.45		200	69
340	263.54	3.14	16.49		197	69
341	263.16	3.47	17.14		195	69
342	263.32	3.61	17.33		192	69
343	262.58	3.37	16.21		190	69
344	263.23	3.52	16.73		187	69
345	263.60	3.18	15.32		185	69
346	263.12	2.96	14.46		182	69
347	263.14	2.92	14.29		180	69
348	262.77	2.69	13.26		178	69
349	263.08	2.66	13.21		176	69
350	263.32	2.56	12.85		173	69
351	263.32	2.32	11.78		171	69
352	263.49	2.19	11.3		169	69
353	263.53	1.99	10.38		168	69
354	263.69	1.94	10.14		166	69
355	263.67	1.85	9.63		163	69
356	263.51	1.63	8.68		162	69
357	263.52	1.65	8.72		160	69

358	263.45	1.56	8.33		158	69
359	263.67	1.41	7.69		157	69
360	263.57	1.36	7.51		156	69
361	263.41	1.27	7.09		154	69
362	263.90	1.19	6.71		152	69
363	263.95	1.12	6.35		150	69
364	263.46	1.07	6.1		149	69
365	263.05	1	5.78		148	69
366	263.69	0.96	5.54		147	69
367	264.53	0.89	5.23		146	69
368	263.61	0.94	5.43		144	69
369	263.45	0.86	5.06		142	69
370	263.58	0.77	4.63		141	69
371	263.73	0.78	4.61		140	69
372	263.79	0.79	4.69		140	69
373	264.18	0.77	4.61		139	69
374	264.11	0.72	4.27		137	69
375	263.64	0.69	4.11		137	69
376	264.06	0.72	4.3		136	69
377	263.68	0.7	4.15		134	69
378	263.72	0.64	3.81		134	69
379	263.71	0.63	3.68		133	69
380	264.25	0.61	3.6		131	69
381	263.49	0.6	3.55		131	69
382	263.88	0.6	3.49		130	69
383	263.72	0.57	3.36		130	69
384	264.53	0.57	3.3		129	69
385	263.67	0.58	3.34		127	69
386	263.64	0.56	3.24		128	69
387	263.43	0.57	3.23		128	69
388	263.73	0.57	3.25		127	69
389	263.95	0.56	3.18		126	69
390	264.76	0.55	3.13		124	69
391	264.17	0.53	3.05		123	69
392	264.15	0.52	3		124	69
393	264.53	0.54	3.09		123	69
394	263.39	0.55	3.14		122	69
395	264.21	0.51	2.96		169	69
396	263.61	1.81	9.82		157	68
397	262.96	1.98	10.96		149	69
398	263.28	1.97	11.48		144	69
399	263.19	1.76	10.78		139	69

400	263.21	1.44	9.18		137	69
401	263.16	1.24	8.06		132	69
402	263.63	1.2	7.76		132	69
403	263.51	1.09	7.12		131	69
404	263.65	1.02	6.73		129	69
405	263.28	0.96	6.34		128	69
406	263.78	0.9	5.91		127	68
407	263.78	0.89	5.84		126	68
408	263.63	0.82	5.46		124	68
409	263.78	0.79	5.23		123	68
410	263.51	0.74	4.94		123	69
411	263.94	0.72	4.83		120	69
412	263.60	0.69	4.62		122	69
413	263.54	0.66	4.46		118	68
414	263.57	0.62	4.24		120	69
415	263.00	0.61	4.11		118	69
416	263.56	0.57	3.92		119	68
417	262.86	0.56	3.82		118	68
418	264.14	0.53	3.67		117	68
419	263.75	0.5	3.5		117	68
420	264.29	0.49	3.39		116	68
421	264.42	0.47	3.29		114	68
422	263.99	0.47	3.3		115	68
423	263.30	0.46	3.25		115	68
424	263.69	0.44	3.14		114	68
425	264.02	0.44	3.18		113	68
426	262.86	0.44	3.16		154	69
427	263.43	1.39	8.88		144	68
428	262.89	1.55	9.84		138	68
429	262.91	1.55	9.92		133	68
430	263.06	1.43	9.44		129	68
431	263.43	1.25	8.5		127	68
432	263.33	1.1	7.61		125	68
433	264.07	1.02	7.09		123	68
434	263.00	0.93	6.5		122	68
435	263.39	0.84	5.93		120	68
436	263.34	0.78	5.49		121	68
437	263.25	0.75	5.33		118	68
438	262.30	0.68	4.83		117	68
439	263.77	0.67	4.76		116	68
440	263.92	0.64	4.58		114	68
441	263.29	0.59	4.26		113	68

442	263.10	0.59	4.24		114	68
443	263.52	0.58	4.18		113	68
444	263.72	0.57	4.13		113	68
445	263.78	0.54	3.97		112	68
446	263.19	0.53	3.93		111	68
447	263.72	0.51	3.82		111	68
448	263.00	0.49	3.69		112	68
449	263.59	0.46	3.53		110	68
450	263.74	0.46	3.48		110	68
451	263.72	0.43	3.34		109	68
452	263.37	0.42	3.22		108	68
453	262.54	0.41	3.2		153	68
454	261.72	1.12	7.41		193	68
455	260.73	1.4	13.01		220	68
456	259.33	0.28	15.92		238	68
457	257.97	0.08	15.77		249	68
458	257.04	0.05	15.78		256	68
459	255.96	0.08	15.81		261	68
460	254.70	0.08	15.69		265	68
461	253.46	0.08	15.61		269	68
462	252.84	0.09	16.03		273	68
463	251.61	0.09	16.52		278	68
464	249.83	0.11	17.1		284	68
465	248.49	0.13	17.55		288	68
466	246.58	0.14	17.78		291	68
467	245.69	0.14	17.92		298	68
468	244.04	0.17	19.04		300	68
469	242.31	0.15	18.79		301	68
470	241.38	0.14	18.28		302	68
471	239.21	0.13	18.15		303	68
472	237.49	0.13	18.1		305	68
473	235.94	0.12	18.14		306	68
474	235.21	0.13	18.45		302	68
475	233.02	0.13	18.95		300	68
476	231.49	0.13	18.74		301	68
477	229.64	0.14	19.2		303	68
478	228.12	0.15	19.54		304	68
479	226.65	0.15	19.61		306	68
480	225.24	0.15	19.79		292	68
481	224.63	0.11	18.49		263	68
482	223.42	0.14	20.07		248	68
483	222.91	0.09	19.62		237	68

484	222.38	0.05	19.17		230	68
485	222.00	0.04	15.2		224	68
486	221.19	1.74	20.78		219	68
487	221.57	0.83	20.78		215	68
488	221.22	0.38	20.78		211	68
489	221.20	0.37	20.78		208	68
490	220.92	0.19	19.65		206	68
491	221.03	0.1	17.85		206	68
492	221.03	1.93	19.3		205	68
493	220.99	5.2	20.78		203	68
494	220.52	5.2	20.78		201	68
495	220.83	5.2	20.78		199	68
496	220.45	5.2	20.78		196	68
497	220.45	5.2	20.78		194	68
498	220.02	5.2	20.78		191	68
499	220.58	5.2	20.78		189	68
500	220.51	5.2	20.78		186	68
501	221.32	5.2	20.78		185	68
502	220.43	5.2	20.78		182	68
503	220.48	5.2	20.78		179	68
504	220.43	5.2	20.78		178	68
505	220.30	5.2	20.78		176	68
506	220.41	5.2	20.78		175	68
507	219.78	5.2	20.78		172	68
508	220.38	5.2	20.65		170	68
509	220.43	5.2	20.25		169	68
510	220.23	5.2	19.35		167	68
511	220.27	5.2	17.89		165	68
512	220.59	5.2	17.57		162	68
513	220.74	5.2	17.03		161	68
514	220.50	5.2	15.85		162	68
515	220.64	5.2	15.83		159	68
516	220.64	4.71	14.53		159	68
517	220.10	4.67	14.45		157	68
518	220.27	4.5	14.17		156	68
519	220.49	4.17	13.36		156	68
520	220.97	3.99	13.04		156	68
521	220.51	3.72	12.37		153	68
522	220.24	3.49	11.79		153	68
523	220.52	3.29	11.3		152	68
524	220.49	3.17	11.09		150	68
525	220.83	3.02	10.75		148	68

526	220.64	2.77	10.09		147	68
527	219.83	2.61	9.71		146	68
528	220.03	2.55	9.64		147	68
529	220.90	2.39	9.26		145	68
530	220.23	2.22	8.78		144	68
531	220.70	2.14	8.59		143	68
532	221.01	2.02	8.33		139	68
533	220.52	1.95	8.16		142	68
534	220.96	1.9	8.06		139	68
535	220.36	1.8	7.78		140	68
536	220.65	1.74	7.7		137	68
537	220.81	1.73	7.78		136	68
538	220.22	1.58	7.32		134	68
539	220.70	1.48	7.05		135	68
540	220.08	1.46	7.05		135	68
541	221.47	1.45	7.08		132	68
542	220.03	1.4	6.98		134	68
543	220.51	1.35	6.85		133	68
544	220.58	1.29	6.63		129	68
545	220.38	1.31	6.81		130	68
546	220.73	1.19	6.33		130	68
547	220.65	1.19	6.38		128	68
548	220.60	1.15	6.22		127	68
549	220.02	1.08	5.94		127	68
550	220.22	1.08	6		137	68
551	219.99	1.16	6.34		154	68
552	220.16	1.82	9.67		148	68
553	220.40	1.87	9.95		145	68
554	220.02	1.88	10.12		142	68
555	219.53	1.77	9.68		138	68
556	219.45	1.53	8.64		136	68
557	219.73	1.38	7.91		136	68
558	219.79	1.28	7.4		132	68
559	219.75	1.18	6.91		131	68
560	220.30	1.11	6.5		129	68
561	219.47	1.04	6.18		128	68
562	219.84	1.01	6.01		127	68
563	220.12	0.95	5.71		125	68
564	219.17	0.95	5.71		126	68
565	219.87	0.92	5.6		123	68
566	220.09	0.85	5.27		124	68
567	219.51	0.84	5.27		124	68

568	220.77	0.81	5.09		121	68
569	220.16	0.79	5.01		122	68
570	220.58	0.76	4.92		121	68
571	220.83	0.75	4.91		122	68
572	220.57	0.72	4.79		120	68
573	220.11	0.67	4.51		120	68
574	220.24	0.67	4.56		120	68
575	220.16	0.65	4.48		117	68
576	219.73	0.66	4.56		119	68
577	220.43	0.66	4.57		119	68
578	220.00	0.63	4.44		116	68
579	220.41	0.6	4.33		116	68
580	220.31	0.59	4.27		117	68
581	220.06	0.59	4.29		144	68
582	219.67	0.71	4.94		144	68
583	219.74	1.31	8.25		139	68
584	219.89	1.39	8.46		135	68
585	219.80	1.34	8.3		133	68
586	220.10	1.24	7.86		130	68
587	219.91	1.15	7.49		128	68
588	219.49	1.02	6.81		125	68
589	220.32	0.93	6.28		124	68
590	220.12	0.81	5.56		123	68
591	220.04	0.78	5.42		122	68
592	219.59	0.74	5.19		120	68
593	219.72	0.72	5.05		118	68
594	219.39	0.67	4.74		119	68
595	219.90	0.64	4.54		118	68
596	219.84	0.61	4.35		117	68
597	219.58	0.59	4.29		117	68
598	219.48	0.58	4.21		116	68
599	220.01	0.56	4.14		116	68
600	219.33	0.54	4.02		113	68
601	219.79	0.51	3.86		114	68
602	219.93	0.5	3.82		112	68
603	219.98	0.49	3.78		113	68
604	219.67	0.47	3.63		112	68
605	219.58	0.46	3.59		113	68
606	219.88	0.45	3.5		113	68
607	219.85	0.44	3.44		110	68
608	220.49	0.43	3.38		112	68
609	219.91	0.43	3.42		112	68

610	219.81	0.41	3.33		139	68
611	218.83	0.52	4.26		163	68
612	218.72	1.82	8.79		197	68
613	216.14	1.62	13.84		222	68
614	215.19	0.27	16.21		240	68
615	214.57	0.08	16.05		251	68
616	212.38	0.06	15.88		259	68
617	211.88	0.06	16.09		265	68
618	210.49	0.07	16.38		270	68
619	209.67	0.08	16.54		276	68
620	208.70	0.09	16.93		281	68
621	207.47	0.09	17.42		285	68
622	205.82	0.1	17.81		291	68
623	204.71	0.11	18.4		294	68
624	203.65	0.1	18.12		293	68
625	202.22	0.09	18.02		292	68
626	200.44	0.09	17.85		292	68
627	198.97	0.09	18.24		293	68
628	198.38	0.1	18.69		292	68
629	196.23	0.1	18.71		293	68
630	194.65	0.11	18.85		295	68
631	192.96	0.11	19.11		297	68
632	191.75	0.11	19.44		299	68
633	190.31	0.13	19.82		301	68
634	188.12	0.16	20.12		302	68
635	187.56	0.13	19.95		303	68
636	185.45	0.12	19.85		301	68
637	184.23	0.3	19.05		277	68
638	183.64	0.05	17.56		255	68
639	182.49	0.05	19.37		242	68
640	182.06	0.11	20.23		232	68
641	181.58	0.03	18.76		226	68
642	181.61	0.2	16.57		221	68
643	180.84	2.24	20.78		216	68
644	181.36	1.09	20.78		212	68
645	180.72	0.69	20.78		209	68
646	180.09	0.63	20.78		206	68
647	179.97	0.34	20.78		205	68
648	180.10	0.37	20.4		204	68
649	179.78	4.55	20.78		203	68
650	179.71	5.2	20.78		201	68
651	180.22	5.2	20.78		199	68

652	180.10	5.2	20.78		196	68
653	179.84	5.2	20.78		194	68
654	179.63	5.2	20.78		192	68
655	179.73	5.2	20.78		191	68
656	179.13	5.2	20.78		189	68
657	179.30	5.2	20.78		185	68
658	179.18	5.2	20.78		184	68
659	179.66	5.2	20.78		181	68
660	179.32	5.2	20.78		179	68
661	179.18	5.2	20.78		178	68
662	179.19	5.2	20.78		175	68
663	179.06	5.2	20.78		172	68
664	179.58	5.2	20.78		172	68
665	178.82	5.2	20.78		170	68
666	179.08	5.2	20.78		169	68
667	179.26	5.2	20.78		168	68
668	179.67	5.2	20.78		166	68
669	179.30	5.2	20.14		165	68
670	179.54	5.2	20.78		164	68
671	179.16	5.2	19.87		163	68
672	179.32	5.2	19.66		161	68
673	179.39	5.2	18.43		160	68
674	179.14	5.2	17.49		160	68
675	179.36	5.2	17.62		160	68
676	179.37	5.2	16.67		159	68
677	179.51	5.2	15.95		156	68
678	179.00	5.09	15.42		156	68
679	178.96	5.05	15.27		155	68
680	178.92	4.86	14.84		153	68
681	179.37	4.55	14.06		153	68
682	179.56	4.24	13.25		152	68
683	179.42	4.18	13.13		154	68
684	178.74	4.05	12.83		150	68
685	179.13	3.71	11.93		149	68
686	179.02	3.69	11.89		150	68
687	179.16	3.49	11.42		147	68
688	179.13	3.24	10.74		148	68
689	179.28	3.15	10.51		148	68
690	179.22	2.98	10.04		147	68
691	179.76	2.96	10.03		144	68
692	178.91	2.8	9.6		144	68
693	179.30	2.66	9.25		144	68

694	178.73	2.62	9.14		141	68
695	179.25	2.52	8.89		140	68
696	179.22	2.35	8.4		139	68
697	179.37	2.23	8.04		138	68
698	179.15	2.26	8.16		139	68
699	179.53	2.23	8.1		137	68
700	179.47	2.12	7.8		138	68
701	179.28	2.09	7.76		136	68
702	179.52	1.96	7.39		135	68
703	179.01	1.89	7.18		134	68
704	178.83	1.93	7.34		135	68
705	178.24	1.86	7.14		133	68
706	178.91	1.85	7.14		133	68
707	179.40	1.77	6.89		154	68
708	178.95	3.14	10.52		149	68
709	178.92	1.89	9.78		146	68
710	178.55	1.92	10.16		144	68
711	178.80	1.89	10.08		141	68
712	178.90	1.68	9.09		140	68
713	178.67	1.5	8.25		136	68
714	178.56	1.3	7.24		135	68
715	178.78	1.24	6.92		133	68
716	177.91	1.13	6.32		131	68
717	178.38	1.08	6.07		133	68
718	178.39	1.04	5.84		130	68
719	178.09	1.02	5.74		130	68
720	178.87	0.97	5.49		127	68
721	178.68	0.96	5.4		125	68
722	178.55	0.88	5		126	68
723	178.23	0.86	4.87		124	68
724	178.48	0.83	4.77		124	68
725	178.69	0.82	4.69		124	68
726	178.76	0.79	4.55		124	68
727	178.75	0.76	4.41		122	68
728	178.64	0.72	4.19		121	68
729	178.54	0.71	4.16		121	68
730	179.05	0.69	4.06		120	68
731	178.74	0.7	4.11		118	68
732	178.30	0.65	3.86		118	68
733	178.61	0.64	3.8		120	68
734	178.66	0.64	3.82		117	68
735	178.94	0.61	3.68		117	68

736	178.76	0.6	3.62		117	68
737	178.61	0.62	3.75		117	68
738	179.13	0.6	3.62		143	68
739	178.67	1.1	5.91		140	68
740	178.34	1.44	8.32		136	68
741	178.53	1.42	8.22		133	68
742	178.49	1.33	7.87		131	68
743	178.05	1.24	7.59		129	67
744	178.29	1.1	6.89		125	68
745	178.13	0.92	5.89		124	68
746	178.07	0.88	5.67		122	68
747	178.32	0.79	5.22		122	68
748	178.95	0.75	4.95		121	68
749	177.98	0.71	4.73		120	68
750	178.52	0.7	4.63		118	68
751	177.78	0.67	4.48		142	68
752	176.70	0.78	5.16		167	68
753	175.77	1.61	10.37		203	68
754	174.57	0.23	15.69		229	68
755	173.69	0.06	16.52		248	68
756	172.62	0.05	16.54		258	68
757	171.55	0.06	16.4		264	68
758	170.46	0.06	16.33		268	69
759	169.68	0.08	16.29		272	69
760	168.19	0.08	16.56		276	69
761	167.63	0.09	17		281	69
762	166.51	0.09	17.32		285	69
763	164.99	0.1	17.64		290	70
764	163.55	0.1	18.01		294	70
765	162.75	0.11	18.47		296	70
766	161.18	0.1	18.37		294	71
767	159.59	0.1	18.24		297	71
768	158.12	0.11	18.58		294	71
769	156.85	0.1	18.6		294	71
770	155.73	0.1	18.73		295	71
771	153.86	0.11	19.15		296	72
772	152.75	0.12	19.42		298	72
773	150.26	0.14	19.68		300	72
774	149.56	0.16	19.96		302	72
775	148.13	0.19	20.12		296	72
776	147.08	0.36	19.34		264	72
777	145.97	0.06	18.67		248	73

778	145.12	0.05	18.7		236	73
779	144.59	0.09	19.79		229	73
780	145.02	0.03	17.57		224	73
781	144.49	2.99	20.78		219	73
782	143.47	3.13	20.78		214	73
783	144.03	2.2	20.78		211	74
784	143.28	2.31	20.78		208	74
785	142.98	1.83	20.78		205	74
786	143.06	1.28	20.78		205	74
787	142.79	3.08	20.78		204	74
788	142.97	5.2	20.78		203	74
789	141.97	5.2	20.78		201	74
790	142.59	5.2	20.78		199	74
791	142.30	5.2	20.78		197	74
792	142.36	5.2	20.78		195	74
793	142.45	5.2	20.78		193	74
794	142.09	5.2	20.78		191	75
795	141.97	5.2	20.78		190	75
796	142.44	5.2	20.78		187	75
797	141.95	5.2	20.78		186	75
798	142.22	5.2	20.78		184	75
799	141.92	5.2	20.78		182	75
800	141.89	5.2	20.78		180	75
801	142.04	5.2	20.78		180	75
802	141.86	5.2	20.78		177	76
803	140.92	5.2	20.78		177	76
804	141.28	5.2	20.78		176	76
805	140.47	5.2	20.78		175	76
806	140.60	3	12.29		172	76
807	141.21	0.07	2.98		172	76
808	141.00	0	0.22		172	76
809	140.72	0.02	1.83		170	76
810	141.24	3.58	9.39		169	76
811	140.75	5.2	20.78		166	77
812	141.22	0.02	0.14		167	77
813	141.24	0.01	0.04		168	77
814	140.75	4.37	17.27		167	77
815	140.89	5.2	18.31		163	77
816	140.82	3.22	9.68		162	77
817	140.63	0.76	3.68		162	77
818	140.45	5.2	18.34		160	77
819	141.32	5.2	18.1		160	77

820	140.75	5.2	17.84		158	77
821	141.24	5.2	17.39		158	77
822	140.73	5.2	17.01		159	77
823	140.84	5.2	16.69		158	77
824	140.59	5.2	16.64		157	77
825	141.11	5.2	14.86		155	78
826	141.19	5.2	14.99		156	78
827	141.10	5.2	15.18		152	78
828	140.93	5.2	14.99		153	78
829	140.53	5.2	14.82		154	78
830	141.11	5.2	14.99		152	78
831	140.59	5.18	14.62		153	78
832	140.89	4.57	13.09		148	78
833	140.94	4.68	13.41		150	78
834	140.87	4.73	13.57		153	78
835	140.92	4.5	13		150	78
836	140.60	4.41	12.86		149	78
837	140.84	4.17	12.22		150	78
838	141.13	4.02	11.89		146	78
839	141.09	3.7	11.12		146	78
840	140.82	3.75	11.25		144	78
841	140.92	3.64	11		145	78
842	140.84	3.57	10.86		145	78
843	141.19	3.45	10.57		145	78
844	140.90	3.42	10.5		143	78
845	140.66	3.19	9.91		155	78
846	140.17	3.33	11.74		152	78
847	140.01	2.18	10.35		150	78
848	140.19	2.28	10.81		148	77
849	140.09	2.21	10.5		145	77
850	140.35	2	9.63		143	77
851	139.88	1.84	8.84		141	77
852	139.43	1.74	8.38		141	77
853	140.06	1.64	7.9		139	76
854	139.49	1.45	7.12		136	76
855	139.96	1.38	6.8		136	76
856	139.73	1.39	6.79		134	76
857	139.78	1.27	6.25		133	75
858	139.69	1.22	6.06		135	75
859	139.82	1.25	6.14		132	75
860	139.87	1.14	5.68		133	75
861	139.39	1.15	5.69		132	74

862	140.32	1.13	5.61		130	74
863	139.22	0.03	0.75		129	74
864	139.64	0.07	0.98		129	74
865	139.46	0.96	4.72		129	74
866	139.35	0.92	4.62		126	73
867	139.41	0.91	4.61		126	73
868	139.35	0.85	4.36		125	73
869	139.51	0.82	4.23		124	73
870	139.42	0.83	4.3		124	73
871	139.74	0.79	4.14		125	73
872	139.43	0.8	4.17		121	73
873	139.24	0.72	3.82		122	72
874	139.85	0.7	3.73		122	72
875	139.43	0.71	3.75		122	72
876	139.65	0.79	4.16		146	72
877	139.09	1.49	8.74		141	72
878	138.89	1.51	8.81		138	72
879	139.27	1.42	8.4		135	72
880	138.96	1.3	7.78		133	71
881	138.76	1.24	7.52		131	71
882	138.79	1.12	6.88		129	72
883	138.90	1.01	6.3		127	72
884	139.07	0.94	5.85		125	71
885	138.77	0.86	5.38		124	71
886	139.03	0.77	4.91		122	71
887	138.85	0.73	4.67		123	72
888	138.93	0.72	4.59		121	71
889	138.68	0.69	4.41		120	71
890	138.89	0.63	4.04		120	71
891	139.05	0.67	4.27		118	71
892	139.06	0.57	3.72		119	71
893	138.92	0.59	3.81		117	71
894	139.14	0.55	3.56		117	71
895	139.15	0.56	3.59		116	71
896	139.39	0.54	3.49		116	71
897	139.33	0.55	3.57		114	71
898	139.08	0.51	3.34		115	72
899	139.45	0.52	3.4		112	72
900	138.76	0.48	3.16		114	72
901	138.94	0.47	3.07		113	71
902	139.34	0.46	3.03		114	72
903	138.89	0.48	3.14		112	72

904	139.38	0.43	2.85		111	71
905	138.93	0.44	2.87		112	72
906	138.98	0.43	2.84		140	71
907	139.19	0.77	4.92		166	72
908	138.33	1.88	10.25		199	72
909	137.61	0.36	16.22		226	72
910	136.66	0.06	16.48		244	72
911	135.05	0.05	16.26		254	72
912	134.76	0.05	16.02		260	72
913	133.47	0.05	15.72		264	72
914	133.11	0.06	15.78		267	72
915	132.04	0.07	15.78		270	72
916	131.38	0.07	15.87		272	72
917	130.13	0.07	16.01		275	72
918	129.71	0.08	16.18		279	72
919	128.74	0.08	16.53		283	72
920	127.46	0.09	16.83		285	72
921	126.66	0.09	16.88		289	72
922	125.75	0.09	17.12		293	72
923	124.16	0.1	17.6		296	72
924	123.13	0.1	17.7		297	72
925	121.62	0.09	17.37		299	72
926	121.25	0.09	17.61		299	72
927	119.48	0.09	17.71		297	71
928	117.89	0.09	17.47		300	72
929	116.88	0.1	17.93		299	72
930	114.93	0.1	18.16		298	72
931	114.00	0.1	17.96		296	72
932	112.66	0.09	18		277	72
933	111.27	0.04	15.23		254	72
934	110.58	0.03	17.02		241	72
935	109.88	0.05	17.73		232	72
936	109.88	0.03	17.52		226	72
937	108.82	0.03	14.04		221	72
938	108.26	2.75	20.78		216	71
939	108.16	3.13	20.78		213	71
940	107.77	2.53	20.78		210	72
941	108.08	1.98	20.78		207	72
942	107.46	2.03	20.78		205	72
943	107.69	1.88	20.78		204	72
944	107.28	1.63	20.78		203	72
945	107.27	1.4	20.78		201	72

946	107.30	1.7	20.78		199	72
947	106.67	3.38	20.78		197	72
948	106.64	5.2	20.78		194	72
949	106.53	5.2	20.78		192	72
950	106.28	5.2	20.78		191	72
951	105.87	5.2	20.78		189	72
952	106.64	5.2	20.78		187	72
953	106.34	5.2	20.78		184	72
954	106.13	4.87	14.74		183	72
955	105.73	5.2	20.78		180	72
956	105.43	5.2	20.78		180	72
957	105.63	5.2	20.78		178	72
958	105.70	5.2	20.78		177	72
959	105.95	5.2	20.78		176	72
960	105.49	5.2	20.78		175	72
961	105.66	5.2	20.78		173	72
962	105.48	5.2	20.78		171	72
963	105.33	5.2	20.78		171	72
964	105.47	5.2	20.78		168	71
965	105.62	5.2	20.78		167	72
966	103.93	5.2	20.78		166	72
967	104.28	5.2	20.78		164	72
968	103.51	0	0.1		163	72
969	103.96	0.01	0.74		162	72
970	103.52	0	0.55		158	72
971	103.82	0	0.37		160	72
972	104.85	5.2	16.5		157	72
973	104.79	5.2	16.99		157	72
974	104.76	5.2	15.78		158	72
975	104.88	5.2	15.8		156	72
976	104.40	5.2	15.31		155	72
977	104.73	5.19	15.08		152	72
978	104.73	4.93	14.38		154	72
979	104.43	4.89	14.29		151	72
980	104.84	4.46	13.16		155	72
981	104.84	4.59	13.51		152	72
982	104.78	4.16	12.36		152	72
983	104.59	4.25	12.62		152	72
984	104.77	3.86	11.61		149	72
985	105.23	3.89	11.67		147	72
986	104.67	3.53	10.78		149	72
987	105.03	3.43	10.51		145	72

988	104.59	3.3	10.12		146	72
989	107.75	3.31	10.12		145	72
990	103.67	0.24	1.67		143	72
991	103.97	0	0.46		141	72
992	103.93	0	0.25		141	72
993	104.81	2.78	7.95		142	72
994	105.43	2.85	8.54		140	72
995	103.83	0.02	0.52		140	72
996	103.72	0	0.26		140	72
997	103.94	0	0.14		139	72
998	103.88	0	0.08		138	72
999	104.93	0	0.05		140	72
1000	104.61	0	0.03		135	72
1001	104.55	2.27	6.73		136	72
1002	104.74	2.26	6.97		159	72
1003	104.38	4.54	13.49		152	72
1004	103.88	2.19	10.14		148	72
1005	103.60	2.19	10.3		146	72
1006	103.66	2.18	10.38		145	72
1007	103.70	2.01	9.65		142	72
1008	103.73	1.8	8.73		138	72
1009	103.69	1.66	8.05		138	72
1010	103.62	1.51	7.41		136	72
1011	104.00	1.45	7.08		136	72
1012	103.55	1.36	6.67		133	72
1013	103.80	1.32	6.43		133	72
1014	103.63	1.22	5.97		132	71
1015	103.82	1.17	5.72		130	72
1016	103.82	1.08	5.35		129	71
1017	103.87	1.02	5.02		127	71
1018	104.22	0.98	4.85		127	71
1019	104.35	0.95	4.7		126	71
1020	103.88	0.89	4.41		126	71
1021	104.21	0.86	4.23		125	71
1022	104.26	0.81	4.02		122	71
1023	103.99	0.79	3.91		125	72
1024	104.36	0.79	3.9		122	71
1025	103.87	0.74	3.69		120	71
1026	104.27	0.71	3.5		120	71
1027	104.07	0.72	3.57		120	71
1028	103.96	0.66	3.27		120	71
1029	104.30	0.65	3.23		119	71

1030	104.01	0.64	3.17		121	71
1031	104.27	0.62	3.08		118	71
1032	104.34	0.63	3.11		119	71
1033	104.15	0.57	2.84		147	71
1034	103.72	1.3	6.58		141	71
1035	103.90	1.49	8.56		137	71
1036	103.48	1.41	8.07		135	71
1037	104.25	1.35	7.76		132	71
1038	103.65	1.23	7.18		130	71
1039	104.05	1.1	6.45		128	71
1040	103.93	1.03	6.03		125	71
1041	103.76	0.94	5.52		124	71
1042	103.87	0.9	5.3		124	71
1043	104.10	0.78	4.65		121	71
1044	103.77	0.75	4.47		122	71
1045	103.84	0.69	4.11		119	71
1046	103.88	0.62	3.7		118	71
1047	103.63	0.56	3.34		118	71
1048	104.10	0.56	3.32		117	71
1049	104.01	0.51	3.05		115	71
1050	103.86	0.49	2.92		114	71
1051	103.70	0.47	2.81		114	71
1052	104.25	0.45	2.73		114	71
1053	104.17	0.46	2.78		114	71
1054	104.20	0.43	2.62		113	71
1055	104.26	0.42	2.59		113	71
1056	104.24	0.44	2.68		111	71
1057	104.34	0.42	2.59		110	71
1058	103.78	0.43	2.65		111	71
1059	103.98	0.44	2.74		111	71
1060	104.02	0.43	2.67		111	71
1061	103.89	0.44	2.8		110	71
1062	104.12	0.48	3.02		141	71
1063	104.02	1.53	8.06		182	71
1064	103.16	1.08	14.18		210	71
1065	102.03	0.11	16.69		232	71
1066	101.01	0.04	15.89		246	71
1067	99.71	0.04	15.81		254	71
1068	99.33	0.04	15.8		260	71
1069	98.05	0.05	15.88		265	71
1070	97.62	0.06	15.79		268	71
1071	96.87	0.07	15.78		271	71

1072	95.81	0.08	15.72		274	71
1073	95.39	0.09	15.82		276	71
1074	93.96	0.09	15.99		279	71
1075	92.91	0.09	16.1		282	71
1076	92.39	0.1	16.34		285	71
1077	91.64	0.1	16.29		288	71
1078	90.56	0.1	16.73		291	71
1079	89.20	0.11	17.26		295	71
1080	88.08	0.11	17.59		298	72
1081	86.95	0.09	17.07		298	72
1082	86.29	0.1	17.19		299	72
1083	85.02	0.1	17.03		300	72
1084	83.72	0.1	17.22		303	71
1085	82.35	0.11	17.58		302	72
1086	81.06	0.1	17.02		301	72
1087	79.94	0.1	17.37		293	71
1088	78.37	0.05	13.67		262	71
1089	78.21	0.02	15.44		247	72
1090	77.40	0.02	15.99		235	71
1091	76.99	0.02	15.55		229	71
1092	76.42	0.02	11.88		224	72
1093	76.30	2.46	20.78		219	72
1094	76.04	1.49	20.78		215	72
1095	75.83	0.74	20.78		212	72
1096	75.41	1	20.78		209	71
1097	75.35	0.65	20.78		207	72
1098	75.33	0.4	20.53		206	71
1099	74.97	3	20.78		205	71
1100	74.71	5.2	20.78		203	71
1101	74.66	5.2	20.78		201	72
1102	74.95	5.2	20.78		198	72
1103	74.86	5.2	20.78		196	71
1104	74.43	5.2	20.78		194	71
1105	74.21	5.2	20.78		191	71
1106	74.36	5.2	20.78		190	71
1107	74.05	5.2	20.78		188	71
1108	73.97	5.2	20.78		186	71
1109	73.93	5.2	20.78		184	71
1110	74.29	5.2	20.78		183	71
1111	73.84	5.2	20.78		181	71
1112	73.82	5.2	20.78		179	71
1113	73.71	5.2	20.78		177	71

1114	73.40	5.2	20.78		175	71
1115	73.78	5.2	20.78		176	71
1116	73.97	5.2	20.78		174	71
1117	73.60	5.2	20.78		173	71
1118	73.66	5.2	20.78		171	71
1119	73.60	5.2	20.78		169	71
1120	73.99	5.2	20.78		168	71
1121	73.79	5.2	20.78		167	71
1122	73.51	5.2	20.78		166	71
1123	73.56	5.2	20.78		166	71
1124	73.48	5.2	20.78		167	71
1125	73.60	5.2	20.78		162	71
1126	73.74	5.2	20.78		163	71
1127	73.51	5.2	20.78		161	71
1128	73.99	5.2	19.92		158	71
1129	73.47	5.2	19.37		157	71
1130	73.87	5.2	18.11		156	71
1131	73.47	5.2	17.13		157	71
1132	73.69	5.2	16.42		153	71
1133	73.35	5.2	15.44		153	71
1134	73.77	5.02	14.88		153	71
1135	73.42	4.86	14.4		154	71
1136	73.46	4.74	14.11		151	71
1137	74.30	4.24	12.83		151	71
1138	73.67	3.98	12.13		147	71
1139	73.78	3.86	11.85		145	71
1140	74.04	3.84	11.83		148	71
1141	73.43	3.53	11.08		147	72
1142	73.68	3.33	10.53		145	72
1143	73.80	3.32	10.55		143	72
1144	73.86	3.11	10.01		144	72
1145	73.34	2.95	9.57		143	72
1146	73.19	2.81	9.23		141	72
1147	73.82	2.74	9.09		141	72
1148	73.52	2.51	8.48		138	72
1149	73.73	2.48	8.41		135	72
1150	73.89	2.35	8.05		139	72
1151	73.52	2.21	7.64		136	72
1152	73.83	2.31	7.95		138	72
1153	73.77	2.12	7.43		134	72
1154	73.69	2.14	7.56		134	72
1155	73.80	2.03	7.25		132	72

1156	73.89	1.99	7.15		131	72
1157	73.72	2.02	7.28		134	72
1158	73.96	1.98	7.15		155	72
1159	73.53	3	10.98		150	72
1160	73.28	2.45	10.46		147	72
1161	72.84	2.47	10.72		143	72
1162	73.07	2.32	10.18		141	72
1163	73.34	2.08	9.35		139	72
1164	73.23	1.97	8.91		138	72
1165	72.85	1.91	8.65		136	72
1166	73.07	1.77	8.04		132	72
1167	73.17	1.57	7.31		133	72
1168	73.16	1.51	7.01		132	72
1169	73.50	1.45	6.73		128	72
1170	73.38	1.33	6.23		128	72
1171	73.28	1.23	5.82		128	72
1172	73.26	1.24	5.83		126	72
1173	73.23	1.16	5.49		126	72
1174	73.23	1.14	5.42		127	72
1175	73.29	1.13	5.36		125	73
1176	73.31	1.08	5.17		125	73
1177	73.31	1.03	4.94		123	73
1178	73.30	0.98	4.74		123	73
1179	73.42	0.94	4.57		120	73
1180	73.79	0.89	4.33		119	73
1181	72.92	0.83	4.1		120	73
1182	73.43	0.82	4.05		118	73
1183	73.31	0.79	3.94		120	73
1184	73.63	0.79	3.92		119	73
1185	73.27	0.77	3.88		119	73
1186	73.29	0.75	3.8		117	73
1187	73.27	0.71	3.64		117	73
1188	73.30	0.71	3.59		120	73
1189	73.22	0.75	3.75		143	73
1190	73.26	1.48	8.48		138	73
1191	73.23	1.49	8.34		135	73
1192	72.94	1.44	8.01		131	73
1193	72.74	1.32	7.4		130	73
1194	73.10	1.19	6.73		126	72
1195	73.13	1.09	6.18		126	73
1196	73.05	0.97	5.59		124	73
1197	72.94	0.95	5.47		122	72

1198	73.06	0.89	5.11		121	72
1199	73.09	0.79	4.57		120	72
1200	72.89	0.73	4.25		119	72
1201	73.08	0.69	4.03		119	72
1202	73.17	0.64	3.71		117	72
1203	72.86	0.58	3.4		116	72
1204	72.76	0.54	3.18		115	72
1205	73.01	0.5	2.93		114	72
1206	73.53	0.48	2.82		114	72
1207	73.47	0.45	2.64		113	72
1208	72.48	0.42	2.45		112	72
1209	73.38	0.4	2.32		112	72
1210	72.94	0.38	2.24		113	72
1211	72.80	0.35	2.05		110	72
1212	73.13	0.34	2.03		111	72
1213	72.90	0.33	1.93		110	72
1214	73.25	0.31	1.83		109	72
1215	72.93	0.3	1.78		108	72
1216	73.15	0.3	1.77		109	72
1217	72.81	0.29	1.75		107	72
1218	73.09	0.27	1.64		107	72
1219	73.16	0.27	1.63		129	72
1220	73.25	0.32	1.88		138	72
1221	72.94	1.34	7.5		141	72
1222	72.95	1.33	7.6		184	72
1223	71.91	1.75	13.5		213	72
1224	70.70	0.3	16.39		235	72
1225	69.40	0.06	16.19		248	72
1226	68.74	0.05	15.94		256	72
1227	67.84	0.05	15.78		261	72
1228	66.90	0.06	15.71		265	72
1229	66.64	0.07	15.77		269	72
1230	65.08	0.07	15.92		273	72
1231	64.69	0.07	15.96		275	72
1232	63.52	0.08	15.98		277	72
1233	62.96	0.08	16		279	72
1234	62.11	0.08	15.96		283	72
1235	61.12	0.08	16.31		284	72
1236	60.56	0.08	16.2		287	72
1237	59.09	0.08	16.25		289	72
1238	58.30	0.08	16.29		291	72
1239	57.41	0.08	16.31		293	72

1240	56.61	0.08	16.53		296	72
1241	55.27	0.08	16.79		298	72
1242	54.24	0.08	16.9		300	72
1243	53.81	0.08	17.06		302	72
1244	51.99	0.09	17.03		303	72
1245	51.09	0.09	17.1		275	72
1246	50.37	0.05	11.19		252	72
1247	49.55	0.01	11.86		238	72
1248	49.19	0.01	12.12		229	72
1249	48.94	0.01	11.44		225	73
1250	48.54	0.04	9.31		221	73
1251	48.28	0.39	16.87		217	73
1252	48.29	0.27	16.78		213	73
1253	47.94	0.19	15.76		210	73
1254	48.18	0.28	16.02		207	73
1255	47.66	0.21	15.13		207	73
1256	47.91	0.16	14.12		206	73
1257	47.48	1.12	14.93		204	73
1258	47.63	3.15	18.06		201	73
1259	47.47	4.76	20.51		199	73
1260	47.47	5.2	20.78		196	73
1261	47.40	5.2	20.78		194	73
1262	47.47	5.2	20.78		191	73
1263	47.34	5.2	20.78		189	73
1264	47.56	5.2	20.78		187	73
1265	47.23	5.2	20.78		185	73
1266	47.31	5.2	20.78		182	73
1267	47.40	5.2	20.78		180	73
1268	47.40	5.2	20.78		178	73
1269	47.12	5.2	20.78		176	73
1270	47.21	5.2	20.78		175	73
1271	46.98	5.2	20.78		172	73
1272	47.32	5.2	20.78		171	73
1273	47.21	5.2	20.78		169	73
1274	46.51	5.2	20.78		166	72
1275	45.91	5.2	20.77		165	73
1276	46.50	3.45	13.98		163	72
1277	46.63	3.88	13.89		161	72
1278	46.46	5.2	18.59		160	72
1279	46.44	5.2	18.73		158	72
1280	46.40	5.07	17.96		157	72
1281	46.43	4.57	16.4		156	72

1282	46.38	4.66	16.62		155	72
1283	46.31	4.18	15.24		153	72
1284	46.45	4.22	15.33		153	72
1285	46.81	4.13	15.11		151	72
1286	46.59	4.09	15.03		151	72
1287	46.96	3.92	14.56		150	72
1288	47.00	3.62	13.63		148	72
1289	46.14	3.59	13.6		148	72
1290	46.66	3.55	13.44		146	72
1291	46.76	3.38	12.95		144	72
1292	46.45	3.14	12.16		145	72
1293	46.66	3.14	12.18		144	72
1294	46.87	2.98	11.71		144	72
1295	46.70	2.93	11.55		142	72
1296	46.50	2.95	11.65		140	72
1297	46.44	2.73	10.98		139	72
1298	46.27	2.67	10.82		139	72
1299	46.43	2.6	10.6		138	72
1300	46.66	2.47	10.15		136	72
1301	46.44	2.42	10.05		136	72
1302	46.40	2.39	9.96		136	72
1303	46.60	2.25	9.45		133	72
1304	46.92	2.15	9.09		132	72
1305	46.64	2.12	9.05		131	72
1306	46.67	2.04	8.82		130	72
1307	46.88	1.94	8.45		130	72
1308	46.83	2.01	8.73		130	72
1309	46.89	2	8.71		130	72
1310	46.95	1.86	8.2		127	72
1311	47.01	1.87	8.26		127	72
1312	46.96	1.8	8.01		126	72
1313	46.93	1.75	7.81		125	72
1314	46.95	1.74	7.79		127	72
1315	46.93	1.74	7.82		152	72
1316	47.01	3.21	11.87		153	72
1317	46.78	2.02	10.56		147	72
1318	46.53	1.89	10.12		142	72
1319	46.98	1.83	9.88		138	72
1320	46.53	1.63	8.98		136	72
1321	46.59	1.51	8.43		134	72
1322	46.70	1.43	8.1		132	72
1323	47.06	1.34	7.61		131	72

1324	46.80	1.22	7.07		128	72
1325	46.40	1.14	6.62		126	72
1326	46.65	1.02	5.98		126	72
1327	46.70	1	5.85		125	72
1328	46.65	0.96	5.66		123	72
1329	46.54	0.92	5.46		124	72
1330	47.15	0.86	5.14		121	72
1331	46.87	0.85	5.11		120	72
1332	46.87	0.8	4.86		120	72
1333	46.57	0.83	4.96		120	72
1334	46.84	0.83	4.98		119	72
1335	46.92	0.79	4.82		118	72
1336	46.99	0.78	4.77		118	72
1337	46.83	0.79	4.84		118	72
1338	46.91	0.78	4.78		117	71
1339	47.08	0.75	4.65		116	71
1340	46.79	0.75	4.65		117	71
1341	46.83	0.75	4.69		115	72
1342	46.83	0.73	4.56		116	71
1343	46.96	0.74	4.63		114	71
1344	47.22	0.72	4.56		115	71
1345	46.93	0.71	4.49		115	71
1346	46.78	0.7	4.4		140	71
1347	46.49	1.24	6.99		140	71
1348	47.05	1.2	7.81		133	71
1349	47.03	1.11	7.31		129	71
1350	46.91	1.01	6.71		126	71
1351	46.96	0.94	6.33		123	71
1352	47.06	0.85	5.79		121	71
1353	47.14	0.79	5.41		120	71
1354	46.99	0.72	5.02		118	71
1355	46.56	0.65	4.59		117	71
1356	47.08	0.61	4.32		116	71
1357	46.89	0.57	4.03		116	71
1358	47.16	0.51	3.69		114	71
1359	46.89	0.49	3.51		114	71
1360	46.96	0.45	3.25		112	71
1361	47.05	0.41	3		111	71
1362	46.96	0.39	2.85		111	71
1363	46.87	0.36	2.65		110	71
1364	47.14	0.34	2.53		109	71
1365	46.92	0.33	2.41		109	71

1366	46.97	0.3	2.28		121	71
1367	46.97	0.37	2.68		161	71
1368	46.53	1.33	8.07		189	71
1369	46.16	2.72	11.09		215	71
1370	45.35	0.52	16.53		237	71
1371	44.20	0.1	16.32		249	71
1372	43.58	0.08	15.92		257	71
1373	42.39	0.08	15.75		262	71
1374	41.80	0.08	15.81		266	71
1375	41.03	0.09	15.87		270	71
1376	40.31	0.09	15.94		271	71
1377	39.35	0.1	15.78		273	71
1378	38.72	0.11	15.82		275	71
1379	37.63	0.11	15.8		278	71
1380	37.47	0.11	15.93		280	71
1381	36.31	0.11	15.9		282	71
1382	35.51	0.11	15.78		283	71
1383	34.76	0.11	15.85		285	71
1384	33.86	0.11	15.91		287	70
1385	32.99	0.11	16.1		289	70
1386	32.12	0.1	16.25		292	70
1387	31.08	0.1	16.32		294	71
1388	30.16	0.11	16.54		296	71
1389	29.06	0.1	16.44		298	71
1390	27.85	0.11	16.54		299	71
1391	27.07	0.11	16.43		301	71
1392	26.05	0.1	16.44		292	71
1393	25.37	0.12	15.47		261	71
1394	24.96	0.02	11.23		244	71
1395	24.11	0.01	11.46		233	71
1396	23.75	0.01	12.05		226	71
1397	23.17	0.02	10.34		223	71
1398	23.54	0.58	15.21		219	70
1399	23.02	0.74	16.97		215	70
1400	22.90	0.5	16.3		212	71
1401	22.48	0.6	16.73		209	71
1402	22.62	0.5	16.43		207	70
1403	22.46	0.38	15.68		206	71
1404	22.44	0.79	15.56		205	70
1405	22.07	3.14	17.97		203	71
1406	22.13	5.2	20.78		200	70
1407	22.05	5.2	20.78		198	70

1408	21.91	5.2	20.78		195	70
1409	21.65	5.2	20.78		193	70
1410	22.00	5.2	20.78		190	70
1411	22.09	5.2	20.78		188	70
1412	22.01	5.2	20.78		186	70
1413	22.04	5.2	20.78		184	70
1414	21.70	5.2	20.78		182	70
1415	21.65	5.2	20.78		179	70
1416	21.70	5.2	20.78		177	70
1417	21.75	5.2	20.78		176	70
1418	21.45	5.2	20.78		174	70
1419	21.95	5.2	20.78		171	70
1420	21.74	5.2	20.78		170	70
1421	21.72	5.2	20.78		169	70
1422	21.58	5.2	20.78		166	70
1423	21.70	5.2	20.78		164	70
1424	21.58	5.2	20.78		164	70
1425	21.62	5.2	20.78		163	70
1426	21.20	5.2	0.05		160	70
1427	20.95	5.2	0.02		157	70
1428	20.90	2.48	6.97		157	70
1429	21.30	0.16	0.68		156	70
1430	20.93	5.2	17.7		154	70
1431	21.12	5.2	17.04		152	70
1432	20.46	5.17	15.63		152	70
1433	20.93	4.77	15.01		150	70
1434	20.64	4.7	14.14		148	70
1435	20.89	4.38	12.92		147	70
1436	20.94	4.05	12.18		146	70
1437	21.22	3.86	11.7		145	70
1438	21.41	4	12.21		143	70
1439	21.26	3.88	11.92		144	70
1440	21.18	3.67	11.48		142	70
1441	21.64	3.48	11		141	70
1442	21.24	3.48	11.04		140	70
1443	21.25	3.31	10.58		137	70
1444	21.30	3.22	10.38		136	70
1445	21.11	3.14	10.25		136	70
1446	21.62	2.93	9.7		136	70
1447	21.34	2.85	9.48		133	70
1448	21.15	2.69	9.08		133	70
1449	21.20	2.6	8.83		132	70

1450	21.46	2.7	9.22		131	70
1451	21.16	2.58	8.91		133	70
1452	21.62	2.66	9.24		130	70
1453	21.64	2.61	9.14		130	70
1454	21.36	2.47	8.75		130	70
1455	21.63	2.3	8.2		128	70
1456	21.21	2.23	8		127	70
1457	21.63	2.25	8.12		126	70
1458	21.45	2.22	8.05		125	70
1459	21.69	2.08	7.6		126	69
1460	21.12	2.16	7.91		126	70
1461	21.70	2	7.5		124	70
1462	21.60	2	7.46		125	70
1463	21.61	4.56	14.23		153	70
1464	21.58	1.77	8.76		146	69
1465	21.81	1.67	8.3		140	69
1466	21.60	1.49	7.53		136	70
1467	21.32	1.37	6.96		133	70
1468	21.70	1.18	6.08		130	69
1469	21.20	1.12	5.78		128	69
1470	21.90	0.99	5.14		127	69
1471	21.57	0.88	4.58		123	69
1472	21.43	0.8	4.19		123	69
1473	21.33	0.72	3.77		121	69
1474	21.72	0.64	3.35		121	70
1475	21.51	0.64	3.3		119	69
1476	21.95	0.54	2.81		118	69
1477	21.73	0.51	2.67		118	69
1478	21.73	0.47	2.48		116	69
1479	21.63	0.42	2.24		116	69
1480	21.59	0.4	2.1		115	69
1481	21.91	0.4	2.12		114	69
1482	21.56	0.39	2.08		113	69
1483	21.95	0.42	2.23		113	69
1484	21.55	0.44	2.42		113	69
1485	21.93	0.48	2.66		113	69
1486	21.91	0.51	2.85		113	69
1487	21.59	0.54	3.05		112	69
1488	21.55	0.58	3.31		113	69
1489	21.72	0.56	3.22		110	69
1490	21.81	0.58	3.38		111	69
1491	21.65	0.58	3.4		110	69

1492	21.89	0.62	3.62		110	69
1493	21.95	0.61	3.62		120	69
1494	21.83	1.22	6.88		145	69
1495	21.55	0.99	6.72		134	69
1496	22.05	0.92	6.28		128	69
1497	21.92	0.81	5.58		124	69
1498	21.90	0.74	5.12		121	69
1499	21.77	0.66	4.64		118	69
1500	22.00	0.6	4.21		117	69
1501	21.93	0.55	3.88		115	69
1502	21.82	0.49	3.47		114	69
1503	21.86	0.45	3.16		113	69
1504	21.58	0.41	2.89		112	69
1505	22.12	0.36	2.59		111	69
1506	21.99	0.35	2.5		110	69
1507	22.08	0.32	2.28		109	69
1508	22.03	0.3	2.18		117	69
1509	21.82	0.76	6.58		160	69
1510	21.60	2	8.5		185	69
1511	21.40	1.86	12		210	69
1512	19.65	0.53	16.37		233	69
1513	18.53	0.1	15.64		246	69
1514	18.10	0.1	15		253	69
1515	18.33	0.09	15.15		258	69
1516	17.55	0.1	15.27		262	69
1517	16.76	0.1	15.48		266	69
1518	15.50	0.11	15.59		269	69
1519	14.47	0.11	15.54		271	69
1520	13.98	0.1	15.34		273	69
1521	13.43	0.11	15.63		276	69
1522	12.67	0.11	15.74		278	69
1523	11.69	0.11	15.57		280	69
1524	11.51	0.12	15.5		281	69
1525	10.61	0.12	15.35		282	69
1526	9.44	0.11	15.41		283	69
1527	9.40	0.12	15.39		284	69
1528	7.99	0.12	15.32		285	69
1529	7.74	0.12	15.48		287	69
1530	6.75	0.13	15.55		288	69
1531	6.36	0.13	15.59		290	69
1532	5.08	0.13	15.52		291	69
1533	4.18	0.13	15.42		292	69

1534	3.77	0.13	15.37		293	69
1535	3.11	0.13	15.44		294	69
1536	2.41	0.12	15.38		294	69
1537	1.23	0.12	15.57		297	69
1538	0.00	0.12	15.57		285	69

OMNI-Test Laboratories, Inc. **ASTM E2780 Wood Heater Run Sheets**

Client: Central Boiler Woodmaster Project Number: 0117WB041E Run Number: 4
Model: Edge 960 Clean Fire 900 Tracking Number: 2430 Date: 12/21/2020
Test Crew: Bruce Davis, Tony Tong
OMNI Equipment ID numbers:

Wood Heater Run Notes

Air Control Settings

Primary:

Automatic
Demand Temp 165 - 185° F

Secondary: fixed

Tertiary/Pilot: N/A

Fan: Automatic

Preburn Notes

Time	Notes
Ø	AT Heat draw for CAT II entire test.

Test Notes

Sketch test fuel configuration:

See photo

Start up procedures & Timeline:

Bypass: N/A
Fuel loaded by: 3.75
Door closed at: 4:00
Primary air: Automatic

Notes:

Time	Notes
~~12/22/20 8:60~~	First hour filters change
12/22/20 8:40	Gas analyzer calibration

Technician Signature: _____ Date: 12/21/20

ASTM E2780 Wood Heater Run Sheets

Client: Central Boiler Project Number: 0117WB041E Run Number: 4
Model: Edge 960 Tracking Number: 2430 Date: 12/21/2020
Test Crew: Bruce Davis, Tony Tong
OMNI Equipment ID numbers:

Wood Heater Supplemental Data

Start Time: 18:58 12/21 Booth #: 3
Stop Time: 2036 12/22

Stack Gas Leak Check:
Initial: good Final: good

Sample Train Leak Check:
A: 0.0 @ 6 "Hg
B: 0.0 @ 10 "Hg

Calibrations: Span Gas CO_2: 16.94 CO: 4.32

	Pre Test		Post Test	
	Zero	Span	Zero	Span
Time	18:10	18:10	20:48	20:49
CO_2	~~16.90~~ 0.00	16.90	0.05	17.07
CO	~~4.31~~ 0.00	4.31	~~0.05~~ -0.03	4.409

Air Velocity (ft/min): Initial: 250 Final: 250
Scale Audit (lbs): Initial: 10.0 Final: 10.0
Pitot Tube Leak Test: Initial: good Final: good
Stack Diameter (in): 8"
Induced Draft: 0.0
% Smoke Capture: 100%
Flue Pipe Cleaned Prior to First Test in Series:
Date: 12/ Initials: 12/8/20

	Initial	Middle	Ending
P_b (in/Hg)	29.78	30.43	30.42
RH (%)			
Ambient (°F)	72	72	69

Tunnel Traverse

Microtector Reading	dP (in H_2O)	T(°F)
1	0.048	76
2	0.052	76
3	0.064	76
4	0.062	76
5	0.050	76
6	0.050	76
1	0.060	77
2	0.048	77
3	0.056	77
4	0.062	77
5	0.060	77
6	0.052	77
Center:		
	0.044	76

Background Filter Volume: 477.490

Tunnel Static Pressure (in H_2O):	
Beginning of Test	End of Test
-0.514	-0.514

Technician Signature: Date: 12/21

Run 4
Proportional Rate verification

Test data was edited by changing recording interval from 1 minute to 10 minutes. This was done to demonstrate maximum data points outside of the 90 to 110 percent proportionate rate specification.

Hydronic Heating Appliances - Test Method ASTM 2618
Test Data

Run: 4

Manufacturer: Central Boiler, Wood Master
Model: Edge 960, CleanFire 900
Tracking No.: 2430
Project No.: 0117WB041E
Test Date: December 21, 2020
Technician: B Davis
Beginning Clock Time: 18:58
Recording Interval: 10 min.
Total Sampling Time: 1538 min.

Velocity Traverse Data

	Pt.1	Pt.2	Pt.3	Pt.4	Pt.5	Pt.6	Pt.7	Pt.8	Pt.9	Pt.10	Pt.11	Pt.12	Center	
Initial dP	0.048	0.052	0.064	0.062	0.050	0.052	0.040	0.048	0.056	0.062	0.060	0.052	0.044	"H2O
Initial Temp.	76	76	76	76	76	76	77	77	77	77	77	77	76	oF

Air Velocity: Initial: <50 Final: <50 V_{strav} 15.51 ft/sec
Scale Audit: Pre: 10.0 Post: 10.0 Induced Draft: 0 V_{scent} 14.05 ft/sec
Pitot Tube Leak Test: Pre: 0 Post: 0 % Smoke Capture: 100 F_p 1.104
Flue Pipe Cleaned Prior to First Test in Series: Date:

PM Control Module: 371, 372
Dilution Tunnel MW(dry): 29.00 lb/lb-mole
Dilution Tunnel MW(wet): 28.78 lb/lb-mole
Dilution Tunnel H2O: 2.00 percent
Dilution Tunnel Static: -0.514 "H2O
Pitot Tube Cp: 0.99

	(1)	(2)	(amb)
Meter Box Y Factor:	1.013	0.997	0.97

Barometric Pressure:	Begin	Middle	End	Average
	29.78	30.43	30.42	30.21 "Hg

Tunnel Velocity: 15.39 ft/sec.
Intial Tunnel Flow: 705.6 scfm
Average Tunnel Flow: 698.9 scfm
Tunnel Area: 0.785 ft2
Post-Test Leak Check (1): 0.000 cfm @ in. Hg
Post-Test Leak Check (2): 0.000 cfm @ in. Hg
Fuel Moisture (dry basis %): #DIV/0!
Total Particulate (1): 0.0
Total Particulate (2): 0.0

Elapsed Time	Particulate Sampling Data																Fuel Weight, lb		Flow, gpm		Temperature Data, oF									Stack			
	Gas Meter Cubic Feet (1)	Gas Meter Cubic Feet (2)	Gas Meter Cubic Feet (amb)	Sample Rate, cfm (1)	Sample Rate, cfm (2)	Orifice dH (1)	Orifice dH (2)	Orifice dH (amb)	Meter oF (1)	Meter oF (2)	Meter oF (amb)	Meter Vac. In. Hg. (1)	Meter Vac. In. Hg. (2)	Dilution Tunnel Temp.	Dilution Tunnel dP	Pro. Rate (%) (1)	Pro. Rate (%) (2)	Scale Reading	Weight Change	Load Side Liquid Flow Rate	Boiler Side Liquid Flow Rate (optional)	Thermopile ΔT	Boiler to Heat Exch. Temp.	Heat Exch to Boiler Temp.	Inlet Load Temp.	Outlet Load Temp.	Stack	Filter (1)	Filter (2)	Ambient		Specific Heat of Inlet Water (BTU/lb-°F)	Mass Flow Rate of Inlet Water (lb/min)	Heat Output, Btu
0	0.000	0.000				0.01	1.08		77	77		0.26	1.6	102	0.043				0.00														
10	1.563	1.579		0.16	0.16	1.30	0.98		77	77		2.78	1.6	110	0.044	101	102		0.00												1.001	0.000	0
20	3.142	3.109		0.16	0.15	1.31	1.01		78	78		2.86	1.7	113	0.043	103	100		0.00												1.001	0.000	0
30	4.727	4.656		0.16	0.15	1.28	0.98		79	80		2.92	1.8	86	0.045	99	97		0.00												1.001	0.000	0
40	6.322	6.212		0.16	0.16	1.30	1.00		80	81		2.86	1.7	77	0.040	104	102		0.00												1.001	0.000	0
50	7.931	7.797		0.16	0.16	1.32	1.05		81	82		2.81	1.6	76	0.044	100	99		0.00												1.001	0.000	0
60	9.556	9.408		0.16	0.16	1.34	1.05		82	83		2.76	1.6	76	0.044	101	100		0.00												1.001	0.000	0
70	11.185	11.022		0.16	0.16	1.35	1.06		83	83		2.76	1.6	75	0.047	97	97		0.00												1.001	0.000	0
80	12.815	12.639		0.16	0.16	1.35	1.06		83	83		2.77	1.6	75	0.041	104	104		0.00												1.001	0.000	0
90	14.447	14.256		0.16	0.16	1.34	1.07		83	84		2.77	1.6	75	0.045	100	99		0.00												1.001	0.000	0
100	16.079	15.875		0.16	0.16	1.35	1.06		83	84		2.78	1.6	75	0.043	102	102		0.00												1.001	0.000	0
110	17.712	17.493		0.16	0.16	1.35	1.06		83	84		2.78	1.6	74	0.042	103	103		0.00												1.001	0.000	0
120	19.346	19.113		0.16	0.16	1.35	1.07		83	84		2.78	1.6	74	0.044	101	100		0.00												1.001	0.000	0
130	20.981	20.732		0.16	0.16	1.36	1.07		83	84		2.78	1.6	75	0.045	100	99		0.00												1.001	0.000	0
140	22.602	22.351		0.16	0.16	1.24	0.99		83	83		2.65	1.5	74	0.043	101	102		0.00												1.001	0.000	0
150	24.206	23.917		0.16	0.16	1.31	0.99		83	83		2.73	1.5	74	0.040	104	102		0.00												1.001	0.000	0
160	25.802	25.472		0.16	0.16	1.30	0.97		83	83		2.77	1.6	110	0.041	106	103		0.00												1.001	0.000	0
170	27.381	27.012		0.16	0.15	1.28	1.01		83	83		2.84	1.7	113	0.044	101	99		0.00												1.001	0.000	0
180	28.950	28.562		0.16	0.16	1.25	0.96		83	83		2.92	1.8	118	0.043	102	101		0.00												1.001	0.000	0
190	30.559	30.095		0.16	0.15	1.29	0.97		83	83		2.85	1.8	77	0.042	102	98		0.00												1.001	0.000	0
200	32.161	31.647		0.16	0.16	1.31	1.01		83	83		2.81	1.7	75	0.041	103	100		0.00												1.001	0.000	0
210	33.774	33.248		0.16	0.16	1.33	1.06		83	83		2.76	1.6	74	0.045	99	98		0.00												1.001	0.000	0
220	35.391	34.863		0.16	0.16	1.33	1.06		83	83		2.75	1.5	74	0.045	99	99		0.00												1.001	0.000	0
230	37.008	36.478		0.16	0.16	1.33	1.06		83	83		2.76	1.6	73	0.044	100	100		0.00												1.001	0.000	0
240	38.626	38.092		0.16	0.16	1.32	1.06		83	83		2.75	1.6	74	0.047	97	97		0.00												1.001	0.000	0
250	40.243	39.708		0.16	0.16	1.33	1.06		83	83		2.75	1.6	73	0.045	99	99		0.00												1.001	0.000	0
260	41.861	41.322		0.16	0.16	1.33	1.06		83	83		2.75	1.6	73	0.045	99	99		0.00												1.001	0.000	0
270	43.479	42.937		0.16	0.16	1.33	1.06		83	83		2.75	1.6	73	0.042	102	103		0.00												1.001	0.000	0
280	45.097	44.553		0.16	0.16	1.33	1.06		83	82		2.75	1.6	73	0.042	102	103		0.00												1.001	0.000	0
290	46.716	46.169		0.16	0.16	1.33	1.06		83	82		2.76	1.6	73	0.041	104	104		0.00												1.001	0.000	0
300	48.327	47.780		0.16	0.16	1.33	1.05		83	82		2.78	1.6	99	0.043	103	104		0.00												1.001	0.000	0
310	49.924	49.371		0.16	0.16	1.31	1.03		82	82		2.85	1.7	115	0.041	106	106		0.00												1.001	0.000	0
320	51.501	50.933		0.16	0.16	1.28	0.98		82	82		2.92	1.8	116	0.045	100	100		0.00												1.001	0.000	0
330	53.118	52.492		0.16	0.16	1.34	1.01		82	82		2.98	1.8	79	0.047	97	94		0.00												1.001	0.000	0
340	54.732	54.077		0.16	0.16	1.33	1.03		82	82		2.88	1.8	74	0.044	100	99		0.00												1.001	0.000	0
350	56.360	55.689		0.16	0.16	1.35	1.08		82	82		2.82	1.6	73	0.045	100	99		0.00												1.001	0.000	0
360	57.952	57.294		0.16	0.16	1.29	1.01		82	82		2.71	1.5	73	0.045	97	99		0.00												1.001	0.000	0
370	59.540	58.865		0.16	0.16	1.29	1.01		82	82		2.71	1.5	73	0.044	98	98		0.00												1.001	0.000	0
380	61.129	60.437		0.16	0.16	1.29	1.01		82	82		2.71	1.5	72	0.043	99	99		0.00												1.001	0.000	0
390	62.718	62.008		0.16	0.16	1.29	1.01		82	82		2.71	1.5	72	0.042	100	100		0.00												1.001	0.000	0
400	64.306	63.579		0.16	0.16	1.28	1.01		82	82		2.7	1.5	72	0.041	102	101		0.00												1.001	0.000	0
410	65.895	65.151		0.16	0.16	1.29	1.01		82	82		2.7	1.5	72	0.044	98	98		0.00												1.001	0.000	0
420	67.485	66.723		0.16	0.16	1.29	1.01		82	82		2.7	1.5	72	0.043	99	99		0.00												1.001	0.000	0
430	69.073	68.295		0.16	0.16	1.29	1.01		82	82		2.71	1.5	72	0.045	97	96		0.00												1.001	0.000	0
440	70.661	69.867		0.16	0.16	1.29	1.01		82	82		2.7	1.5	72	0.046	96	95		0.00												1.001	0.000	0
450	72.249	71.441		0.16	0.16	1.29	1.01		82	82		2.71	1.5	72	0.044	98	98		0.00												1.001	0.000	0
460	73.828	73.002		0.16	0.16	1.29	0.99		82	82		2.74	1.5	104	0.042	103	102		0.00												1.001	0.000	0
470	75.392	74.542		0.16	0.15	1.26	0.97		81	82		2.8	1.6	115	0.043	102	101		0.00												1.001	0.000	0
480	76.979	76.077		0.16	0.15	1.33	0.98		82	82		2.97	1.8	102	0.043	102	99		0.00												1.001	0.000	0
490	78.561	77.626		0.16	0.15	1.29	0.99		81	82		2.83	1.7	75	0.041	102	100		0.00												1.001	0.000	0

Elapsed Time	Particulate Sampling Data																	Fuel Weight, lb		Flow, gpm		Temperature Data, oF									Stack			
	Gas Meter Cubic Feet (1)	Gas Meter Cubic Feet (2)	Gas Meter Cubic Feet (amb)	Sample Rate, cfm (1)	Sample Rate, cfm (2)	Orifice dH (1)	Orifice dH (2)	Orifice dH (amb)	Meter oF (1)	Meter oF (2)	Meter oF (amb)	Meter Vac. In. Hg. (1)	Meter Vac. In. Hg. (2)	Dilution Tunnel Temp.	Dilution Tunnel dP	Pro. Rate (%) (1)	Pro. Rate (%) (2)	Scale Reading	Weight Change	Load Side Liquid Flow Rate	Boiler Side Liquid Flow Rate (optional)	Thermopile ΔT	Boiler to Heat Exch. Temp.	Heat Exch to Boiler Temp.	Inlet Load Temp.	Outlet Load Temp.	Stack	Filter (1)	Filter (2)	Ambient		Specific Heat of Inlet Water (BTU/lb-°F)	Mass Flow Rate of Inlet Water (lb/min)	Heat Output, Btu
500	80.152	79.193		0.16	0.16	1.30	1.02		81	82		2.78	1.6	73	0.043	100	98		0.00													1.001	0.000	0
510	81.754	80.783		0.16	0.16	1.31	1.05		81	82		2.75	1.6	72	0.046	97	97		0.00													1.001	0.000	0
520	83.359	82.392		0.16	0.16	1.32	1.06		81	82		2.75	1.5	72	0.043	100	101		0.00													1.001	0.000	0
530	84.962	84.002		0.16	0.16	1.32	1.06		81	82		2.74	1.6	72	0.042	102	102		0.00													1.001	0.000	0
540	86.567	85.613		0.16	0.16	1.32	1.06		81	81		2.74	1.6	72	0.046	97	98		0.00													1.001	0.000	0
550	88.170	87.223		0.16	0.16	1.31	1.06		81	81		2.71	1.5	72	0.043	100	101		0.00													1.001	0.000	0
560	89.775	88.831		0.16	0.16	1.32	1.06		81	81		2.71	1.6	72	0.045	98	99		0.00													1.001	0.000	0
570	91.379	90.441		0.16	0.16	1.31	1.06		81	81		2.69	1.5	72	0.046	97	98		0.00													1.001	0.000	0
580	92.983	92.051		0.16	0.16	1.31	1.06		81	81		2.69	1.5	72	0.044	99	100		0.00													1.001	0.000	0
590	94.587	93.661		0.16	0.16	1.32	1.06		81	81		2.7	1.6	72	0.043	100	101		0.00													1.001	0.000	0
600	96.192	95.271		0.16	0.16	1.31	1.06		81	81		2.7	1.6	72	0.041	103	104		0.00													1.001	0.000	0
610	97.793	96.882		0.16	0.16	1.31	1.05		81	81		2.72	1.6	79	0.043	101	102		0.00													1.001	0.000	0
620	99.387	98.478		0.16	0.16	1.31	1.05		81	81		2.73	1.6	108	0.041	106	106		0.00													1.001	0.000	0
630	100.967	100.058		0.16	0.16	1.29	1.02		81	81		2.81	1.7	111	0.040	106	107		0.00													1.001	0.000	0
640	102.544	101.610		0.16	0.16	1.26	0.98		81	81		2.87	1.7	84	0.043	100	99		0.00													1.001	0.000	0
650	104.129	103.167		0.16	0.16	1.28	1.01		81	81		2.77	1.7	73	0.044	98	97		0.00													1.001	0.000	0
660	105.719	104.744		0.16	0.16	1.29	1.03		81	81		2.72	1.6	73	0.041	102	102		0.00													1.001	0.000	0
670	107.317	106.344		0.16	0.16	1.31	1.06		81	81		2.69	1.5	72	0.043	100	101		0.00													1.001	0.000	0
680	108.914	107.941		0.16	0.16	1.31	1.02		81	81		2.69	1.5	72	0.041	102	103		0.00													1.001	0.000	0
690	110.510	109.520		0.16	0.16	1.31	1.02		81	81		2.68	1.5	71	0.045	98	97		0.00													1.001	0.000	0
700	112.109	111.100		0.16	0.16	1.31	1.02		81	81		2.69	1.5	71	0.044	99	98		0.00													1.001	0.000	0
710	113.706	112.677		0.16	0.16	1.32	1.03		81	81		2.68	1.5	71	0.043	100	99		0.00													1.001	0.000	0
720	115.306	114.257		0.16	0.16	1.31	1.03		81	81		2.66	1.5	71	0.045	98	97		0.00													1.001	0.000	0
730	116.903	115.838		0.16	0.16	1.32	1.02		81	81		2.65	1.5	71	0.048	95	94		0.00													1.001	0.000	0
740	118.502	117.418		0.16	0.16	1.31	1.03		81	81		2.65	1.5	70	0.046	97	96		0.00													1.001	0.000	0
750	120.098	118.999		0.16	0.16	1.31	1.03		81	81		2.64	1.5	70	0.040	103	103		0.00													1.001	0.000	0
760	121.687	120.569		0.16	0.16	1.31	1.02		81	81		2.69	1.6	110	0.041	105	105		0.00													1.001	0.000	0
770	123.270	122.133		0.16	0.16	1.28	1.03		81	81		2.75	1.7	117	0.045	101	100		0.00													1.001	0.000	0
780	124.870	123.727		0.16	0.16	1.32	1.06		82	82		2.84	1.8	88	0.042	103	103		0.00													1.001	0.000	0
790	126.478	125.333		0.16	0.16	1.33	1.08		83	83		2.85	1.7	84	0.044	100	101		0.00													1.001	0.000	0
800	128.088	126.958		0.16	0.16	1.32	1.05		84	84		2.74	1.6	85	0.043	101	103		0.00													1.001	0.000	0
810	129.855	128.560		0.18	0.16	1.32	1.05		85	85		2.78	1.6	85	0.045	109	99		0.00													1.001	0.000	0
820	131.302	130.162		0.14	0.16	1.32	1.05		85	86		2.8	1.6	86	0.045	89	99		0.00													1.001	0.000	0
830	132.910	131.763		0.16	0.16	1.31	1.05		86	86		2.79	1.6	87	0.043	101	101		0.00													1.001	0.000	0
840	134.517	133.364		0.16	0.16	1.31	1.05		87	87		2.77	1.6	84	0.045	98	98		0.00													1.001	0.000	0
850	136.129	134.967		0.16	0.16	1.32	1.05		88	88		2.75	1.6	79	0.047	96	96		0.00													1.001	0.000	0
860	137.744	136.575		0.16	0.16	1.33	1.06		88	88		2.76	1.6	75	0.046	97	97		0.00													1.001	0.000	0
870	139.362	138.185		0.16	0.16	1.33	1.06		87	88		2.75	1.6	73	0.045	98	98		0.00													1.001	0.000	0
880	140.980	139.798		0.16	0.16	1.33	1.07		87	87		2.76	1.6	72	0.043	100	100		0.00													1.001	0.000	0
890	142.599	141.413		0.16	0.16	1.34	1.06		86	86		2.77	1.6	74	0.044	99	100		0.00													1.001	0.000	0
900	144.218	143.027		0.16	0.16	1.34	1.06		85	85		2.76	1.6	74	0.046	97	98		0.00													1.001	0.000	0
910	145.831	144.639		0.16	0.16	1.34	1.07		85	85		2.79	1.6	95	0.043	102	103		0.00													1.001	0.000	0
920	147.440	146.244		0.16	0.16	1.34	1.07		85	85		2.82	1.6	111	0.041	106	106		0.00													1.001	0.000	0
930	149.040	147.838		0.16	0.16	1.33	1.04		84	84		2.86	1.7	115	0.042	105	105		0.00													1.001	0.000	0
940	150.644	149.429		0.16	0.16	1.32	1.05		84	84		2.84	1.6	80	0.043	101	100		0.00													1.001	0.000	0
950	152.255	151.039		0.16	0.16	1.33	1.07		84	84		2.79	1.6	76	0.043	101	101		0.00													1.001	0.000	0
960	153.868	152.658		0.16	0.16	1.34	1.07		84	84		2.79	1.6	76	0.046	97	98		0.00													1.001	0.000	0
970	155.482	154.277		0.16	0.16	1.33	1.07		84	84		2.8	1.6	76	0.045	99	99		0.00													1.001	0.000	0
980	157.094	155.896		0.16	0.16	1.33	1.07		84	84		2.8	1.6	76	0.043	101	102		0.00													1.001	0.000	0
990	158.707	157.498		0.16	0.16	1.33	1.04		84	84		2.82	1.6	76	0.045	99	98		0.00													1.001	0.000	0
1000	160.319	159.093		0.16	0.16	1.34	1.04		84	84		2.81	1.6	76	0.043	101	100		0.00													1.001	0.000	0
1010	161.935	160.687		0.16	0.16	1.33	1.04		84	84		2.8	1.6	76	0.044	100	99		0.00													1.001	0.000	0
1020	163.550	162.284		0.16	0.16	1.34	1.05		84	84		2.8	1.6	76	0.044	100	99		0.00													1.001	0.000	0
1030	165.165	163.881		0.16	0.16	1.34	1.04		84	84		2.8	1.6	75	0.046	97	97		0.00													1.001	0.000	0
1040	166.781	165.477		0.16	0.16	1.34	1.05		84	84		2.79	1.6	76	0.042	102	101		0.00													1.001	0.000	0
1050	168.396	167.075		0.16	0.16	1.34	1.05		84	84		2.8	1.6	75	0.045	99	98		0.00													1.001	0.000	0
1060	170.011	168.671		0.16	0.16	1.34	1.05		84	84		2.8	1.5	76	0.043	101	100		0.00													1.001	0.000	0
1070	171.622	170.264		0.16	0.16	1.35	1.04		84	84		2.82	1.6	105	0.043	103	103		0.00													1.001	0.000	0
1080	173.228	171.851		0.16	0.16	1.33	1.04		84	84		2.84	1.6	114	0.042	105	104		0.00													1.001	0.000	0
1090	174.830	173.426		0.16	0.16	1.32	1.02		84	84		2.84	1.6	88	0.046	98	97		0.00													1.001	0.000	0
1100	176.440	175.030		0.16	0.16	1.33	1.08		84	84		2.81	1.6	76	0.047	96	96		0.00													1.001	0.000	0
1110	178.051	176.647		0.16	0.16	1.33	1.08		83	84		2.79	1.6	75	0.046	97	98		0.00													1.001	0.000	0

Elapsed Time	Particulate Sampling Data																	Fuel Weight, lb		Flow, gpm		Temperature Data, oF										Stack			
	Gas Meter Cubic Feet (1)	Gas Meter Cubic Feet (2)	Gas Meter Cubic Feet (amb)	Sample Rate, cfm (1)	Sample Rate, cfm (2)	Orifice dH (1)	Orifice dH (2)	Orifice dH (amb)	Meter oF (1)	Meter oF (2)	Meter oF (amb)	Meter Vac. In. Hg. (1)	Meter Vac. In. Hg. (2)	Dilution Tunnel Temp.	Dilution Tunnel dP	Pro. Rate (%) (1)	Pro. Rate (%) (2)	Scale Reading	Weight Change	Load Side Liquid Flow Rate	Boiler Side Liquid Flow Rate (optional)	Thermopile ΔT	Boiler to Heat Exch. Temp.	Heat Exch to Boiler Temp.	Inlet Load Temp.	Outlet Load Temp.	Stack	Filter (1)	Filter (2)	Ambient		Specific Heat of Inlet Water (BTU/lb-°F)	Mass Flow Rate of Inlet Water (lb/min)	Heat Output, Btu
1120	179.663	178.265		0.16	0.16	1.33	1.08		83	84		2.79	1.6	75	0.042	102	103		0.00													1.001	0.000	0
1130	181.269	179.878		0.16	0.16	1.31	1.04		83	84		2.77	1.6	75	0.044	99	100		0.00													1.001	0.000	0
1140	182.869	181.468		0.16	0.16	1.31	1.04		83	84		2.79	1.6	75	0.043	100	100		0.00													1.001	0.000	0
1150	184.470	183.057		0.16	0.16	1.32	1.04		83	84		2.79	1.6	76	0.046	97	96		0.00													1.001	0.000	0
1160	186.070	184.645		0.16	0.16	1.31	1.04		84	84		2.77	1.5	76	0.043	100	100		0.00													1.001	0.000	0
1170	187.671	186.236		0.16	0.16	1.31	1.04		84	84		2.78	1.5	76	0.046	97	97		0.00													1.001	0.000	0
1180	189.273	187.826		0.16	0.16	1.31	1.04		84	84		2.77	1.5	77	0.043	100	100		0.00													1.001	0.000	0
1190	190.873	189.416		0.16	0.16	1.31	1.04		84	84		2.78	1.6	80	0.044	99	99		0.00													1.001	0.000	0
1200	192.476	191.008		0.16	0.16	1.31	1.04		84	85		2.77	1.6	74	0.043	100	100		0.00													1.001	0.000	0
1210	194.079	192.599		0.16	0.16	1.32	1.04		84	85		2.76	1.5	74	0.043	100	100		0.00													1.001	0.000	0
1220	195.682	194.191		0.16	0.16	1.31	1.03		84	85		2.76	1.6	75	0.043	100	100		0.00													1.001	0.000	0
1230	197.281	195.780		0.16	0.16	1.33	1.05		84	84		2.79	1.6	105	0.038	109	109		0.00													1.001	0.000	0
1240	198.875	197.362		0.16	0.16	1.32	1.04		84	84		2.79	1.6	114	0.041	106	105		0.00													1.001	0.000	0
1250	200.471	198.940		0.16	0.16	1.31	1.03		84	84		2.76	1.6	83	0.040	104	103		0.00													1.001	0.000	0
1260	202.070	200.527		0.16	0.16	1.31	1.03		84	85		2.77	1.6	76	0.042	101	101		0.00													1.001	0.000	0
1270	203.671	202.115		0.16	0.16	1.32	1.04		84	85		2.78	1.6	75	0.043	100	99		0.00													1.001	0.000	0
1280	205.273	203.704		0.16	0.16	1.32	1.04		85	85		2.77	1.6	74	0.043	100	99		0.00													1.001	0.000	0
1290	206.873	205.294		0.16	0.16	1.31	1.03		85	85		2.78	1.6	74	0.046	96	96		0.00													1.001	0.000	0
1300	208.476	206.885		0.16	0.16	1.32	1.04		84	85		2.74	1.6	74	0.042	101	101		0.00													1.001	0.000	0
1310	210.077	208.475		0.16	0.16	1.32	1.04		84	85		2.76	1.6	74	0.047	96	95		0.00													1.001	0.000	0
1320	211.680	210.066		0.16	0.16	1.32	1.04		84	85		2.74	1.6	73	0.045	98	97		0.00													1.001	0.000	0
1330	213.284	211.659		0.16	0.16	1.32	1.05		84	84		2.75	1.6	73	0.044	99	99		0.00													1.001	0.000	0
1340	214.889	213.252		0.16	0.16	1.32	1.05		84	84		2.76	1.6	73	0.045	98	98		0.00													1.001	0.000	0
1350	216.492	214.847		0.16	0.16	1.33	1.05		84	84		2.74	1.5	73	0.043	100	100		0.00													1.001	0.000	0
1360	218.098	216.440		0.16	0.16	1.32	1.05		84	84		2.75	1.6	73	0.045	98	98		0.00													1.001	0.000	0
1370	219.700	218.034		0.16	0.16	1.33	1.05		84	84		2.75	1.6	91	0.041	104	104		0.00													1.001	0.000	0
1380	221.298	219.621		0.16	0.16	1.33	1.05		84	84		2.77	1.6	107	0.044	102	101		0.00													1.001	0.000	0
1390	222.892	221.202		0.16	0.16	1.32	1.04		84	84		2.79	1.6	113	0.044	102	101		0.00													1.001	0.000	0
1400	224.490	222.784		0.16	0.16	1.32	1.04		84	84		2.76	1.6	76	0.042	101	101		0.00													1.001	0.000	0
1410	226.090	224.369		0.16	0.16	1.31	1.04		83	84		2.77	1.6	73	0.046	97	96		0.00													1.001	0.000	0
1420	227.692	225.957		0.16	0.16	1.31	1.04		83	84		2.77	1.6	73	0.041	102	102		0.00													1.001	0.000	0
1430	229.293	227.544		0.16	0.16	1.32	1.04		83	83		2.76	1.6	72	0.044	99	98		0.00													1.001	0.000	0
1440	230.894	229.133		0.16	0.16	1.32	1.04		83	83		2.75	1.6	72	0.044	99	98		0.00													1.001	0.000	0
1450	232.495	230.721		0.16	0.16	1.32	1.04		83	83		2.75	1.6	72	0.041	102	102		0.00													1.001	0.000	0
1460	234.097	232.309		0.16	0.16	1.32	1.04		83	83		2.74	1.6	71	0.045	98	97		0.00													1.001	0.000	0
1470	235.700	233.899		0.16	0.16	1.32	1.05		83	83		2.74	1.6	71	0.043	100	100		0.00													1.001	0.000	0
1480	237.307	235.492		0.16	0.16	1.33	1.05		83	83		2.73	1.6	71	0.044	99	99		0.00													1.001	0.000	0
1490	238.913	237.084		0.16	0.16	1.33	1.04		83	83		2.73	1.6	71	0.041	102	102		0.00													1.001	0.000	0
1500	240.454	238.676		0.15	0.16	1.33	1.04		83	83		2.74	1.6	70	0.043	96	100		0.00													1.001	0.000	0
1510	241.778	240.268		0.13	0.16	1.32	1.05		83	83		2.75	1.6	81	0.043	83	101		0.00													1.001	0.000	0
1520	243.338	241.856		0.16	0.16	1.34	1.05		82	83		2.74	1.6	103	0.040	104	106		0.00													1.001	0.000	0
1530	244.558	243.438		0.12	0.16	1.33	1.04		82	83		2.77	1.6	107	0.043	88	103		0.00													1.001	0.000	0
1538	245.834	244.700		0.13	0.13	1.33	1.05		82	82		2.78	1.6	96	0.046	99	98		0.00													1.001	0.000	0
	245.834	244.700	0.000			1.31	1.04	#####	83	83	#####			81	0.044					#DIV/0!	#DIV/0!	#DIV/0!	#DIV/0!	#DIV/0!	#DIV/0!	#DIV/0!		#DIV/0!	#DIV/0!		#DIV/0!				0
																																	TOTAL:	0

TF_{avg}	0.000
TI_{avg}	0.000

Hydronic Heating Appliances - Test Method ASTM 2618
Results

Manufacturer: Central Boiler, Wood Master
Model: Edge 960, CleanFire 900
Tracking No.: 2430
Project No.: 0117WB041E
Run: 4
Test Date: December 21, 2020

Burn Rate	**kg/hr dry**
Average Tunnel Temperature	81 degrees F
Average Gas Velocity in Dilution Tunnel - vs	15.4 feet/second
Average Gas Flow Rate in Dilution Tunnel - Qsd	41931 dscf/hour
Average Delta p	0.044 inches H20
Average Delta H	1.31 inches H20
Total Time of Test	1538 minutes

PARTICULATE EMISSIONS RESULTS

First Hour:	g/hr
	g/kg
	lb/mmBTU output
Complete Run:	g/hr
	g/kg
	lb/mmBTU output

	SAMPLE TRAIN 1	SAMPLE TRAIN 2	AMBIENT SAMPLE TRAIN
Total Sample Volume - Vm	245.83 cubic feet	244.70 cubic feet	0.00 cubic feet
Average Gas Meter Temperature	83 degrees F	83 degrees F	#DIV/0! degrees F
Total Sample Volume (Standard Conditions) - Vmstd	245.2 dscf	240.0 dscf	#DIV/0! dscf
Total Particulates - mn			
Particulate Concentration (dry-standard)			
Particulate Emissions			
Difference from Average			

AVERAGE

Total Sample Volume - Vm	245.27 cubic feet
Average Gas Meter Temperature	83 degrees F
Total Sample Volume (Standard Conditions) - Vmstd	242.6 dscf
Particulate Concentration (dry-standard)	grams/dscf
Particulate Emissions	grams
7.5% of the average particulate emissions	grams

ADDITIONAL ACCEPTANCE CRITERIA

Proportional Rate Variation >80%	**Acceptable**
90% of PR Values between 90-110%	**Acceptable**

SAMPLE TRAIN 1 - FIRST HOUR

Total Sample Volume - Vm	96.19 cubic feet
Average Gas Meter Temperature	82 degrees F
Total Sample Volume (Standard Conditions) - Vmstd	94.77 dscf
Total Particulates - mn	0 mg
Particulate Concentration (dry-standard)	grams/dscf
Particulate Emissions	grams
Burn Rate	(dry kg/hr)
Heat Output Rate	BTU/hr

Section 5

Testing Results

Table 1A - Data Summary Part A

						θ	W_{fuel}	MC_{ave}	Q_{inLHV}	Q_{inHHV}	Q_{out}
Category	Run No	Load % Capacity	Target Load	Actual Load	Actual Load	Test Duration	Wood Weight as-fired	Wood Moisture	Heat Input (LHV)	Heat Input (HHV)	Heat Output
			Btu/hr	Btu/hr	% of max	hrs	lb	% DB	Btu	Btu	Btu
I	3	< 15% of max	<60000	47368	11.8%	51.67	389.5	20.74	2576869	2774295	2447330
II	4	16-24% of max	64000-96000	89966	22.5%	25.63	387.9	21.71	2545913	2740968	2306118
III	2	25-50% of max	100000-200000	189109	47.3%	12.13	390.2	21.22	2571315	2768316	2294524
IV	1	Max capacity	400000	378339	94.6%	6.13	389.8	21.01	2573114	2770253	2320480

Table 1B - Data Summary Part B

			T2 Min	E_T	E	E	$E_{g/hr}$	$E_{g/kg}$	η_{del}	η_{SLM}
Category	Run No	Load % Capacity	Min Return Water Temp.	Total PM Emissions	PM Output Based	PM Output Based	PM Rate	PM Factor	Delivered Efficiency (HHV)	Stack Loss Efficiency (HHV)
			°F	g	lb/MMBtu Out	g/MJ	g/hr	g/kg	%	%
I	3	< 15% of max	155.0	69.5	0.06	0.03	1.3	0.5	88.2	79.1
II	4	16-24% of max	136.0	51.2	0.05	0.02	2.0	0.4	84.1	87.1
III	2	25-50% of max	136.3	70.1	0.07	0.03	5.8	0.5	82.9	84.2
IV	1	Max capacity	129.3	73.4	0.07	0.03	12.0	0.5	83.8	83.7

Table 1C - Hang Tag Information

MANUFACTURER:	Central Boiler		
MODEL NUMBER:	Classic Edge 960		
MAXIMUM OUTPUT RATING	Q_{MAX}	400,000	Btu/hr
ANNUAL EFFICIENCY RATING:	ηavg	85.6%	**(Using higher heating value)**
		92.1%	(Using lower heating value)
PARTICLE EMISSIONS:	E_{avg}	3.3	GRAMS/HR (average)
		0.06	LBS/MILLION Btu OUTPUT
CARBON MONOXIDE:	CO	2.94	GRAMS/MINUTE (average)

Table 2 - Year Round Use Weighting

Category	Weighting Factor (F_i)	$\eta_{del,i} \times F_i$	$E_{g/MJ,i} \times F_i$	$E_{g/kg,i} \times F_i$	$E_{lb/MMBtu\ Out,i} \times F_i$	$E_{g/hr,i} \times F_i$	$CO_{g/min,i} \times F_i$
I	0.437	38.5	0.01	0.21	0.03	0.59	1.584
II	0.238	20.0	0.01	0.08	0.01	0.48	0.591
III	0.275	22.8	0.01	0.13	0.02	1.59	0.667
IV	0.05	4.2	0.00	0.03	0.00	0.60	0.0981
Totals	1	85.6	0.03	0.4	0.06	3.3	2.94

TEST RESULTS AND DISCUSSION

Results
A total of four test runs were performed on the Classic Edge 960, CleanFire 900 boiler. Four test runs were conducted in the following categories based on the manufacturer's rated heat capacity: one in the 15% or less of maximum capacity (category I); one in the 16-24% of capacity (category II); one in the 25-50% of capacity (category III); and one at the manufacturer's rated heat capacity (category IV).

The Classic Edge 960, CleanFire 900 furnace when tested with Maple cordwood meets the 2020 particulate matter emission limit of 0.15 lbs/mmBtu heat output per individual heat output category.

Test Number	Output BTU/Hr.	Particulate Emissions lb/mmBtu Output	Delivered Efficiency (% HHV)
Run 3 / CAT I	47,368	0.06	88.2
Run 4 / CAT II	89,966	0.05	84.1
Run 2 / CAT III	189,109	0.07	82.9
Run 1 / CAT IV	378,339	0.07	83.8

The average Btu/hr for 8-hour burn time was measured to be **319,468 Btu/hr**. The average efficiency for 8-hour burn time was measured to be **83.5%**.

Precision
The precision and accuracy of the emissions and heating efficiency results presented in this report cannot be specified because of the unmeasured variability of results that would occur between identical appliances and fueling protocols. It is estimated, using precision data from similar sampling and measurement methods, that the precision of the results presented in this report are +/- 10 to 12 percentage points of the emissions values and +/- 3 to 4 percentage points of thermal efficiency.

Burn Category	Train A g/hr	Train B g/hr	Train A g/kg	Train B g/kg	Train Precision ≤ 7.5%	Train Precision ± 0.5 g/kg	Overall gram per hour
I	1.409	1.281	0.498	0.452	7.15	0.05	1.34
II	1.976	2.020	0.350	0.358	1.66	0.01	2.00
III	5.96	5.59	0.496	0.465	4.82	0.03	5.78
IV	12.59	11.35	0.529	0.476	7.80	0.50	11.97

One-Hour Filter Discussion
§ 60.5476(c)(6) of 40 CFR 60 states, "For all tests conducted using ASTM 2515–11 [sic]… the manufacturer and approved test laboratory must also measure the first hour of particulate matter emissions for each test run using a separate filter in one of the two parallel trains. The manufacturer and approved test laboratory must report the test results for the first hour separately and also include them in the total particulate matter emissions per run.

Section 6

Example Calculations

Equations and Sample Calculations – Wood-fired Hydronic Heater

Manufacturer:	Central Boiler - WoodMaster
Model:	Edge 960 - CleanFire 900
Run:	3
Category:	I

Equations used to calculate the parameters listed below are described in this appendix. Sample calculations are provided for each equation. The raw data and printout results from a sample run are also provided for comparison to the sample calculations.

BR	Dry burn rate, kg/hr
m_n	Total particulate matter collected, mg
$V_{m(std)}$	Volume of gas sampled corrected to standard conditions, dscf
v_s	Average dilution tunnel gas velocity, ft/sec
C_s	Particulate concentration, g/dscf
Q_{sd}	Dilution tunnel gas flow rate, dscf/min
E	Particulate emission rate, lbs/hr
E_T	Total particulate emissions, grams
MC_{avg}	Average fuel load moisture content, %
PR	Proportional rate variation, %
Q_{in}	Heat input, Btu
Q_{out}	Heat output, Btu
	Heat output rate, Btu/hr
$E_{g/MJ}$	Emission rate, g/MJ
$E_{lb/MMBtu\ input}$	Emission rate, lb/MMBtu input
$E_{lb/MMBtu\ output}$	Emission rate, lb/MMBtu output
$E_{g/kg}$	Emission rate, g/kg
$E_{g/hr}$	Emission rate, g/hr
$E_{g/hr\ 10,000\ BTU}$	Emission rate, g/hr 10,000 Btu
η_{del}	Delivered efficiency, %
E_{avg}, η_{avg}	Weighted average emissions and efficiency, g/kg, %
	Average Btu/hr for 8 hour burn time, Btu/hr

BR – Dry Burn Rate, kg/hr

$$BR = \frac{60 \times W_{wd}}{\theta} \times \frac{100 - \%M_w}{100}$$

Where,

BR	=	Dry burn rate, kg/hr
W_{wd}	=	Mass of wood burned (wet basis) during test run, lb
θ	=	Total time of test run, minutes
$\%M_w$	=	Average moisture content of test fuel charge, wet basis percent

Sample Calculation:

Using the equation 28-2 for converting dry basis moisture to wet basis moisture,

$$\%M_w = \frac{\%M_D \times 100}{\%M_D + 100}$$

$$\%M_W = \frac{20.74 \text{ x } 100}{20.74 + 100}$$

$\%M_W$ = 17.18 %

W_{wd} = 389.5 lbs

W_{wd} = 389.5 x 0.4536 kg/lb

W_{wd} = 176.7 kg

$$BR = \frac{60 \text{ x } 176.7}{3100} \text{ x } \frac{100 - 17.18}{100}$$

BR = 2.83 kg/hr

m_n – Total Particulate Matter Collected, mg
ASTM E2515 Equation (12)

$$m_n = m_p + m_f + m_g$$

Where:

m_n = Total particulate matter collected, mg
m_p = Particulate matter from probe, mg
m_f = Particulate matter from filters, mg
m_g = Particulate matter from filter seals, mg

Sample Calculation:

Using equation for Train 1 (first-hour):

m_n = 0.6 + 3.3 + 1.8

m_n = 5.7 mg

Using equation for Train 1(Post First Hour Change-out):

m_n = 1.7 + 8.7 + 1.5

m_n = 11.9 mg

Train 1 Aggregate:

m_n = 5.7 + 11.9

m_n = 17.6 mg

Using equation for Train 2:

m_n = 2.3 + 10.0 + 3.4

m_n = 15.7 mg

$V_{m(std)}$ – Volume of Gas Sampled Corrected to Dry Standard Conditions, dscf
ASTM E2515 equation (6)

$$V_{m(std)} = V_m \times Y \times K_1 \times \frac{(P_b + \frac{\Delta H}{13.6})}{T_m}$$

Where:

K_1	=	17.64 °R/in. Hg
V_m	=	Volume of gas sample measured at the dry gas meter, dcf
Y	=	Dry gas meter calibration factor, dimensionless
P_b	=	Barometric pressure at the testing site, in. Hg
ΔH	=	Average pressure differential across the orifice meter, in. H_2O
T_m	=	Absolute average dry gas meter temperature, °R

Sample Calculation:

Using equation for Train 1:

$$V_{m(std)} = \frac{495.17 \times 1.013 \times 17.64 \times (30.13 + \frac{1.30}{13.6})}{(82.84 + 460)}$$

$V_{m(std)}$ = 492.73 ft3

Using equation for Train 2:

$$V_{m(std)} = \frac{494.19 \times 0.997 \times 17.64 \times (30.13 + \frac{1.04}{13.6})}{(83.3 + 460)}$$

$V_{m(std)}$ = 483.27 ft3

Using equation for ambient train:

$$V_{m(std)} = \frac{976.61 \times 0.970 \times 17.64 \times (30.13 + \frac{0.36}{13.6})}{(70.63 + 460)}$$

$V_{m(std)}$ = 949.79 ft3

Using equation for First Hour Train:

$$V_{m(std)} = \frac{9.553 \times 1.013 \times 17.64 \times (30.30 + \frac{1.34}{13.6})}{(75 + 460)}$$

$V_{m(std)}$ = 9.707 ft3

v_s – Dilution Tunnel Gas Velocity, ft/sec
ASTM E2515 equation (7)

$$v_s = F_P \times k_p \times C_p \times (\sqrt{\Delta P})_{avg} \times \sqrt{\frac{T_{s(avg)}}{P_s \times M_s}}$$

Where:

F_p = Adjustment factor for center of tunnel pitot tube placement, $Fp = \frac{V_{strav}}{V_{scent}}$, ASTM E2515 Equation (1)

v_{scent} = Dilution tunnel velocity calculated after the multi-point pitot traverse at the center, ft/sec

v_{strav} = Dilution tunnel velocity calculated after the multi-point pitot traverse, ft/sec

k_p = Pitot tube constant, $85.49 \frac{ft}{\sec}\left[\frac{(lb/lb-mole)\times(inches Hg)}{(R)\times(inches H_2O)}\right]^{1/2}$

C_p = Pitot tube coefficient: 0.99, unitless

ΔP* = Velocity pressure in the dilution tunnel, in H_2O

T_s = Absolute average gas temperature in the dilution tunnel, °R; (°R = °F + 460)

P_s = Absolute average gas static pressure in diltuion tunnel, = $P_{bar} + P_g$, in Hg

P_{bar} = Barometric pressure at test site, in. Hg

P_g = Static pressure of tunnel, in. H_20; (in Hg = in H_20/13.6)

M_s = **The dilution tunnel wet molecular weight; M_s = 28.78 assuming a dry weight of 29 lb/lb-mole

Sample calculation:

$$M_s = 29 \times (1 - 0.02) + 18.0 \times 0.02 = 28.78$$

$$V_s = \frac{1.045}{} \times 85.49 \times \frac{0.99}{} \times \frac{0.208}{} \times \left(\frac{\frac{78.398}{} + 460}{\left(\frac{30.133}{} + \frac{-0.5}{13.6} \right) \times 28.78} \right)^{1/2}$$

V_s = 14.52 ft/s

*The ASTM test standard mistakenly has the square root of the average delta p instead of the average of the square root of delta p. The current EPA Method 2 is also incorrect. This was verified by Mike Toney at EPA.

**The ASTM test standard mistakenly identifies Ms as the dry molecular weight. It should be the wet molecular weight as indicated in EPA Method 2.

C_s – Particulate Concentration, g/dscf
ASTM E2515 equation (13)

$$C_s = K_2 \times \frac{m_n}{V_{m(std)}}$$

Where:

K_2	=	Constant, 0.001 g/mg
C_s	=	Concentration of particulate matter in stack gas, dry basis, corrected to standard conditions, g/dscf
m_n	=	Total mass of particulate matter collected in the sampling train, mg
$V_{m(std)}$	=	Volume of gas sampled corrected to dry standard conditions, dscf

Sample calculation:

For Train 1:

$$C_s = 0.001 \times \frac{17.6}{492.73}$$

C_s = 0.000036 g/dscf

For Train 2

$$C_s = 0.001 \times \frac{15.7}{483.27}$$

C_s = 0.000032 g/dscf

For Ambient Train

$$C_s = 0.001 \times \frac{0.2}{949.79}$$

C_s = 0.000000 g/dscf

For First Hour Train:

$$C_s = 0.001 \times \frac{5.7}{9.71}$$

C_s = 0.000587 g/dscf

Q_{sd} – Average Dilution Tunnel Gas Flow Rate, dscf/hr
ASTM equation (3)

$$Q_{sd} = 3600 \times (1 - B_{ws}) \times v_s \times A \times \frac{T_{std}}{T_{s(avg)}} \times \frac{P_s}{P_{std}}$$

Where:

Q_{sd}	=	Gas flow rate corrected to dry, standard conditions, dscf/hr
3600	=	Conversion from seconds to hours (ASTM method uses 60 to convert in minutes)
B_{ws}	=	Moisture content of dilution tunnel gas, ratio; assume 2%
v_s	=	Average dilution tunnel gas velocity, ft/sec
A	=	Cross sectional area of dilution tunnel, ft^2
T_{std}	=	Standard absolute temperature, 528 °R
$T_{s(avg)}$	=	Average absolute dilution tunnel temperature, °R, (°R = °F + 460)
P_b	=	Barometric pressure at test site, in. Hg
P_g	=	Dilution tunnel static pressure, in. Hg
P_s	=	Absolute dilution tunnel gas pressure, in Hg, (Hg = P_b + P_g)
P_{std}	=	Standard absolute pressure, 29.92 in Hg

Sample calculation:

$$Q_{sd} = 3600 \times (1 - 0.02) \times \underline{14.52} \times \underline{0.785} \times \frac{528}{\underline{78.4} + 460} \times \frac{\underline{30.133} + \frac{\underline{-0.496}}{13.6}}{29.92}$$

Q_{sd} = <u>39679.95</u> dscf/hr

E, E_T – Particulate Emissions
ASTM E2515 equation (15) section

$$E_T = (c_s - c_r) \times Q_{std} \times \theta$$

Where:

E_T	=	Particulate emissions, g
C_s	=	Concentration of particulate matter in the stack, g/dscf
C_r	=	Concentration of ambient particulate matter, g/dscf
Q_{std}	=	Average dilution tunnel gas flow rate, dscf/hr
θ	=	Total time of test run, minutes

Sample calculation:

For Train 1

E_T = (0.000036 - 0.000000) x 39679.95 x 3100 /60

E_T = 72.80 g

For Train 2

E_T = (0.000032 - 0.000000) x 39679.9 x 3100 /60

E_T = 66.17 g

Average

E = 69.48 g

For First Hour Train

E_T = (0.000587 - 0.000000) x 39679.95 x 60 /60

E_T = 23.29 g

Total emission values shall not differ by more than 7.5% from the total average emissions

7.5% of the average =	5.21
Train 1 difference =	3.31
Train 2 difference =	3.31

MC_{avg} – Average Fuel Load Moisture Content, %

Where:

$$MC_{avg} = \left[\left[\sum W_i \times MC_i\right]\right] \div W_{fuel}$$

W_i = Weight of individual fuel pieces, lbs

MC_i = Average moisture of individual fuel pieces, % dry

Sample calculation:

MC_{avg} = (9.5 x 19.6 + 8.9 x 21.1 + 9.2 x 22.1 +
9.4 x 21.2 + 10.8 x 20.4 + 9.4 x 19.8 +
11.7 x 19.2 + 11.6 x 19.9 + 10.8 x 19.3 +
. . . + (389.5 - 389.5) x 10) / 389.5

MC_{avg} = 16.46 %

PR - Proportional Rate Variation
ASTM E2515 equation (16)

$$PR = \left[\frac{\theta \times V_{mi} \times V_s \times T_m \times T_{si}}{\theta_i \times V_m \times V_{si} \times T_{mi} \times T_s} \right] \times 100$$

Where:

θ = Time of test, min

θ_i = Time of interval, 1 min

V_{mi} = Volume of gas sample measured by the dry gas meter during the “ith” time interval, dscf

V_m = Volume of gas sample as measured by dry gas meter, dscf

V_{si} = Average gas velocity in the dilution tunnel during the "ith" time interval, m/sec

V_s = Average gas velocity in the dilution tunnel, m/sec

T_{mi} = Average dry gas meter temperature during the "ith" time interval, ^oR

T_m = Average dry gas meter temperature, ^oR

T_{si} = Average gas temperature in the dilution tunnel during the "ith" time interval, ^oR

T_s = Average gas temperature in the dilution tunnel, ^oR

Sample calculation (for the first 10 minute interval of Train 1):

$$PR = \left(\frac{3100 \times 0.174 \times 14.52 \times (82.84 + 460) \times (73.0 + 460)}{1 \times 495.2 \times 15.05 \times (72.00 + 460) \times (78.4 + 460)} \right) \times 100$$

PR = 106.2 %

Q_{in} – Heat Input, Btu

$$Q_{in} = (W_{fuel} / (1 + (MC / 100))) \times HV$$

Where:

W_{fuel} = Fuel charge weight, lbs

MC = Moisture content, %

HHV = Higher heating value, 8600 Btu/lb

LHV = Lower heating value, 7988 Btu/lb

Sample calculation:

For the Higher heating value

Q_{in} = (389.5 / (1 + (20.7 /100))) x 8600

Q_{in} = 2774295 Btu

For the Lower heating value

Q_{in} = (389.5 / (1 + (20.7 /100))) x 7988

Q_{in} = 2576869 Btu

Q_{out} – Heat Output, Btu

$$Q_{out} = \left|\sum(C_p \times \Delta T \times M \times t)\right| + (W_{app} \times C_{steel} + C_P \times W_{water}) \times (TF_{avg} - TI_{avg})$$

$$M = V_f \times \sigma$$

$$\sigma = (62.56 + (-0.0003413 \times T_{3i}) + (-0.00006225 \times T_{3i}^2)) \times 0.1337$$

$$C_P = 1.0014 + (-0.000003485 \times T_{3i})$$

Where:

C_p	=	*Heat capacity of water, Btu/lb-°F
C_{steel}	=	Heat capacity of steel, 0.1 Btu/lb-°F
ΔT	=	Load Side thermopile reading, °F
M	=	Mass flow rate of water, lb/min
t	=	Elapsed time, 1 min
W_{app}	=	Weight of appliance, lbs
W_{water}	=	Weight of water, lbs
TF_{avg}	=	Final average temperature of appliance and water, °F
TI_{avg}	=	Initial average temperature of appliance and water, °F
T_{avg}	=	Average temperature of water in the load side, °F
T_{3i}	=	Load inlet temperature at interval i, °F
V_f	=	Volumetric flow rate of water, gal/min
σ	=	Density of water, lb/gal

Sample calculation, For the first 1 minute period: :

C_p = 1.0014 + (-0.000003485 x 55.29)

C_p = 1.001 Btu/lb°F

σ = (62.56+(-0.0003413 x 55.29) + (-0.00006225 x 55.3 ^{2})) x 0.1337

σ = 8.34

M = 0.90 x 8.34

M = 7.48 lbs/min

C_p x ΔT x M x t = 1.001 x 107.2 x 7.48 x 1

C_p x ΔT x M x t = 803 Btu

Total Sum for Run 1:

$\left|\sum(C_p \times \Delta T \times M \times t)\right|$ = 2455660 Btu

Q_{out} for Run 1:

Q_{out} = 2455660 + (2714 x 0.1 + 1.001 x 3425) x (158.41 - 160.66)

Q_{out} = 2447330 Btu

Heat Output Rate, Btu/hr

$$Heat\ \ output\ \ \ rate\ = Q_{out}\ / test\ \ duration$$

Sample calculation:

Heat output rate = 2447330 / (3100 / 60)

Heat output rate = 47368 Btu/hr

Emission Rates, g/MJ, lb/MMBTU, g/kg, g/hr

$$E_{g/MJ} = E_T / (Q_{out} \times 0.001055)$$

$$E_{lb/MMBtu\ input} = (E_T / 453.59) / (Q_{input} \times 10^{-6})$$

$$E_{lb/MMBtu\ output} = (E_T / 453.59) / (Q_{output} \times 10^{-6})$$

$$E_{g/kg} = E_T / (W_{fuel} / (1 + MC / 100))$$

$$E_{g/hr} = E_T / Test\ Duration$$

$$E_{g/hr\ 10{,}000Btu} = \frac{E_T}{(Test\ Duration \times (Q_{out} / 10{,}000))}$$

Sample calculation:

$E_{g/MJ}$ = 69.48 / (2447330 x 0.001055)

$E_{g/MJ}$ = 0.0269 g/MJ

Using higher heat value

$E_{lb/MMBtu\ input}$ = (69.48 / 453.59)/(2774295 x 10^{-6})

$E_{lb/MMBtu\ input}$ = 0.055 lb/MMBtu input

Using lower heat value

$E_{lb/MMBtu\ input}$ = (69.48 / 453.59)/(2576869 x 10^{-6})

$E_{lb/MMBtu\ input}$ = 0.059 lb/MMBtu input

$E_{lb/MMBtu\ output}$ = (69.48 / 453.59)/(2447330 x 10^{-6})

$E_{lb/MMBtu\ output}$ = 0.063 lb/MMBtu output

$E_{g/kg}$ = 69.48 /((389.5 x 0.4536) / (1 + 20.7 /100))

$E_{g/kg}$ = 0.475 g/kg

$E_{g/hr}$ = 69.48 / (3100 / 60)

$E_{g/hr}$ = 1.34 g/hr

$$E_{g/hr\ 10{,}000\ Btu} = \frac{69.48}{((3100 / 60) \times (2447330 / 10{,}000))}$$

$E_{g/hr\ 10{,}000\ Btu}$ = 0.01 g/hr 10,000 Btu

First hour emissions:

$E_{g/kg}$ = 23.29 /((45.564 x 0.4536) / (1 + 20.7 /100))

$E_{g/kg}$ = 1.361 g/kg

$E_{g/hr}$ = 23.29 / (60 / 60)

η_{del} – Delivered Efficiency, %

$$\eta_{del} = (Q_{out} / Q_{in}) \times 100$$

$$\eta_{delLHV} = (Q_{out} / Q_{inLHV}) \times 100$$

Sample calculation:

η_{del} = (2447330 / 2774295) x 100

η_{del} = 88.21 %

η_{delLHV} = (2447330 / 2576869) x 100

η_{delLHV} = 94.97 %

E_{avg}, η_{avg} – Weighted Average Emissions and Efficiency, g/kg, %

$$E_{avg} = \sum E_i \times F_i$$

$$\eta_{avg} = \sum \eta_i \times F_i$$

Sample calculation for emissions (g/kg) seasonal use and lower heating value:

E_{avg}= 0.47 x 0.175 + 0.35 x 0.275 + 0.48 x 0.450 + 0.50 x 0.100

E_{avg}= 0.4 g/kg

Sample calculation for efficiency year round use and high heating value:

η_{avg}= 88.21 x 0.437 + 84.14 x 0.238 + 82.89 x 0.275 + 83.76 x 0.050

η_{avg}= 85.6 %

Average Btu/hr for 8 Hour Burn Time, Btu/hr

$$\frac{Btu}{hr} = X1 + \{(8 - Y1) \times [(X2 - X1)/(Y2 - Y1)]\}$$

Where:

Y1	=	Test duration just above 8 hours
Y2	=	Test duration just below 8 hours
X1	=	Actual load for duration Y1
X2	=	Actual load for duration Y2

Sample calculation:

Btu/hr = 189109 + {(8 - 12.1) x [(378339 - 189109) / (6.13333 - 12.13)]}

Btu/hr = 319468 for 8 hour burn time

Appendix A

Firebox Volume

UNCONTROLLED DOCUMENT IF PRINTED

B Davis
0-72

	H	W	D	Ft 3
V_1 =	26.75	x 31.5	x 42.75	= 20.846
V_2 =	11.87	x 31.5	x 40.0	= 8.6552
V_3 =	5.0	x 24.5	x 40.0	= 2.4356
				32.336
V_4 =	3.0	x 2.50	x 31.5	= - 0.1367
				32.1993 ft³

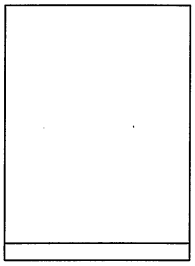

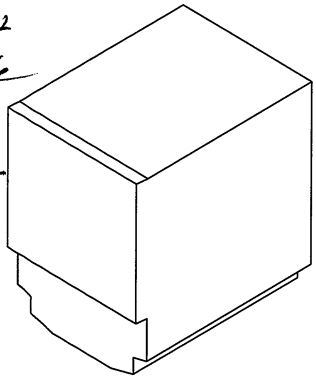

Firebox Volume: 32 Cu Ft

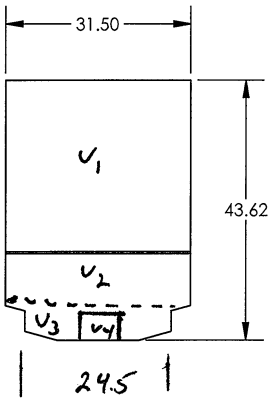

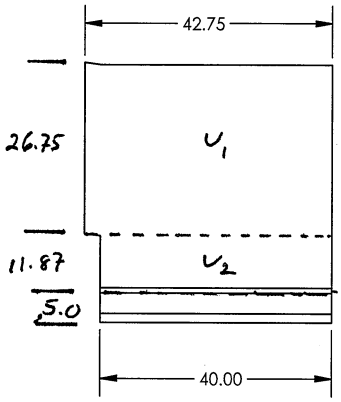

IN DESIGN

ALL BENDS 90° UNLESS NOTED

PROPRIETARY AND CONFIDENTIAL
THE INFORMATION CONTAINED IN THIS DRAWING IS THE SOLE PROPERTY OF CENTRAL BOILER. ANY REPRODUCTION IN PART OR AS A WHOLE WITHOUT THE WRITTEN PERMISSION OF CENTRAL BOILER IS PROHIBITED.

UNLESS OTHERWISE SPECIFIED:
DIMENSIONS ARE IN INCHES
TOLERANCES:
ANGULAR: MACH ±1° BEND ±1°
TWO PLACE DECIMAL ±.06"
THREE PLACE DECIMAL ±.031"
INTERPRET GEOMETRIC TOLERANCING PER: ASME Y14.5-2009
MATERIAL: N/A
FINISH:
SURFACE AREA: 8792.666
APPLICATION
DO NOT SCALE DRAWING

	NAME	DATE
DRAWN	JD	11/20
CHECKED		
ENG APPR.		
MFG APPR.		
Q.A.		

COMMENTS:
Print Date:1/14/2021

CENTRAL BOILER
TITLE: CE960 FB Volume
SIZE A | DWG. NO. | REV
SCALE: 1:24 | WEIGHT: 15581.775 | SHEET 1 OF 1

Appendix B

Revision History

Date	Project No.	Tech. & Evaluator	Report Sect.	Summary of Changes
2/17/21	0117WB041E	Bruce Davis	All	Original report was generated.
11/2/21	0117WB041E Edition 001	Bruce Davis	Section 5	Train precision data added to page 542.
			Appendix A	Firebox volume calculations added to page 561.
			Appendix B	Added revision history.

Wed 12/15/2021 3:44 PM

Sanchez, Rafael <Sanchez.Rafael@epa.gov>

RE: Central Boiler Incorporated's Application for a Certificate of Compliance for the Classic Edge 960 and CleanFire 900 Hydronic Heater Models

To Mark Reese

Cc Dennis Brazier; Janie Brandon; Scinta, Robert; Johnson, Steffan; Brashear, Angelina

This message was sent with High importance.

Mr. Reese,

We are in receipt of your October 6, 2021 letter concerning our September 1, 2021 review of the Classic Edge 960 and CleanFire 900 Hydronic Heater Models test report and supporting documentation. As indicated in our September 1 letter, the Environmental Protection Agency (EPA) reviewed your application for the above-referenced models and found that the certification test was not conducted in accordance with the 2015 Wood Heater Rule and applicable test method.

Primary Identified Problem or Irregularity

Specifically, we found the certification test was not compliant with the sampling train leak check requirements prescribed by the American Society for Testing and Materials (ASTM) test method E2515. As required by ASTM test method E2515 section 9.6.5.1, *"a leak check of the sampling train is mandatory at the conclusion of each sampling run before sample recovery."* In addition, our review also found the following test report irregularities:

Additional Problems or Irregularities

- Missing Documentation – Dual Train Comparison. ASTM E2515 Section 11.7.
- Missing - Firebox Volume Calculation Data. 40 CFR § 60.5475 (b)(5).

As a result of the above-identified problems/irregularities, the EPA found both the certification test and the Certification of Conformity invalid. In our September 1 letter, we had provided you with the opportunity to conduct a valid certification test in accordance with the applicable test method and an opportunity to confer with the Agency. As a result, subsequent conference calls were held on September 22 and October 27, 2021.

After reviewing your October 6, 2021 letter and consultation with the Office of Air Quality Planning and Standards (OAQPS), we accept your reasoning concerning compliance with the ASTM E2515 (Primary Identified Problem or Irregularity). Please note that you must address satisfactorily the irregularities listed under "Additional Problems or Irregularities" to continue with our review.

Finally, we received your revised test report dated February 17, 2021 (revised on November 2, 2021), which we are currently reviewing. If the EPA certifies the above-referenced models, a copy of this email must be included in the test report when uploaded on the manufacturer's website. If you have any questions, please let me know.

Rafael Sanchez, Ph.D.
Wood Heater Program Manager
Air Branch
Monitoring, Assistance, and Media Programs Division
Office of Compliance
U.S. Environmental Protection Agency (EPA)
Room 7149-D
1200 Pennsylvania Ave., NW
MS:2227A
Washington, DC 20460
Ph. 202-564-7028
Teleworking on Mondays, Wednesdays, and Fridays, ph. 703-389-6568

Questions about Wood Heaters or Certifications? Please send them to WoodHeaterReports@epa.gov

Are you looking for a wood heater or central heater? Please try our fully searchable EPA Certified Wood Heater Database (https://www.epa.gov/compliance/epa-certified-wood-heater-database).